2012-17

CROSS ROADS/ HARD-BALL / CROSS COUNTRY/ MAGNUM

SERVICE MANUAL

9927627 R01

2012 – 2017 Cross Roads, Hard-Ball, Cross Country, Magnum

Service Manual

Chapter Summary

CHAPTER 1: GENERAL

CHAPTER 2: MAINTENANCE

CHAPTER 3: FRAME / BODY / EXHAUST

CHAPTER 4: LUBRICATION / COOLING

CHAPTER 5: FUEL SYSTEM / FUEL INJECTION

CHAPTER 6: ENGINE REMOVAL / INSTALLATION

CHAPTER 7: CYLINDER HEAD / VALVES

CHAPTER 8: CYLINDER / PISTON

CHAPTER 9: CLUTCH, PRIMARY / SHIFT

CHAPTER 10: TRANSMISSION / CRANKSHAFT

CHAPTER 11: DRIVE LINE

CHAPTER 12: FRONT WHEEL / SUSPENSION

CHAPTER 13: REAR WHEEL / SUSPENSION

CHAPTER 14: TIRES

CHAPTER 15: BRAKES

CHAPTER 16: CHARGING SYSTEM

CHAPTER 17: IGNITION SYSTEM / BATTERY

CHAPTER 18: ELECTRIC STARTER

CHAPTER 19: LIGHTING / INSTRUMENTATION

CHAPTER 1
GENERAL

1

GENERAL INFORMATION 1.5
SERVICE RULES 1.5
VEHICLE INFORMATION 1.6
MODEL NUMBER DESIGNATION 1.6
VEHICLE IDENTIFICATION NUMBER (VIN) DESIGNATION 1.7
VIN NUMBER / MANUFACTURER LABEL 1.7
VECI / NECI / TIRE INFORMATION LABELS 1.7
ENGINE NUMBER LOCATION 1.8
KEY IDENTIFICATION NUMBER 1.8
SADDLEBAG WARNING LABEL 1.8
REAR SHOCK AIR PRESSURE LABEL 1.8
GENERAL SPECIFICATIONS 1.9
2012-2017 CROSS COUNTRY / CROSS COUNTRY TOUR / 8–BALL SPECIFICATIONS 1.9
2015–2017 VICTORY MAGNUM / MAGNUM X-1 ..... 1.11
VEHICLE LOADING 1.13
GROSS VEHICLE WEIGHT RATING (GVWR) 1.13
PUBLICATIONS / TECHNICAL LITERATURE 1.14
PUBLICATION PART NUMBERS 1.14
REFINISHING 1.15
PAINT COLORS BY MODEL 1.15
PAINT COLOR CODES 1.17
BREAK IN PERIOD 1.19
BREAK-IN PROCEDURE 1.19
EMISSIONS 1.20
EMISSION CONTROL SYSTEMS 1.20
EMISSION SOURCES 1.20
EXHAUST EMISSION CONTROL 1.20
NOISE EMISSION CONTROL SYSTEM 1.20
CRANKCASE EMISSION CONTROL 1.20
EVAPORATIVE EMISSION CONTROL 1.21
SPECIAL SERVICE TOOLS 1.22
GENERAL / PRECISION MEASURING TOOLS 1.22
TUNE UP & MAINTENANCE TOOLS 1.23
ELECTRICAL TOOLS 1.23
ENGINE, CLUTCH, & TRANSMISSION TOOLS 1.24
STEERING & SUSPENSION TOOLS 1.25
WHEEL & TIRE 1.25
FUEL SYSTEM & FUEL INJECTION 1.26
TOOL ORDERING INFORMATION 1.26
TRANSPORTING, ELEVATING, AND SECURING THE MOTORCYCLE 1.27
GENERAL GUIDELINES 1.27
KEY SWITCH 1.28

IGNITION KEY 1.28
IGNITION SWITCH 1.28
SPEEDOMETER / INSTRUMENTS - CROSS ROADS 1.29
SPEEDOMETER 1.29
MULTI-FUNCTION DISPLAY (MFD) 1.29
SPEEDOMETER GEAR POSITION INDICATOR 1.29
INSTRUMENT CLUSTER 1.30
SPEEDOMETER / INSTRUMENTS - CROSS COUNTRY / MAGNUM 1.32
INSTRUMENT CLUSTER 1.32
MULTI FUNCTION DISPLAY (MFD) 1.33
ENGINE ERROR CODES 1.34
CLOCK 1.34
TRIP METER OPERATION 1.34
GEAR POSITION INDICATOR 1.34
ODOMETER 1.35
TEMPERATURE 1.35
CHANGING INFORMATION DISPLAY UNITS 1.35
CONSOLE SWITCHES (CROSS COUNTRY) 1.36
HAND GRIP HEATER SWITCH 1.36
SEAT HEATER SWITCH (CROSS COUNTRY TOUR) 1.36
LEFT HANDLEBAR SWITCHES 1.37
MODE BUTTON 1.37
HAZARD SWITCH (EMERGENCY FLASHERS) 1.37
HEADLAMP HIGH / LOW BEAM SWITCH 1.37
TURN SIGNAL SWITCH 1.38
TURN SIGNAL MOMENTARY FEATURE 1.38
STARTER INTERLOCK 1.38
RIGHT HANDLEBAR CONTROLS 1.39
ENGINE STOP SWITCH 1.39
ENGINE STARTER BUTTON 1.39
FRONT BRAKE LEVER REACH ADJUSTMENT (IF EQUIPPED) 1.39
AUDIO / COM / CRUISE CONTROL BUTTONS 1.39
AUDIO SYSTEM - CROSS COUNTRY / CROSS COUNTRY TOUR 1.40
RADIO / AUDIO SYSTEMS OPERATION 1.40
SOFTWARE UPDATES 1.40
RADIO FREQUENCIES 1.40
AUDIO CONTROLS 1.40
LOWER LEFT HAND CONTROL 1.40
UPPER LEFT HAND CONTROL* 1.40
PASSENGER CB CONTROLS 1.41
AUDIO SYSTEM POWER 1.41
AUDIO VOLUME CONTROL 1.41
AUDIO SOURCE SELECTION 1.42
FM SOURCE ACTIVE 1.42
AM SOURCE ACTIVE 1.42
WX (WEATHER) SOURCE ACTIVE 1.42
NAV MP3 SOURCE ACTIVE 1.42

IPOD SOURCE ACTIVE 1.42
AUX SOURCE ACTIVE 1.42
SIRIUSXM RADIO SOURCE ACTIVE 1.42
MW (MEDIUM WAVE) SOURCE 1.43
LW (LONG WAVE) SOURCE 1.43
AUDIO TUNING 1.43
MEMORY PRESETS 1.43
AUDIO MODE MENUS 1.43
BASS SETTING MODE 1.44
TREBLE SETTING MODE 1.44
FADER SETTING MODE 1.44
EXTERNAL SPEAKERS MODE 1.44
AUTOMATIC VOLUME CONTROL (AVC) MODE 1.44
CB HEADSET VOLUME CONTROLS MODE (IF EQUIPPED) 1.45
CB HEADSET ENT MODE (IF EQUIPPED) 1.45
DRIVER ICOM VOLUME MODE 1.45
DRIVER CB VOLUME MODE 1.45
CB LO/DX MODE 1.45
RADIO DATA SYSTEM (RDS) MODE 1.45
AUX MODE 1.45
SIRIUSXM DISPLAY MODE* 1.46
SIRIUSXM CATEGORY MODE* 1.46
NOAA WEATHER BAND (WX) 1.46
CB RADIO / ICOM SYSTEM 1.47
INTRODUCTION - CB RADIO FCC RULES 1.47
HEADSET USE 1.47
GETTING STARTED - CB / ICOM 1.47
CB CHANNELS 1.47
PUSH-TO-TALK (PTT) 1.48
SQUELCH 1.48
CB RADIO VOLUME SETTING (DRIVER) 1.48
CB RADIO VOLUME SETTING (PASSENGER) 1.48
CB LO/DX 1.49
CB FREQUENCIES 1.49
ICOM SYSTEM 1.49
VOX BREAK SETTING 1.49
ICOM VOLUME SETTING (DRIVER) 1.50
ICOM VOLUME SETTING (PASSENGER) 1.50
AUX / IPOD 1.50
INPUT CABLE SETUP 1.50
IPOD USE 1.50
IPOD PLAY LISTS 1.51
IPOD SONG CONTROL 1.52
XM RADIO 1.53
ABOUT SIRIUSXM RADIO 1.53
GETTING STARTED - SIRIUSXM RADIO 1.53
SIRIUSXM RADIO RECEPTION 1.53

SIRIUSXM RADIO MENU OPTIONS 1.53
SIRIUSXM RADIO SETTINGS 1.53
SIRIUSXM CATEGORY SELECTION 1.54
SIRIUSXM CHANNEL SELECTION 1.54
SIRIUSXM RADIO WIRING DIAGRAM 1.55
NAV MP3 ..... 1.56
BEFORE YOU BEGIN - NAV MP3 ..... 1.56
TIPS FOR NAV MP3 OPERATION 1.56
GETTING STARTED - NAV MP3 ..... 1.56
AUDIO SYSTEM - CROSS COUNTRY 8–BALL 1.57
AUDIO SYSTEM INTRODUCTION (8-BALL) 1.57
USING THE GLOBAL POSITIONING SYSTEM (GPS) INTERFACE 1.57
AUDIO CONTROLS (8-BALL) 1.57
AUDIO SYSTEM - MAGNUM / MAGNUM X-1 ..... 1.58
AUDIO SYSTEM INTRODUCTION 1.58
IPOD / IPHONE DEVICE COMPATIBILITY 1.58
RADIO FREQUENCIES 1.58
RADIO SOURCES 1.58
AUDIO MENU OPTIONS 1.59
AUDIO CONTROLS 1.59
AUDIO DISPLAY 1.60
USB CONNECTOR 1.60
AUDIO DISPLAY ZONES 1.60
AUDIO SYSTEM POWER 1.60
AUDIO SYSTEM VOLUME 1.61
MUTE/PUSH-TO-TALK (PTT) 1.61
LOW VOLTAGE MUTE 1.61
SELECTING AUDIO SOURCES 1.61
VOICE RECOGNITION MODE 1.67
SIRI EYES FREE 1.67
AUDIO MODE MENUS 1.67
AUDIO SYSTEM DIAGNOSTICS 1.72
AUDIO COMPLIANCE INFORMATION 1.72
REFERENCE 1.74
SAE TAP / DRILL SIZES 1.74
METRIC TAP / DRILL SIZES 1.74
DECIMAL EQUIVALENTS 1.75
CONVERSION TABLE 1.76
FAHRENHEIT TO CELSIUS 1.77

GENERAL INFORMATION

SERVICE RULES

In order to perform service work efficiently and prevent costly errors, technicians should read the text in this manual and familiarize themselves with the procedures before beginning. Notes, Cautions and Warnings have been included for clarification of text and safety concerns. Knowledge of mechanical theory, tool use and shop procedures are necessary to perform some procedures in this manual safely and correctly.

Use only genuine Victory service parts, including fasteners that require replacement if removed. Do NOT substitute fasteners or hardware.

Cleanliness of parts and tools as well as the work area is of primary importance. Dirt and foreign matter will cause damage to precision parts. Clean the motorcycle before beginning service. Clean all parts before installing.

If difficulty is encountered in removing or installing a component, look to see if a cause for the difficulty can be found. If it is necessary to tap the part into place, use a soft face hammer and tap lightly.

Always follow torque specifications as outlined throughout this manual. Incorrect torquing may lead to serious machine damage or in the case of steering, driveline, and chassis components, can result in loss of control during operation of the motorcycle, which may result in severe personal injury or death.

If a torquing sequence is indicated for nuts, bolts or screws of a certain component, start all fasteners and hand tighten. Following the method and sequence indicated, tighten evenly to the specified torque value. When removing nuts, bolts or screws from a component with several fasteners, loosen them all about 1/4 turn before removing them to prevent distortion of that component.

Replace all oil seals, sealing washers, gaskets, and O-rings with new ones during assembly. Be sure the mating surfaces for the gasket are clean and smooth to avoid leaks and maintain specified tolerances.

Some procedures require removal of retaining rings or clips. Removal can weaken and deform these parts, therefore, they should always be replaced with new parts. When installing new retaining rings and clips, use care not to expand or compress them beyond what is required for installation.

Victory lubricants and greases have been specially formulated to provide maximum performance and protection when applied properly. In some applications, warranty coverage may be void if improper lubricants are used.

Parts requiring grease should be cleaned thoroughly and fresh grease applied before reassembly. Deteriorating grease loses lubricity and may contain abrasive foreign matter. Always replace locking hardware such as lock nuts or lock washers, fasteners that have pre-applied locking agent, or any other fasteners as noted in this service manual with genuine Victory hardware from an authorized Victory dealer. Working with batteries can be hazardous. Review all battery warnings and cautions.

VEHICLE INFORMATION

MODEL NUMBER DESIGNATION

Example: V16DW36NA

GROUP	MODEL YEAR	MODEL	MODEL TYPE	ENGINE SIZE	ENGINE HP	SERIES	COLOR	PREMIUM DESIGNA-TION
1st	2/3rd	4th*	5th*	6th*	7th*	8th	9th**	10th
V	14 15 16 17	B = Cross Roads C = Cross Country LE D = Cross Country G = Vegas H = Hammer L = Gunner M = Judge R = Boardwalk S = Vision Tour T = Cross Country Tour U = Magnum X-1 W = High-Ball X = Jackpot Y = Magnum Z = Ness Magnum	A = 8 Ball B = Standard R = Sport (Forward) S = Sport (Mid) W = ABS	1 = 1507 cc (92 ci) 2 = 1634 cc (100 ci) 3 = 1731 cc (106 ci)	6 = Free-dom 106	E = Int'l N = North America	A = Black B = Gloss Black C = Pearl White D = Sunset Red E = Titanium Crystal H = Havasu Red J = Blue Fire L = Matte Titanium / Flames M = Black Crystal / Antifreeze Grn N = Black Crystal / Havasu Orange Pearl P = Matte Pearl White R = Black Pearl / Sunset Red T = Matte Titanium U = Turbo Silver V = Black Crystal / Ness Graphics W = Gloss Pearl White X = Suede Sagebrush Green Y = Matte Pearl White Z = Sunset Red	C = California A = Canada

* = digits that would transfer to 17 digit VIN and are used in digits 4-8 respectively.
** = 9th digit will be used on color/featured versions of models (not including the base).
First 3 digits and 9th digit are used in model number only. They are not used with the 17 digit VIN.

VEHICLE IDENTIFICATION NUMBER (VIN) DESIGNATION

Example: 5VPXB36N0C3000000

WORLD MFG. ID			VEHICLE DESCRIPTORS						VEHICLE IDENTIFIERS							
			CHASSIS	TYPE	ENGINE SIZE	ENGINE HP	SERIES	CHECK DIGIT	MODEL YEAR*	MFG. LOCATION	SERIAL NUM.					
1	2	3	4	5	6	7	8	9	10	11	12	13	14	15	16	17
5	V	P	X	B	3	6	N	0	C	3	0	0	0	0	0	0
* Model Year: A = 2010; B = 2011; C = 2012; D = 2013-2014; F = 2015; G = 2016; H=2017																

VIN NUMBER / MANUFACTURER LABEL

The Manufacturer Information Label ① contains the following:

- Vehicle Identification Number
- Gross Vehicle Weight Rating.
- Gross Axle Weight Rating.
- Tire and Wheel Information.
- Date of Manufacture.

VECI / NECI / TIRE INFORMATION LABELS

The Vehicle Emission Control Information (VECI) and Noise Emission Control Information (NECI) ② label is located on the left side of the head tube.

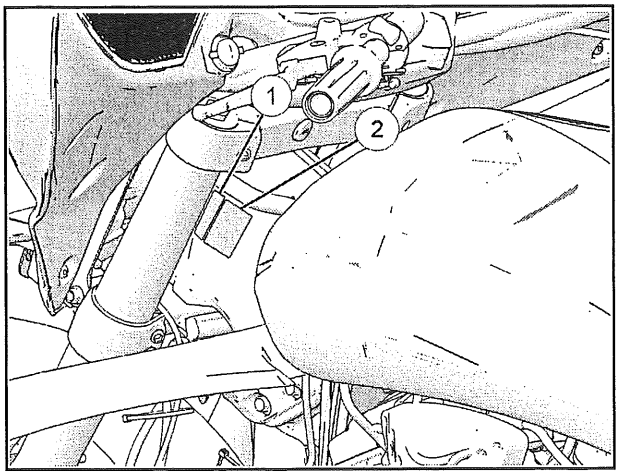

ENGINE NUMBER LOCATION

The engine number ③ is stamped into the right crankcase boss and identifies engine model and serial number.

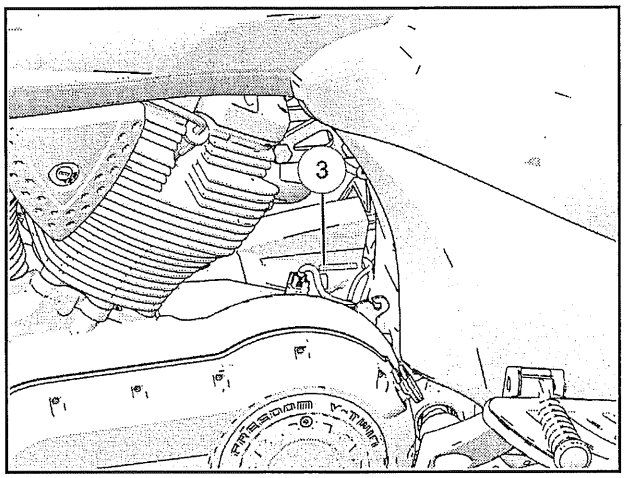

KEY IDENTIFICATION NUMBER

The key identification number is stamped on a tag attached to the key ring. If key and identification number are lost or misplaced, the lock set must be replaced.

Key blanks are available from Victory. Locksmiths familiar with the motorcycle industry will be able to cut a replacement key with an I.D. number and a key blank.

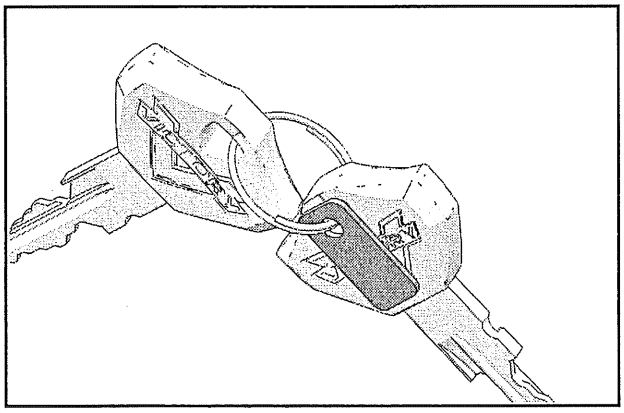

SADDLEBAG WARNING LABEL

Saddlebag Warning Label ⑤.

REAR SHOCK AIR PRESSURE LABEL

Rear Shock Air Pressure Label ⑥.

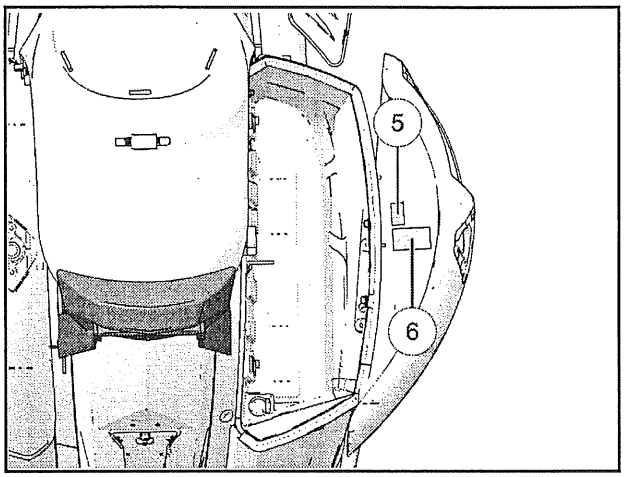

GENERAL SPECIFICATIONS

2012-2017 CROSS COUNTRY / CROSS COUNTRY TOUR / 8–BALL SPECIFICATIONS

		CROSS COUNTRY / 8–BALL	CROSS COUNTRY TOUR
CAPACITIES & DIMENSIONS	Oil Capacity	5.0 Qt. (4.75 ltr) (Approximately 4.5 qts. or 4.25 L at oil & filter change)	
	Fuel Capacity	5.8 US Gal (22.0 L) (1.0 U.S. gal / 3.8 L reserve)	
	Fuel Type / Octane Minimum	Premium Unleaded / 91 Octane	
	Dry Weight	768 lbs (348 kg) / 746 lbs (348 kg)	844 lbs (383 kg) / 760 lbs (345 kg)
	Wet Weight	800 lbs (363 kg) / 781 lbs (354 kg)	876 lbs (398 kg) / 795 lbs (361 kg)
	Gross Vehicle Weight Rating	1360 lbs (618 kg)	
	Gross Axle Weight Rating	Refer to Manufacturer Information label on frame of vehicle (left side of steering head)	
	Maximum Load	Subtract Wet Weight from GVWR or refer to Rider's Manual. Never exceed GVWR	
	Overall Length	104.3 in. (265.0 cm) / 104.3 in. (265.0 cm)	108.1 in. (274.7 cm) / 104.3 in. (265.0 cm)
	Overall Width	39.3 in. (99.9 cm)	
	Overall Height	52.5 in (133.3 cm)	60.0 in. (152.5 cm) / 53.2 in. (135.1 cm)
	Seat Height	26.25 in (66.7 cm)	
	Ground Clearance	5.8 in (14.8 cm)	
	Total Storage Volume	21.3 gallons (80.6 L) / 21.3 gallons (80.6 L)	38.7gallons (146.5 L) / 21.3 gallons (80.6 L)
	Passenger Capacity	1	
	Wheelbase	65.7 in (166.9 cm)	
	Rake / Trail	29 Degrees / 5.6 in. (14.2 cm)	
ENGINE	Engine Type	VICTORY Freedom® V-Twin	
	Engine Configuration	50° SOHC V-Twin 4 Stroke	
	Engine Displacement	1731cc / 106 cubic inch 6 speed (106 / 6 engine)	
	Engine Cooling System	Air / Oil	
	Compression Ratio	9.4:1	
	Compression Pressure	210 - 225 psi (1448 - 1551 kPa)	
	Valve Train	4 Valves per cylinder. Hydraulic Lifters & Cam Chain Adjusters (No Adjustment)	
	Bore x Stroke	101 x 108 mm	
	Idle Speed / Fast Idle Speed	NOT ADJUSTABLE - ECM Controlled by IAC (Spec Idle Speed is 950 +/- 100 RPM)	
	Fuel System / Throttle Body Bore Size	Closed Loop Sequential Electronic Fuel Injection / Dual Bore 45 mm	
	Exhaust System Type	Split Dual Exhaust With Crossover	
	Lubrication System	Wet Sump	
	Spark Plug Type (Gap)	NGK DCPR6E (.032 in. / .8 mm)	
	Dry Weight (Engine Approximate)	265 lbs (120 Kg)	
BRAKES	Brake Type (Front / Rear)	Disc / Disc	
	Front Brake	Dual 300x5mm Floating Disc / 4 Piston Calipers ABS	
	Rear Brake	Single 300x7mm Floating Disc / 2 Piston Caliper ABS	

		CROSS COUNTRY / 8–BALL	CROSS COUNTRY TOUR
DRIVESYSTEM	Transmission Type	Manual, 6 Speed Constant Meshwith True Overdrive	
	Primary Reduction Ratio	1.49:1	
	Final Drive / Ratio / Belt Width	Carbon Fiber Reinforced Belt / 2.12:1 / 28mm	
	Gear Shift Pattern	1 Down, 5 Up	
	Internal Gear Ratios 1st	3.13:1	
	2nd	2.02:1	
	3rd	1.50:1	
	4th	1.20:1	
	5th	1:1	
	6th	0.87:1	
SUSPENSION	Front Wheel (Size / Type)	Cast or Billet / 3.5 x 18 (inch) Spoke Type — 3.50 X 18"	
	Rear Wheel (Size / Type)	Cast or Billet 5.00 x 16 (inch) Spoke Type — 5.00 X 16"	
	Front Tire	Dunlop D418F Elite 3- 130/70 R18 63H Radial Dunlop 491 Elite II — 130/70–18 63H Bias-PLy (Tube Type)	
	Rear Tire	Dunlop D418 Elite 3 - 180/60R16 M/C 80H Radial Dunlop D418 Elite 3 — 180/60R16 M/C 80H Radial (Tube Type)	
	Minimum Tread Depth	.063 in. (1.6mm)	
	Front Type	Inverted Telescopic Cartridge Fork	
	Front Travel	5.1 in. (13 cm)	
	Front Tube Diameter	43 mm (1.7 in.)	
	Rear Shock Type	Single, Monotube Air Adjustable Shock	
	Rear Swingarm Type	Cast Aluminum with Constant Rate Linkage	
	Rear Travel (inches)	4.7 in (12 cm)	
LIGHTS	HID Headlamp	High H-11 / Low: D1SR	
	Turn Signal Lamp	Non-Serviceable LED	
	Brake / Tail / License Plate Lamp	Non-Serviceable LED	
	Alternator / Battery	625W (48A @ 13.0VDC) / 12V 18AH 310 CCA	
FUSES	Turn Signal / Horn	10 amp fuse	
	Chassis	20 amp fuse	
	Engine	15 amp fuse	
	Fuel Pump / Ignition Coil	15 amp fuse	
	Ignition	10 amp fuse	
	Lights	20 amp fuse	
	Circuit Breakers	See fuse box label Fuse Replacement (Main Fuse Box), page 2.38	
FUEL	Fuel Type	Premium Unleaded / 91 Octane Minimum	
	Fuel Pump Pressure	3.51 BAR (351 kPa) (51 psi)	
	Fuel Pump Volume	60 liters / hr (500 ml or 16.9 oz. / 30 seconds) (0.26 gal / min) (@ 12 V)	
	Fuel Level Sensor Resistance	Empty: 250 Ohms / Full: 50 Ohms	
	Fuel Pump Current Draw	Less than 5.0 Amps	
	Fuel Injector Resistance	11.4 - 12.6 Ohms	

Specifications may change with the addition of custom order options and / or accessories. Polaris Industries Inc. reserves the right without prior notice to discontinue at any time at its discretion any of the items herein or change specifications or designs without incurring any obligation to the customer.

2015–2017 VICTORY MAGNUM / MAGNUM X-1

		MAGNUM / NESS	MAGNUM-X1
CAPACITIES & DIMENSIONS	Oil Capacity	5.0 Qt. (4.75 ltr) (Approximately 4.5 qts. or 4.25 L at oil & filter change)	
	Fuel Capacity	5.8 US Gal (22.0 L) (1.2 U.S. gal / 4.51 L reserve)	
	Fuel Type / Octane Minimum	Premium Unleaded / 91 Octane	
	Dry Weight	778 lbs (353 kg)	787 lbs (357 kg)
	Wet Weight	810 lbs (367 kg)	822 lbs (373 kg)
	Gross Vehicle Weight Rating	1310 lbs. (595 kg)	
	Gross Axle Weight Rating	Front Axle: 460 lbs. (209 kg)	Rear Axle: 850 lbs. (386 kg)
	Maximum Load	491 lbs. (223 kg)	497 lbs (225 kg)
	Overall Length	104.6 in. (265.7 cm)	
	Overall Width	39.3 in. (100 cm)	
	Overall Height	53.8 in. (136.7 cm)	
	Seat Height	25.7 in (65.4 cm)	
	Ground Clearance	5.3 in (13.4 cm)	
	Total Storage Volume	21.3 gallons (80.6 liters)	
	Passenger Capacity	1	
	Wheelbase	65.7 in (167 cm)	
	Rake / Trail	29 Degrees / 5.6 in. (14.2 cm)	
ENGINE	Engine Type	VICTORY Freedom 106 / 6 V-Twin	
	Engine Configuration	50 SOHC V-Twin 4 Stroke	
	Engine Displacement	1731cc / 106 cubic inch 6 speed (106 / 6 engine)	
	Engine Cooling System	Air / Oil	
	Compression Ratio	9.4:1	
	Compression Pressure	210 - 225 psi (1448 - 1551 kPa)	
	Valve Train	4 Valves per cylinder. Hydraulic Lifters & Cam Chain Adjusters (No Adjustment)	
	Bore x Stroke	101 x 108 mm	
	Idle Speed / Fast Idle Speed	NOT ADJUSTABLE - ECM Controlled by IAC (Spec Idle Speed is 950 +/- 100 RPM)	
	Fuel System / Throttle Body Bore Size	Closed Loop Sequential Electronic Fuel Injection / Dual Bore 45 mm	
	Exhaust System Type	Split Dual Exhaust With Crossover	
	Lubrication System	Wet Sump	
	Spark Plug Type (Gap)	NGK DCPR6E (.032 in. / .8 mm)	
	Dry Weight (Engine Approximate)	265 lbs (120 Kg)	
BRAKES	Brake Type	Disc / Disc	
	Front Brake	Dual 300x5mm Floating Disc / 4 Piston Calipers ABS	
	Rear Brake	Single 300x7mm Floating Disc / 2 Piston Caliper ABS	

		VICTORY MAGNUM	MAGNUM-X1
DRIVE SYSTEM	Transmission Type	Manual, 6 Speed Constant Mesh with True Overdrive	
	Primary Reduction Ratio	Gear Drive with Torque Compensator (1.49:1)	
	Final Drive / Ratio / Belt Width	Carbon Fiber Reinforced Belt / 2.12:1 / 28mm	
	Gear Shift Pattern	1 Down, 5 Up	
	Internal Gear Ratios 1st	3.13:1	
	2nd	2.02:1	
	3rd	1.50:1	
	4th	1.20:1	
	5th	1:1	
	6th	0.87:1	
SUSPENSION	Front Wheel (Size / Type)	Cast 3.5 x 21 (inch)	Billet 3.5 x 21 (inch)
	Rear Wheel (Size / Type)	Cast 5.00 x 16 (inch)	Billet 5.00 x 16 (inch)
	Front Tire	DUNLOP D418F Elite 3 - 120/70R21 M/C 62V	
	Rear Tire	DUNLOP D418 Elite 3 - 180/60R16 M/C 80H	
	Minimum Tread Depth	.063 in. (1.6mm)	
	Front Type / Travel	Telescopic Fork / 5.1 in. (13 cm)	
	Front Tube Diameter	43 mm (1.7 in.)	
	Rear Shock Type / Travel (inches)	Single Monotube Air Adjustable Shock: 4.4 in (11.3 cm)	
	Rear Swingarm Type	Cast Aluminum with Constant Rate Linkage	
LIGHTS	Headlights	HID Headlamp: High H11 / Low H11 LED Headlamp: Non-Serviceable LED	
	Turn Signal Lamp	Non-Serviceable LED	
	Brake / Tail / License Plate Lamp	Non-Serviceable LED	
	Alternator / Battery	700W @ 2000 RPM, 48 Amp Maximum Output / 12 Volt / 18 Amp Hour / 310 CCA / Yuasa YTX20HL	
FUSES	Turn Signal / Horn	10 amp fuse	
	Chassis	20 amp fuse	
	Engine	15 amp fuse	
	Fuel Pump / Ignition Coil	15 amp fuse	
	Ignition	10 amp fuse	
	Lights	20 amp fuse	
	Circuit Breakers	See fuse box label Fuse Replacement (Main Fuse Box), page 2.38	
FUEL	Fuel Type	Premium Unleaded / 91 Octane Minimum	
	Fuel Pump Pressure	3.51 BAR (351 kPa) (51 psi)	
	Fuel Pump Volume (@ 12 V)	60 liters / hr (500 ml or 16.9 oz. / 30 seconds) (0.26 gal / min)	
	Fuel Level Sensor Resistance	Empty: 250 Ohms / Full: 50 Ohms	
	Fuel Pump Current Draw	Less than 5.0 Amps	
	Fuel Injector Resistance	11.4 - 12.6 Ohms	

Specifications may change with the addition of custom order options and / or accessories. Polaris Industries Inc. reserves the right without prior notice to discontinue at any time at its discretion any of the items herein or change specifications or designs without incurring any obligation to the customer.

VEHICLE LOADING

GROSS VEHICLE WEIGHT RATING (GVWR)

⚠ WARNING

Exceeding the gross vehicle weight rating of your motorcycle can reduce stability and handling and could cause loss of control. NEVER exceed the gross vehicle weight rating of your motorcycle.

The *maximum load capacity* of your motorcycle is the maximum weight you may add to your motorcycle *without exceeding the GVWR*. This capacity is determined by calculating the difference between your motorcycle's gross vehicle weight rating and the wet weight.

Refer to the specification section of this manual or the Manufacturing Information / VIN label on the motorcycle frame for model-specific information. Refer to Information Label section in this manual for location on the motorcycle.

When determining the weight you will be adding to your motorcycle, and to ensure you do not exceed the maximum load capacity, include the following:

- Operator body weight.
- Passenger body weight.
- Weight of all riders' apparel and items in or on apparel.
- Weight of any accessories *and their contents*.
- Weight of any additional cargo on the motorcycle.

PUBLICATIONS / TECHNICAL LITERATURE

PUBLICATION PART NUMBERS

Some Victory publications, such as Owner's Manuals and Parts Books are available on-line and can be downloaded from the Victory Motorcycles web site (http://www. polarisindustries. com/en-us/Victory/). Click on the Riders pull down menu and select Manuals and Parts.

Service Manuals and Owner's Manuals can be purchased through any authorized Victory Motorcycle dealer. The part numbers are listed in the following table. Some manuals are available for purchase on-line at www.purepolaris.com.

MODEL	SERVICE MANUAL PN	OWNER'S MANUAL PN
2013–2017 Vegas, Hammer, High-Ball, Jackpot, Judge, Boardwalk, Gunner	9927624	9927114
		9927115
		9927116
2012–2017 Vision	9927626	9927117
		9927118
		9927331
2012–2017 Cross Roads Classic / Cross Roads 8–Ball / Cross Country / Cross Country Tour / Cross Country 8–Ball / Ness / Hard-Ball / Magnum / Magnum X-1	9927627	9927119
		9927120
		9927332

REFINISHING

PAINT COLORS BY MODEL

The 8th Digit of the model number (either a C, D, L, or U) designates the Series:
(C = CANADA, D = Domestic (49 State), E = Europe, L = CALIFORNIA, and U = United Kingdom.
The 9th letter of the model number designates the color.

MODEL NUMBER	COLOR
2012 VICTORY CROSS ROADS / CROSS ROADS CLASSIC LE / CROSS ROADS HARD-BALL	
V12BW36NA, NAA, NAC	Black
V12BW36EA	Black (soft bags)
V12EW36EA	Black (hard bags)
V12EW36NZ, NZC, NZA, EZ	Flat Black with Red Pinstripe (hard bags)
V12BW36NS, NSA, NSC	Sunset Red
V12BW36EB	Sunset Red (soft bags)
V12EW36ES	Sunset Red (hard bags)
V12EW36EB	Imperial Blue
V12BW36NR, NRA, NRC, ER	Black with Classic graphics
2012 VICTORY CROSS COUNTRY / CROSS COUNTRY TOUR / NESS	
V12DW36NA, NAA, NAC, EA	Solid Black
V12DW36NCA	Sunset Red
V12DW36NY, NYA, NYC, EY	Sunset Red & Silver
V12TW36NA, NAC, NAA, EA	Black
V12TW36NS, NSA, NSC, ES	Sunset Red
V12TW36ET	Sunset Red & Silver
V12KW36NN, NNA, NNC, EN	Boardwalk Blue / Ness Graphics
V12TW36NW, NWA, NWC, EW	Pearl White

MODEL NUMBER	COLOR
2013 VICTORY CROSS ROADS CLASSIC / HARD-BALL	
V13BW36EB, NB, NBA, NBC	Burgundy / Classic Graphics
V13EW36EZ, NZ, NZA, NZC	Flat Black with Red Pinstripe (hard bags)

MODEL NUMBER	COLOR
2013 VICTORY CROSS COUNTRY / CROSS COUNTRY TOUR / NESS	
V13DW36EA, NA, NAA, NAC	Black
V13DW36EF, NF, NFA, NFC	Anti-Freeze Green / Flame Graphics
V13DW36ES, NS, NSA, NSC	Sunset Red
V13DW36ET, NT, NTA, NTC	Super Graphite
V13TW36EA, NA, NAA, NAC	Black
V13TW36EC, NC, NCA, NCC	Nuclear Sunset / Graphics
V13TW36EL, NL, NLA, NLC	Bronze Mist

MODEL NUMBER	COLOR
2013 VICTORY CROSS COUNTRY / CROSS COUNTRY TOUR / NESS	
V13TW36EU, NU, NUA, NUC	Boardwalk Blue
V13KW36EK, NK, NKA, NKC	Gold Digger Pearl / Ness Graphics
V13ZW36EV, NV, NVA, NVC	Suede Titanium Metallic / Ness Graphics
V13DW36NN, NNC, NNA	Suede Nuclear Sunset

MODEL NUMBER	COLOR
2014 VICTORY CROSS ROADS 8–BALL / CLASSIC	
V14AB36NA / NAA / NAC	Black
V14BW36EL / NL / NLA / NLAC	Bronze Mist
2014 VICTORY CROSS COUNTRY / CROSS COUNTRY TOUR / NESS	
V14DW36NJ / NJA / NJC	Matte White
V14DW36NH / NHA / NHC / EH	Havasu Red
V14DW36NE / NEA / NEC / EE	Black SS Gray
V14DW36NT / NTA / NTC	Tequila Gold
V14TW36NA / NAA / NAC / EA	Black
V14TW36NZ / NZA / NZC / EZ	Sunset Red / Black
V14TW36ND / NDA / NDC	Blue Fire
V14TW36NG / NGA / NGC / EG	Gold Mist
V14ZB36NV / NVA / NVC	Suede Titanium Metallic / Ness Graphics

MODEL NUMBER	MODEL
2016 VICTORY CROSS COUNTRY 8–BALL	
V16DA36NA, NAA, NAC	Gloss Black
2016 VICTORY CROSS COUNTRY / CROSS COUNTRY TOUR / MAGNUM / MAGNUM X-1	
V16DB36NY / NYA / NYC	Matte Pearl White
V16DB36NT / NTA / NTC	Matte Titanium
V16YW36NF / NFA / NFC / EF	Black Metasheen / Supersteel Gray / Graphics
V16YW36NP / NPA / NPC / EP	Matte Pearl White
V16DW36NH / NHA / NHC / EH	Havasu Red Pearl
V16TW36NC / NCA / NCC / EC	Gloss Pearl White 2 / Supersteel Gray
V16YW36NK / NKA / NKC / EK	Black Metasheen/Havasu Red Pearl
V16DB36NS / NSA / NSC	Unpainted
V16YW36NS / NSA / NSC	Unpainted
V16UW36NM / NMA / NMC / EM	Matte / Suede Supersteel Gray

MODEL NUMBER	MODEL
2017 VICTORY CROSS COUNTRY / CROSS COUNTRY TOUR / MAGNUM / MAGNUM X-1	
V17XDAAAAA / AD /A E / AS /AX / BA / BD / BE / BS / BX / CA / CD / CE /CS / CX / ZA / ZD / ZE / ZS	Black / Sunset Red

MODEL NUMBER	MODEL
V17XMAAAAC / AF / AG / AX / BC / BF / BG / BX / CC / CF / CG / CX / ZC / ZF / ZG /A1 / B1 / C1 / Z1	Indy Red Pearl / Gloss Black / Pearl meltdown w/Victory graphics / Pearl White
V17XTAAAAA / AU / BU / BA / BL / BU / CA / CL / CU / ZA / ZL / ZU	Gloss Black / Gloss Sunset Red / Matte Nuclear Sunset Orange / Suede Pearl White / Turbo Silver w/Victory Graphics / Blue Fire

PAINT COLOR CODES

For current information Victory Dealers can go to www. polarisdealers. com/News, Forms, and Links. Enter PAINT CODES in the search box.

2014

PAINT COLOR:	PAINT CODE	NOTES
Black	P-266	
Vogue Silver	P-354	
Bronze Mist	P-451	
Flat Black	P-463	
Sunset Red	P-520	
Engine Black	P-521	
Boardwalk Blue	P-524	
Pearl White	P-566	
Imperial Blue	P-598	
Red Pearl	P-649	
Anti-Freeze Green	P-1335	
Super Graphite	P-1339	
Gold Digger Pearl	P-1341	
Suede Titanium Metallic	P-1342	
Gold	P-1355	
Blue Fire	P-1359	
Gold Mist	P-1360	
Imperial Blue	P-1363	
Burgundy	–	
Metallic Flake Additive	METALLIC	Add vial of flake to quart of clear base
Clear	C	
UNDERCOATERS (Base Coat Only)	WU, OWU, PWU, VVU	WU=White Undercoater; OWU=Off-White Undercoater; PWU=Pearl White Undercoater; VVU=Victory Violet Undercoater

2015

PAINT COLOR	PAINT CODE	NOTES
Sunset Red	P-520	
Metasheen Black	P-677	
S.S. Gray	P-553	
Plasma Lime	P-671	
Midnight Cherry	P-554	
Turbo Silver	P-1393	
Black	P-266	
Fireball Red	P-575	
Matte Black	P-463	
Matte Titanium	P-632	
Blue Fire	P-620	
Havasu Red	P-649	
Pearl White	P-566	
Matte Pearl White	P-675	
Titanium	P-602	

2017

PAINT COLOR	PAINT CODE	NOTES
Suede Pearl White	P-675	
Havasu Red Pearl	P-649	
Blue Fire	P-620	
Gloss Black	P-226	
Gloss Pearl White 2	P–566	
Supersteel Gray	P-1431	
Matte Pearl White	P–675/1461	
Black Crystal	P–677	
S.S. Gray	P-1431	
Matte Titanium	P- 632	
Matte / Suede Supersteel Gray	P- 637	
Indy Red	P-708	
Two-Tone Silver		
Habanero Inferno Orange		
Sunset Red	P-520	
Nuclear Sunset Orange	P-707	

BREAK IN PERIOD

BREAK-IN PROCEDURE

There is never a more important period in the life of a new Victory motorcycle than the period between zero and 500 miles (805 km). A Victory motorcycle is manufactured using the best possible materials and manufacturing techniques, but the final machining process is the break-in. During break-in period, many parts in the engine wear and polish to correct operating clearances. During this time, the operator should:

- Avoid prolonged full throttle operation.
- Avoid operation which might result in excessive heating of the engine.

The general break-in guidelines are as follows:

BREAK-IN GUIDELINES		
Miles/km	Throttle Position	Notes
0-90 miles	0-1/3	Avoid prolonged operation above 1/3 throttle. Stop engine and let it cool following every hour of operation. Vary speed of motorcycle. Do not operate machine at one set throttle position.
90-300 miles	0-1/2	Avoid prolonged operation above 1/2 throttle. Stop engine and let it cool following every hour of operation. Vary speed of the motorcycle. Do not operate machine at one set throttle position.
300-500 miles	0-3/4	Avoid cruising speeds above 3/4 throttle.
500 miles	*Replace the engine oil and engine oil filter.* Perform 500 mile service on the machine. See Oil Change Specifications, page 2.4 for more information.	
500 +	Avoid prolonged full-throttle operation. Vary the engine speed occasionally. Follow the pre-ride inspection outlined in the owner's manual.	

EMISSIONS

EMISSION CONTROL SYSTEMS

The U. S. Environmental Protection Agency and California Air Resources Board (CARB) require manufacturers to certify that their motorcycles comply with applicable exhaust emissions standards during their useful life, and that motorcycles built after January 1, 1983 comply with applicable noise emission standards for one year or 6,000 km (3,730 mi) after the time of sale to the ultimate purchaser, when operated and maintained according to the instructions provided.

EMISSION SOURCES

An internal combustion engine produces carbon monoxide and hydrocarbons during operation. Hydrocarbons must be controlled because under some conditions hydrocarbons react with sunlight to produce photochemical smog. Carbon monoxide must be controlled because it is toxic.

EXHAUST EMISSION CONTROL

Victory Motorcycles have an electronic engine management system which controls fuel delivery and ignition timing to control hydrocarbon and carbon monoxide emissions. Follow the Periodic Maintenance Interval Table and inspect the emission control system as outlined in this manual. No adjustments can be made to the EEC system.

NOISE EMISSION CONTROL SYSTEM

Tampering with Noise Control Systems is Prohibited. Federal law prohibits the following acts or causing thereof:

1. The removal or rendering inoperative by any person other than for purposes of maintenance, repair or replacement, any device or element of design incorporated into the motorcycle for the purpose of noise control prior to its sale or delivery to the ultimate purchaser or while it is in use, or
2. The use of the motorcycle after such device or element of design has been removed or rendered inoperative.

   Among those acts presumed to constitute tampering are the acts listed below:
3. Removal of, or puncturing the muffler, baffles, header pipes or any other component which conducts exhaust gases.
4. Removal or puncturing of any part of the intake system.
5. Lack of proper maintenance.
6. Replacing any moving part of the motorcycle or parts of the exhaust / intake system with parts other than those specified by the manufacturer.

CRANKCASE EMISSION CONTROL

The crankcase emission control system is comprised of a closed system that routes crankcase emissions through the air cleaner into the combustion chamber.

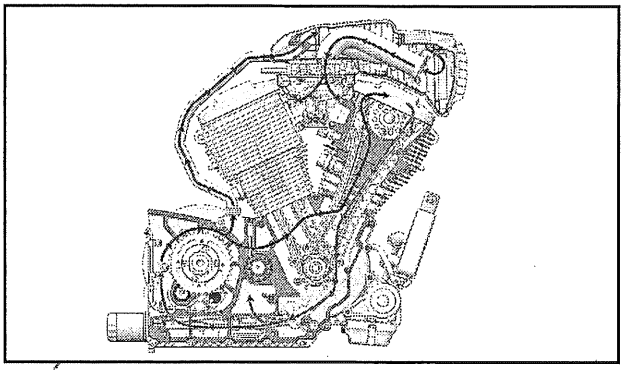

COLOR	DESCRIPTION
Green	Engine Oil (liquid)
Red	Engine Oil (mist)
Blue	Engine Vapors

EVAPORATIVE EMISSION CONTROL

California models are equipped with an Evaporative Emissions Canister mounted under the rear fender. Activated charcoal inside the canister temporarily stores fuel vapor from the fuel tank vent system. The Electronic Control Module (ECM) opens a canister purge valve that connects the charcoal canister to the intake tract (when conditions are correct) to purge the canister of vapors absorbed by the charcoal. Refer toFuel Tank Evaporative Emissions System - California Models, page 5.11 for system diagram and Periodic Maintenance Interval Table, page 2.5 for maintenance.

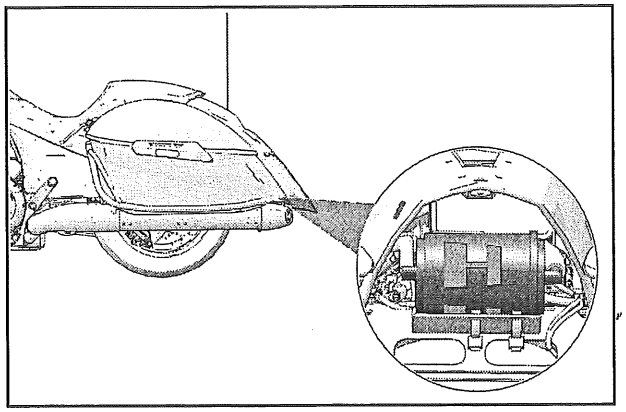

SPECIAL SERVICE TOOLS

GENERAL / PRECISION MEASURING TOOLS

TOOL	PART NUMBER
Bearing & Seal Driver Set	PV-43558
Bodywork Removal Tool Set	PV-49955
Bore Gauge Set, 50-100mm	PV-3017
Dial Caliper (Metric, 0-150mm)	PV-26900-7
Dial Caliper (Electronic Conversion. English 0-6" / Metric 0-150mm)	PV-39776
Dial Indicator, Adjustable (Metric. 10mm travel)	PV-26900-12
Dial Indicator Stand, Flexible. Magnetic Base	PV-34481
Engine Ear Listening Device	PV-39565
Feeler Gauge Set	PV-26900-8 or PV-26900-9
Outside Micrometer (0-25 & 25-50mm)	PV-3006, PV-3007
Outside Micrometer Set (0-100mm)	PV-3009
Small Hole Gauge Set	Commercially Available
Straight Edge, Precision	PV-34673
Surface Plate	Commercially Available
Telescoping Gauge Set	PU-45423
Torque Wrench (3/8" Drive 0-50 in-lb. beam type)	PV-43543
Torque Wrench (1/2" Drive 0-150 ft-lbs beam type)	PV-43552
Torque Wrench (3/8" Drive 15-100 ft-lbs click type)	PV-43564

TUNE UP & MAINTENANCE TOOLS

TOOL	PART NUMBER
Belt Tension Gauge	PV-43532
Belt Tension - Sonic Tension Meter	Commercially available
Cylinder Leakdown Tester	PV-35667-A
Compression Gauge Set	PV-33223
Oil Pressure Gauge Set	PV-43531
Vacuum Brake Bleeder	PV-50204
Front Brake Lever Reserve Inspection Adapter	PV-50104

ELECTRICAL TOOLS

TOOL	PART NUMBER
Ammeter Inductive Clamp for Fluke 73™ Multimeter	PV-39617
Cruise Control Jumper Harness (Diagnostic) Kit	PV-49358
Electrical Connector Test Adapter Kit	PV-43526
Inductive Timing Light	PV-43537
Multimeter, Fluke 73™	PV-43546
Battery / Conductance Tester	MDX - 610P / PU-50296

ENGINE, CLUTCH, & TRANSMISSION TOOLS

TOOL	PART NUMBER
Clutch Shaft Bearing Support (for clutch shaft installation)	PV-47331
Crankcase Assembly Tool (Crankcase Installer)	PV-46299 (Must be used with PV-45030) and Adapter (Extension) PVX-47429
Crankcase Assembly Tool Adapter	PVX-47429
Crankshaft Bearing Protector	PV-47207
Crankshaft Rotation Tool	PV-48736
Crankcase Separator (Crankcase Removal)	
Engine Hoist or Lift	Commercially Available
Engine Lock Tool	PV-43502-A
Engine Stand	Commercially Available
Flywheel Puller	PV-43533
Mainshaft (Clutch Shaft) Holder	PV-45028
Crankcase Installation Tool (Crankcase Assembly)	PV-46299 (Must be used with PV-45030)
Mainshaft (Output Shaft) Seal Installation Tool	PV-43505
Piston Ring Compressor (97mm +)	Includes PV-43570-1 Pliers, PV-43570-2 Band (3 5/8" to 3 7/8")
Valve Spring Compressors (Adapter is PV-43513-A)	PV-1253 or PV-4019 (Quick Release)

PV-47332B (MY11 complete new kit), or PV-47332A & PV-50371 (PV-50371 updates PV-47332A for MY11 engines)

STEERING & SUSPENSION TOOLS

TOOL	PART NUMBER
Blind Bearing Remover Set	PV-43551
Wheel Bearing Service Set	PV-49462
Fork Spring Compressor	PV-49463
Cartridge Shaft Extension	PV-49453
Cartridge Holder	PV-49452
Fork Oil Level Gauge	PV-59000-A
Fork Seal Driver 43mm, Inverted Forks	PV-47035
Fork Seal Guide Tool, 43mm	PV-47037
Steering Bearing, Wheel Bearing Installation Set	PV-43515
Steering Stem Bearing Adjustment Socket	PV-43508
Steering Stem Bearing Spanner Wrench	PV-43509
Shock Spring Compressor	PV-43571

WHEEL & TIRE

TOOL	PART NUMBER
Air Pressure Gauge	PV-48909 (Victory Air Pump & Gauge) Or Commercially Available Tire Pressure Gauge
Tire Bead Breaker (May be part of the tire removal equipment being used)	Commercially Available
Tire Mounting Lubricant	Commercially Available
Tire Removal Equipment	Commercially Available
Rim Protector	PV-43536
Wheel Balancing/Truing Stand	Commercially Available

FUEL SYSTEM & FUEL INJECTION

TOOL	PART NUMBER
(See Fuel System Specifications, page 5.6 for more information)	
Victory/Polaris Diagnostic Tool Kit	PV-46085-B
PV-46085-B (above) INCLUDES:	Digital Wrench Software: PU-47052-G
	Standard Interface Cable: PU-47151
	Victory Adapter: PV-46085-2
	SmartLink Interface Kit: PU-47471
Fuel Pressure Gauge	PU-43506-A
Fuel Pressure Gauge Adapter	PV-48656
Fluke 73 Digital Multi-Meter or (Fluke 77 DMM)	PV-43546 (Fluke 77 - PV-43568)
Electrical Connector Test Adapter Kit	PV-43526
Laptop Computer (Refer to diagnostic software user manual or HELP section for minimum specifications	Commercially Available
Fuel TankX Fitting Plug Tool (9.5mm) 2009-2011	PV-50251
Fuel Tank Fitting Plug Tool (11.8mm) 2011-current *Refer to Fuel System Service Tools, page 5.6 for tool application details.*	PV-50567

TOOL ORDERING INFORMATION

Order Special Service Tools from Bosch Automotive Service Solutions Corporation (Phone 800-328-6657 / FAX 586-578-7375) or use the link on the Victory Dealer Web site.

If you are not a Victory dealer use the phone or FAX number listed above or visit http://polaris. service-solutions.com/

TRANSPORTING, ELEVATING, AND SECURING THE MOTORCYCLE

GENERAL GUIDELINES

⚠ WARNING

Care should be taken to be sure the motorcycle will not tip or fall while elevated. Severe personal injury or death could occur if the motorcycle tips or falls.

If you must transport the motorcycle or secure it to a lift table:

- Use a truck, trailer, or lift table designed or equipped properly for motorcycles. Review truck, trailer or lift manufacturer's recommendations.
- Do not tow the motorcycle with another vehicle, as towing will impair the motorcycle's steering and handling, which can cause a loss of control.
- Position and restrain the motorcycle so it remains upright on the truck, trailer, or lift table as gasoline may leak out of the fuel tank vent if the motorcycle is transported at extreme angles. Gasoline is a fire hazard and it can also damage the motorcycle's finish.
- Do not restrain the motorcycle using the handlebars. Place soft tiedown straps around lower triple clamp and fork tube, clear of any cables, wire harness, or other parts.
- Secure the rear of the motorcycle with tiedowns around the swingarm, being careful to avoid brake lines, exhaust, drive belt, or drive belt guards.
- The motorcycle can be elevated by placing a stable, flat platform jack or lift mechanism on a firm flat surface and lifting under the engine crankcase. The platform should be a *minimum* 12 inches square, and clear of any components under the motorcycle. DO NOT attempt to lift the motorcycle without properly securing it with straps.

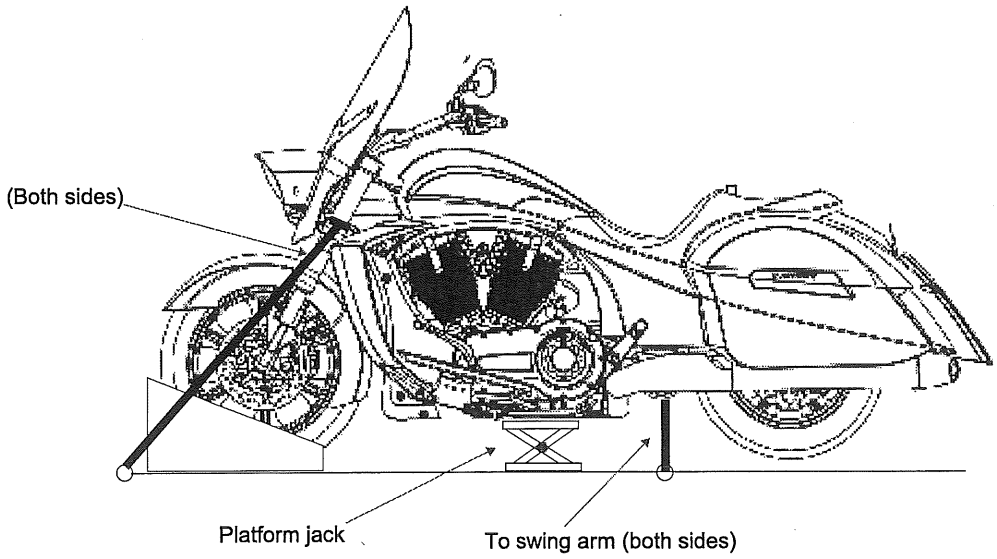

KEY SWITCH

IGNITION KEY

The ignition key operates the ignition switch only.

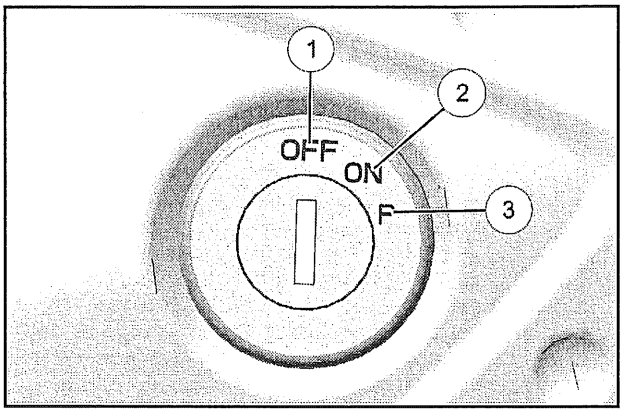

IGNITION SWITCH

The ignition switch has 3 positions - OFF, ON, and PARK.

Ignition Switch Function

ITEM	INDICA-TOR	FUNCTION
①	OFF	No electrical circuits are active. Ignition key can be removed from the switch.
②	ON	All electrical circuits are energized and the ignition key cannot be removed. The headlight, tail light, and instrument lights illuminate. The engine stop/run switch must be in the RUN position to start the engine or activate the turn signals and other electrical features.
③	PARK	Tail light, indicator lights, and license plate light illuminate. The radio can be operated and instrumentation is active. The emergency flashers can be activated and the ignition key can be removed. You must push the ignition key into the switch to select the PARK position.

SPEEDOMETER / INSTRUMENTS - CROSS ROADS

SPEEDOMETER

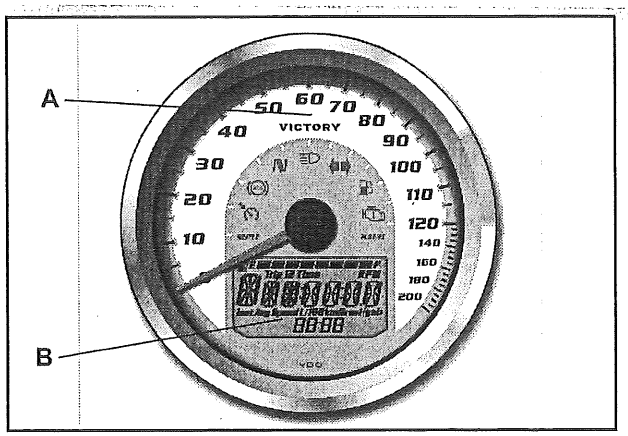

The speedometer (A) receives an input signal from the ECM. The ECM outputs the speed information to the speedometer via CAN. These outputs are displayed by the analog needle (speed) or in the MFD window (distance). The speedometer operates only when the ignition switch is in the On position and the speed sensor has an input (vehicle is moving). Refer to Speed Sensor Test, page 19.11 for speedometer or sensor diagnostics.

MULTI-FUNCTION DISPLAY (MFD)

The MFD (B) can display many items, selectable by the MODE button on the LH handlebar switch. See Electrical chapter for more information.

The MFD can display the following: (some accessory modes listed)

- Odometer
- Trip Odometer 1 & 2
- Fuel Economy
- Tachometer
- Gear Indicator
- Clock
- Trip Hours
- Avg. Speed
- DC Voltage
- Ambient Air Temp
- Diagnostic Functionality (Engine Error Codes)
- Oil Pressure Warning

SPEEDOMETER GEAR POSITION INDICATOR

Victory Motorcycles with a gear indicator display will show two dashes (–) if the clutch is disengaged (lever pulled in).

The gear indicator system uses multiple inputs to determine gear number (1-6). ALL of the following criteria must be present for gear indicator function:

- Vehicle ignition and run / stop switch are powered and the engine is running.
- Vehicle is in motion.
- Vehicle clutch is engaged (clutch lever out).
- Vehicle transmission is in gear 1 through 6 (not neutral).

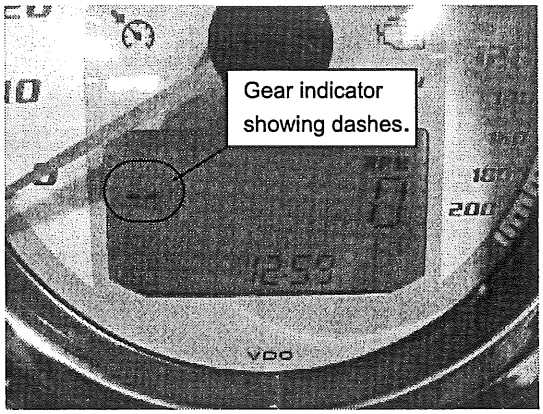

INSTRUMENT CLUSTER

Instrument Cluster

Speedometer

The speedometer displays vehicle speed in either miles per hour (MPH) or kilometers per hour (km/h).

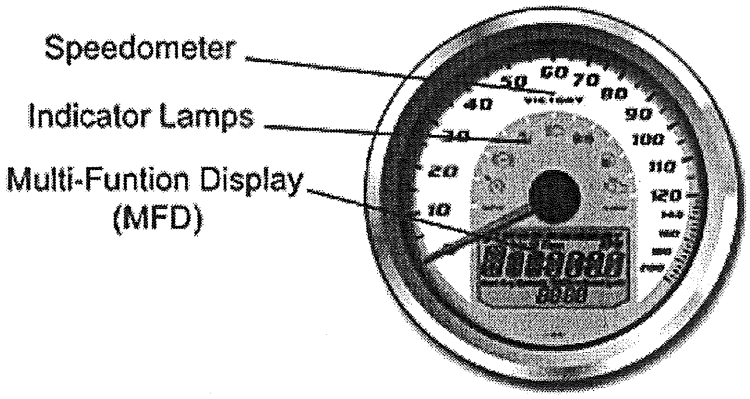

Indicator Lamps

Lamp	Indicates	Condition
	Anti-Lock Brake (ABS) Test / Fault	ABS light always illuminates when key is in the ON position and remains on until the ABS system is initialized. Speed > 6 MPH.
	Neutral	This lamp illuminates when the transmission is in neutral and the ignition key is in the ON position.
	High Beam	This lamp illuminates when the headlamp switch is set to high beam.
	Turn Signal	The turn signal indicator flashes when the left, right, or both turn signals (hazard) are active. *If a bulb fails, or if there is a short circuit in the signal system, the lamp flashes at more than twice the normal rate.*
	Low Oil Pressure ***Oil Pressure Warning located on MFD for MY12*** ***SEE IMAGE BELOW***	This lamp illuminates when the ignition switch is in the ON position and the engine is off, indicating that the indicator circuit is functioning properly. This lamp also illuminates if engine oil pressure drops below safe operating pressure. If this lamp illuminates while the engine is running, turn the engine off as soon as safely possible and check the oil level. *If the oil level is correct and the lamp remains on after the engine is restarted, turn the engine off immediately.*
	Low Fuel	This lamp illuminates when approximately one gallon (3.8 liters) of fuel remains in the fuel tank.
	Check Engine	This lamp illuminates momentarily when the ignition switch is in the ON position and the engine is off. This indicates proper function. *If this lamp illuminates while the engine is running, contact an authorized VICTORY dealer promptly for diagnosis.* The light will remain on if the tilt sensor shuts down the engine. If abnormal sensor or engine operation is detected the light will remain on as long as the fault condition exists. Retrieve the error codes for diagnosis. This lamp is also known as a malfunction indicator lamp (MIL).
	Cruise Control Engaged (if equipped)	

NOTE: Oil Pressure Warning has moved to the Multi-Function Display (MFD) for MY12. When the ignition is turned on the LO OIL message will be displayed momentarily. THIS IS NORMAL. If the LO OIL message illuminates while the engine is running, turn the engine off as soon as safely possible and check the oil level. *If the oil level is correct and the lamp remains on after the engine is restarted, turn the engine off immediately.*

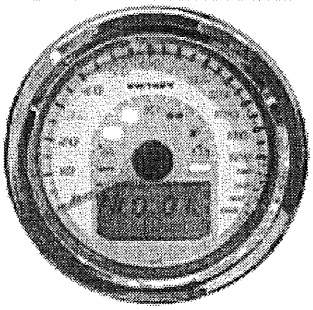

SPEEDOMETER / INSTRUMENTS - CROSS COUNTRY / MAGNUM

INSTRUMENT CLUSTER

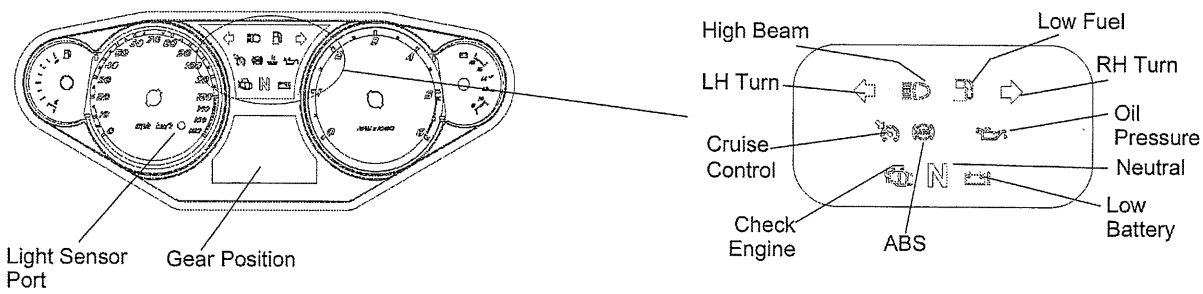

Indicator Lamp Function

Neutral	Illuminates when transmission is in neutral (and Key is in ON or ACC position)
ABS	ABS Indicator always illuminates when key is in the ON position and remains on until the anti-lock system is initiated, which occurs when vehicle speed reaches 6 MPH (10 km/h).
R	On models equipped with reverse, "R" is displayed on the LCD when transmission is in neutral, ignition key is in ON, and Reverse shift lever is in the Reverse position (Up).
6 Gear Position	Victory Motorcycles with a gear indicator display will show two dashes (–) with the clutch disengaged. The gear indicator system uses multiple inputs to show the gear number (1-6).
High Beam	Illuminates when the head lamp switch is set to HIGH BEAM.
Cruise Control	Cruise Control indicator illuminates when cruise control power is ON and a set speed is selected. Review *Cruise Control Safety & Operation* in the Rider's Manual before operating the Cruise Control.
Turn	Flashes left arrow, right, or both (hazard) when turn or hazard is activated. If a turn signal bulb has failed, or if there is a short circuit in the system, turn signal indicator flashes at more than twice the normal rate.

Indicator Lamp Function

Check Engine	The Check Engine Light (Malfunction Indicator Lamp or "MIL") is displayed during a system check. If system sensors report an abnormal condition, the indicator will continue to illuminate as long as the fault condition exists. An error code menu can be viewed on the Information Display by using the MODE button to toggle through the features until "Err" is displayed. Record the information that is displayed (e.g. "Err 3 - 520200") and refer to Trouble Codes, page 5.45 for code conversion. **NOTE** These codes are not stored. The "Err" screen will appear when toggling the display with the MODE button *only* when the Check Engine light is on. If the key is turned OFF, the code and message is lost, but will reappear if the fault is still present after re-starting the engine.
Low Oil Pressure	The Low Oil Pressure indicator illuminates when the ignition switch is in the ON position and the engine is not running. This demonstrates that the indicator circuit is functioning properly. The indicator also illuminates when the engine oil pressure drops below safe operating pressure. If this indicator illuminates while the engine is running, turn the engine off as soon as safely possible and check oil level. If the oil level is correct and the indicator remains illuminated aster the engine is restarted, turn the engine off immediately.
Low Fuel	The Low Fuel indicator illuminates when approximately 1.0 gallons (3.8 liters) of fuel remains in the fuel tank.

MULTI FUNCTION DISPLAY (MFD)

Use the MODE button to toggle through the modes of the MFD. To change display units (metric). Permanent and trip computer modes are described on the following pages.

PERMANENTLY DISPLAYED MODES:

- Clock (A)
- Gear Position (B)
- Ambient Temperature (C)

TRIP COMPUTER (D) MODES*:

- Odometer
- Trip Odometer 1 & 2**
- Average Fuel Economy**
- Average Speed**
- Fuel Range
- Instantaneous Fuel Economy
- Trip Hours Meter**

**Press and hold the mode button to reset.

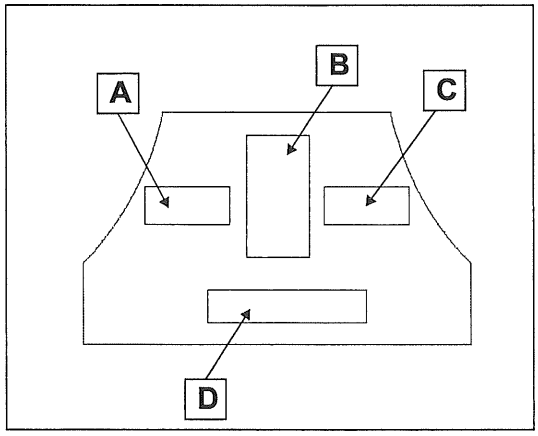

ENGINE ERROR CODES

The error screen displays only when the check engine (MIL) light is on or when it goes on and off during one ignition cycle (key on / key off cycle). Error codes are not stored. When the key is turned off, the code and message is lost, but it will reappear if the fault occurs again after starting the engine.

If the MIL light illuminates, retrieve the error codes from the display or connect Digital Wrench to view historic and current fault codes.

To retrieve error codes from the display:

1. If the error codes are not displayed, use the mode button to toggle until "Err" displays in the clock area.
2. Record the three code numbers displayed in the gear position, temperature, and odometer displays.
3. Refer to Trouble Codes, page 5.45 for a list of codes.

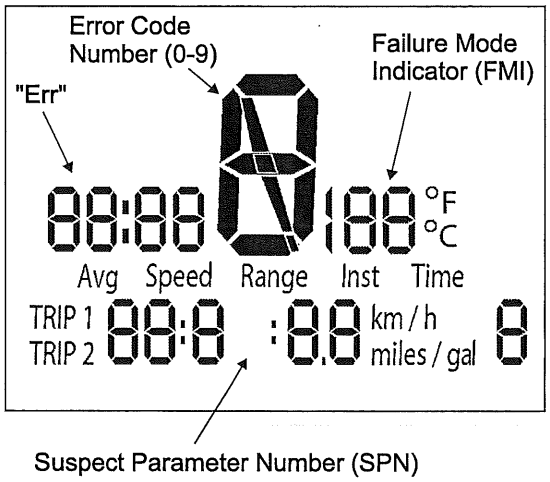

CLOCK

The clock is displayed with the key in the ON or PARK position.

The clock must be reset any time the battery is disconnected or discharged.

To change from 12 hour clock to 24 hour clock.

To set the clock:

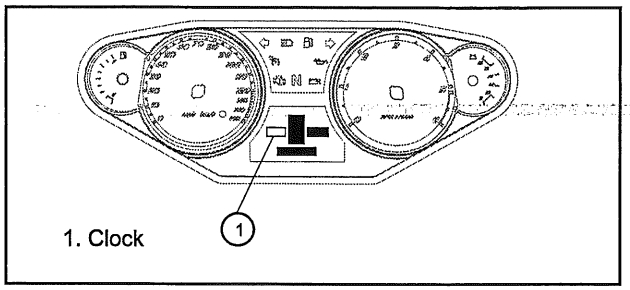

NOTE

If the LOW FUEL light is flashing, the display will not enter the CLOCK SET mode.

Setting the clock:

1. Turn the key to ON or PARK. Use the MODE button to toggle the display to **ODOMETER**.
2. Press and *hold* the MODE button until the hour segment flashes, then release the button.
3. With the segment flashing, tap the MODE button to advance to the desired setting.
4. Press and hold the mode button until the next segment flashes. Release the button.
5. Repeat Steps 3 and 4 twice to set the 10-minute and 1-minute segments. After completing the 1-minute segment, Step 4 will save the new setting and exit the clock mode.
6. Turn the key OFF.

TRIP METER OPERATION

Average speed, average fuel economy, and a trip timer are displayed individually using the MODE button.

To RESET the above items, tap MODE button until desired data item is displayed, then press and HOLD the MODE button until the item resets.

The Trip Timer accumulates time only when the ignition switch is in the ON position.

GEAR POSITION INDICATOR

Victory Motorcycles with a gear indicator display will show dashes (—) if the clutch is disengaged (lever pulled in). The gear indicator system uses multiple inputs to determine which gear has been engaged (1-6, N and R). ALL of the following conditions must be met for gear indicator to function properly.

- Engine is running.
- Vehicle is in motion.
- Vehicle clutch lever is released (clutch engaged).
- Vehicle transmission is in gear 1-6.

ODOMETER

(3) The trip odometer shows total miles traveled since the trip odometer was reset. Use the MODE button to toggle between odometer and trip meter. To reset the trip meter:

- Turn the key ON and toggle to the trip meter to TRIP 1 or 2.
- *Hold* the MODE button until the trip meter resets.
- To change from miles to kilometers.

TEMPERATURE

(4) Current ambient air temperature is displayed with the key in the ON or PARK position.

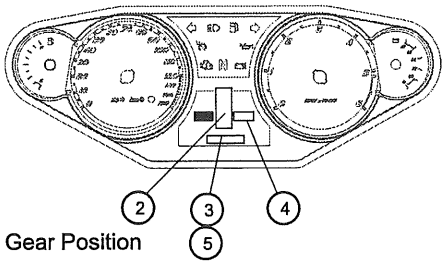

2. Gear Position
3. Trip Odometer
4. Ambient Temperature
5. Odometer

CHANGING INFORMATION DISPLAY UNITS

Standard and Metric Information Display options are available as indicated in the table:

	STANDARD DISPLAY	METRIC DISPLAY
DISTANCE	Mi / Hour	Km / Hour
FUEL UNITS	U.S. Gal	l (Imperial Gallons) or Liters
TEMP	F°	C°
CLOCK	12 Hour	24 Hour

NOTE

To exit set-up mode at any time, wait 10 seconds and display will return to odometer.

1. Turn the key OFF.
   Press and hold the MODE button while turning the key to the ON or PARK position.
2. When the display flashes the DISTANCE setting, tap the mode button to advance to the desired setting.
3. Press and hold the mode button to save the setting and advance to the next display option.
4. Repeat the procedure to change remaining display settings.

CONSOLE SWITCHES (CROSS COUNTRY)

HAND GRIP HEATER SWITCH

Press rocker switch toward Hi or Low position, depending on the amount of heat required. Press rocker switch to middle position to turn grip heaters OFF.

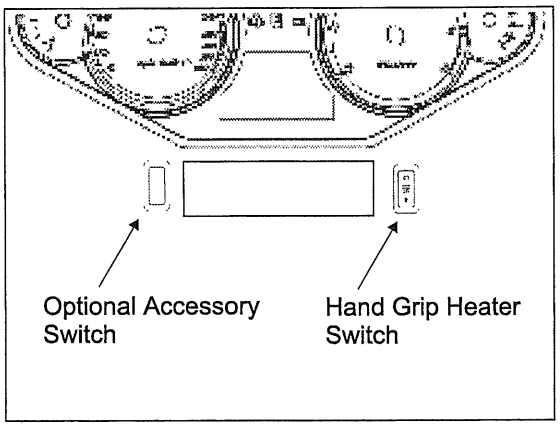

SEAT HEATER SWITCH (CROSS COUNTRY TOUR)

The seat heater switch is located on the left hand side of the seat, midway between the driver and passenger position. The forward toggle switch (D) controls power to the drivers heating element. The rear toggle switch (P) controls the passengers heating element.

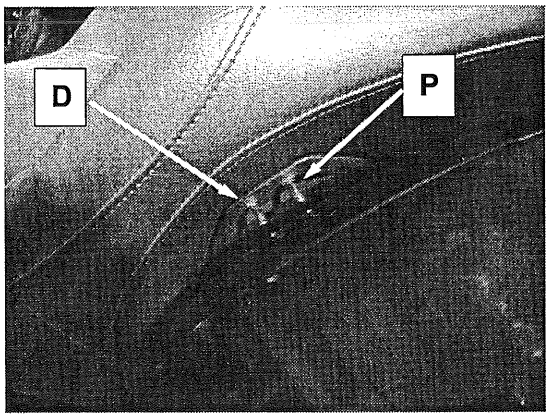

LEFT HANDLEBAR SWITCHES

MODE BUTTON

The MODE button (A) is located on the front side of the left handlebar switch.

The MODE button is used to toggle through the various Information display items available, and to change the display units.

Refer to the individual display feature throughout this chapter for more information.

NOTE

If "Err" is displayed while toggling through the mode features, a system error has been logged in the ECM (the CHK ENG light may or may not be illuminated). Refer to Trouble Codes, page 5.45 for more information.

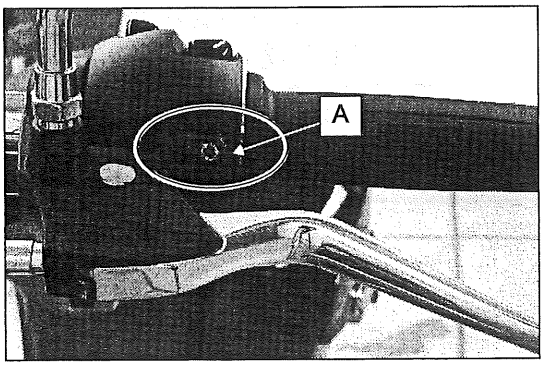

HAZARD SWITCH (EMERGENCY FLASHERS)

The Hazard switch (B) activates and de-activates emergency flashers. When emergency flashers are active, all turn signals flash.

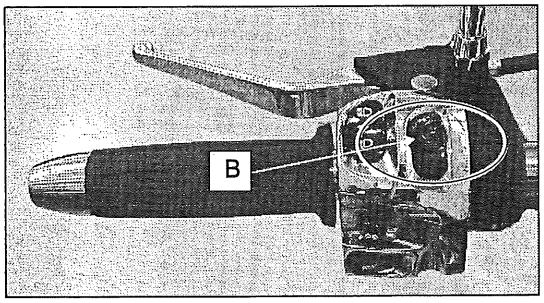

HEADLAMP HIGH / LOW BEAM SWITCH

The headlamp high/low beam switch toggles the headlamp between high and low beam.

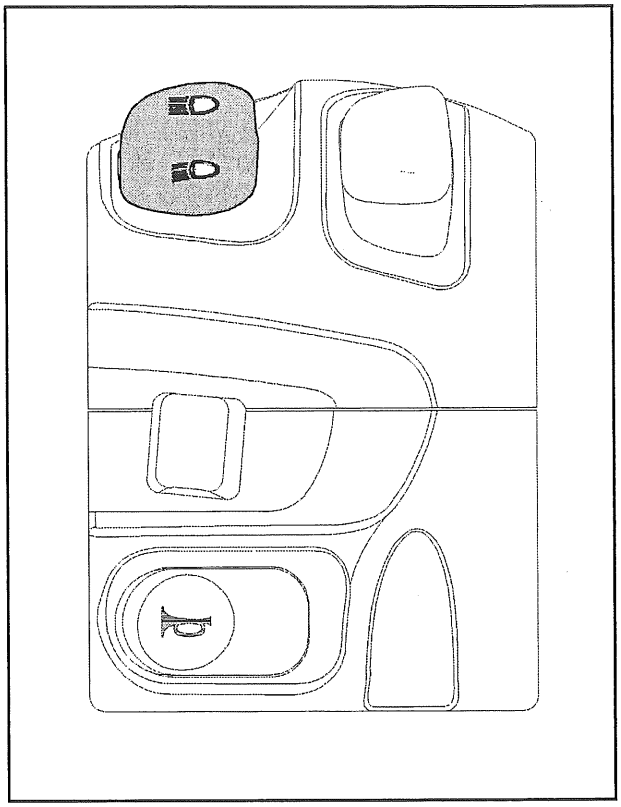

TURN SIGNAL SWITCH

With the ignition key in the ON or PARK position, the turn signal switch will activate the turn signals.

- Push the switch left to activate left turn signals.
- Push the switch right to activate right turn signals.
- To manually cancel either turn signal, push the switch straight in toward housing when the switch is in the center position.

If activated *below* 15mph* (24 kph), the turn signals cancel automatically, shortly after the vehicle speed reaches 15mph. If a signal is activated with vehicle speed above 15 mph, cancellation will occur based on distance traveled.

NOTE: If a signal is activated above 15 mph and vehicle speed drops below 15 mph, cancellation will occur shortly after speed again reaches 15 mph.

* The 15mph speed is approximate.

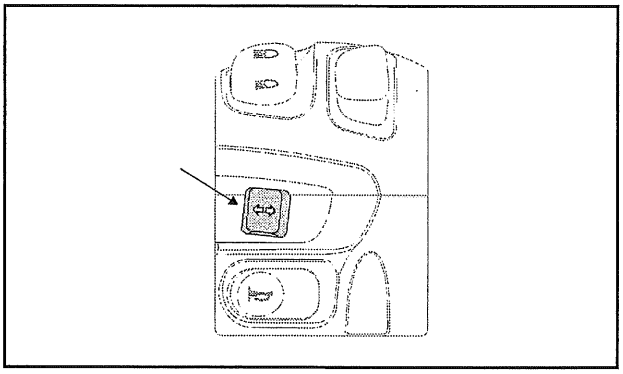

TURN SIGNAL MOMENTARY FEATURE

When passing a vehicle or when changing lanes, you have the option of using the *momentary* feature built in to the turn signal auto-cancel system.

Push the turn signal switch in the direction you wish to turn and hold it in that position for at least 1 second. The momentary feature will activate and the signal will cancel when you release the switch.

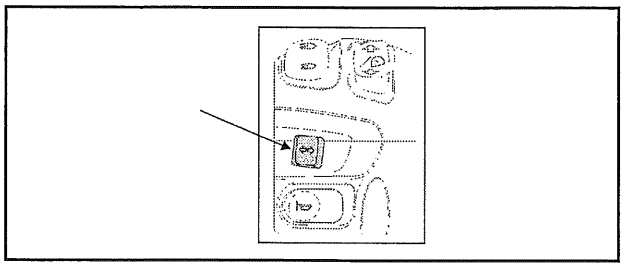

STARTER INTERLOCK

The motorcycle is equipped with a starter interlock switch (A) that prevents the electric starter from operating when the transmission is in gear and the clutch is engaged (lever released), or if the Reverse lever is in the Reverse (Up) position (if equipped).

CAUTION

Never start the motorcycle in gear with the clutch disengaged unless you are properly seated with the front brake applied.

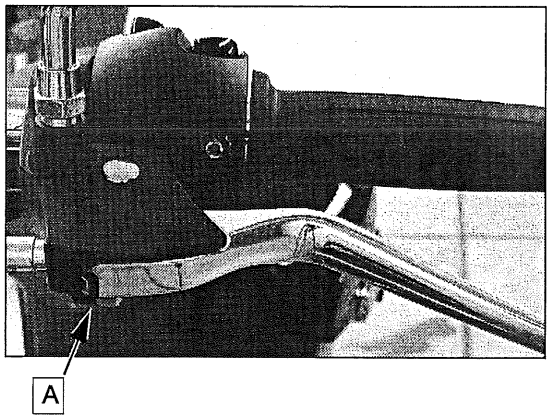

RIGHT HANDLEBAR CONTROLS

ENGINE STOP SWITCH

The engine stop/run switch completes or interrupts the ignition, starter, and fuel pump circuits.

Press RUN side of engine stop/run switch (RUN position indicated below).

Press STOP side of switch to interrupt circuits and stop the engine. The engine should not start or run when the switch is in the STOP position. Use STOP/RUN switch to turn engine off under either normal or emergency conditions. Turn key OFF after the engine stops.

NOTE

The stop switch must be in the RUN position for turn signal operation.

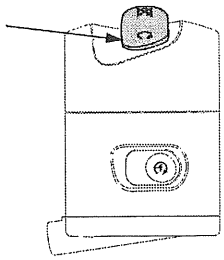

Right Handlebar Switch

ENGINE STARTER BUTTON

The starter button (shown) works only when STOP/RUN switch is in RUN position and transmission is in neutral (or clutch is disengaged).

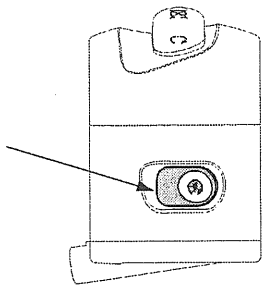

Right Handlebar Switch

FRONT BRAKE LEVER REACH ADJUSTMENT (IF EQUIPPED)

Front brake lever "reach" or distance to the hand grip is adjustable. To adjust the front brake lever reach:

- Pull the lever away from the grip (1) and *hold*.
- Turn dial (2) to align a lower number with arrow (3) on lever to increase lever reach distance.

Turn the dial to align a higher number with the arrow on the lever to decrease reach distance.

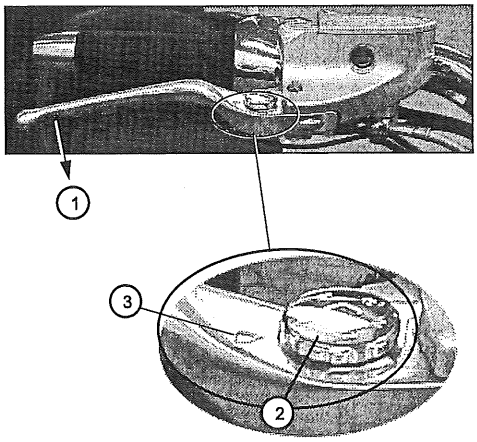

AUDIO / COM / CRUISE CONTROL BUTTONS

The remote audio control buttons (if equipped) are mounted below the LH bar switch. Cruise control buttons (if equipped) are mounted below the RH bar switch. Refer to Electrical Chapter for Audio System and Cruise Control System diagnostic information.

AUDIO SYSTEM - CROSS COUNTRY / CROSS COUNTRY TOUR

RADIO / AUDIO SYSTEMS OPERATION

The following pages describe basic operation and function of various Radio and Audio systems (if equipped) such as AM/FM/WX audio system, CB radio / intercom, SiriusXM® radio, auxiliary and iPod® audio or NAV MP3.

iPod is a registered trademark of Apple Inc.

SiriusXM is a registered trademark of SiriusXM Holdings Inc.

Not all motorcycles are equipped with all components discussed in the audio section of this manual.

Refer to Electrical Chapter for diagnostics.

SOFTWARE UPDATES

Radio system software should be updated annually to ensure the best performance. Refer to for Auxiliary Controller ReprogrammingAudio System Reprogramming (Auxiliary Controller Reprogram), page procedure using Digital Wrench diagnostic software.

RADIO FREQUENCIES

North America

- AM 520 to 1720 kHz
- FM 87.9 to 107.9 MHz
- WX 162.40 to 162.55 MHz

European

- FM 87.5 to 108.00 MHz
- MW 522 to 1602 kHz
- LW 144 to 288 kHz

AUDIO CONTROLS

U.S.A. Sources:

- FM / AM / WX / SiriusXM Radio / AUX (NAV MP3, AUX or iPod)

European Sources:

- FM / MW / LW / AUX (NAV MP3, AUX, or iPod)

Mode Menu Options:

- Bass
- Treble
- Fader
- External Speakers
- Automatic Volume Control (AVC)
- CB Headset ENT Mode
- ICOM Volume
- CB Volume
- CB Local (LO) / Distant (DX)
- AM/FM Clear Preset
- Radio Data System (RDS)
- AUX Mode
- SiriusXM Clear Preset
- SiriusXM Display
- SiriusXM Category

LOWER LEFT HAND CONTROL

Some mode menu options have sub-menus. Sources and menu options will be displayed only for installed components.

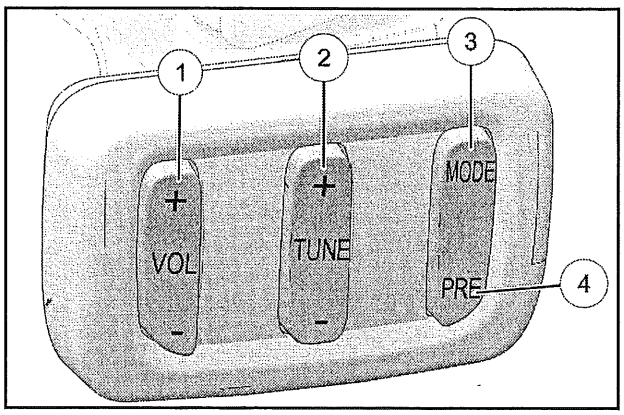

1. **Volume Button (System ON / OFF):** Press VOL (+) to turn the audio system ON. Press VOL (+) to increase audio volume. Press VOL (-) to decrease volume. Press and hold to rapidly increase or decrease volume. When volume is decreased until OFF displays, continuing to press and hold volume (-) for two seconds will turn the radio off.
2. **Tuner Button:** Press and release TUNE (+) or TUNE (-) to change radio stations or iPod tracks. Press and hold to automatically seek.
3. **Mode Button:** Press and hold the MODE button until the system enters the audio system mode menus. Then press and release the MODE button until the desired mode menu displays.
4. **Memory Preset (PRE) Button:** Press PRE to cycle through stored presets.

UPPER LEFT HAND CONTROL*

Operation of the left handlebar CB control is outlined in greater detail on the following pages.

1. **PTT (Push to Talk):** Press and hold top or bottom of PTT button to transmit.
2. **Squelch**: Press SQ (+) or SQ (-) to adjust CB radio channel reception sensitivity.
3. **COM:** Press COM to turn the CB on or off. Press and hold COM to select a COM channel.

4. **ICOM:** Press ICOM to turn the driver/passenger intercom on or off. Press and hold ICOM to access Voice Activated Switch (VOX) settings.

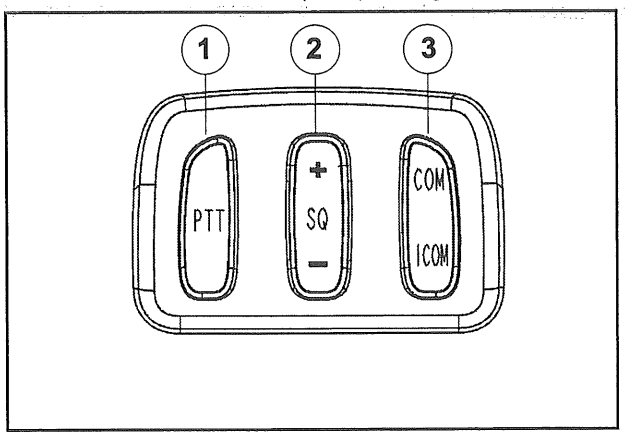

PASSENGER CB CONTROLS

1. **PTT (Push to Talk)**: Press and hold PTT button to transmit.
2. **Rear Volume:** Press (+) or (-) to adjust the rear headset volume.

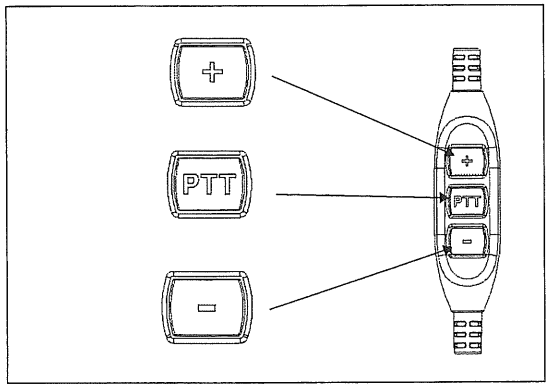

AUDIO SYSTEM POWER

The ignition key must be in the PARK or ON position to use the audio system.

With the key in the PARK or ON position and audio system OFF, the screen will display "VICTORY".

NOTE

To prevent battery drain, do not leave the key in the PARK or ON position for long periods.

Press the VOL (+) button to turn the audio system on.

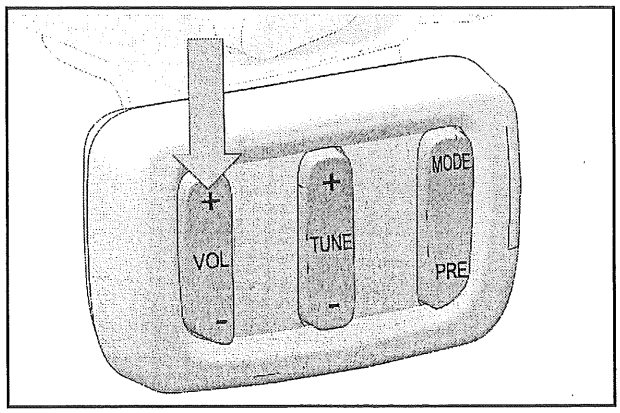

The screen will display the active entertainment source.

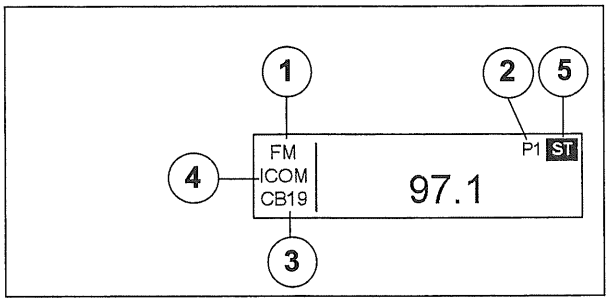

1. Current audio source:
   - (U.S.) FM / AM / WX / iPod - AUX / SiriusXM
   - (Euro) FM / MW / LW / iPod - AUX
2. Station preset number (P1 - P15).
3. CB radio active and active channel (if equipped).
4. Intercom system active (if equipped).
5. Stereo indicator.

NOTE

The audio system will always display the last active source when turned on.

AUDIO VOLUME CONTROL

The driver can adjust volume for the speakers and turn the speakers on and off.

Press and release VOL (+) or VOL (-) to raise or lower volume.

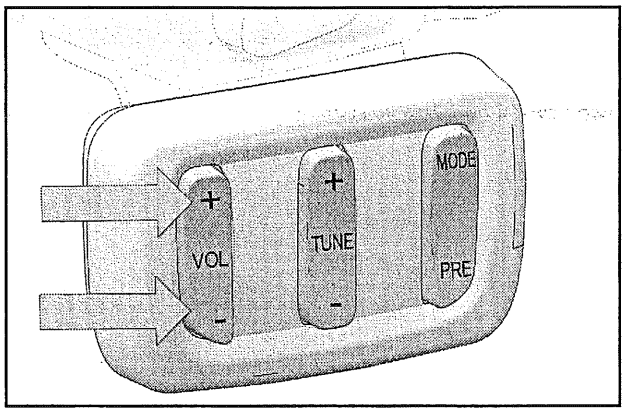

AUDIO SOURCE SELECTION

Press and release the MODE button until the desired source is active.

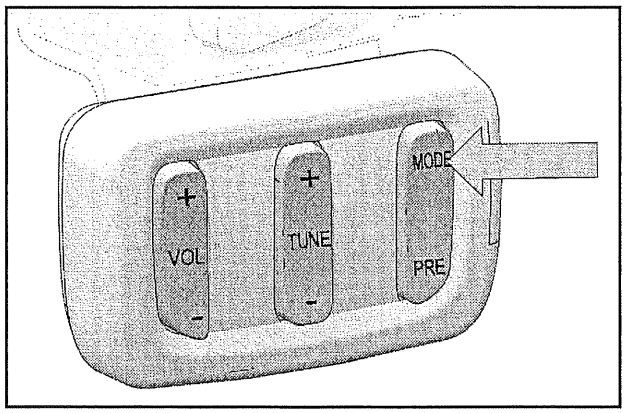

FM SOURCE ACTIVE

FM	97.1 ST

U.S. / European models

AM SOURCE ACTIVE

AM	1130

U.S. models only

WX (WEATHER) SOURCE ACTIVE

WX	3

U.S. models only

NAV MP3 SOURCE ACTIVE

AUX	NAV MP3

U.S. / European models

IPOD SOURCE ACTIVE

iPod	Artist Title Playlist

U.S. / European models
(skipped if not equipped)

AUX SOURCE ACTIVE

AUX	AUX

U.S. / European models

SIRIUSXM RADIO SOURCE ACTIVE

XM	CH25 P6 TheBlend Sting Fields of Gold

U.S. / European models
(skipped if not equipped)

MW (MEDIUM WAVE) SOURCE

P1
531

European models only

LW (LONG WAVE) SOURCE

P1
144

European models only

AUDIO TUNING

Use the tuner on the left control to select radio stations.

Press and release TUNE (+) or TUNE (-) to locate stations in single-step increments.

Press and hold TUNE (+) or TUNE (-) to SEEK for stations.

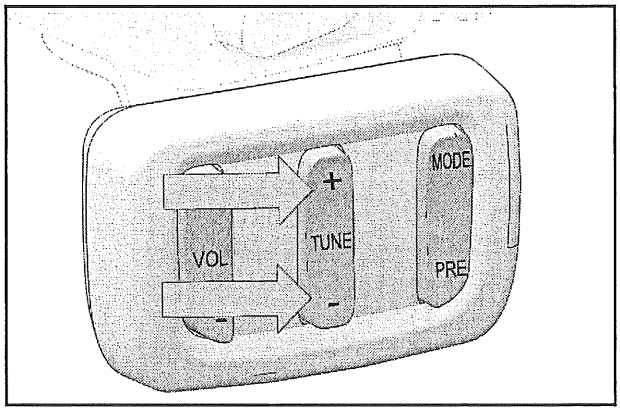

MEMORY PRESETS

The audio system features 15 user-defined presets for storing favorite stations.

To set a preset, press and release the MODE button until the desired source is active (FM, AM, WX, SiriusXM, MW, LW).

Use TUNE or seek to locate a radio station.

Press and *hold* the PRE button.

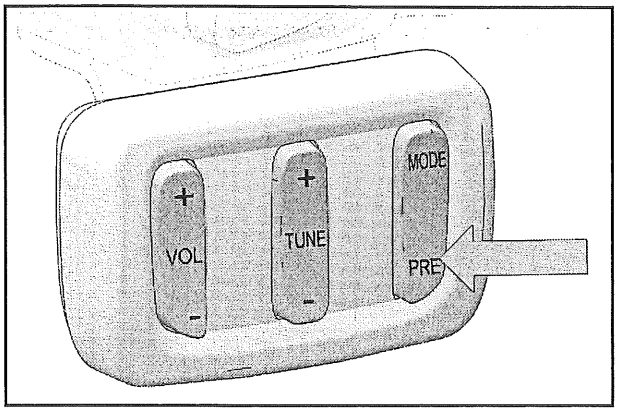

Use TUNE (+) and TUNE (-) to cycle to an available preset location. The preset location displays on the screen.

Station being stored

\+ TUNE - 100.5 P1 ---.-

When the desired location is displayed, press and hold the PRE button to store the selected radio station. If the desired preset location already contains a stored radio station, it will be overwritten by the new selection.

\+ TUNE - 100.5 P1 97.1

Station will be overwritten

Wait 5 seconds or push VOL (+) or VOL (-) to exit.

To listen to a preset location, press and release the PRE button until the desired location displays.

AUDIO MODE MENUS

Entering Mode Menus

Press and hold the MODE button until the system enters the audio system mode menus. Then press and release the MODE button until the desired mode menu displays.

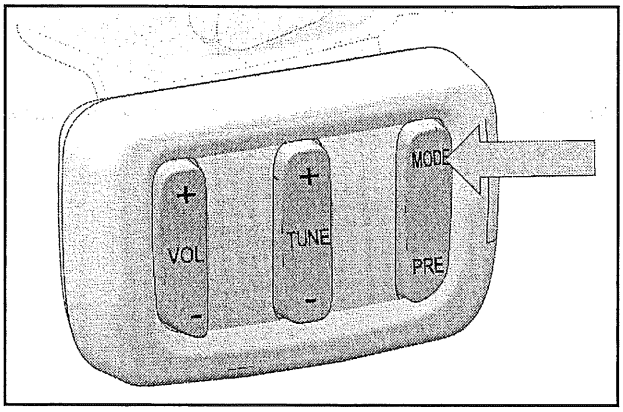

Exiting Mode Menus

Exit the screen and return to the default display in one of two ways.

1. Wait 5 seconds. The system will automatically exit.
2. Press VOL (+) or VOL (-) (the volume will also change).

BASS SETTING MODE

Press TUNE (+) or TUNE (-) to adjust.

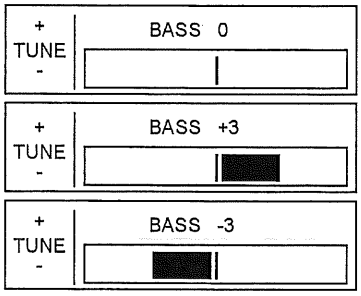

TREBLE SETTING MODE

Press TUNE (+) or TUNE (-) to adjust.

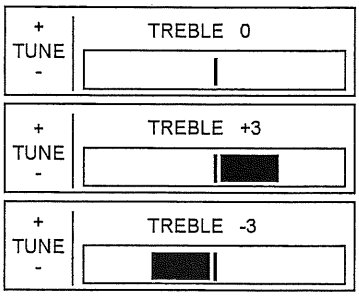

FADER SETTING MODE

Press TUNE (+) or TUNE (-) to adjust.

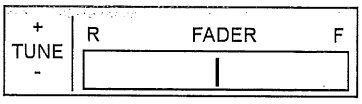

EXTERNAL SPEAKERS MODE

Press TUNE (+) or TUNE (-) to adjust.

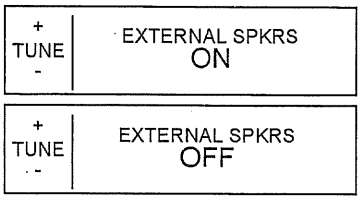

AUTOMATIC VOLUME CONTROL (AVC) MODE

Whén set, this feature will lower or raise the speaker / headset volume automatically, based on vehicle speed.

Press TUNE (+) or TUNE (-) to adjust.

- AVC Off = No AVC. Volume will not adjust.
- AVC Low = Least aggressive AVC setting.
- AVC Medium = Moderate AVC setting.
- AVC High = Most aggressive AVC setting.

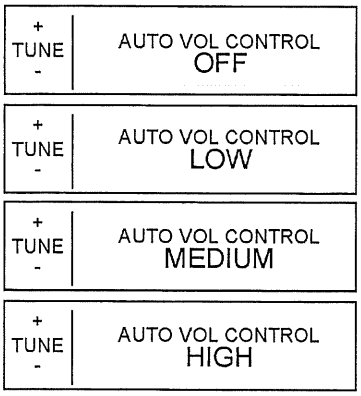

CB HEADSET VOLUME CONTROLS MODE (IF EQUIPPED)

The headsets have 3 separate volume settings: Intercom (ICOM) volume, CB receive volume, and entertainment (ENT) volume. Always position headsets with the speakers directly over your ears to ensure the best sound quality and volume.

NOTE

The driver can turn off the external speakers and listen to audio only through the headsets (See External Speakers).

ITEM	CAN BE ADJUSTED / DRIVER CONTROLS	PASSENGER CONTROLS
ENT Volume	While listening to ENT / Press VOL (+) or VOL (-) on the left control.	Press (+) or (-) on the headset control cord.
ICOM Volume	When VOX is in use / Press VOL (+) or VOL (-) on the left control.	
CB Receive Volume	When receiving a CB transmission / Press VOL (+) or VOL (-) on the left control.	

CB HEADSET ENT MODE (IF EQUIPPED)

Press the hand control TUNE (+) or (-) button to set the CB Headset ENT settings.

+ TUNE -	HEADSET ENT MODE OFF
+ TUNE -	HEADSET ENT MODE MIX
+ TUNE -	HEADSET ENT MODE MUTE

OFF: Only communications are audible in the headsets. Riders can listen to navigation commands and entertainment with the external speakers while reserving the headset for communication.

MIX: The audio source volume drops lower than the ICOM volume whenever the voice operated switch (VOX) is opened. The audio source volume gradually returns to its original level after the VOX is closed.

MUTE = The audio source volume is muted when the VOX is opened. The audio source volume gradually returns to its original level once the VOX is closed.

DRIVER ICOM VOLUME MODE

Press TUNE (+) or TUNE (-) to adjust.

+ TUNE -	ICOM VOL 15 [redacted]

DRIVER CB VOLUME MODE

Press TUNE (+) or TUNE (-) to adjust.

+ TUNE -	CB VOL 15 [redacted]

CB LO/DX MODE

Press TUNE (+) or TUNE (-) to change settings.

+ TUNE -	CB LO / DX MODE DISTANT
+ TUNE -	CB LO / DX MODE LOCAL

RADIO DATA SYSTEM (RDS) MODE

Press TUNE (+) or TUNE (-) to turn RDS on, full, or off. When ON, the screen will display the 8 character station identification in the upper left of the display. When turned to FULL, the screen will display the 8 character station identification in the upper left of the display plus the extended station information such as artist and song title in the center of the display (if available in the radio signal you are receiving).

+ TUNE -	RDS ON
+ TUNE -	RDS FULL
+ TUNE -	RDS OFF

AUX MODE

Press TUNE (+) or TUNE (-) to choose AUX (for iPod or any other MP3 player) or NAV MP3 for navigation unit MP3 player use.

NOTE

NAV MP3 mode will override any device connected with an input cable. If using NAV MP3 mode, always pause the Garmin unit before changing sources. Otherwise, music from the NAV unit will interrupt the new source, interpreting it as navigation commands, not music.

+ TUNE -	AUX MODE AUX
+ TUNE -	AUX MODE NAV MP3

SIRIUSXM DISPLAY MODE*

Press TUNE (+) or TUNE (-) to set the screen to display channel name or category when the SiriusXM radio is active.

+ TUNE -	XM DISPLAY CHANNEL NAME
+ TUNE -	XM DISPLAY CATEGORY

*This menu item is skipped when SiriusXM radio is not present.

SIRIUSXM CATEGORY MODE*

Press TUNE (+) or TUNE (-) to set the music selection category when tuning SiriusXM.

These categories are downloaded from SiriusXM whenever the SiriusXM antenna is receiving a signal and may change from time to time.

+ TUNE -	XM CATEGORY All Channels
+ TUNE -	XM CATEGORY MorMusic
+ TUNE -	XM CATEGORY Traffic

NOTE

Selecting a category will then limit the channels available to those within that category until ALL CHANNELS or another category is selected.

*This menu item is skipped when SiriusXM radio is not present.

NOAA WEATHER BAND (WX)

Weather band channels are broadcast by the National Oceanic and Atmospheric Administration (NOAA). NOAA operates more than 940 transmitters covering the United States, Puerto Rico, the U.S. Virgin Islands, U.S. Pacific Territories, and adjacent coastal waterways.

Typically, only one weather band channel will be available for a given location. When traveling, if a channel becomes unavailable, search for another active channel.

Press and release the MODE button until WX is the active source.

WX	3

When the WX source is selected, a total of 7 weather band channels are available.

Press TUNE (+) or TUNE (-) to access a channel.

WX Channels

WX CH.	FREQ.
1	162.400
2	162.425
3	162.450
4	162.475
5	162.500
6	162.525
7	162.550

CB RADIO / ICOM SYSTEM

INTRODUCTION - CB RADIO FCC RULES

In the U. S. A., refer to the Federal Communications Commission (FCC) Plain Rules pamphlet accompanying the CB/ICOM kit for a comprehensive guide of citizens band (CB) radio rules and regulations.

HEADSET USE

The use of helmet-mounted headsets may be restricted or prohibited in some areas. Always obey all applicable regulations and laws.

The headsets have three separate volume settings: Intercom (ICOM) volume, CB receive volume and entertainment (ENT) volume.

GETTING STARTED - CB / ICOM

NOTE

To minimize distractions while riding, always make adjustments to the CB/ICOM system prior to operating the motorcycle.
To prevent battery drain, do not leave the key in the PARK or ON position for long periods.

The ignition key must be in the PARK or ON position to use the audio system.

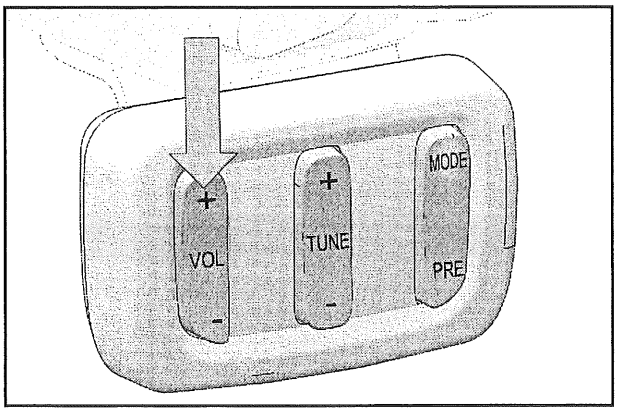

Press the VOL (+) button to turn the audio system on.

Press **COM** on the upper left handlebar control to activate the CB-COM system.

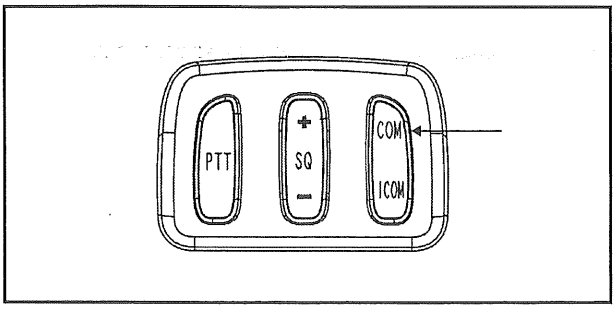

CB CHANNELS

When the CB radio system is active, "CB" and the active channel will display.

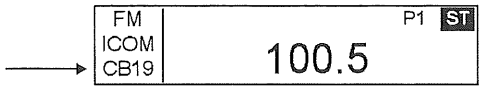

Press and hold **COM** on the upper LH control to access the **CHANNEL ADJUST** screen.

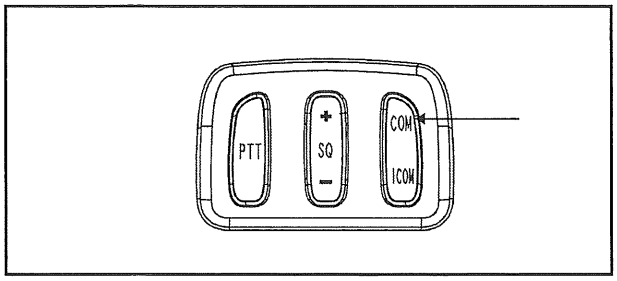

Push **COM** or **ICOM** on the left control to change channels.

COM +/- ICOM	CHANNEL ADJUST CB 19

NOTE

Changing to a new channel may require changing the squelch setting.

Wait 5 seconds or push VOL (+) or VOL (-) to exit the **CHANNEL ADJUST** screen and return to the main display.

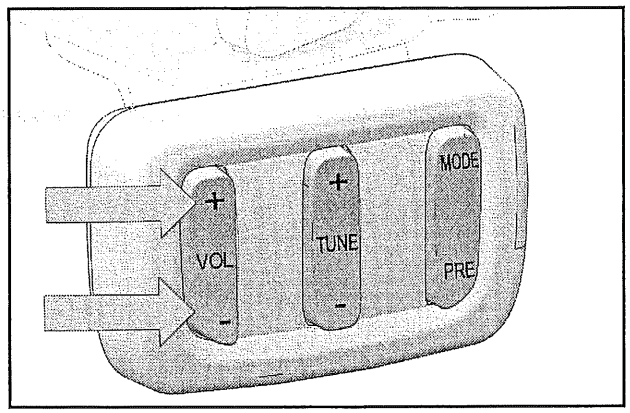

PUSH-TO-TALK (PTT)

Driver - Press and hold the top or bottom of the PTT button on the upper LH control to transmit over CB radio.

Passenger - The passenger must push and hold the PTT button on the headset controls.

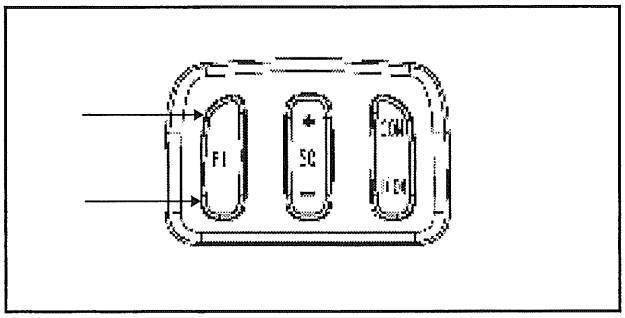

NOTE

PTT will activate the intercom when the intercom is turned on and the CB is turned off.

"**TX**" will display on the screen when one of the **PTT** buttons is pressed.

"**RX**" will display when the CB is receiving a transmission.

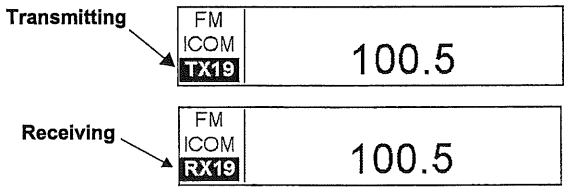

SQUELCH

Squelch blocks undesired signals and noise by allowing the reception of signals only over a specified level.

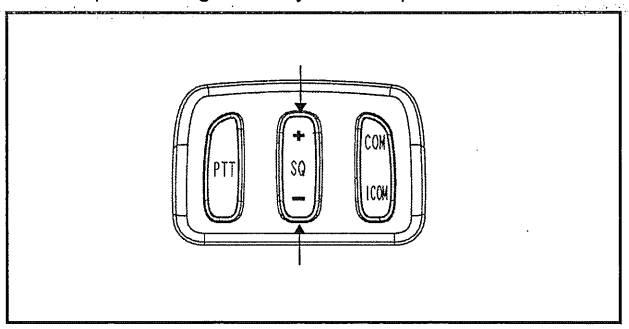

Press and release the **SQ (+)** or **SQ (-)** buttons to adjust the squelch level to any level between OPEN and CLOSED.

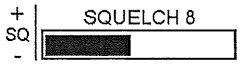

When squelch is set to **OPEN**, no filtering occurs. Setting squelch to **CLOSE** blocks all signals, including strong signals.

To set the squelch level, first lower the squelch level until noise or static is audible.

Gradually increase the squelch level until the noise or static is gone.

CB / ICOM System (Cont.)

CB RADIO VOLUME SETTING (DRIVER)

To change settings, enter the mode menu and toggle to the CB VOL display.

Press TUNE (+) or TUNE (-) to adjust settings.

NOTE

The CB volume can also be set using the hand control (VOL +/-) when the CB is receiving.

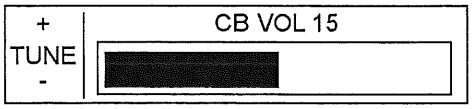

CB RADIO VOLUME SETTING (PASSENGER)

The passenger can control rear headset volume when the Entertainment, CB radio or ICOM is active.

Press **(+)** or **(-)** on the headset control to raise or lower volume.

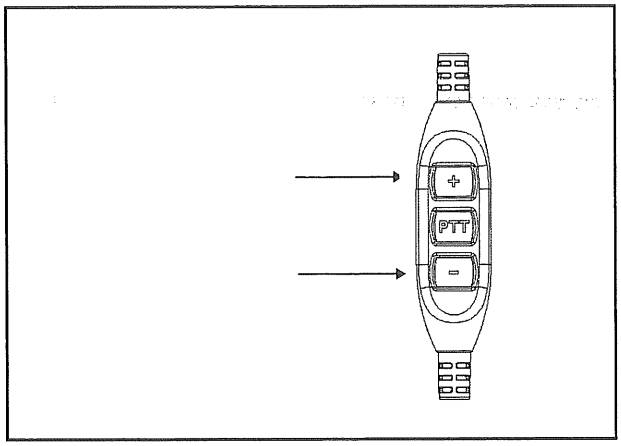

CB LO/DX

To change settings, enter the mode menu and toggle to the CB LO/DX mode display.

Press TUNE (+) or TUNE (-) to set the CB to **LOCAL (LO)** or **DISTANT (DX)** mode.

+ TUNE -	CB LO / DX MODE DISTANT

+ TUNE -	CB LO / DX MODE LOCAL

Distant: Use this setting for weaker signals. Receiver sensitivity will be increased. Static and noise levels are increased.

Local: Use this setting for stronger signals or in high density areas. Receiver sensitivity will be decreased. Static and noise levels are decreased.

CB FREQUENCIES

The FCC has designated 40 citizen band (CB) channels for consumer use.

NOTE

Channel 9 is designated as an EMERGENCY channel for emergency use only.

CB Channels / Frequencies

CH.	FREQ.	CH.	FREQ.	CH.	FREQ.
1	26.965	8	27.055	15	27.135
2	26.975	9	27.065	16	27.155
3	26.985	10	27.075	17	27.165
4	27.005	11	27.085	18	27.175
5	27.015	12	27.105	19	27.185
6	27.025	13	27.115	20	27.205
7	27.035	14	27.125	21	27.125
22	27.225	31	27.315	40	27.405
23	27.255	32	27.325		
24	27.235	33	27.335		
25	27.245	34	27.345		
26	27.265	35	27.355		
27	27.275	36	27.365		
28	27.285	37	27.375		
29	27.295	38	27.385		
30	27.305	39	27.395		

ICOM SYSTEM

Press and release ICOM on the upper LH control to activate the intercom system.

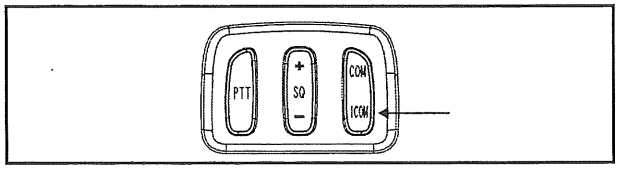

When the intercom system is active, **ICOM** will be displayed on the screen.

FM ICOM CB19	92.5

VOX BREAK SETTING

The intercom is opened and closed using a voice operated switch (VOX). The volume sensitivity level required to open the intercom can be adjusted using the VOX sensitivity setting.

Press and hold **ICOM** on the upper LH control to access the **VOX** sensitivity set screen.

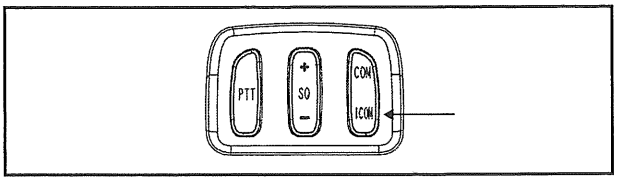

Push **COM** or **ICOM** to adjust the sensitivity setting.

Lower settings require less volume to open the intercom.

If wind or ambient vehicle noise trigger the **VOX** to open, set the **VOX** sensitivity to a higher level.

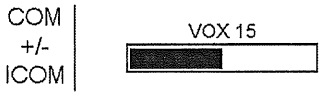

"**VOX**" will be display on the screen whenever the driver or passenger are communicating over the intercom system.

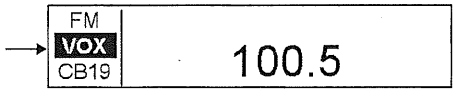

ICOM VOLUME SETTING (DRIVER)

To change settings, enter the mode menu and toggle to the ICOM VOL mode display.

Press TUNE (+) or TUNE (-) to adjust settings.

Intercom volume can be adjusted with the hand control when the VOX circuit is open.

ICOM VOLUME SETTING (PASSENGER)

Press **(+)** or **(-)** on the headset control to raise or lower volume.

AUX / IPOD

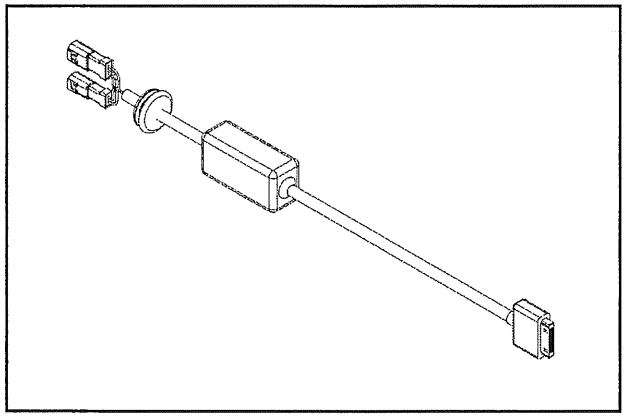

INPUT CABLE SETUP

The AUX and iPod input cables are connected to the audio system via an (accessory) extension cable leading from the fairing area to the right saddlebag. An accessory iPod pouch may also be installed in the saddlebag to hold the iPod unit.

Only one input cable (either AUX or iPod) can be connected at any given time.

The AUX harness uses one of the two connectors on the input cable; an iPod uses both of the connectors.

To connect a device:

1. Locate the input cable in the right saddlebag.
2. Remove the protective cap and connect either the AUX lead or the iPod leads. Be sure the connector snaps together securely.
3. If using the AUX connector, be sure to install the protective cap on the unused connector.
4. Set the active source to AUX or iPod.

   To change or disconnect an input cable:
5. Disconnect the cable from the device by carefully pushing down on the locking tab and pulling gently to separate the connector.
6. Install the protective cap(s).

IPOD USE

The ignition key must be in the PARK or ON position to use the AUX / iPod function.

NOTE

To prevent battery drain, do not leave the key in the PARK or ON position for long periods.

Press the VOL (+) button to turn the audio system on.

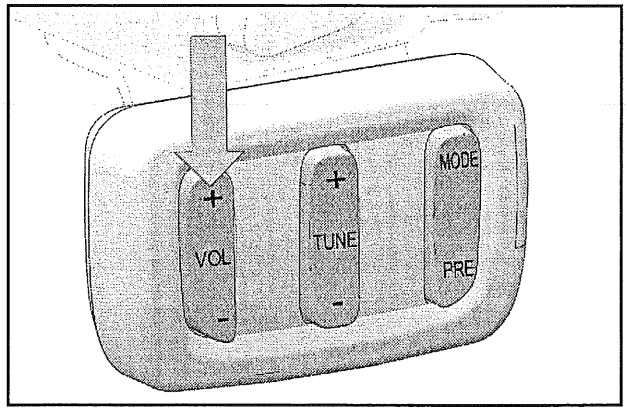

Press and *hold* MODE to enter the settings menu.

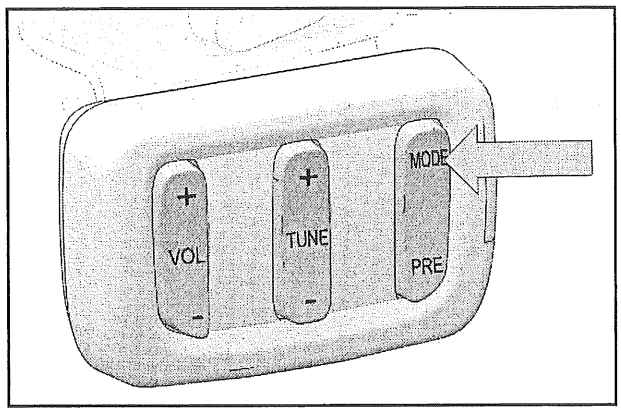

Use the TUNE + / - button to change the mode to AUX (for iPod or any other MP3 player use) or to NAV MP3 to use the MP3 player feature of the navigation unit.

NOTE

NAV MP3 mode will override any device connected with an input cable in the right saddlebag.

To use an MP3 player or an iPod

+ TUNE -	AUX MODE AUX
+ TUNE -	AUX MODE NAV MP3

To use the MP3 function of the NAV unit (if equipped).

When AUX is active, the screen will display "AUX" as the active source.

AUX	AUX

When iPod is active, the screen will display the iPod as the active source and iPod information in the display screen.

iPod ICOM CB19	Artist Song Title Playlist

IPOD PLAY LISTS

NOTE

Generic MP3 players can play music, but cannot be controlled though the audio system (for example, selecting tracks or playlists).

To browse tracks by artist, playlist or album, press and hold the PRE button to bring up the selection screen.

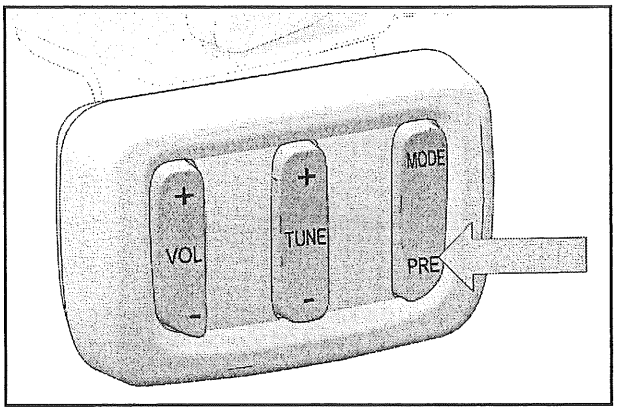

Press TUNE (+) or TUNE (-) to highlight the desired category.

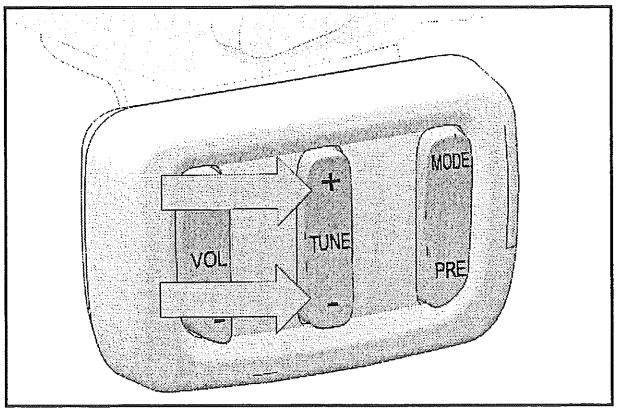

Press and release the PRE button to bring up the items in the selected category. When a category is selected, a list of items in that category are displayed with the active track highlighted.

+ TUNE -	My Top Rated **Road Tunes 2** 80's Music

IPOD SONG CONTROL

Press and release TUNE (+) or TUNE (-) to change tracks in the currently selected playlist.

Press and *hold* TUNE (+) or TUNE (-) to fast-forward or fast-reverse in the currently playing song.

NOTE
Generic MP3 players can play music, but cannot be controlled though the audio system (for example, selecting tracks or playlists).

A quick double-press and release (double click) of the TUNE (+) or TUNE (-) button will bring up a list of songs in the currently selected playlist.

+	Brown Sugar
TUNE	Gimme Shelter 2
-	Honky Tonk Woman

Use TUNE (+) or TUNE (-) to scroll through this song list. The selected song will be highlighted on the center line of the display. Press and release the PRE button to select and play the highlighted song, or press and release the MODE button to exit without selecting a new song.

XM RADIO

ABOUT SIRIUSXM RADIO

For more information, or to subscribe, U. S. customers visit xmradio. com or call SiriusXM Listener Care at 1-800-XMRADIO (1-800-967-2346); Canadian customers visit xmradio. ca or call SiriusXM Listener Care at 1-877-GETXMSR (1-877-438-9677).

GETTING STARTED - SIRIUSXM RADIO

The ignition key must be in the PARK or ON position to use the SiriusXM radio.

NOTE

To prevent battery drain, do not leave the key in the PARK or ON position for long periods.

Press VOL (+) to turn the audio system on.

Press and release the MODE button until the SiriusXM radio is the active source.

→ XM

When the SiriusXM Radio is active, the screen will display radio channel number, preset number (if applicable), the channel name or category, the artist, and song title.

→ XM | CH55 P2 CAT ROCK
Artist
Song Title

SIRIUSXM RADIO RECEPTION

If SiriusXM radio is not receiving a signal due to being indoors (or any overhead obstruction) "No Sgnl" appears in the display.

XM | CH55 → No Signl

If the SiriusXM antenna becomes disconnected, "Antenna" appears in the display.

XM | → Antenna

SIRIUSXM RADIO MENU OPTIONS

The SiriusXM radio system has unique menus that apply only to this system when SiriusXM radio is the active source.

Some Audio System settings such as BASS, TREBLE, FADER, etc., apply to both the audio system and the SiriusXM radio system.

Menus specific to the SiriusXM radio system are:

SiriusXM Display (You can select CATEGORY or CHANNEL

NAME to be displayed)

SiriusXM Category (Rock, Country, Traffic, Sports, Talk News,

All Channels, etc.)

SIRIUSXM RADIO SETTINGS

To access SiriusXM specific menus, turn the audio system power ON (using VOL (+) button) and change the active source to SiriusXM (press and release the MODE button until SiriusXM is active).

Press and hold the MODE button until the system enters the audio system mode menus. Then press and release the MODE button repeatedly to toggle to the SiriusXM DISPLAY menu.

Press TUNE (+) or TUNE (-) to select CATEGORY or CHANNEL NAME.

+ TUNE -	XM DISPLAY CHANNEL NAME

+ TUNE -	XM DISPLAY CATEGORY

In the CATEGORY mode, the category of a selected station will display in the upper right corner of the screen.

XM ICOM CB19	CH55 P2 CAT ROCK ← Artist Song Title

In CHANNEL NAME mode, the name of the selected channel will display.

XM ICOM CB19	CH55 CH Name ← Artist Song Title

SIRIUSXM CATEGORY SELECTION

With SiriusXM as the active source, use the MODE button to scroll to the SiriusXM Category menu.

Press TUNE (+) or TUNE (-) button on the left control to change the category.

+ TUNE -	XM CATEGORY ALL CHANNELS

SIRIUSXM CHANNEL SELECTION

Press TUNE (+) or TUNE (-) button on the left control to change the channel.

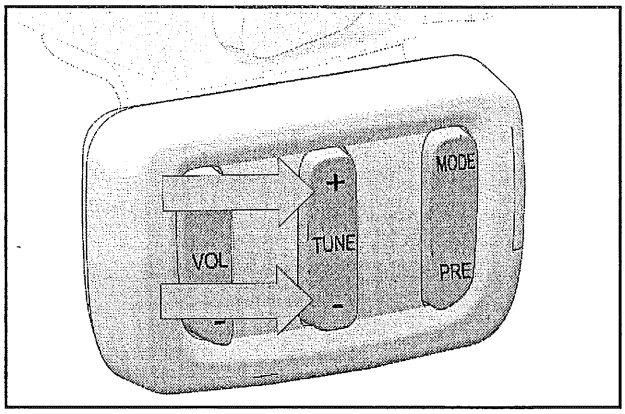

The ALL CHANNELS category must be selected to scroll through every available channel in numerical order.

If a specific category (other than ALL CHANNELS) is selected, only channels within that category will be selected with the TUNE button.

NOTE

If a Preset button is used to select a channel that is not within the currently selected category and the TUNE + / - button is used to change the channel, it will tune stations within the previously selected category, not within the category of the Preset station.

EXAMPLE:

Country is the selected category.

Preset 6 is used to switch to a channel within the Rock category.

Pressing TUNE + / - on the lower left control will continue to only select stations available in the Country category.

SIRIUSXM RADIO WIRING DIAGRAM

XM™ Radio Connector Map

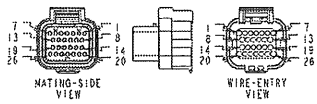

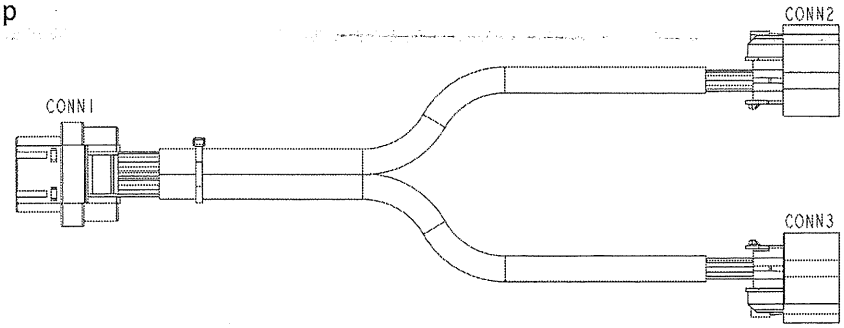

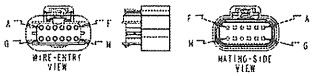

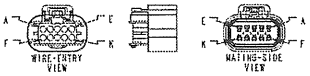

CONN 1

POS	SIGNAL	COLOR	ITEM
1	CB +12VSW	RED	12
2	CB CAN HIGH	YELLOW	14
3	CB GROUND	RED/BLACK	19
4	CB LINE OUT LEFT +	WHITE	21
5	CB LINE OUT RIGHT +	WHITE/BLACK	22
6	N/C	-	10
7	XM ENT -	BROWN/BLACK	28
8	CB +12VSW	BLUE	16
9	CB CAN LOW	YELLOW/BLACK	23
10	CB GROUND	BLUE/BLACK	25
11	N/C	-	10
12	N/C	-	10
13	N/C	-	10
14	XM +12VSW	RED	13
15	XM CAN LOW	YELLOW/BLACK	24
16	XM GROUND	RED/BLACK	26
17	CB LINE OUT -	BROWN	18
18	XM ENT RIGHT +	GREEN/BLACK	29
19	XM ENT LEFT +	GREEN	27
20	XM +12VSW	BLUE	13
21	XM CAN HIGH	YELLOW	15
22	XM GROUND	BLUE/BLACK	26
23	N/C	-	10
24	N/C	-	10
25	N/C	-	10
26	N/C	-	10

CONN 2

POS	SIGNAL	COLOR	ITEM
A	CB CAN HIGH	YELLOW	14
B	CB GROUND	RED/BLACK	19
C	CB +12VSW	RED	12
D	CB LINE OUT LEFT+	WHITE	21
E	CB LINE OUT-	BROWN	18
F	CB LINE OUT RIGHT+	WHITE/BLACK	22
G	CB CAN LOW	YELLOW/BLACK	23
H	CB GROUND	BLUE/BLACK	25
J	CB +12VSW	BLUE	16
K	N/C	-	8
L	N/C	-	8
M	N/C	-	8

CONN 3

POS	SIGNAL	COLOR	ITEM
A	XM CAN HIGH	YELLOW	15
B	XM GROUND	RED/BLACK	20
C	XM +12VSW	RED	13
D	XM ENT-	BROWN/BLACK	28
E	XM ENT RIGHT+	GREEN/BLACK	29
F	XM CAN LOW	YELLOW/BLACK	24
G	XM GROUND	BLUE/BLACK	26
H	XM +12VSW	BLUE	17
J	N/C	-	8
K	XM ENT LEFT+	GREEN	27

XM™ Radio Harness Wiring Diagram

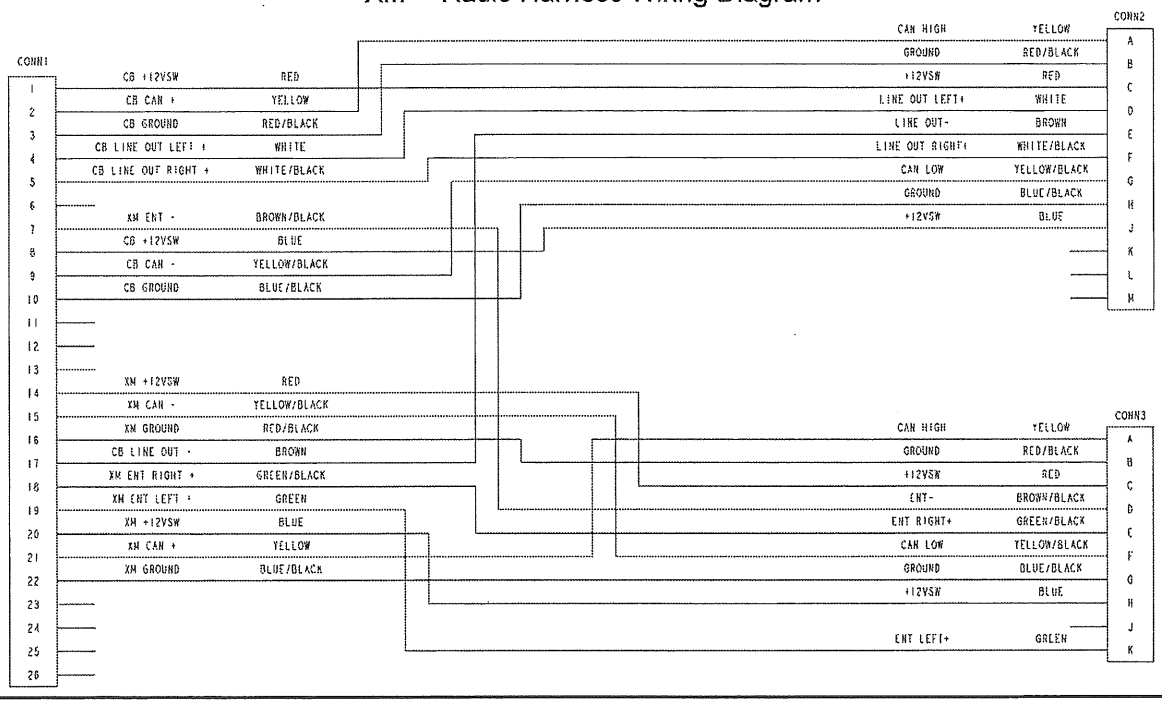

NAV MP3

BEFORE YOU BEGIN - NAV MP3

Here are a few helpful tips for motorcycles equipped with the Garmin® zumo® 660 NAV MP3 player and the Audio Integration Kit.

- Be sure to read the Owner's Manual and all information included with your Garmin® zumo® 660 to become familiar with the operation of and access to all available features.
- The Audio Integration kit must be installed to enable outputs from the NAV MP3 (such as navigation instructions or user-loaded MP3 media files) to play through the headsets or the speakers.
- The NAV MP3 unit is fully functional without the Audio Integration kit installed, but there will be no interface with the audio system on the motorcycle.
- Review general Audio system operation information beginning in RADIO / AUDIO SYSTEM.

TIPS FOR NAV MP3 OPERATION

Signal Priority

- Signals coming from the NAV MP3 unit will override any source of the motorcycle's audio system to ensure navigation instructions are communicated when needed. Navigational instructions will also override the MP3 player.

Volume Settings - IMPORTANT!

- You must set volume levels within the NAV MP3 unit. Volume settings in the motorcycle's audio system control NAV MP3 volume, but navigation instructions may be difficult to hear if volume levels in the unit are set too low. See the GARMIN information for setting procedures.

Recommended initial setting are 100/80/80:

MASTER - 100%

NAVIGATION - 80%

MEDIA - 80%

To switch to the radio when the MP3 player is in use:

- Pause or stop the MP3 player to switch to radio.

To switch from radio to the MP3 player:

- Change the active source to AUX.
- For best sound quality, change the AUX MODE setting on the radio to NAV MP3 when listening to the MP3 player in the NAV unit. Audio works in the AUX setting, but the levels are not optimized.
- Refer to *Getting Started* (below) for instructions on how to change the active source to AUX and the AUX Mode to NAV MP3.
- If playing MP3 files from the Garmin® zumo® 660 unit, you may need to turn down the "MEDIA VOLUME" on the Garmin unit to avoid distortion.

GETTING STARTED - NAV MP3

The ignition key must be in the PARK or ON position to use the NAV MP3 player.

NOTE

To prevent battery drain, do not leave the key in the PARK or ON position for long periods.

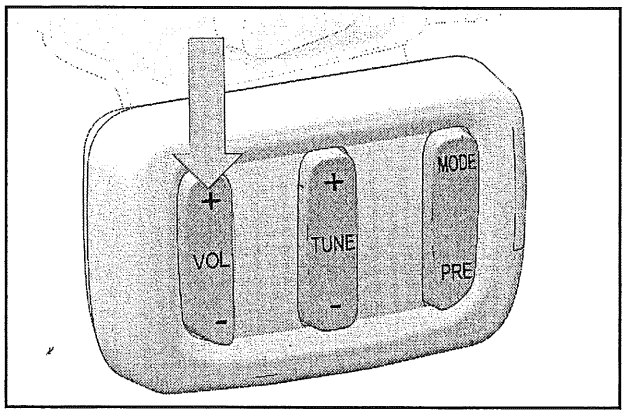

Press the VOL (+) button to turn the audio system on.

Press and release the MODE button until AUX is the active source.

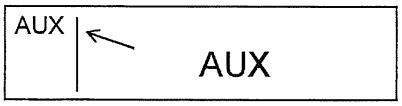

There are two AUX Modes available:

AUX (iPod) and NAV MP3

Press and hold the MODE button until the system enters the audio system mode menus. Then press and release the MODE button repeatedly to toggle to the AUX mode menu.

Press TUNE (+) or TUNE (-) to set the mode to AUX (for iPod or any other MP3 player use) or to NAV MP3 to use the MP3 player in the NAV unit.

AUDIO SYSTEM - CROSS COUNTRY 8–BALL

AUDIO SYSTEM INTRODUCTION (8-BALL)

The Cross Country 8-Ball audio system differs from the system described for the Cross Country, Cross Country Tour and Magnum models.

NOTE
The Cross Country 8-Ball audio system cannot be updated.

The 8-Ball audio system uses the following two sources for playing back audio:

- An iPod (when connected, the iPod will charge and can be controlled using the handlebar audio controls.
- GARMIN GPS (when using the available audio integration kit).

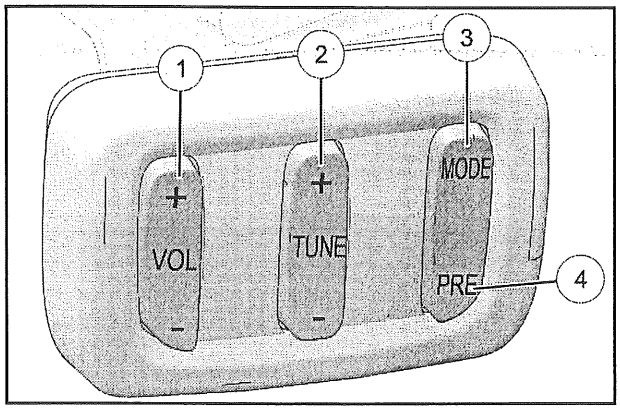

USING THE GLOBAL POSITIONING SYSTEM (GPS) INTERFACE

IMPORTANT OPERATING NOTES:

- Make sure the audio on the GPS is set to 80% or higher and is not muted.
- Entertainment audio will automatically mute (pause) when GPS audio commands are received from the GARMIN device. Entertainment audio will automatically resume at the completion of the command.
- Before using the GARMIN as the entertainment source (SiriusXM/MP3), the iPod must be paused, turned off or disconnected from the system.

AUDIO CONTROLS (8-BALL)

MODE Button ①: The MODE button has no function for this system.

Tuner Button ②: Press and release TUNE (+) or TUNE (-) to change iPod tracks.

Volume Button ③: Press VOL (+) to increase audio volume. Press VOL (-) to decrease audio volume. Press and hold a button to rapidly increase or decrease volume. Press and hold VOL (-) for two seconds to pause the audio. To resume audio, press VOL (+).

NOTE
An alarm tone sounds when maximum volume is reached.

Memory Preset (PRE) Button ④: Press PRE to cycle through the stored iPod playlists.

AUDIO SYSTEM - MAGNUM / MAGNUM X-1

AUDIO SYSTEM INTRODUCTION

Not all motorcycles are equipped with an audio system. Motorcycles equipped with an audio system may not be equipped with all components discussed in the audio section of this manual. Components not installed at the factory can be purchased from and installed by your VICTORY

⚠ WARNING

Distracted driving can result in loss of control, collision or accident, which may result in serious injury or death. Avoid using any features and devices while driving that may take your attention away from the road and safe driving habits, even for a moment. Always keep both hands on the handlebars. When device operation is necessary, please use voice activated.

Made for iPod iPhone

Bluetooth®

WORKS WITH PANDORA®

IPOD / IPHONE DEVICE COMPATIBILITY

Your radio will connect with the following iPod and iPhone models. Update your iPod and iPhone devices to the latest software before use.

Made for:

- iPhone 5s
- iPhone 5c
- iPhone 5
- iPhone 4s
- iPhone 4
- iPod touch (5th generation)
- iPod touch (4th generation)
- iPod touch (3rd generation)
- iPod nano (7th generation)
- iPod nano (6th generation)
- iPod nano (5th generation)

"Made for iPod" and "Made for iPhone" mean that an electronic accessory has been designed to connect specifically to iPod or iPhone, respectively, and has been certified by the developer to meet Apple performance standards. Apple is not responsible for the operation of this device or its compliance with safety and regulatory standards. Please note that the use of this accessory with iPod or iPhone may affect wireless performance.

RADIO FREQUENCIES

North America

- AM 520 to 1720 kHz
- FM 87.9 to 107.9 MHz
- WX 7 NOAA Channels(162.400 to 162.550 MHz)

Europe

- FM 87.5 to 108.00 MHz (100 kHz steps)
- MW 531 to 1602 kHz
- LW 153 to 279 kHz

Europe 50

- FM 87.5 to 108.00 MHz (50 kHz steps)
- MW 531 to 1602 kHz
- LW 153 to 279 kHz

Australia

- FM 87.5 to 108.0 MHz
- AM 531 to 1701 kHz

Japan

- FM 76.1 to 89.9 MHz
- AM 522 to 1629 kHz

Taiwan

- FM 87.5 to 108.0 MHz
- AM 531 to 1701 kHz

RADIO SOURCES

North America Sources

- FM
- AM
- WX
- USB
- NAV
- Bluetooth

Europe/Europe 50 Sources

- FM
- MW
- LW
- USB
- NAV
- Bluetooth

Japan/Taiwan Sources

- FM
- AM
- USB
- NAV
- Bluetooth

Australia Sources

- FM
- AM
- USB
- NAV
- Bluetooth

AUDIO MENU OPTIONS

- Bass
- Mid
- Treble
- Fader
- Automatic Volume Control (AVC)
- Audio Output (Speakers / Headsets)
- Bluetooth Setup
- Driver Device
- NAV Audio
- iPod Music Shuffle
- AM/FM Clear Preset
- Radio Broadcast Data System (RBDS)

AUDIO CONTROLS

The audio controls are located on the left handlebar.

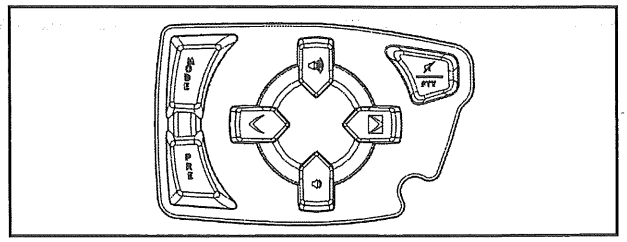

1	Radio On/Off Volume +/- Menu Scroll		VOL (+) VOL (-)
2	Tuner Music Track Select Menu Navigation		TUNE (+) TUNE (-)
3	Preset Button (Select/Enter Menus)	PRE	PRESET
4	Mute Push-to-Talk (PPT) Voice Recognition	PTT	MUTE PTT
5	Mode Button	MODE	MODE

NOTE

Some mode menu options have sub-menus. Sources and menu options will be displayed only for installed components.

AUDIO DISPLAY

FM	ST 97.1

USB CONNECTOR

A USB connector cord is located in the right saddlebag. A pouch is provided to hold your device while operating the vehicle. The pouch is padded and tethered to the fairing to securely hold your device.

NOTE

Device-to USB adapters are not supplied with the motorcycle and must be purchased separately. Reference device owner's manual for USB accessory adapter information.

AUDIO DISPLAY ZONES

The LCD display uses four distinct zones to provide the rider with audio system information.

1	3 / 4
2	4

1. Entertainment Icons: Displays the entertainment source.

P	∗1 P	iPod

NOTE

iPod will be displayed whenever an iPod or iPhone is connected via USB. The number "1" designates "Driver Source".

2. Bluetooth Device Status Meters / NAV: Battery and signal strength meters are shown for paired devices. NAV is displayed when navigation system transmits voice commands.

	NAV	NAV

3. Menu Titles: When this zone is displayed a line will separate it from zone four. Zone three describes the menu you are viewing below the line. Anytime zone three is not underlined, it will display now playing information or an error / prompt.
4. Track or Station Information / Menu Choices: When a menu is displayed, this zone contains menu choice. At all other times, radio station, artist, album, song, call, or error information populates zones three and four.

AUDIO SYSTEM POWER

VICTORY

Turn the power switch ON to use the audio system.

NOTE

To prevent battery drain when the engine is not running, power will automatically turn off after 5 minutes.

To turn the audio system on, press and release MODE or one of the volume buttons.

The screen will display the last active entertainment source. The volume level when power is turned on will default to the level in use when power was last turned off (limited to level 15).

AUDIO SYSTEM VOLUME

Audio is active in either the speakers or the headsets. The volume controls will adjust the volume in the speakers or in the driver's Bluetooth headset.

NOTE

On some headsets, the user must press (+) or (-) or rotate the volume dial on the headset controls to raise or lower volume.

To adjust the volume, press:

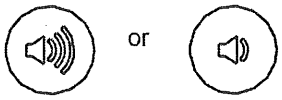

Turn the Radio Off

To turn the radio off, press and hold:

VICTORY

MUTE/PUSH-TO-TALK (PTT)

To mute the audio system volume, press:

To un-mute the audio system volume, press:

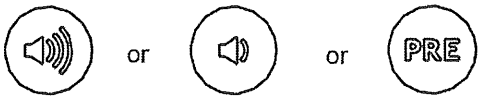

To activate the voice recognition feature on a paired phone, double press:

LOW VOLTAGE MUTE

If the battery voltage drops to 10.5+/-0.5 volts, the radio will mute to reduce voltage drain on the battery. Full volume will be restored when the battery voltage returns to 11.5– 12.5 volts. If battery voltage drops below 8.5 volts, the radio will turn off. Radio function will not be available until the battery is fully charged.

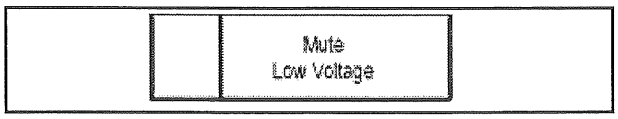

SELECTING AUDIO SOURCES

To choose the desired audio source, press repeatedly:

Each press changes the audio source as follows:

- FM
- AM
- MW (Europe only)
- LW (Europe only)
- WX (Weather) (North America only)
- USB
- NAV (If enabled)
- Bluetooth Driver (if enabled)

FM source:

All models (shown with RBDS FULL).

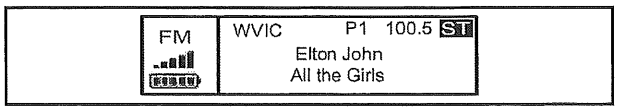

AM source:

All models excluding Europe.

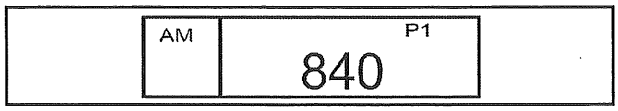

MW (Medium Wave) source:

Europe models only.

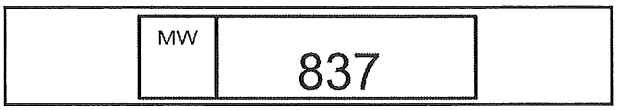

LW (Long Wave) source:

Europe models only.

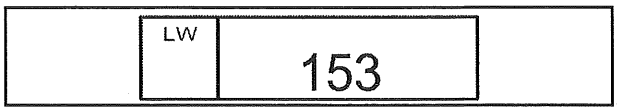

WX (Weather) source:

North America models only USB sources.

WX	3

Flash memory connected.

USB	Album Name Artist Name Track Title

iPhone / iPod connected.

iPod	Album Name Artist Name Track Title

Pandora® on iPhone / iPod (Pandora is currently available only in the United States, Australia and New Zealand).

P	Station Name Artist Name Track Title

NAV Audio source:

All models (skipped if not enabled).

NAV	NAV AUDIO

Bluetooth Driver source:

⁑ 1	Alex's Phone Artist Name Song Title

All models (skipped if not enabled).

NOTE

Pandora is available on some Bluetooth devices.

⁑1 P	Station Name Artist Name Track Title

FM / AM / MW / LW Tuning

NOTE

MW and LW radio sources are in Europe only.

1. Press MODE repeatedly to choose the desired audio source:

2. Use the tune buttons on the left control to tune radio stations to locate stations in single-step increments. Press and release:

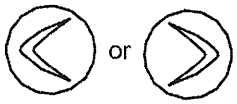

3. Press and hold TUNE (-) or TUNE (+) to seek for radio stations. The radio will slew until the tune button is released. At that time, the radio will seek to the next strong radio signal.

FM	WVIC P1 100.5 ST Elton John All the Girls

FM station shown with RBDS FULL on.

FM / AM / MW / LW Tuning

Memory Presets

The audio system features 15 user-defined presets for each tuner source for storing favorite stations.

1. To set a preset, press MODE repeatedly until the desired source is active (FM, AM, MW, LW).
2. Use TUNE (-) or TUNE (+) to tune the radio station.
3. Press and hold:

4. Press VOL (+) or VOL (-) to cycle to an available preset location. The preset location displays on the screen.

NOTE

Saving a radio station without picking a location will save the station in the next available location.

5. Press PRE when the desired location is displayed.

+ VOL -	Saving 100.5 P1 ---.- P2 ---.-

6. The station will be stored.

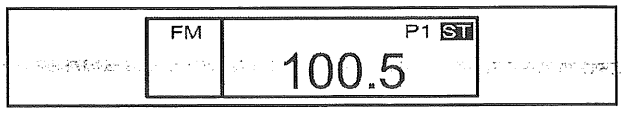

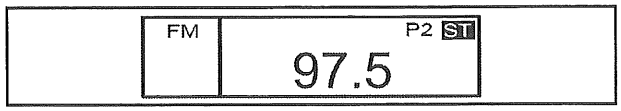

TIP

If the desired preset location already contains a stored radio station, it will be overwritten by the new selection.

7. Press PRE repeatedly to scroll through the list of radio presets.

Weather Band (WX) Weather band channels are broadcast by the National Oceanic and Atmospheric Administration (NOAA). NOAA operates more than 940 transmitters covering the United States, Puerto Rico, the U. S. Virgin Islands, the U. S. Pacific Territories and adjacent coastal waterways.

1. Press MODE repeatedly until WX source is selected.

TIP

Typically, only one weather band channel will be available for a given location. When traveling, if a channel becomes unavailable, search for another active channel.

2. Press VOL (-) or VOL (+) to select a channel.

USB Audio Source - Flash / Memory

Connect the USB memory stick to the USB connector cable. The following music files are recognized by the radio:

- WAV
- OGG
- MP3
- FLAC

Drive must be FAT32 formatted. Music files not recognized by the radio will be ignored. If a drive is not recognized, the display screen will display: "No Device".

1. Press and release MODE until USB is active. When USB is active, the console screen will display "USB" as the active source.

2. Press and hold TUNE (-) or TUNE (+) to select the next or the previous music folder. The folders are arranged in alphabetical

3. Press and release TUNE (-) or TUNE (+) to select the next or previous song.

USB Audio Source - iPod / iPhone Connected

1. Connect a compatible iPod or iPhone device to the USB connector cable.
2. Press and release MODE until iPod is the active source.

3. When iPod is active, the console screen will display "iPod" as the active source.

Tuning / FF - RW

1. Press and release TUNE (-) or TUNE (+) to select the next or previous song.
2. Press and hold TUNE (-) or TUNE (+) to fast forward or rewind.

Direct Song Selection

1. Press and release PRE to display currently playing track list.
2. Press and release VOL (+) or VOL (-) to scroll track list.
3. Press and release PRE or TUNE (+) to select the new song.
4. Press TUNE (-) to exit without selecting a new song track.

USB Audio Source - iPod / iPhone Connected

1. Press and hold PRE until the category list appears.

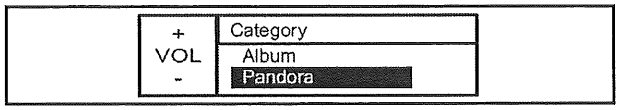

NOTE

Pandora will appear only if device is connected via USB and is capable of running Pandora.

2. To navigate the categories, press and release VOL (+) or VOL (-). Press and hold to continuously scroll through the list.
3. Press and release PRE or to select new category.
4. Press and release MODE to exit to the main
5. Press PRE or TUNE (+) to navigate from the category menu to the sub-category.

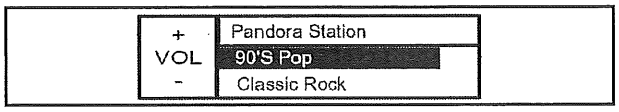

6. Press and release VOL (+) or VOL (-) to scroll.
7. Press and release PRE to select new subcategory and play the first song found. Press TUNE (+) to browse the list of songs available.
8. Press TUNE (-) to navigate back to the subcategory or category selection.

USB Audio Source - iPod / iPhone with Pandora

When using the Pandora app on an iPod or iPhone, connect the device to the USB connector. Using the USB connection will enable Pandora functions like: skip track, thumbs up, and thumbs down, through the left-hand control.

NOTE

Pandora is intended for use only in the United States, Australia and New Zealand. If licensing restrictions prevent Pandora from playing, "NOT AVAILABLE" displays.

P	Pandora Not Available

1. Turn on the Pandora app. Connect a compatible iPhone or iPod device to the USB connector.

P	Station Name Artist Name Track Title

2. Press and release MODE until Pandora is displayed in the screen.

NOTE

If Pandora is the currently playing app on the device, the USB source displays information and enables features specific to the app. If it is not, you must select Pandora from the category menu.

Press and hold PRE.

3. To give a "THUMBS UP" for the current song, press and hold TUNE (+).

P	Thumbs Up Artist Name Track Title

4. To give a "THUMBS DOWN" for the current song, Press and hold .

P	Thumbs Down Artist Name Track Title

5. To skip forward to the next song, press and release TUNE (+).

P	Skipping Track

6. When the skip limit is reached, "SKIP LIMIT REACHED" displays.

P	Skip Limit Reached

7. When the default screen displays, press and release PRE to display the station list screen.

+ VOL -	Category Album Pandora

+ VOL -	Pandora Station 90'S Pop Classic Rock

8. Press and release PRE to display the

   station list. Use VOL (+) or VOL (-) to scroll through the list.

   Press PRE or TUNE (+) to select a new station.

NAV Audio Source

NAV	NAV AUDIO

Please read this manual and the GARMIN ZUMO 660 NAV MP3 information provided with your player to become familiar with all unit features and operation.

The audio integration kit must be installed to enable outputs from the NAV MP3 (such as navigation instructions or user-loaded MP3 media files) to play through the headsets or speakers. The unit is fully functional without the kit installed, but there will be no interface with the vehicle's audio

Navigation MP3 Operation Tips

- Signals coming from the NAV MP3 unit will override any source of the motorcycle's audio system to ensure navigation instructions are communicated when needed. The signals will also override the MP3 player.

- You must set volume levels within the NAV MP3 unit. Volume settings in the motorcycle's audio system control NAV MP3 volume, but navigation instructions may be difficult to hear if volume levels in the unit are set too low. See the GARMIN information for setting procedures. The recommended initial settings are 100/80/80: MASTER 100%, NAVIGATION 80%, MEDIA 80%.
- Pause or stop the MP3 player to play audio from radio source.
- If playing MP3 files from the GARMIN ZUMO 660 unit, you may need to turn down the "media volume" on the GARMIN unit to avoid distortion.
- NAV audio must be turned on in the mode menu in order to play MP3 music files from the GARMIN ZUMO 660 NAV unit.
- While in NAV source, only MP3 music stored on the GARMIN ZUMO 660 will play on the

The power switch must be ON to use the audio system.

1. Press and release until NAV is the active source.
2. When navigation instructions are given, the music volume will be muted and "NAV" will be displayed in display zone two.

USB NAV	Album Name Artist Name Track Title

Bluetooth Sources

NOTE

To utilize the Driver Device source, a device must be paired with the radio and the driver source must be turned on. See Bluetooth setup and Bluetooth Driver Source.

Press and release MODE until "DRIVER DEVICE" is displayed on the screen.

NOTE

If a Bluetooth compatible device is paired to the DRIVER DEVICE. the radio will automatically turn on the DRIVER DEVICE in the audio source loop. Make sure the Bluetooth volume on your device is turned all the way up.

Bluetooth Source - Driver

When a device is paired and connected to the Driver Device location, selecting this mode will stream music to the radio.

⁑ 1	Alex's Phone Artist Name Song Title

When a device is paired but not connected, "SEARCHING" will display.

⁑ 1	Alex's Phone Searching

If a device cannot be detected for 15 seconds, the radio will continue to search for the device, but the screen will display "NOT CONNECTED".

⁑ 1	Driver Device Not Connected

Bluetooth Source - Driver

When a device is paired to a Bluetooth source and is in the process of connecting to the radio, "CONNECTING" will display.

⁑ 1	Alex's Phone Connecting

When Driver Device is turned on, "NO AUDIO" will display as the radio resumes connection with the device.

⁑ 1	Alex's Phone No Audio

NOTE

Press and release PRE to initiate a play command to the device if "NO AUDIO" continues to display. Doing so may force the device to start playing.

If the connected device does not support track information, only the Bluetooth device name displays.

⁑ 1	Alex's Phone

Bluetooth Device Music Mode Settings

The DRIVER DEVICE source will play the music source that is active on the connected device. Some Bluetooth devices allow the radio to access additional features and controls when using the Pandora app.

The MUSIC MODE menu offers two settings:

- **Default** - Radio streams active music source from device with limited left-hand control mfunctions (even if Pandora is the active music msource on the device).

- **Pandora** - Radio always commands device to use Pandora when DRIVER DEVICE is on. Left-hand control features expanded Pandora functionality: skip track, thumbs up, and thumbs down.

Music Mode Setting - Bluetooth Setup

1. Press and hold MODE until the system enters the audio system mode menus.
2. Press and release MODE to cycle through the menu items until BLUETOOTH SETUP is displayed. Press and release PRE to access the Bluetooth Setup Menu options.
3. In the Bluetooth Setup Menu, press VOL (+) or VOL (-) to navigate through selections. Select DRIVER DEVICE.

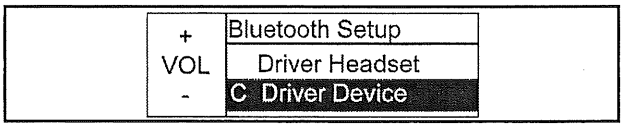

4. Press VOL (+) or VOL (-) to navigate through selections until the device you want to configure is highlighted. Press and release PRE to select the device.
5. Press VOL (+) or VOL(-) to navigate to MUSIC. Press and release PRE.

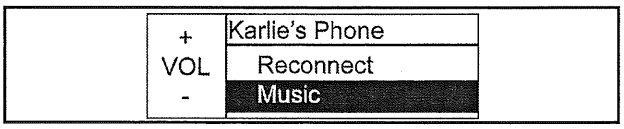

6. Press VOL (+) or VOL (-) to navigate to either DEFAULT or Pandora.

   Press and release PRE to make the selection.

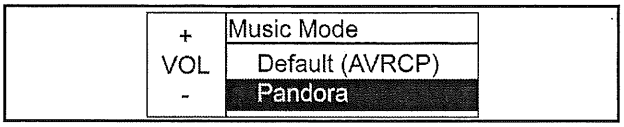

7. If Pandora is selected, the screen will display station name, artist name and song title.

Music Mode Setting - Bluetooth Driver Source

1. When the Bluetooth device audio source is active and playing, press and hold PRE until the system enters the MUSIC MODE menu.

   Bluetooth Driver Device screen *shown in Default mode*

2. Press VOL (+) or VOL (-) to navigate to either DEFAULT or Pandora®. Press and release PRE to make the selection.

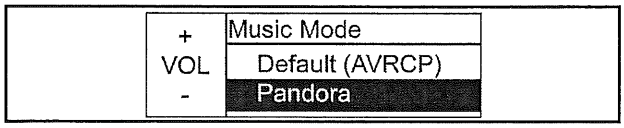

3. If Pandora is selected, the "Now Playing" screen will display station name, artist name and song title.

4. To give a "THUMBS UP" for the current song, press and hold TUNE (+).

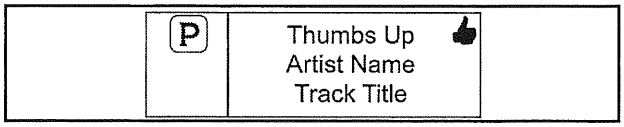

5. To give a "THUMBS DOWN" for the current song, Press and hold TUNE (-).

6. To skip forward to the next song, press and release TUNE (+).

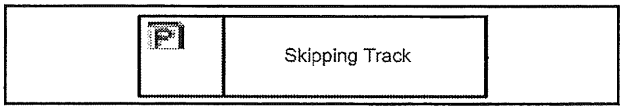

7. When the skip limit is reached, "SKIP LIMIT REACHED" displays.

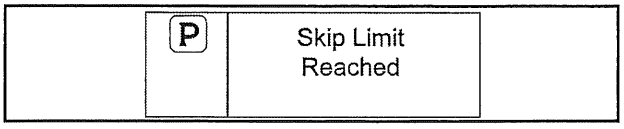

8. When the "Now Playing" screen displays, press and release PRE to display the station list screen.

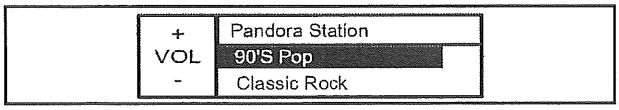

VOICE RECOGNITION MODE

The radio features voice recognition when a driver headset is connected and turned on. Radio Bluetooth functionality is dependent on the capabilities of the device. Please see your device's user manual.

NOTE

Make sure the Bluetooth volume on your device is turned all the way up. The device's signal and battery strength are shown on the display with a range of zero to five (0-5) with "5" representing maximum strength.

SIRI EYES FREE

The radio's voice command mode supports the Siri Eyes Free feature on select iPhone models so you can use Siri without having to look at the screen.

AUDIO MODE MENUS

1. Press and hold MODE until the system enters the audio system mode menus.
2. Press and release MODE to cycle through the following menu items, shown in order of display:
   - Bass
   - Mid
   - Treble
   - Fader
   - Automatic Volume Control (AVC)
   - Audio Output Select (Speakers / Headsets)
   - Bluetooth Setup
   - Bluetooth Driver Device Source ON/OFF
   - NAV Audio
   - iPod Music Shuffle
   - FM/AM Tuner Clear Presets
   - Radio Broadcast Data System (RBDS)
3. Press and release MODE to return to mode menu list.

Exiting Mode Menu

Exit the menu and return to the default display using either option:

- Wait 10 seconds (the system will automatically exit).
- Press TUNE (-) or TUNE (+).

Bass Setting

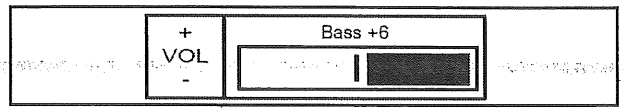

1. Press VOL (+) or VOL (-) to adjust.
2. Press and release MODE to move to the next selection.

Mid Setting

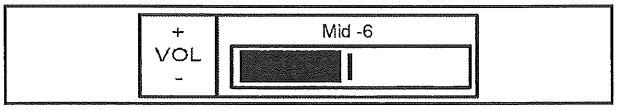

1. Press VOL (+) or VOL (-) to adjust.
2. Press and release MODE to move to the next selection.

Treble Setting

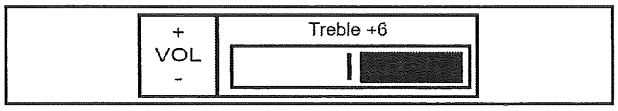

1. Press VOL (+) or VOL (-) to adjust.
2. Press and release MODE to move to the next selection.

Fader Setting

Use the fader adjustment menu to control audio sound balance between front and rear speakers.

NOTE

The fader setting menu does not display if the headsets are selected for output.

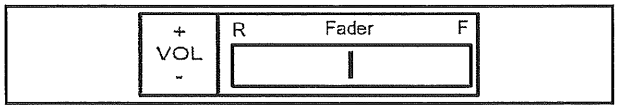

1. Press VOL (+) or VOL (-) to adjust.
2. Press and release MODE to move to the next selection.

Automatic Volume Control (AVC)

When set, this feature will lower or raise the speaker/ headset volume automatically, based on vehicle speed.

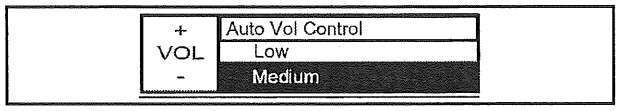

- Off: No Adjustment
- Low: Least aggressive setting
- Medium: Moderate setting

- High: Most aggressive setting

1. Press VOL (+) or VOL (-) to adjust.
2. Press and release MODE to move to the next selection.

Audio Output Select

Use the audio output select menu to direct the audio output to either the external speakers or headsets.

+ VOL -	Audio Output Speakers Headsets

1. Press VOL (+) or VOL (-) to adjust.
2. Press and release MODE to move to the next selection.

Bluetooth Setup

Bluetooth Setup allows the user to pair and unpair headsets and devices.

1. Press and hold MODE to access the audio menu.
2. Press and release MODE until "BLUETOOTH SETUP" is displayed.

	Bluetooth Setup Press Preset

3. Press and release PRE to access the Bluetooth Setup Menu options.

NOTE

The Bluetooth setup menu is not available when the motorcycle is moving.

	Bluetooth Setup Menu Not Available

Bluetooth Setup Menu

The Bluetooth Setup Menu provides the following selections:

- DRIVER HEADSET Pair/unpair driver headset(s)
- DRIVER DEVICE: Pair/unpair driver device(s)
- EXIT: Exit Bluetooth Setup Menu

+ VOL -	Bluetooth Setup Driver Headset Driver Device

1. Press and release VOL (+) or VOL (-) to scroll through the list.
2. Press and release PRE or TUNE (+) to select an item.

Bluetooth Setup Notes

+ VOL -	Bluetooth Setup Driver Headset Driver Device

- The Bluetooth Setup Menu will display "C" next to each position when there is either a headset or device connected.
- Each Bluetooth position can have a maximum of three devices paired to that location. To add another device, you must remove one or all of the paired devices.
- Only one device can be connected at any given time.
- During audio system power-up, the radio will search through the list of paired devices and make connections to one of each pairing position.

NOTE

Turning the source off in the MODE MENU will not prevent the device from connecting; it only prevents it from appearing on the audio source loop. This allows a device to be paired and connected only for the purpose of receiving phone calls.

- Left-hand audio controls are limited to basic functions when devices are connected via Bluetooth.
- To maintain full left-hand audio controls, connect the device to the USB cable.
- To enable maximum functionality when streaming Pandora over a device, select Pandora from the MUSIC MODE menu. See Bluetooth Device Music Mode Settings.
- To enable maximum functionality when playing Pandora on an iPod or iPhone, connect the device using the USB cable.

Driver Headset Pairing

NOTE

Incoming phone calls cannot be answered if driver headset is not connected. Press and release PRE or MODE to send the calls to voice mail.

1. Press and hold MODE to access the audio menu.
2. Press and release MODE until "BLUETOOTH SETUP" displays.
3. Press and release MODE to access the Bluetooth Setup Menu options.
4. In the Bluetooth Setup Menu, press VOL (+) or VOL (-) to navigate through selections. Select Driver Headset.

+ VOL -	Bluetooth Setup Driver Headset Driver Device

5. Press and release PRE.
6. Press PRE to select Add Headset.

+ VOL -	Driver Headset
	Add Headset
	Exit

7. The radio will search for the headset.

+ VOL -	Add Headset
	Searching

NOTE

Sena SMH10 motorcycle Bluetooth headsets are recommended. Reference the headset user manual to enable Bluetooth pairing.

8. When the headset is found, its name displays.

+ VOL -	Add Headset
	Sena SMH10
	Exit

9. Press and release PRE to pair the headset with the radio.
10. The radio displays "PAIRING" during the pairing process.

+ VOL -	Sena SMH10
	Pairing

NOTE

If prompted to enter a pairing code, find the code in the headset user's manual. Use VOL (+) or VOL (-) to enter the digits 0-9.

+ VOL -	Pairing Code
	----

11. Press and release PRE to enter the number and move to the next digit. Default codes are typically "0000" or "1234".
12. "PAIRED" displays on the screen when the radio has successfully paired the headset.

+ VOL -	Sena SMH10
	Paired

Error Messages

1. If no headset is found, "NO DEVICE FOUND" displays. Press and release PRE to return to the Bluetooth Setup Menu. Verify the headset is set to "discoverable".

+ VOL -	Add Headset
	No Device Found

2. If device pairing fails, "PAIRING FAILED" displays. Press and release PRE to return to the Bluetooth Setup Menu. Verify the headset is set to "discoverable". Verify the correct pairing code is entered.

+ VOL -	Sena SMH10
	Pairing Failed

3. If other errors occur, "ERROR" displays. Press and release PRE to return to the Bluetooth Setup Menu. Re-attempt the pairing procedure.

+ VOL -	Bluetooth Setup
	Error

Driver Device Pairing

The radio can be paired with Bluetooth devices such as smart phones.

1. In the Bluetooth Setup Menu, press VOL (+) or VOL (-) to scroll.
2. Set the device to "Discoverable Mode" before starting the pairing procedure.
3. Scroll to Driver Device. Press and release PRE.

+ VOL -	Bluetooth Setup
	Driver Headset
	Driver Device

4. Scroll to ADD DEVICE. Press and release PRE.

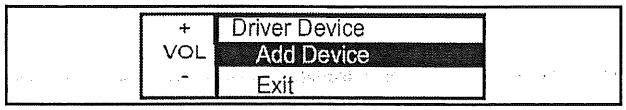

The radio will search for the device.

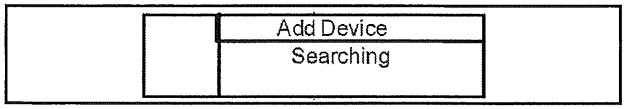

When found, the device name displays.

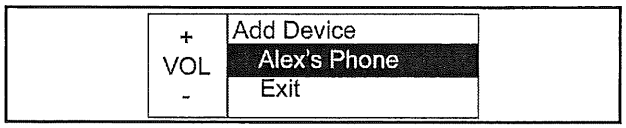

5. Press and release to pair the device with the radio.

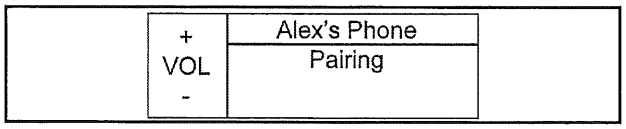

6. When the confirmation screen displays, verify that the code on the device matches the code displayed on the screen.

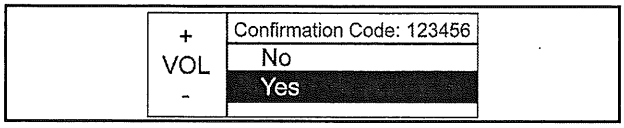

Press VOL (+) or VOL (-) to scroll to YES. Press and release PRE to accept.

NOTE

Select "NO" if the codes do not match. Perform all steps again to pair the device.

7. "PAIRED" displays when the radio has successfully paired the device.

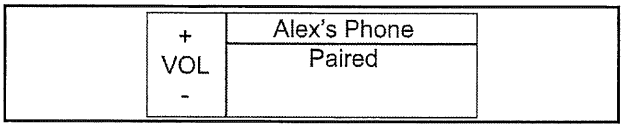

Unpairing / Reconnecting Devices

The following steps reference the Driver Headset as an example. Use the same procedure to unpair other devices.

1. In the Bluetooth Setup Menu, press VOL (+) or VOL (-) to scroll. Scroll to Driver Headset. Press and release PRE.

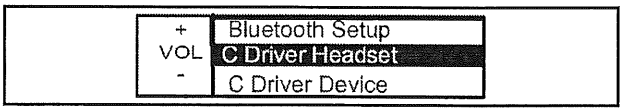

2. To unpair ALL of the devices in the Driver Headset location, scroll to UNPAIR ALL. Press and release PRE.

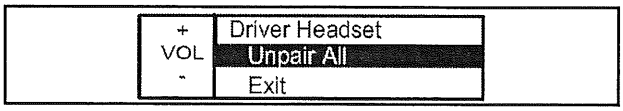

Scroll to YES.

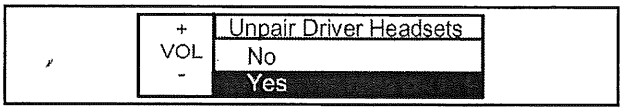

Press and release PRE. The radio will unpair all of the devices from this location and return to the Bluetooth Setup Menu.

3. To unpair individual devices in the Driver Headset location, scroll to the device you want to unpair.

+ VOL -	Driver Headset
	C Scala Rider G9
	Sena SMH10

Press and release PRE.
Scroll to UNPAIR.

+ VOL -	Scala Rider G9
	Unpair
	Exit

Press and release PRE to unpair the device.

	Scala Rider G9
	Unpairing

"UNPAIRED" displays after the device is removed from the list.

+ VOL -	Scala Rider G9
	Unpaired

The radio will return to the Driver Headset device location.

+ VOL -	Driver Headset
	Sena SMH10
	Add Headset

4. To connect a different paired device at a location, scroll to the device.

Press and release PRE.

Scroll to RECONNECT.

+ VOL -	Sena SMH10
	Reconnect
	Unpair

Press and release PRE.

Bluetooth Driver Device

1. Press VOL (+) or VOL (-) to turn the Driver Bluetooth Device source ON or OFF.

+ VOL -	Driver Device
	Source Off
	Source On

2. Press and release MODE to move to the next selection.

NAV Audio

1. Press VOL (+) or VOL (-) to turn the NAV Audio source ON or OFF.
2. Press and release MODE to move to the next selection.

iPod Music Menu

The iPod music menu allows the user to set how the device plays music tracks using the TUNE (+) or TUNE (-) buttons. Four options are provided:

- Default - No changes from device's current settings.
- Shuffle Off - Forces shuffle feature off and plays in playlist/album order or alphabetical order. Playlists are in an order prearranged by the user or device.
- Shuffle Tracks - All tracks are randomized.
- Shuffle Albums - Randomizes albums, but plays each track in album's order.

1. Press VOL (+) or VOL (-) to scroll and select one of the available iPod Music modes.

+ VOL -	iPod Music
	Default
	Shuffle Off

- DEFAULT
- SHUFFLE OFF
- SHUFFLE TRACKS
- SHUFFLE ALBUMS

2. Press and release MODE to move to the next selection.

Tuner Clear Presets

1. To clear all FM or AM radio station presets, press VOL (+) or VOL (-) to select FM or AM clear presets.

+ VOL -	Clear Presets
	FM Press Preset
	AM

2. Press and release PRE to clear the presets for the desired tuner band.

+ VOL -	Clear Presets
	FM Cleared
	AM

3. Press and release MODE to move to the next selection.

Radio Broadcast Data System

1. Press VOL (+) or VOL (-) to select a Radio Broadcast Data System (RBDS) setting.

NOTE

When on, the screen displays artist, song title, etc. if available in the radio signal.

- OFF
- ON (Station name only)
- FULL (Station name + radio text)

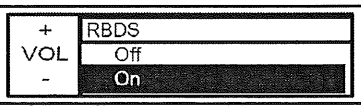

2. Press and release MODE to move to the top of the MODE menu list.

AUDIO SYSTEM DIAGNOSTICS

The audio system diagnostic menu allows the following actions for you or your VICTORY dealer:

- View radio software version
- Perform left-hand audio control key pad tests
- Set radio tuner location
- View vehicle speed

Diagnostic Menu Access

1. Press and hold VOL (-) to turn the radio off.
2. Turn the power switch OFF.
3. Turn the power switch ON.
4. Press and hold PREE for several seconds.
5. The Radio Version screen will appear if steps 1-4 were performed correctly.

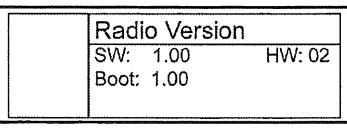

TIP

If you do not see this screen, perform steps 1-4 again.

6. Press and release MODE to move to Key Pad Diagnostics.

Key Pad Diagnostics

Key pad diagnostics allows the user to the test the function of each button on the left hand audio control block.

1. Press and release each of the audio control buttons to test the function of each button.
2. Observe the display after each button is pressed. The screen will display the button name by its function. If nothing displays, the button is not working. See your authorized dealer for service.

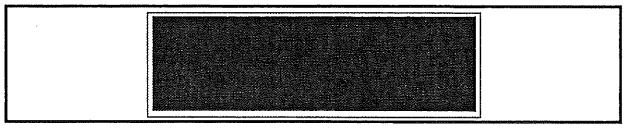

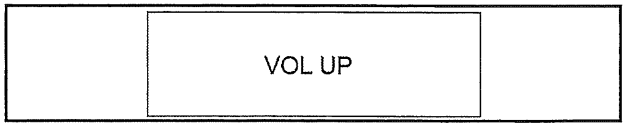

3. Press and release MODE to view UI version.
4. Press and release MODE to move to Tuner Location Settings.

Tuner Location Settings

The radio tuner can be set to the geographical location where the motorcycle will be driven.

The following settings can be chosen under the Tuner Location Settings menu:

- NORTH AMERICA (USA/CANADA/MEXICO)
- EUROPE
- EUROPE 50
- JAPAN
- AUSTRALIA
- TAIWAN

1. Press and release or to make a new selection.
2. Turn the power switch OFF, then ON to save the new tuner location.

Speed Diagnostic

The Speed Diagnostic menu displays vehicle speed. Use this menu to verify the radio system is receiving a speed signal from the vehicle control module.

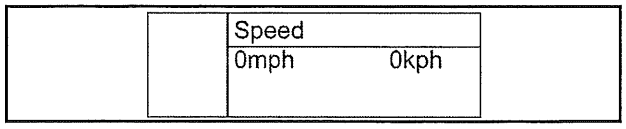

1. Press and release MODE to return to the radio hardware/version display screen.
2. To exit the audio system diagnostics menu, press and release TUNE (-) or TUNE (+) to return to the RADIO OFF screen.

AUDIO COMPLIANCE INFORMATION

FCC and Industry Canada Compliance Statement

This equipment complies with FCC radiation exposure limits set forth for an uncontrolled environment. This equipment should be installed and operated with

minimum distance of 20 cm between the radiator and your body.

This device complies with Industry Canada license-exempt RSS standard (s). Operation is subject to the following two conditions: (1) this device may not cause interference, and (2) this device must accept any interference, including interference that may cause undesired operation of the device.

Japan Compliance Statement

This device contains a radio module with certification number:

R 209-J00052

REFERENCE

SAE TAP / DRILL SIZES

THREAD SIZE	DRILL SIZE	THREAD SIZE	DRILL SIZE
#0–80	3/64	1/2–13	27/64
#1–64	53	1/2–20	29/64
#1–72	53	9/16–12	31/64
#2–56	51	9/16–18	33/64
#2–64	50	5/8–11	17/32
#3–48	5/64	5/8–18	37/64
#3–56	45	3/4–10	21/32
#4–40	43	3/4–16	11/16
#4–48	42	7/8–9	49/64
#5–40	38	7/8–14	13/16
#5–44	37	1–8	7/8
#6–32	36	1–12	59/64
#6–40	33	1 1/8–7	63/64
#8–32	29	1 1/8–12	1 3/64
#8–36	29	1 1/4–7	1 7/64
#10–24	24	1 1/4–12	1 11/64
#10–32	21	1 1/2–6	1 11/32
#12–24	17	1 1/2–12	1 27/64
#12–28	4.6 mm	1 3/4–5	1 9/16
1/4–20	7	1 3/4–12	1 43/64
1/4–28	3	2–4 1/2	1 25/32
5/16–18	F	2–12	1 59/64
5/16–24	I	2 1/4–4 1/2	2 1/32
3/8–16	O	2 1/2–4	2 1/4
3/8–24	Q	2 3/4–4	2 1/2
7/16–14	U	3–4	2 3/4
7/16–20	25/64		

METRIC TAP / DRILL SIZES

TAP SIZE	DRILL SIZE	DECIMAL EQUIVA-LENT	NEAREST FRACTION
3 x .50	#39	0.0995	3/32
3 x .60	3/32	0.0937	3/32
4 x .70	#30	0.1285	1/8
4 x .75	1/8	0.125	1/8
5 x .80	#19	0.166	11/64
5 x .90	#20	0.161	5/32
6 x 1.00	#9	0.196	13/64
7 x 1.00	16/64	0.234	15/64
8 x 1.00	J	0.277	9/32
8 x 1.25	17/64	0.265	17/64
9 x 1.00	5/16	0.3125	5/16
9 x 1.25	5/16	0.3125	5/16
10 x 1.25	11/32	0.3437	11/32
10 x 1.50	R	0.339	11/32
11 x 1.50	3/8	0.375	3/8
12 x 1.50	13/32	0.406	13/32
12 x 1.75	13/32	0.406	13/32

DECIMAL EQUIVALENTS

FRACTION	DECIMAL	MM TO INCHES
1/64	0.0156"	
1/32	0.0312"	1 mm = 0.0394"
3/64	0.0469"	
1/16	0.0625"	
5/64	0.0781"	2 mm = 0.0787"
3/32	0.0938"	
7/64	0.1094"	3 mm = 0.1181"
1/8	0.1250"	
9/64	0.1406"	
5/32	0.1563"	4 mm = 0.1575"
11/64	0.1719"	
3/16	0.1875"	5 mm = 0.1969"
13/64	0.2031"	
7/32	0.2188"	
15/64	0.2344"	6 mm = 0.2362"
1/4	0.25"	
17/64	0.2656"	7 mm = 0.2756"
9/32	0.2813"	
19/64	0.2969"	
5/16	0.3125"	8 mm = 0.3150"
21/64	0.3281"	
11/32	0.3438"	9 mm = 0.3543"
23/64	0.3594"	
3/8	0.375"	
25/64	0.3906"	10 mm = 0.3937"
13/32	0.4063"	
27/64	0.4219"	11 mm = 0.4331"
7/16	0.4375"	
29/64	0.4531"	
15/32	0.4688"	12 mm = 0.4724"
31/64	0.4844"	
1/2	0.500"	13 mm = 0.5118"
33/64	0.5156"	
17/32	0.5313"	
35/64	0.5469"	14 mm = 0.5512"
9/16	0.5625"	
37/64	0.5781"	15 mm = 0.5906"
19/32	0.5938"	
39/64	0.6094"	
5/8	0.625"	16 mm = 0.6299"
41/64	0.6406"	
21/32	0.6563"	17 mm = 0.6693"
43/64	0.6719"	
11/16	0.6875"	
45/64	0.7031"	18 mm = 0.7087"
23/32	0.7188"	

FRACTION	DECIMAL	MM TO INCHES
47/64	0.7344"	19 mm = 0.7480"
3/4	0.750"	
49/64	0.7656"	
25/32	0.7813"	20 mm = 0.7874"
51/64	0.7969"	
13/16	0.8125"	21 mm = 0.8268"
53/64	0.8281"	
27/32	0.8438"	
55/64	0.8594"	22 mm = 0.8661"
7/8	0.875"	
57/64	0.8906"	23 mm = 0.9055"
29/32	0.9063"	
59/64	0.9219"	
15/16	0.9375"	24 mm = 0.9449"
61/64	0.9531"	
31/32	0.9688"	25 mm = 0.9843"
63/64	0.9844"	
1	1.000"	

CONVERSION TABLE

UNIT OF MEASURE	MULTIPLIED BY	CONVERTS TO
ft-lbs	x 12	= in-lbs
in-lbs	x 0.0833	= ft-lbs
ft-lbs	x 1.356	= Nm
in-lbs	x 0.0115	= kg-m
Nm	x 0.7376	= ft-lbs
kg-m	x 7.233	= ft-lbs
kg-m	x 86.796	= in-lbs
kg-m	x 10	= Nm
inch	x 25.4	= mm
mm	x 0.03937	= inch
inch	x 2.54	= cm
mile (mi)	x 1.6	= km
km	x 0.6214	= mile
ounces (oz)	x 28.35	= grams (g)
fluid ounces (fl oz)	x 29.57	= cubic centimeters (cc)
cubic centimeters (cc)	x .03381	= fluid ounces
grams (g)	x 0.035	= ounces
pounds (lb)	x 0.454	= kg
kilogram (kg)	x 2.2046	= lbs
cubic inches (cu in)	x 16.387	= cc
cubic centimeters (cc)	x 0.061	= cubic inches
US quarts	x 0.946	= liters (L)
liters (L)	x 1.057	= US quarts
US gallons	x 3.785	= liters (L)
liters (L)	x 0.264	= US gallons
PSI	x 6.895	= kilopascals (kPa)
kilopascals (kPa)	x 0.145	PSI
π (3.14) x Radius^2 x Height =		= cylinder volume
°C to °F:	9/5 (°C + 32)	= °F
°F to °C:	5/9 (°F − 32)	= °C

FAHRENHEIT TO CELSIUS

°C to °F: 9 (°C + 40) ¸ 5 - 40 = °F

°F to °C: 5 (°F + 40) ¸ 9 - 40=°C

DEGREES F	DEGREES C
32	0
41	5
50	10
59	15
68	20
77	25
86	30
95	35
104	40
113	45
122	50
131	55
140	60
149	65
158	70
167	75
176	80
185	85
194	90
203	95
212	100

NOTES

CHAPTER 2
MAINTENANCE

2

GENERAL INFORMATION 2.3
MAINTENANCE TOOLS 2.3
LUBRICANTS / CHEMICALS 2.3
TUNE UP SPECIFICATIONS 2.3
OIL CHANGE SPECIFICATIONS 2.4
PERIODIC MAINTENANCE 2.5
PERIODIC MAINTENANCE INTERVAL TABLE 2.5
AIR FILTER 2.6
ENGINE OIL LEVEL 2.9
ENGINE OIL AND FILTER CHANGE 2.10
REVERSE IDLER SHAFT LUBRICATION 2.10
IDLE SPEED / FAST IDLE SPEED 2.11
TIRE PRESSURE 2.11
TIRE INSPECTION 2.12
THROTTLE CABLE INSPECTION / LUBRICATION 2.12
THROTTLE CABLE FREE PLAY 2.13
CRUISE CONTROL CABLE 2.13
FRONT BRAKE LEVER INSPECTION 2.13
FRONT BRAKE LEVER LUBRICATION 2.14
FRONT BRAKE LEVER REACH (IF EQUIPPED) 2.14
CLUTCH LEVER LUBRICATION 2.15
CLUTCH LEVER FREE PLAY (CABLE) 2.16
FRONT BRAKE FLUID LEVEL 2.16
REAR BRAKE FLUID 2.17
FRONT BRAKE PAD INSPECTION 2.18
REAR BRAKE PAD INSPECTION 2.18
SHIFT PEDAL 2.19
REAR BRAKE PEDAL 2.19
FOOT CONTROL ADJUSTMENT 2.19
CRANKCASE VENTILATION SYSTEM 2.20
EVAPORATIVE EMISSION CONTROL SYSTEM (CALIFORNIA MODELS) 2.20
FUEL FILTER 2.20
FUEL SYSTEM INSPECTION 2.20
SPARK PLUG REMOVAL & INSPECTION 2.21
SPARK PLUG INSTALLATION 2.21
BATTERY 2.21
BATTERY CHARGING 2.22
BATTERY STORAGE 2.22
BATTERY INSPECTION 2.22
BATTERY REMOVAL 2.22
BATTERY INSTALLATION 2.23
ENGINE COMPRESSION TEST 2.23

CYLINDER LEAKAGE TEST 2.24
ENGINE COMPRESSION TEST (WET) 2.24
DRIVE BELT WEAR ANALYSIS 2.24
DRIVE BELT CONDITION 2.25
DRIVE BELT TENSION GAUGE 2.25
DRIVE BELT TENSION - INSPECTION 2.26
SPROCKET INSPECTION 2.27
DRIVE BELT CLEANING 2.27
DRIVE BELT ADJUSTMENT / ALIGNMENT 2.28
HEADLAMP AIM INSPECTION 2.30
HEADLAMP AIM ADJUSTMENT 2.31
SIDE-STAND INSPECTION 2.32
SIDESTAND PAD INSPECTION 2.32
SIDESTAND & SPRING REMOVAL 2.32
SIDESTAND PAD REPLACEMENT (TYPICAL) 2.33
REAR SUSPENSION / SWINGARM INSPECTION 2.34
REAR SUSPENSION AIR PRESSURE ADJUSTMENT 2.35
FRONT FORK / SUSPENSION INSPECTION 2.37
FUSE REPLACEMENT (MAIN FUSE BOX) 2.38
FUSE REPLACEMENT (REMOTE FUSES) 2.38
FASTENERS 2.39
LOCK AND IGNITION SWITCH LUBRICATION 2.40
CLEANING 2.40
WINDSHIELD CARE 2.41
STORAGE 2.41
SUEDE FINISH CARE 2.41

GENERAL INFORMATION

MAINTENANCE TOOLS

- Belt Tension Gauge PV-43532 (Sonic Tension Meter is optional and commercially available)
- Compression Gauge Set PV-33223
- Victory Air Pump & Gauge 2876654 or PV-48909
- Cross Roads / Cross Country Fuel Tank Fitting plug tool PV-50251 (9.5mm) *or* PV-50567 (11.8mm)

LUBRICANTS / CHEMICALS

Visit www.purevictorypolishes.com for a complete list of available cleaning products. See Cleaning, page 2.40 for cleaning guidelines.

MAINTENANCE PRODUCT PART NUMBERS

PRODUCT	PART NUMBER
All Purpose Grease	2872187
Brake Cleaner	2872191
Brake Fluid, DOT 4	2872189
Crankcase Sealant (Loctite Ultra Black 598)	Commercially Available
Dielectric Grease (Nyogel™)	2871329
Fork Oil - Cartridge Forks (KYB)	2874568
Fuel Additive, Carbon Clean	2872190
Fuel Stabilizer	2872280
Hand Grip Adhesive (Three Bond 1501) (10ml tube)	2872575
Moly Assembly Paste	2871460
Multi-Purpose Lubricant	2872863
Oil Change Kit	2873551
Paint Wax and Final Finish	2872193
Semi-Synthetic 20W/40 Engine Lubricant	2872175 (Quart) 2872176 (Gallon)
Vinyl and Rubber Dressing	2872194

TUNE UP SPECIFICATIONS

ITEM	2012-2014 SPECIFICATIONS
Brake Pedal Freeplay (Rear)	1-2mm (.031") Gap At Pedal Stop
Brake Pad Friction Material Thickness (All)	1.0 mm (.039 inch) Minimum
Clutch Lever Freeplay (Cable)	0.5 - 1.5mm (0.020-0.060")
Compression Pressure (Cylinder)	210-225 (1448-1551 kPa) (Engine Compression Test, page 2.23)
Drive Belt Deflection (See Drive Belt Tension - Inspection, page 2.26)	32 mm +/- .5mm (1 1/4" +/- 1/64) with 10 lb force
Drive Belt Frequency Using Sonic Tension Meter	Frequency: 20 Hz +/- 1 Hz Belt Mass Constant: 8.4 Span: 708.65mm
Drive Belt Width / Teeth / Pitch	28mm / 154T / 14mm
Idle Speed / Fast Idle Speed	NOT ADJUSTABLE (ECM / IAC valve controlled)
Oil Pressure, Lubrication @ 3000 rpm	552 kPa (80 psi) (Minimum 40 psi)
Oil Pressure, Cooling @ 3000 rpm	(See special notes Lubrication & Cooling System Specifications , page 4.3)
Rear Shock Air Pressure	SeeRear Suspension Air Pressure Adjustment, page 2.35 or decal on right saddlebag lid.
Spark Plug Type / Gap	NGK DCPR6E / 0.8 mm (0.032")
Throttle Cable Freeplay	2 - 4 mm (5/64 - 5/32") (Throttle Cable Free Play, page 2.13)
Tire Pressure	Refer to Tire Inspection, page 2.12 or Manufacturing Decal on steering head.

OIL CHANGE SPECIFICATIONS

Start the engine and warm it up for several minutes. While warming up, check for oil leaks. If any leaks are found, stop the engine immediately and determine the source of the problem before starting the engine again.

DESCRIPTION	TORQUE
Drain Plug	15 ft-lbs (20 Nm)
Oil Filter	3/4 full turn after contacting seal surface

Oil Specifications

Oil Type	Victory Semi-Synthetic 20W40 or 15W60 synthetic Engine Oil
Oil Capacity (Oil & Filter Change)	Approximately 4.25 liters (4.5 quarts)
Oil Capacity (Dry)	Approximately 4.75 liters (5.0 quarts)

Victory recommends the use of Victory Synthetic Blend 20W40 engine oil for all temperatures or 15W60 synthetic as an optional accessory oil. If Victory oil is not available, use a high quality 20W40 motorcycle designed for use with wet clutches (such as those with a JASOMA rating).

CAUTION
Do not put chemical additives in the oil. Victory motorcycle oil has been specially designed for this application. Additional additives are not necessary and have not been approved by Victory Engineering.

PERIODIC MAINTENANCE

PERIODIC MAINTENANCE INTERVAL TABLE

ENGINE	ODOMETER READING IN MILES (KILOMETERS)																			
Component (see operation codes below)	500 (800)		5000 (8,000)		10,000 (16,000)		15,000 (24,000)		20,000 (32,000)		25,000 (40,000)		30,000 (48,000)		35,000 (52,000)		40,000 (64,000)		45,000 (72,000)		50,000 (80,000)
Air Filter	I		I		R		I		R		I		R		I		R		I		R
Crankcase Ventilation System	I		I		I		I		I		I		I		I		I		I		I
Drive Belt	I		I		I		I		I		I		R		I		I		I		I
Engine Compression	I				I				I				I				I				I
Engine Oil*	R		R		R		R		R		R		R		R		R		R		R
Engine Oil Filter*	R		R		R		R		R		R		R		R		R		R		R
Evaporative Emission Control System (CA. Only)	I		I		I		I		I		I		I		I		I		I		I
Exhaust System	I		I		I		I		I		I		I		I		I		I		I
Fuel Filter											R										R
Fuel System	I		I		I		I		I		I		I		I		I		I		I
Spark Plugs	I		I		I		I		I		I		R		I		I		I		I
Throttle Cable	I		I		L		I		L		I		L		I		L		I		L
CHASSIS	**ODOMETER READING in MILES (KILOMETERS)**																			
Battery	I		I		I		I		I		I		I		I		I		I		I
Brake Fluid**	I		I		I		I		I		I		R		I		I		I		I
Brake Pads	I		I		I		I		I		I		I		I		I		I		I
Clutch Lever	L		I		L		I		L		I		L		I		L		I		L
Clutch Lever Freeplay	I		I		I		I		I		I		I		I		I		I		I
Control Cable Ends	I		I		L		I		L		I		L		I		L		I		L
Fasteners	I		I		I		I		I		I		I		I		I		I		I
Front Brake Lever	L		I		L		I		L		I		L		I		L		I		L
Front Fork Oil**	I		I		I		R		I		I		R		I		I		R		I
Front Forks and Front Axle	I		I		I		I		I		I		I		I		I		I		I
Gear Shift Pedal	I		I		L		I		L		I		L		I		L		I		L
Headlamp	I				I				I				I				I				I
Rear Brake Pedal	I		I		L		I		L		I		L		I		L		I		L
Rear Shock Absorber	I		I		I		I		I		I		I		I		I		I		R
Rear Wheel Alignment	I		I		I		I		I		I		I		I		I		I		I
Road Test	P		P		P		P		P		P		P		P		P		P		P
Sidestand / Sidestand Pad	I		I		L		I		L		I		L		I		L		I		L
Steering Bearings	I		I		I		L		I		I		L		I		I		L		I
Suspension Linkage, Rear	I		I		I		L		I		I		L		I		I		L		I
Swing Arm and Rear Axle	I		I		I		I		I		I		I		I		I		I		I
Tires / Wheels	I		I		I		I		I		I		I		I		I		I		I

I - Inspect (tighten, clean, adjust, correct or replace if necessary) **R** - Replace/Rebuild

L - Lubricate with proper lubricant as directed. **P** - Perform

* Replace at specified interval or annually. If driven in extreme conditions.

** Replace at specified interval or every 2 years

AIR FILTER

The air filter element is a dry, treated paper design. Do not apply air filter oil.

The fuel line is secured to the main wiring harness by a tie strap. The fuel line must be disconnected from the fuel pump fitting (A) before removing the tank.

- If fuel tank will be removed for other maintenance or inspection, refer to removal procedure.

Fuel Tank Removal, page 5.19

⚠ WARNING

Review gasoline warnings in FUEL SAFETY PRECAUTIONS, page 5.3. Allow engine and exhaust to cool completely before disconnecting fuels line or removing tank.

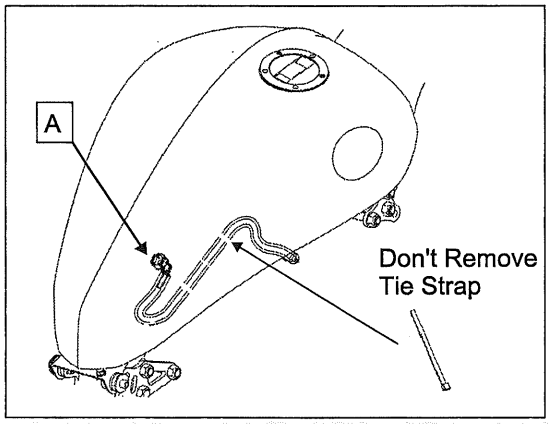

NOTE

Do not cut or remove tie strap.

1. Remove side covers and seat (Side Cover Removal, page 3.27).
2. Disconnect single vent line.

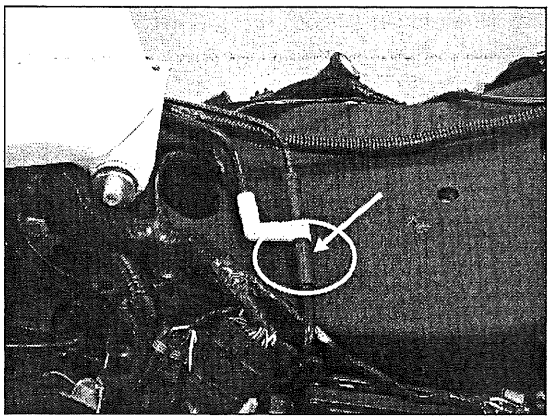

3. Remove ground wire bolt (B) and rear tank bolts (C) and collect flange bushings (D) and isolators (E).

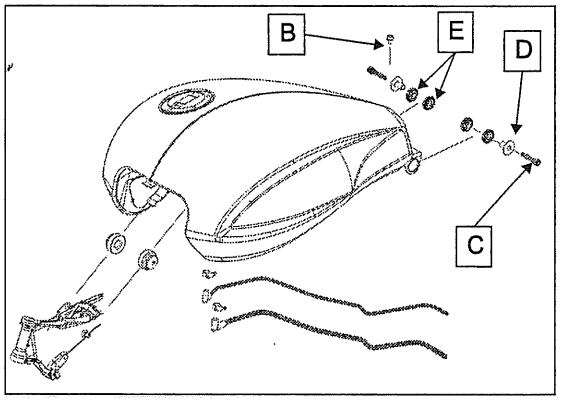

4. Secure handlebars in the straight ahead position. Place a protective cloth on front of tank to prevent damage.
5. Pivot rear of tank up to gain access to fuel line/fuel fitting. Support rear of tank.

6. Reach under tank and locate pump harness electrical connector. Carefully lift tab (F) and disconnect harness.

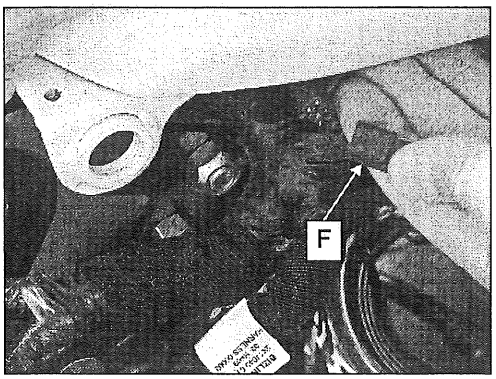

CAUTION

Fuel Tank Removal: DO NOT move tank rearward prior to disconnecting fuel line. To disconnect the fuel line fitting located on the bottom of the tank, lift up rear of tank allowing tank to pivot on front isolators. The fuel line is secured to the main wiring harness by a tie strap that should not be removed.

7. Disconnect fuel line from pump by squeezing release tabs (G) on both sides of the fitting. Pull fuel line straight down off pump fitting.

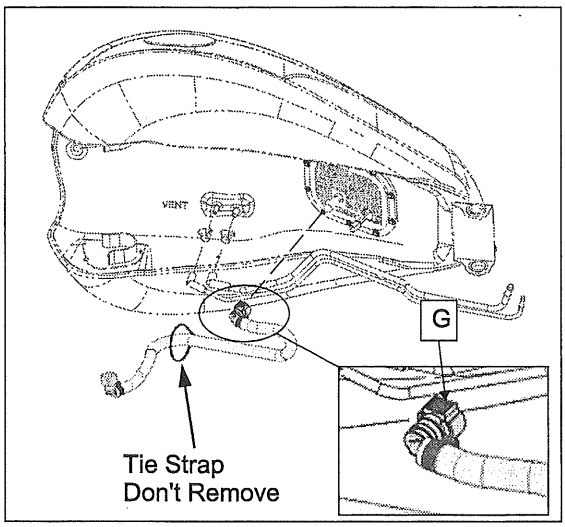

8. Install fuel tank fitting plug tool PV-50251 (9.5mm fittings) or PV-50567 (11.8mm fittings) onto fuel pump fitting to protect the fitting and prevent fuel for seeping out of tank.

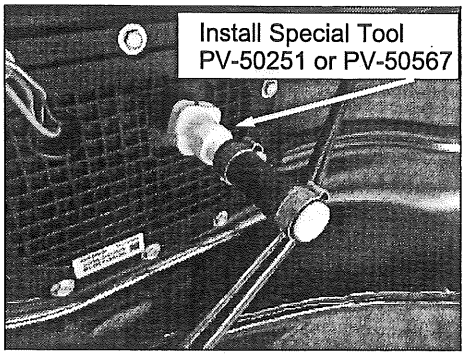

9. Grasp tank at front edge. Lift rear of tank high enough for the fuel pump fitting and the plug tool to clear the frame.
10. Carefully pull tank rearward to release front tank mounts from front isolators.
11. Place tank on suitable flat surface that will not scratch fuel tank. Do not place fuel tank on frame/ seat area of the motorcycle.
12. *Loosen* (3) filter retainer screws (E).
13. Loosen (2) filter mount screws (F) only until filter can be removed. Do not remove screws from filter.

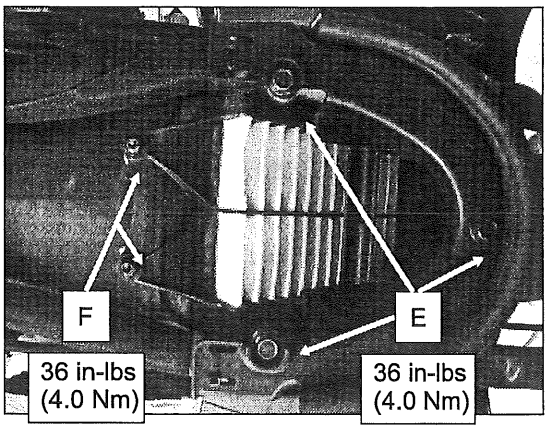

14. Lift retainer up, then lift filter and slide it rearward to remove.

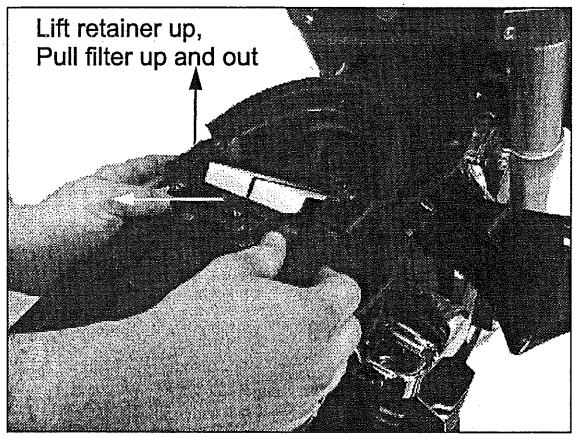

Air Filter Installation

15. Clean filter sealing surface on frame.
16. Install new air filter with captive screws. Check edges of filter to be sure they are seated properly in flange.
17. Tighten filter mount screws and retainer screws.

TORQUE
Filter Mount Screws: **36 in-lb (4 Nm)**

18. Reinstall fuel tank by performing steps 1-14 on the next page.

Reinstall Fuel Tank

19. Secure handlebars in the straight ahead position. Place a protective cloth on front of tank to prevent damage.
20. Carefully place fuel tank on motorcycle frame. Be careful not to snag or catch special tool PV-50251 or fuel tank fitting on frame of vehicle.
21. Assemble vent and drain lines to tank (if removed).

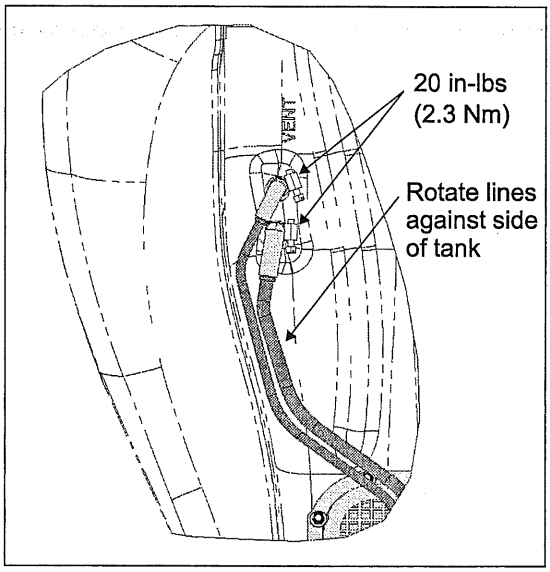

22. Assemble front isolators to frame. Apply alcohol, soapy water solution, or rubber lubricant to ease tank installation.
23. Slide tank onto front isolators and slide tank fully forward. Pivot rear of tank up to gain access to fuel line/fuel fitting. Support rear of tank.
24. Remove fuel tank fitting plug tool PV-50251 from fuel pump fitting by pressing in on center button of the plastic coupler.
25. Connect fuel line to fuel pump. Push fitting straight onto pump fitting until it clicks in place. You will hear a noticeable clicking sound when the fitting engages properly. Pull lightly to be sure fitting is fully installed.
26. Connect fuel pump wire harness electrical connector.

27. Install rear isolators and flange bushings. Verify fuel line is routed and secured properly before lowering tank.

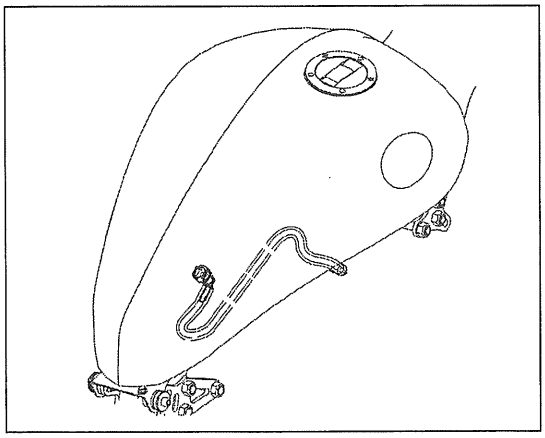

28. Lower rear of tank and install bolts. Torque to specification. Ref. "A" below.

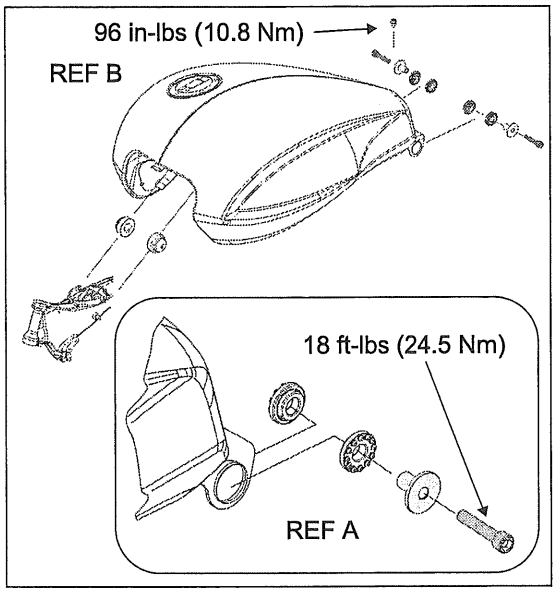

29. Connect vent, drain, and ground wire. Torque ground wire bolt to specification. Ref. "B" on above photo.

TORQUE
Ground Wire Bolt: **96 in-lb (11 Nm)**

30. Install seat and side covers.

ENGINE OIL LEVEL

1. Warm the engine for several minutes until operating temperature is reached.
2. Stop engine and wait for 3-5 minutes.
3. Place the machine on a level area and hold it in an upright position.
4. Remove dipstick ① and wipe it clean.

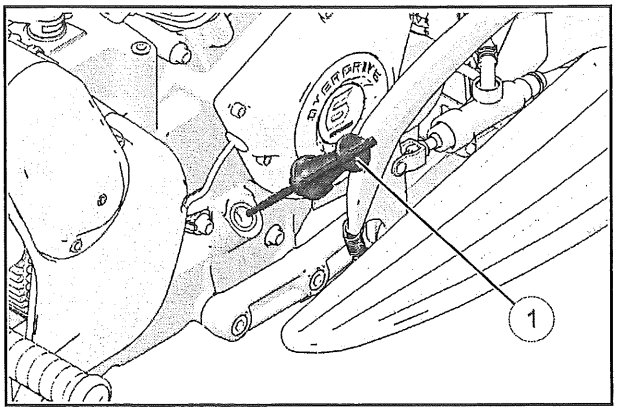

5. Screw dipstick in until seated.
6. Remove dipstick and view oil level.
7. Oil level should be between ADD and FULL lines on dipstick. If oil level is low, add Victory 20-40 Semi-Synthetic or optional Victory 15W60 Synthetic engine oil to raise level to FULL mark. DO NOT overfill.

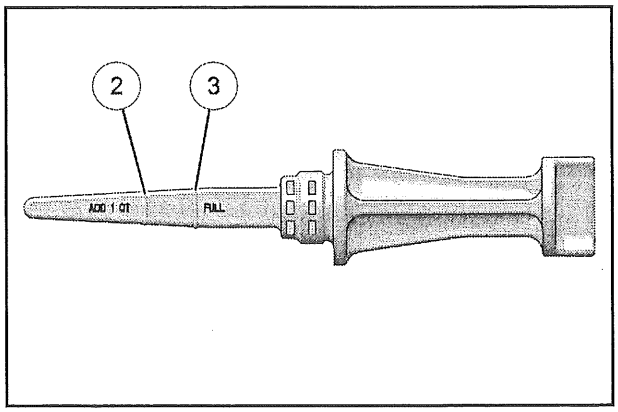

②	ADD
③	FULL

ENGINE OIL AND FILTER CHANGE

Change engine oil at intervals listed in the Periodic Maintenance Table, page 2.5.

1. Start and run engine until it reaches normal operating temperature. Stop engine.
2. Securely support motorcycle on sidestand.
3. Place an oil drain pan under drain plug ① and filter ②.

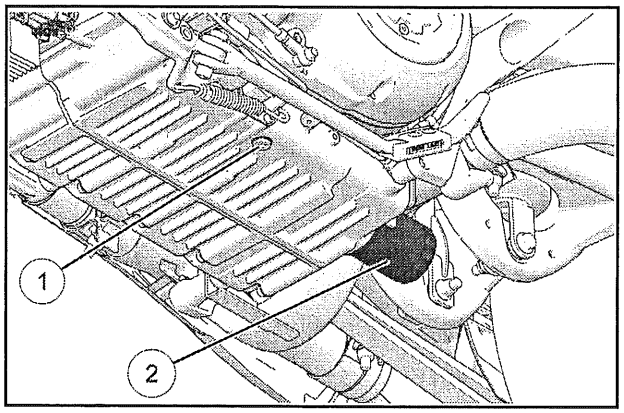

DESCRIPTION	TORQUE
Drain Plug	15 ft-lbs (20 Nm)
Oil Filter	3/4 full turn after contacting seal surface

4. Remove drain plug ① and allow oil to drain completely.
5. Remove oil filter ② with a filter wrench.
6. Clean drain plug sealing surface on crankcase. Replace seal washer on drain plug.
7. Install drain plug and tighten to proper torque. DO NOT overtighten.
8. Clean oil filter gasket sealing surface on crankcase.
9. Make sure new oil filter gasket is properly seated in the new oil filter, and apply a thin film of clean engine oil to the gasket. Screw new filter on until gasket contacts the filter mounting plate. Tighten filter by hand an additional 3/4 turn.
10. Add *approximately* **4 1/2 quarts (4.0 liters)** of oil through dipstick hole. Use only Victory brand Semi-Synthetic 20W-40 Motor Oil or equivalent oil for use with wet clutches such as JASO MA rating.

CAUTION

Do not add chemical additives to the engine oil. Some automotive engine oils contain additives that could damage or reduce the service life of the wet clutch in the motorcycle.

11. Reinstall dipstick. Start and run engine until it reaches normal operating temperature.

NOTE

After an oil change, the low oil pressure indicator light could remain on longer than usual. Do not rev the engine while the light is on. If light does not go out within 5 seconds of starting the engine, stop the engine immediately and investigate.

12. Stop engine and make sure there are no leaks around the drain plug and oil filter.
13. Check oil level and adjust if needed.

NOTE

Recycle used oil and filter in accordance with local regulations.

ENGINE OIL CAPACITY AT CHANGE (WITH FILTER)	Approx. 4.5 qt. (4.0 - 4.25 liter)
ENGINE OIL CAPACITY AT CHANGE (WITHOUT FILTER)	Approx. 4.0 qt. (3.75 - 4.0 liter)

REVERSE IDLER SHAFT LUBRICATION

On motorcycles equipped with Reverse, lubricate the reverse idler shaft at every oil change or as required for smooth reverse actuator lever movement.

1. Remove access bolt (A).
2. Spray Victory Multi-Purpose spray lubricant (2872863) into center of shaft for 2-3 seconds while moving the Reverse actuator lever up and down through the travel range until it operates smoothly and freely.

3. Install screw and torque to specification.

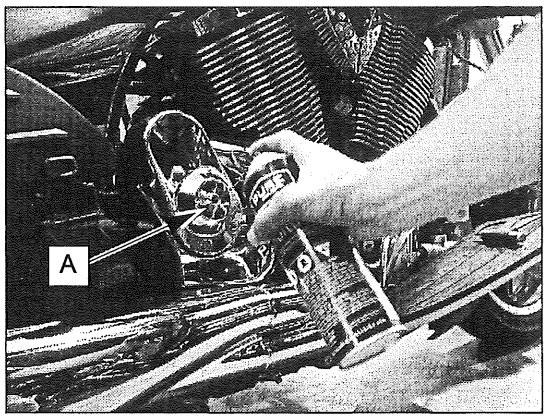

TORQUE
Reverse Shaft Screw: **60 in-lb (7 Nm)**

IDLE SPEED / FAST IDLE SPEED

NOTE

Idle speed is continuously monitored and adjusted by the ECM via the IAC valve. DO NOT tamper with or attempt to "adjust" the throttle plate flow screw (A) or plate stop screw (B)! They are factory pre-set. If idle is erratic or if idle speed is incorrect, refer to troubleshooting in this section to find the cause of the problem. Tampering with these screws will not correct an idle speed or control problem.

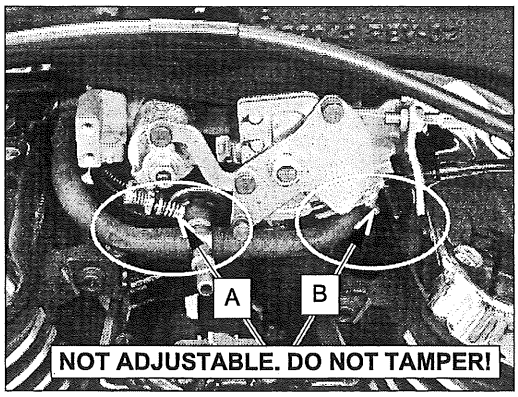

TIRE PRESSURE

⚠ WARNING

Operating the motorcycle with improper tires or with improper or uneven tire pressure could cause loss of control or accident. Always use the correct size and type of tires specified for your vehicle. Always maintain proper tire pressure as recommended in the owner's manual and on safety labels.

NOTE

Refer to the Manufacturing Information label (located on the steering head) for more information. Tire pressure should be checked when the tires are cool and on a regular basis. Tire pressure may be low despite tire appearance.

2012–2016 Cross Country / Roads

Tire ↓	Load →	Up to 200 pounds (91 kg) load	201 (91 kg+) – Max Load Capacity
FRONT: Dunlop Elite 3 130/70R18 63H		38 psi (262 kPa)	38 psi (262 kPa)
REAR: Dunlop Elite 3 180/60R16 M/C 80H		40 psi (276 kPa)	40 psi (276 kPa)

2016 Magnum / NESS Magnum / Magnum X-1

Tire ↓	Load →	Up to 200 pounds (91 kg) load	201 (91 kg+) – Max Load Capacity
FRONT: Dunlop D418F Elite 3 120/70R21 M/C 62V		37 psi (255 kPa)	37 psi (255 kPa)
REAR: Dunlop D418 Elite 3 180/60R16 M/C 80H		40 psi (276 kPa)	40 psi (276 kPa)

TIRE INSPECTION

1. Inspect tires for weather checking, cuts, embedded foreign objects, abnormal wear, and surface damage.
2. Inspect front and rear wheels for damage / runout. Refer to Specifications, page 12.4 and Specifications - Rear Wheel And Suspension, page 13.3 for procedure.
3. Measure tread depth at center of tread (C). Be sure tire pressure is set correctly before measuring tread depth. Measure in 3-4 places equally spaced around the tire and record the smallest measurement.

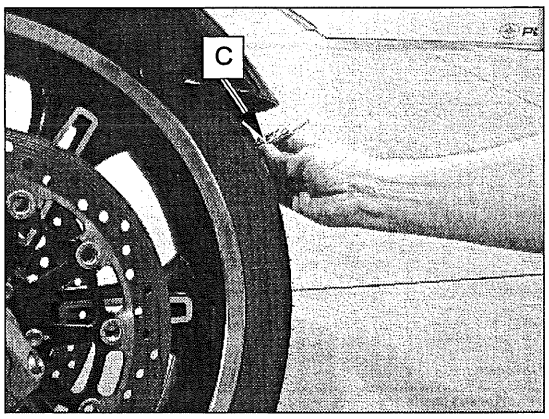

⚠ WARNING

Operating the motorcycle with worn tires could cause loss of control or accident. When a tire reaches the minimum tread depth listed below, replace the tire immediately.

Minimum Tire Tread Depth

FRONT TIRE MINIMUM TREAD DEPTH	REAR TIRE MINIMUM TREAD DEPTH
1.6mm (.063") (1/16 inch)	1.6mm (.063") (1/16 inch)

THROTTLE CABLE INSPECTION / LUBRICATION

NOTE

Control cable casings are lined with a low friction sleeve and are factory lubricated for reliable operation. Periodic lubrication of cables is not required and could be detrimental to cable performance. Only cable ends must be periodically inspected and lubricated in accordance with the Periodic Maintenance Schedule. See Throttle Cable, page 12.23 to lubricate cable ends at the throttle grip.

CAUTION

Do not kink, bend or twist inner cable or cable casing during removal or installation.

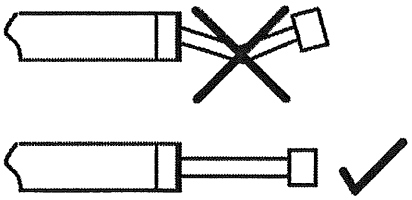

1. Remove triangular IAC cover from right side of motorcycle by pulling straight outward at each corner to release the three tabs.
2. Inspect cables for proper routing, smooth movement, and for damage to the external casing. Inspect the exposed inner cable for fraying, kinks, or corrosion. Replace any damaged cables or cables that are sticky or sluggish to return.
3. Spray each barrel end (A) with Victory Multi Purpose Lubricant 2872863.

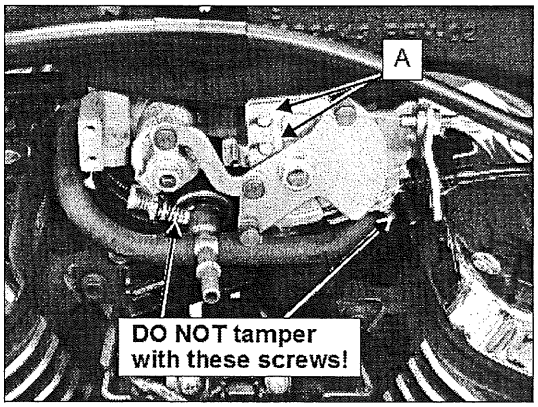

4. After lubricating barrel ends, inspect cable free play. Cruise Control Cable information can be found inCruise Control Cable, page 2.13.

THROTTLE CABLE FREE PLAY

Check the amount of control grip movement from the rest position to the point of cable resistance.

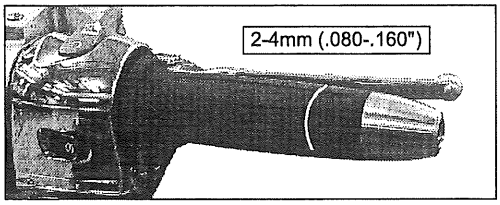

Throttle Opening Cable Adjustment

1. With engine OFF and handlebars pointed straight ahead, loosen cable lock nuts by turning them counter-clockwise (viewed from throttle grip) until they stop against the throttle housing.
2. Turn both cable adjusters toward lock nuts until they lightly contact the lock nuts.
3. Turn throttle opening cable adjuster (front cable) out until freeplay is within specified range.
4. Hold adjuster in place and tighten lock securely (by hand) against the adjuster.

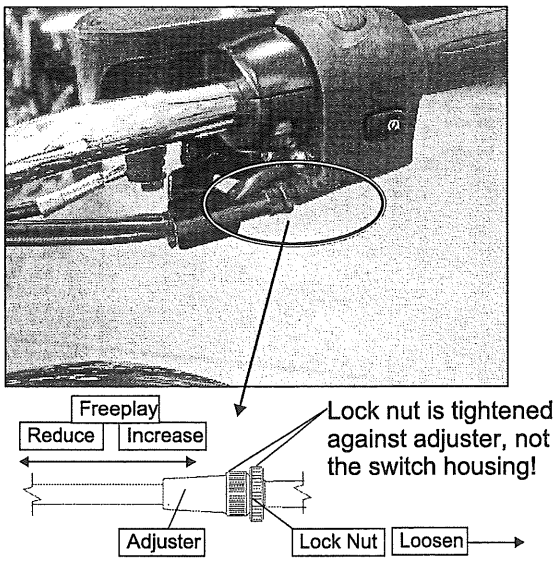

Throttle Closing Cable Adjustment

5. Hold throttle grip lightly in closed position.
6. Turn throttle closing cable (rear cable) adjuster out until you feel slight resistance at the adjuster.
7. Hold adjuster in place and tighten lock nut securely (by hand) against the adjuster.
8. Verify throttle grip moves smoothly and returns freely when released in all handlebar positions.

2

CRUISE CONTROL CABLE

(Cross Country model or if equipped with accessory)

1. Remove triangular IAC cover from right side of motorcycle by pulling straight outward at each corner to release the three tabs.
2. Inspect throttle body end of cruise control cable in area (A) for fraying and be sure end is secured in bracket (B). Inspect outer cable casing for damage.

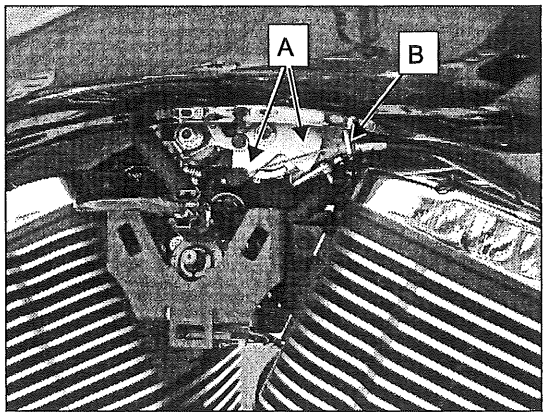

3. Inspect exposed inner cable for fraying, kinks, or corrosion. Replace any damaged, frayed or corroded cables.
4. Spray each barrel end with Victory Multi Purpose Lubricant 2872863.

NOTE

The cruise control cable (if equipped) is not manually adjustable and does not require periodic adjustment.

FRONT BRAKE LEVER INSPECTION

1. Pull brake lever and release it. Lever should move smoothly without binding and return freely to the rest position.
2. Pull the lever. The lever should be firm not spongy. Bleed brakes and inspect system if brake lever is not firm.

FRONT BRAKE LEVER LUBRICATION

1. Remove nut (C), pivot screw (D), and lever. Lubricate screw, lever bushing, and lever cam (E) with Special Brake Grease (PN 2203685) or Victory All Purpose Grease.
2. Assemble lever, screw, and nut.
3. Tighten screw.
4. Hold screw and tighten nut.
5. Inspect lever movement as described for FRONT BRAKE LEVER INSPECTION above.

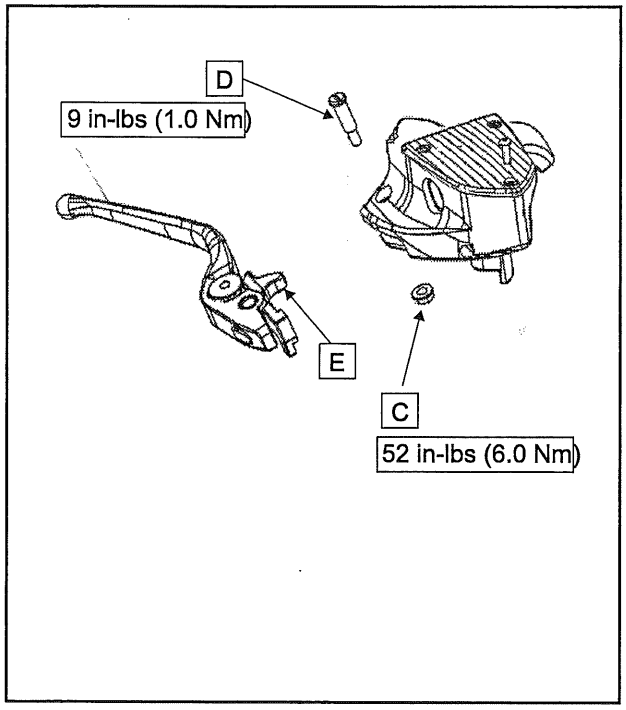

FRONT BRAKE LEVER REACH (IF EQUIPPED)

Front brake lever "reach" (or distance to the hand grip) is adjustable. To adjust lever reach:

- Pull the lever away from grip (1) and *hold.*
- To INCREASE lever reach distance, turn dial (2) to align a lower number with arrow (3) on lever.
- To DECREASE lever reach distance, turn dial to align a higher number with the arrow.

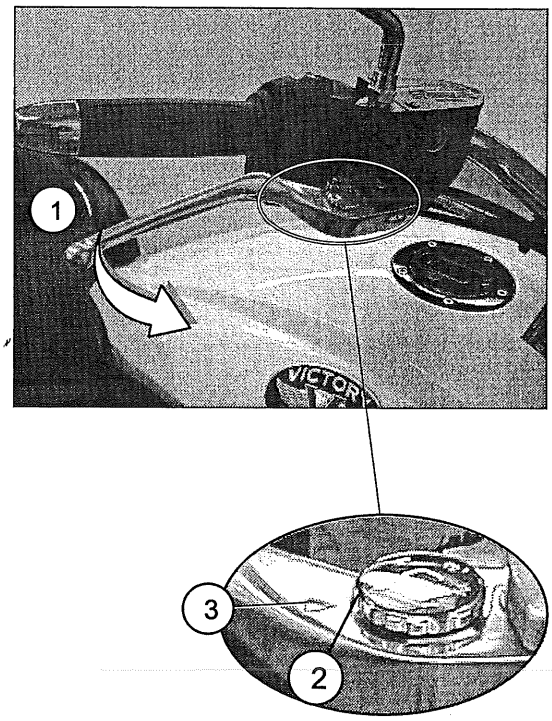

CLUTCH LEVER LUBRICATION

1. Disconnect clutch cable from lifter arm by rotating arm (A) inward with pliers or adjustable wrench. Protect surface of lever arm or use a pliers or adjustable wrench with non-marring jaws.

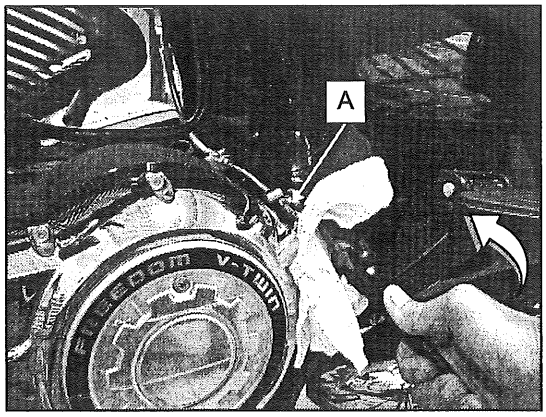

2. Clean lower cable bushing and cable. Inspect inner cable wire for damage or frayed strands. Replace cable if damaged.
3. At handlebar end, pull outer cable casing (B) out of perch and carefully rotate inner cable out of perch and lever. Do not kink cable.

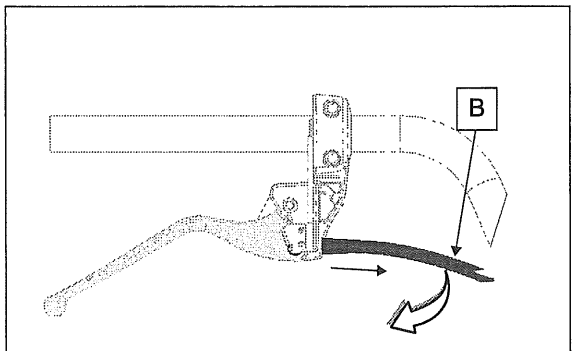

VIEW FROM BOTTOM

4. Remove nut (C). Push pivot bolt upward to remove it, then remove lever pivot bushing (D).

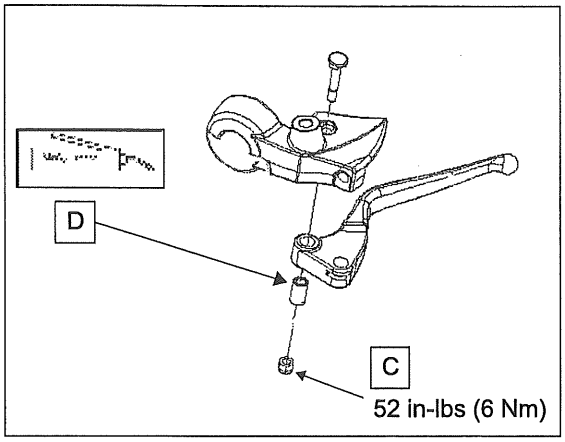

5. Clean all parts. Inspect bushings and lever for wear.
6. Inspect inner cable wire for frayed strands. Replace cable if frayed.
7. Lubricate both lever pivot and cable end bushing with Moly Assembly Paste PN 2871460 or Special Grease PN 2203685.
8. Assemble lever (with bushing) to perch.
9. Install pivot bolt and nut. Torque nut to specification.

TORQUE
Clutch Lever Pivot: **52 in-lb (6 Nm)**

10. Grease cable end.
11. Rotate cable back through slot in perch, and push outer casing back into perch recess.
12. Lubricate lower cable and barrel end.
13. Rotate lifter arm inward with a pliers or adjustable wrench and attach cable to lifter arm.
14. Inspect clutch lever free play and adjust if necessary. Be sure cable and lever operate smoothly without binding.

CLUTCH LEVER FREE PLAY (CABLE)

1. With handlebars pointing straight ahead, measure the clutch lever free play (E).

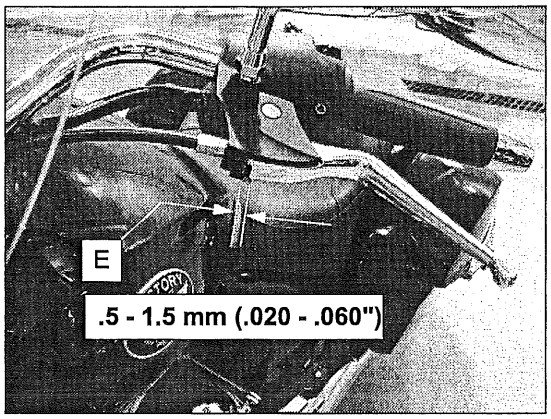

2. If adjustment is required, hold cable (F) and loosen adjuster jam nut (G).
3. Turn cable adjuster (H) in or out until clutch freeplay is correct.

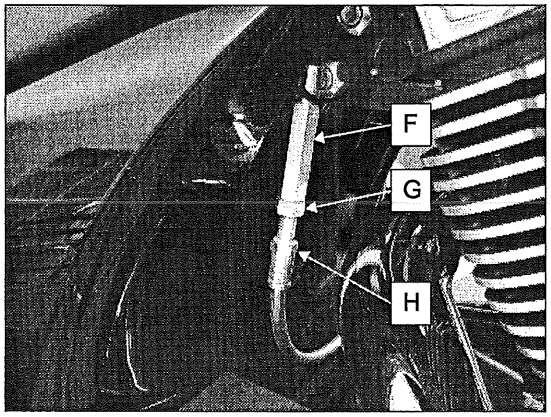

4. Tighten adjuster jam nut securely to cable.

FRONT BRAKE FLUID LEVEL

1. Set vehicle upright on a level surface and turn handlebars until top of reservoir is level.

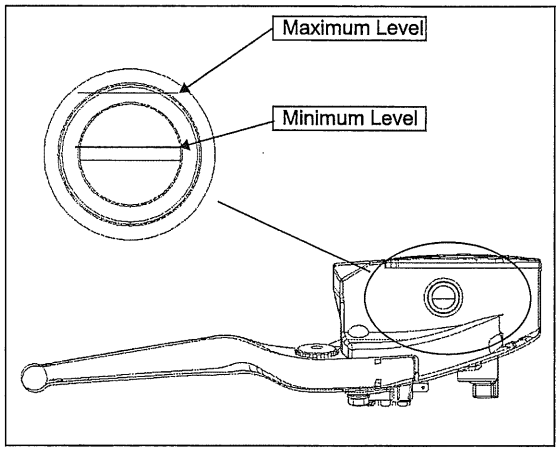

2. View fluid level through sight glass.
3. If low, check brake pads for wear (Front Brake Pad Inspection, page 2.18) and check the brake system for leaks. Check for signs of fluid leaks around hoses, fittings, reservoir, and brake caliper pistons (behind brake pads).
4. To add fluid, remove reservoir cover screws, cover, and diaphragm.
5. Add DOT 4 Brake Fluid from a sealed container to the proper level.
6. Clean and dry all sealing surfaces of reservoir, reservoir cover, diaphragm, and diaphragm plate with a clean lint-free cloth.
7. If the diaphragm is extended, return it to the retracted (neutral) position (A).

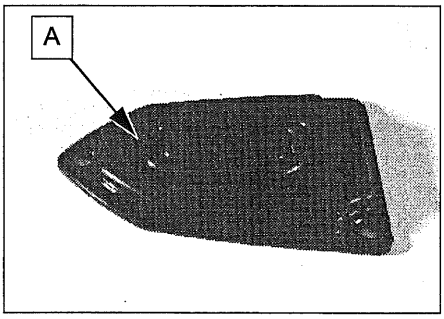

8. Reinstall diaphragm, plate, and cover.

9. Torque screws to specification.

TORQUE
Brake Reservoir Cover: **25 in-lb (3 Nm)**

10. Check for deterioration of hoses.

REAR BRAKE FLUID

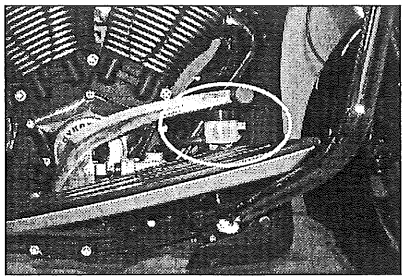

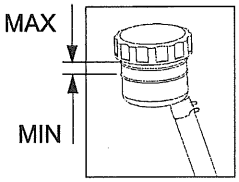

1. Set vehicle upright on a level surface and inspect rear brake fluid reservoir level.
2. Level must be between MIN and MAX lines on reservoir.
3. If level is low, check brake pads for wear and inspect rear brake system for leaks. Check for signs of brake fluid leaks around hoses, fittings, reservoir, and brake caliper pistons (behind brake pads).
4. To add fluid, remove reservoir cover with diaphragm by turning it counter-clockwise (as viewed from top).
5. Add DOT 4 Brake Fluid from a sealed container to bring level between MIN and MAX marks.
6. Clean and dry all sealing surfaces of reservoir, reservoir cover, diaphragm, and diaphragm plate with a clean lint-free cloth.
7. If diaphragm is extended, return it to the retracted (neutral) position (B).

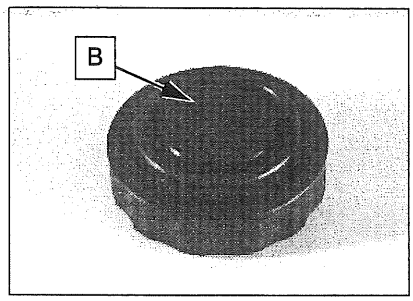

8. Check for deterioration of hoses.

FRONT BRAKE PAD INSPECTION

Wear indicator grooves are provided on each front brake pad to allow for a visual inspection without pad removal.

Inspect pads by viewing from rear of caliper.

Replace pads if worn to bottom of grooves or near the minimum thickness.

Refer to Front Brake Pad Replacement, page 15.25 to remove pads for further inspection or to replace if worn.

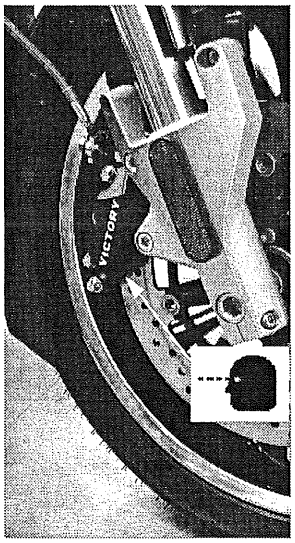

Minimum Thickness:
Front Pad: 1.5mm (.060 in.)

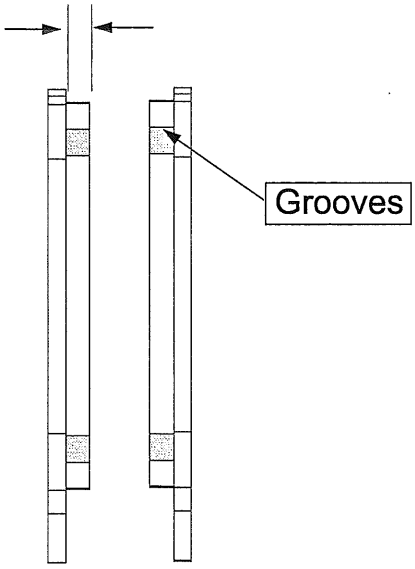

REAR BRAKE PAD INSPECTION

Wear indicator grooves are provided on each rear brake pad to allow for a visual inspection without pad removal.

Inspect pads from top of caliper behind swingarm.

Replace pads if worn to bottom of grooves or near the minimum thickness.

Refer to Rear Brake Pad Replacement, page 15.27 to remove pads for further inspection or to replace if worn.

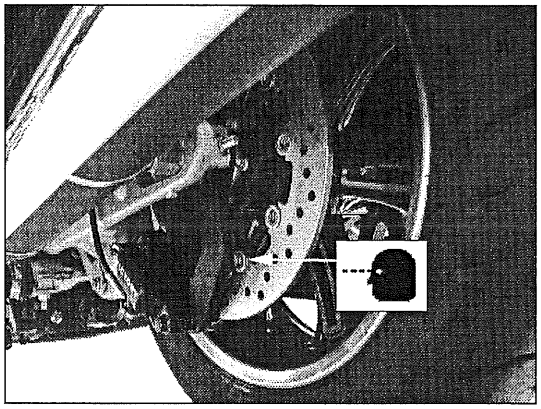

Minimum Thickness:
Rear Pad: 1.5mm (.060 in.)

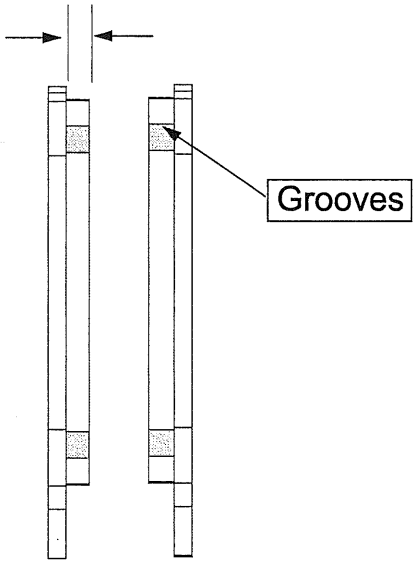

SHIFT PEDAL

1. Check all shift pedal and linkage fasteners to be sure they are tight. Torque values are shown in Shift Linkage / Footrest Fastener Torque, page 9.5.

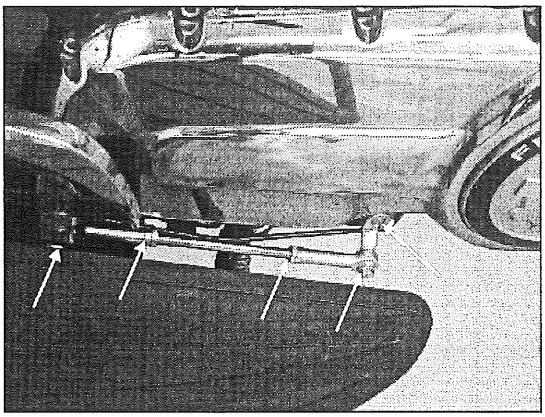

2. Lubricate shift pedal pivot bushing and all pivots with Victory All Purpose Grease P/N 2872187 or Victory Multi-Purpose Lubricant.

REAR BRAKE PEDAL

1. Push brake pedal and release it. Pedal should move smoothly without binding and return freely to the rest position.
2. Push down on brake pedal. The pedal should be firm not spongy. Bleed and inspect rear brake system if pedal is not firm.
3. Lubricate rear brake pedal pivot bushing with Victory All Purpose Grease (P/N 2872187) or Multi-Purpose Lubricant (P/N 2872863).

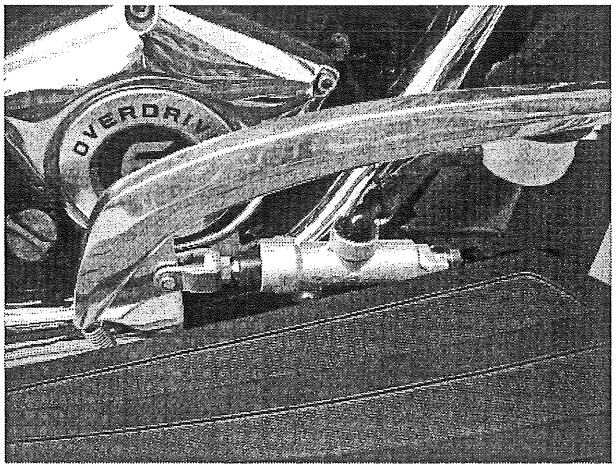

4. Check brake pads for wear as outlined on Rear Brake Pad Inspection, page 2.18.

FOOT CONTROL ADJUSTMENT

The brake pedal and shift pedal can be adjusted to one of three positions. The controls are in the center position as delivered from Victory.

To move the controls to the front or rear position, do the following:

1. Use a 6mm Allen wrench to remove screw (1).
2. Slide the control forward or rearward in its track until the threaded hole of the control aligns with the front (2) or rear (3) screw hole in the footrest support.
3. Install the screw and torque to specification.

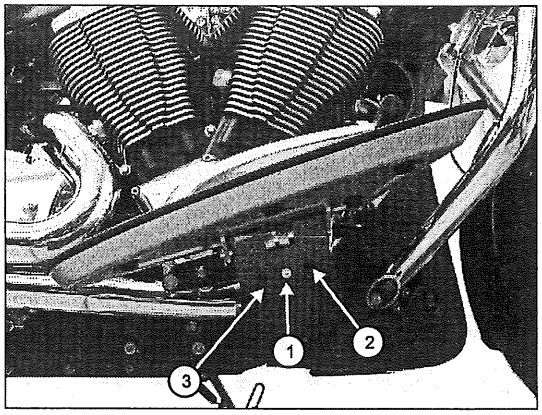

TORQUE
Foot Support: **96 in-lb (11 Nm)**

4. After adjusting shift pedal position, the linkage rod must be adjusted to re-set pedal height.
5. Hold rod ends and loosen both jam nuts (4).

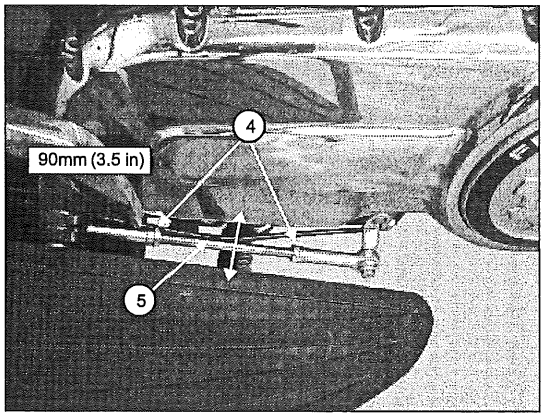

6. Turn linkage rod (5) until center of shift peg is 82.5-102mm above the floor board surface (see Shift Linkage / Footrest Fastener Torque, page 9.5).
7. Tighten jam nuts to specification.

TORQUE
Linkage Rod: **96 in-lb (11 Nm)**

CRANKCASE VENTILATION SYSTEM

1. Inspect condition of breather hose (A) and hose clamps.

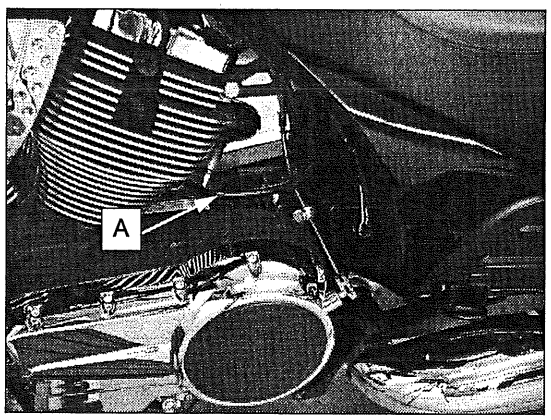

EVAPORATIVE EMISSION CONTROL SYSTEM (CALIFORNIA MODELS)

1. Inspect all Evaporative Emissions Control system hoses and be sure all connection are securely attached.
2. Refer to Fuel Tank Evaporative Emissions System - California Models, page 5.11 for a system diagram and component location.

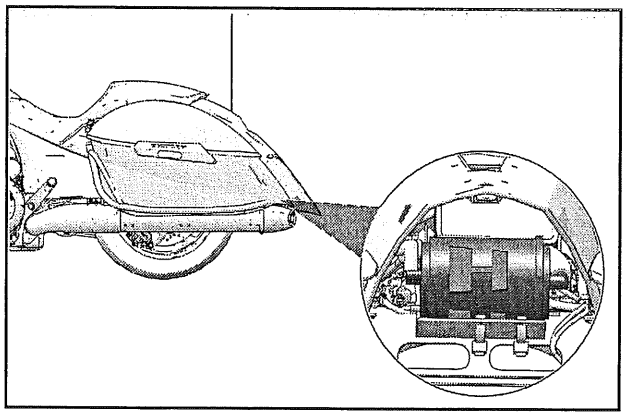

FUEL FILTER

The fuel filter is attached to the electric fuel pump located inside the fuel tank. No periodic fuel filter maintenance is required, however, the fuel filter should be replaced at intervals specified in the Periodic Maintenance Interval Table, page 2.5.

FUEL SYSTEM INSPECTION

Inspect fuel line and system components in accordance with the Periodic Maintenance Table in PERIODIC MAINTENANCE, page .

1. Remove IAC cover from right side (Ignition Switch / IAC Cover, page 3.6).
2. Inspect fuel line and fuel rail for signs of deterioration, damage, abrasion, cracks, leakage, or kinked areas.
3. Replace any components that fail inspection with genuine Victory replacement parts only.
4. Refer to Fuel Injection Component Locations, page 5.38 for a system diagram and component location.

⚠ WARNING
The fuel supply hose and fuel rail are subjected to high pressure. Replace with genuine Victory replacement parts to reduce the possibility of fuel line failure. Be sure fuel lines are routed properly and do not come in contact with sharp or hot objects, or anything that may cause wear or damage.

SPARK PLUG REMOVAL & INSPECTION

⚠ WARNING

HOT COMPONENTS Wear insulated gloves and/or allow engine and exhaust to cool before handling these parts.

1. With engine at room temperature, grasp spark plug boot (A) at base to disconnect. DO NOT pull on wire or spark plug wire may be damaged.

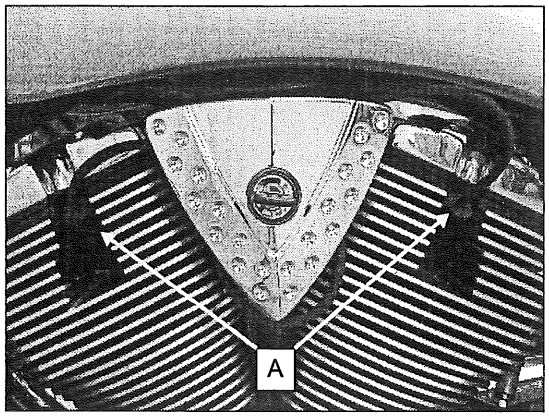

2. Clean area around spark plug base with compressed air to remove loose debris.
3. Remove spark plugs and inspect for insulator damage, worn electrodes and deposits.

SPARK PLUG INSTALLATION

1. Inspect spark plug gap with a wire gauge. If gap adjustment is necessary, bend ground electrode carefully using a spark plug gap tool.

Spark Plug Type: **NGK DCPR6E**

Spark Plug Gap: **.032 - .036 in (0.8 - 0.9 mm)**

2. Apply anti-seize compound sparingly to spark plug threads, avoiding the bottom 2 - 3 threads.
3. Torque spark plugs to specification.

TORQUE

Spark Plug:
12 ft-lbs (16 Nm)

CAUTION

Do not over tighten spark plugs. Damage to the cylinder head or spark plug may result.

BATTERY

This motorcycle is equipped with a maintenance free battery which is located in front of the engine. DO NOT remove cell caps or add distilled water to the battery.

Refer to Charging System Troubleshooting, page 16.8 for battery and charging system diagnostic procedures.

⚠ WARNING

Battery electrolyte is poisonous. It contains sulfuric acid. Serious burns can result from contact with skin, eyes or clothing. Antidote:
External: Flush with water.
Internal: Drink large quantities of water or milk. Follow with milk of magnesia, beaten egg, or vegetable oil. Call physician immediately.
Eyes: Flush with water for 15 minutes and get prompt medical attention.
Batteries produce explosive gases. Keep sparks, flame, cigarettes, etc. away. Ventilate when charging or using in an enclosed space. Always shield eyes when working near batteries. **KEEP CHILDREN AWAY FROM BATTERY.**

CAUTION

Whenever removing the battery, disconnect the negative (black) cable first. When reinstalling the battery, connect the negative (black) cable last.
Do not remove the battery cables while the engine is running. Doing so may damage the Electronic Control Unit (ECM).
Take great care not to reverse the battery leads when installing the battery. Reverse power applied to the ECM will damage it instantly.

BATTERY CHARGING

Refer to Battery Charging - General, page 16.7.

BATTERY STORAGE

When the motorcycle is not used for periods of one month or longer, charge the battery using the charging plug harness or remove battery from motorcycle and charge it. Store battery in a cool, dry place.

⚠ WARNING

Battery charging can create explosive gasses; keep sparks, flames, cigarettes or anything that could ignite the gasses away. Provide adequate ventilation when charging in an enclosed space. Batteries contain acid that is caustic. Wear protective clothing and a face shield or protective eyewear when working with the battery. KEEP OUT OF REACH OF CHILDREN.

BATTERY INSPECTION

Battery terminals and connections should be kept free of corrosion. If cleaning is necessary, remove the corrosion with a stiff wire brush. Wash with a solution of one tablespoon baking soda to one cup water. Rinse well with tap water and dry off with clean rags. Coat terminals with dielectric grease.

1. Visually inspect the exterior of the battery. Replace battery if case damage is evident or if the case is swollen, deformed or leaking electrolyte.
2. To remove corrosion, remove battery from motorcycle and wash terminals with water and baking soda solution. Clean terminals, bolts, and cable ends with a brass wire brush. Apply a thin film of dielectric grease to the terminal bolt threads.
3. Measure battery voltage.
   Specification: 12.5Vdc minimum
4. If battery voltage is below 12.5 VDC, charge it thoroughly (refer to Battery Charging - General, page 16.7). Replace battery if it will not accept a charge.

BATTERY REMOVAL

⚠ WARNING

Improperly connecting or disconnecting battery cables can result in an explosion and cause serious injury or death. When removing the battery, always disconnect the negative (black) cable first. When reinstalling the battery, always connect the negative (black) cable last.

1. Remove chin fairing (grill) (Chin Fairing (Outer And Rear), page 3.22).
2. Remove negative (-) battery cable (A) from battery terminal.
3. Lift the red protective boot (B) from the positive (+) cable end to expose the terminal. Remove the positive cable from the battery terminal.
4. Remove battery hold-down strap (C).

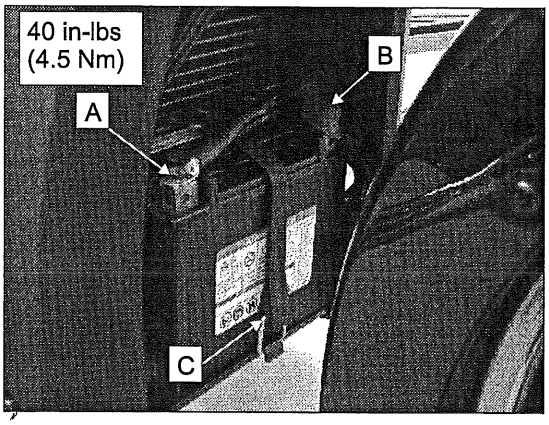

5. Remove battery.

BATTERY INSTALLATION

⚠ WARNING

Improperly connecting or disconnecting battery cables can result in an explosion and cause serious injury or death. When removing the battery, always disconnect the negative (black) cable first. When reinstalling the battery, always connect the negative (black) cable last.

CAUTION

On CB Radio equipped vehicles, be sure the CB antenna is installed and connected to the radio before connecting the battery.

1. Inspect battery tray for damage. Be sure tray fasteners (D) are tight, and foam pads (E) are in good condition and properly located.

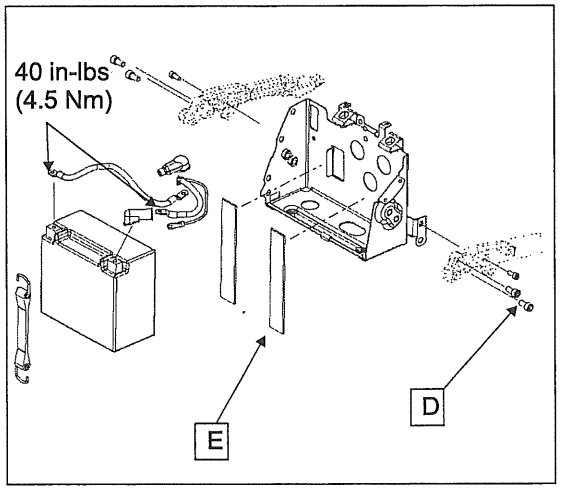

2. Install battery in battery box with terminals facing forward.
3. Install battery hold-down strap.
4. Apply dielectric grease to terminal bolt threads.
5. Install positive (+) cable first. Torque bolt to specification.
6. Install red protective boot over positive (+) terminal.
7. Install negative cable. Torque bolt to specification.
8. Install chin fairing (Chin Fairing (Outer And Rear), page 3.22).

ENGINE COMPRESSION TEST

1. Warm engine to operating temperature.
2. Shift transmission into neutral and stop engine.
3. Disconnect ignition cables from both spark plugs.
4. Remove spark plug from cylinder to be tested.
5. Remove 15A FUSE (FP / IGN COIL) from fuse box to disable fuel supply and ignition system (see Fuse Replacement (Main Fuse Box), page 2.38 for fuse box location).
6. Install compression tester in the spark plug hole following manufacturers instructions.
7. Open throttle and crank engine until needle on compression gauge stops rising (about 5 seconds).
8. Repeat procedure for other cylinder.

Engine Compression:
STD: 210-225 psi (1448-1551 kPa)

SERVICE LIMIT:
Below 180 PSI

High engine compression may indicate:

- Carbon deposits on piston crown / cylinder head
- Engine modification
- Addition of performance parts
- Faulty gauge

Low engine compression may indicate:

- Debris / carbon on valve face or valve seat.
- Worn piston and/or piston rings
- Piston ring stuck in the piston ring groove
- Leaking valves or head gasket
- Slow starter motor cranking speed
- Valve timing incorrect
- Faulty gauge

CYLINDER LEAKAGE TEST

If compression is low, perform a cylinder leakage test to determine where leakage is occurring. Follow instructions provided with test equipment.

Cylinder Leakdown Tester: PV-35667-A

ENGINE COMPRESSION TEST (WET)

If a leakage tester is not available, perform a wet cylinder compression test.

1. Pour 3-5 cc of clean engine oil into one spark plug hole. Repeat cylinder compression test. Repeat for the other cylinder.
2. If compression increases substantially, inspect cylinder, piston, and rings. If compression does not increase, inspect valves and valve seats.

DRIVE BELT WEAR ANALYSIS

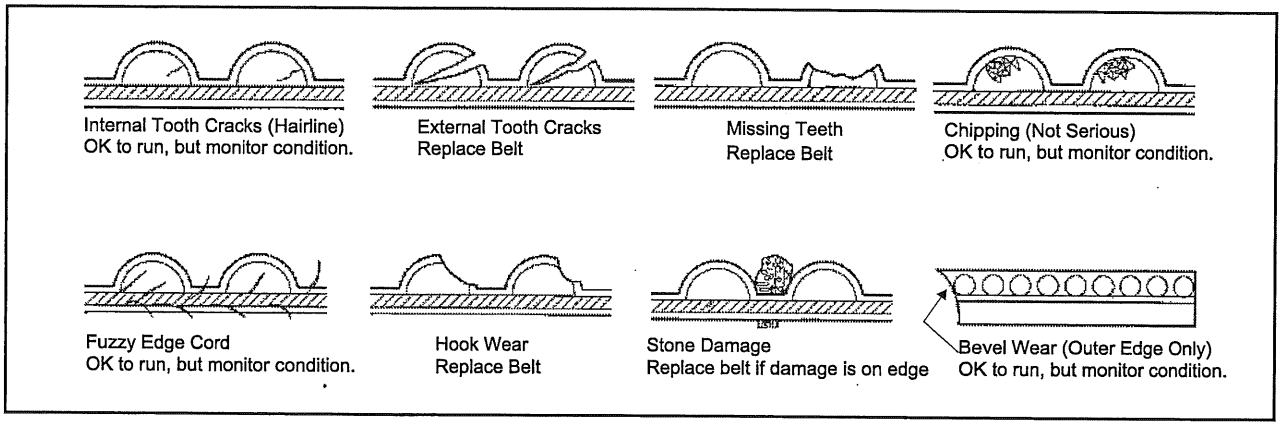

DRIVE BELT CONDITION

Replace the drive belt if it is cracked or has broken teeth or frayed edges. No matter its condition, the drive belt should be replaced in accordance with the Periodic Maintenance Interval Table, page 2.5 .

IMPORTANT

DO NOT attempt to check belt tension if the belt has been exposed to rain or washing within a 24 hour period or if the belt is hot from riding. Allow the belt to cool down to ambient temperature before measuring belt tension. Replace drive belt and both sprockets as a set if drive belt has over 5,000 miles (8,000 km) of service at the time of damage or failure.

DRIVE BELT TENSION GAUGE

Proper use of the belt tension gauge PV-43532 is important for accuracy. During the measurement procedure, be sure the gauge is seated squarely against the belt and in alignment with the belt centerline.

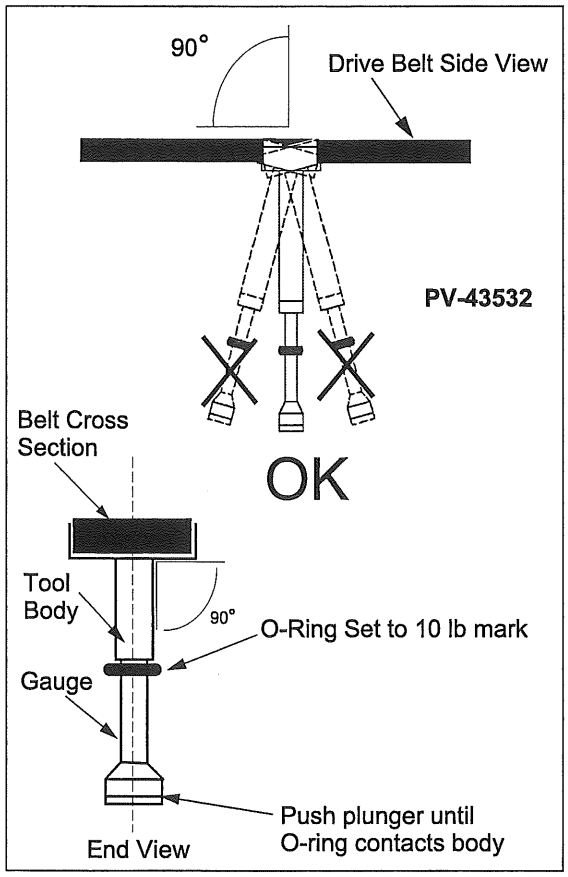

DRIVE BELT TENSION - INSPECTION

⚠ WARNING

Care should be taken to be sure the motorcycle will not tip or fall while elevated. Severe personal injury or death may occur if the motorcycle tips or falls.

1. Secure motorcycle in an upright position.
2. Shift transmission into NEUTRAL.
3. ELEVATE rear wheel off the ground when checking deflection or adjusting the belt.
4. Do not attempt to check belt tension if the belt has been exposed to rain or washing within a 24 hour period or if the drive system is hot from riding. Allow the system to cool to room temperature (60-80 F / 15-27 C) before measuring belt tension. Replace drive belt and both sprockets as a set if the drive system has over 5,000 miles (8,000 km) of service at the time of damage or failure.
5. See Drive Bet Tension Gauge, page 2.25 for instructions for proper use of belt tension gauge PV-43532.
   Finding The Tight Spot In The Drive System
6. Use tire valve stem as a reference. Rotate wheel in a CLOCKWISE rotation as viewed from belt side of motorcycle until valve stem is at the bottom. (Fig. 1)

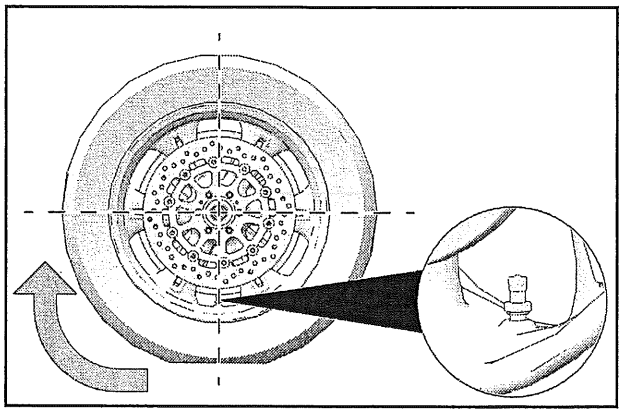

Fig. 1

7. Slide O-ring on belt tension gauge to the 10 lb. mark.
8. Place tape measure or ruler next to drive belt at mid-span (Fig. 2) and align a major graduation mark on the ruler with the lower edge of the belt surface. (Fig. 3) Do not move the ruler from this position.

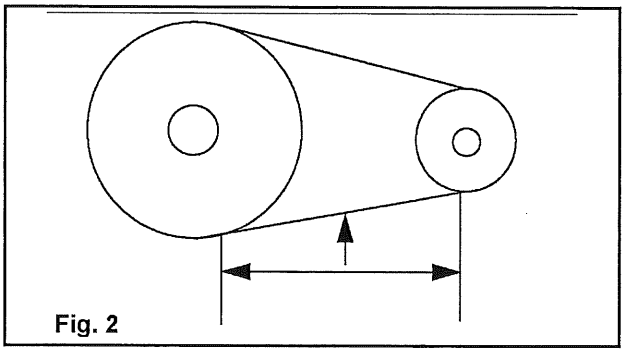

Fig. 2

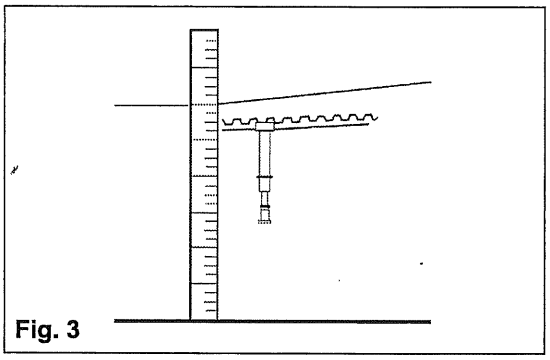

Fig. 3

9. Place belt tension gauge squarely against belt at until push up on center plunger until O-ring just touches tool body. Record the total amount of deflection as measured on the ruler.
10. Rotate wheel 90 degrees (valve stem is at rearmost position). Measure and record the deflection.
11. Repeat measurements with the valve stem at the top and forward positions and record the deflection.
12. Compare all measurements and use the point of least deflection (tightest spot) as your reference point to determine if belt requires adjustment.
13. Rotate the wheel in normal drive direction (CLOCKWISE) 1-2 revolutions back to your reference (tightest) point.

14. If belt deflection is greater than specified, tighten the belt. If deflection is less than specified, loosen the belt. Refer to specification table in Drive Belt Adjustment / Alignment, page 2.28.

Specifications: Drive Belt

Model	Belt Deflection @ 10 lbs force
ALL MODELS	32.0 mm ± .5 mm (1 1/4" ± 1/32")
The following data is provided for use with the Gates 507C Sonic Tension Meter or an equivalent. Follow Steps 1-4 and the instructions included with your sonic tension meter.	
Required Data For Sonic Tension Meter	**Specification**
Span	708.65 mm
Belt Width	28 mm
Belt Mass Constant	8.4
Tension	20 Hz (± 1 Hz)

SPROCKET INSPECTION

1. Inspect front and rear sprocket teeth (Rear Sprocket Inspection, page 11.10) for wear or damage from foreign material. Closely inspect drive belt condition at the same time.

DRIVE BELT CLEANING

Drive belt and sprocket service life is maximized and drive line noise minimized by proper cleaning. Cleaning interval is approximately every tire change, or more often if operated in dirty, dusty, or high debris environments.

1. Mix a few drops of mild dish soap with a cup of warm water a use a soft nylon brush to clean the belt and sprocket teeth.
2. Pay close attention to corner areas ① where road debris and belt dust can collect.

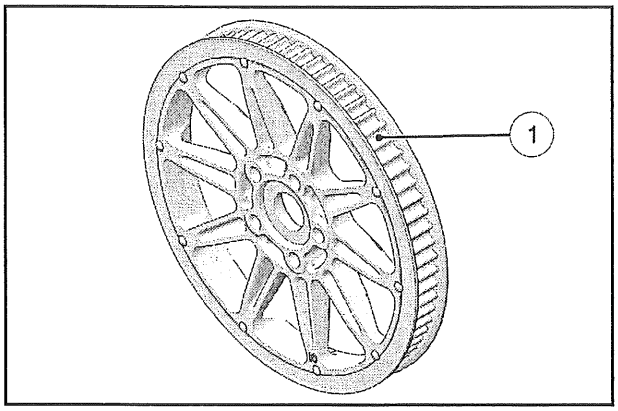

3. Rinse thoroughly with clear water. Dry thoroughly.

NOTE

Do not inspect or adjust drive belt tension when the belt is wet. Improper adjustment will result.

DRIVE BELT ADJUSTMENT / ALIGNMENT

Rear Wheel Alignment / Belt Adjustment

⚠ WARNING

A mis-aligned rear axle can cause drive line noise and damage the drive belt, causing possible belt failure and loss of control of the motorcycle.

1. Remove both saddlebags (Saddlebag, Removal / Installation (Unbolted), page 3.28).
2. Swingarm marks ① and plate marks ② are used as a reference for initial wheel alignment. Marks should be in same position on both left and right sides of wheel.
3. Loosen axle nut ③.

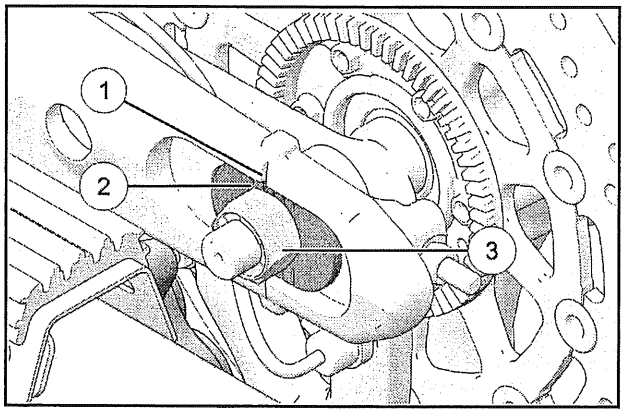

NOTE

Marks are for initial alignment only. Refer to procedure for final alignment.

4. Safely elevate rear tire off floor.
5. Turn adjuster nuts ④ on left and right side of swingarm to achieve:

- Recommended belt tension
- Wheel alignment (marks equal both sides)

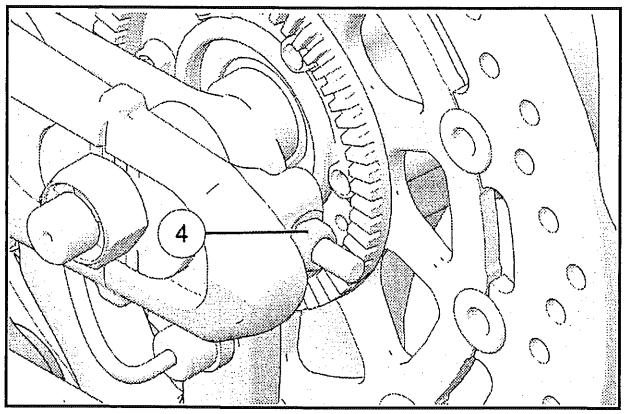

6. When *belt tension* is correct, check and adjust final *wheel alignment* as follows:

NOTE

To minimize change in belt tension, use LEFT SIDE adjuster only ④ to make final adjustments to belt alignment. *Be sure to keep axle seated forward against axle adjusters during this procedure.*

7. Rotate the wheel BACKWARD. Tighten LEFT rear axle adjuster until belt *begins* to track to right sprocket flange (outboard) during backward wheel rotation.

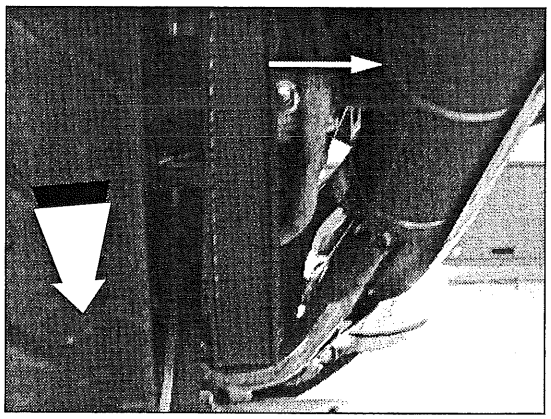

Rear Wheel Alignment - Final

8. Rotate the wheel in FORWARD direction. Loosen LEFT rear axle adjuster until belt moves off the right sprocket flange and begins to track to the left flange (inboard) during forward wheel rotation.

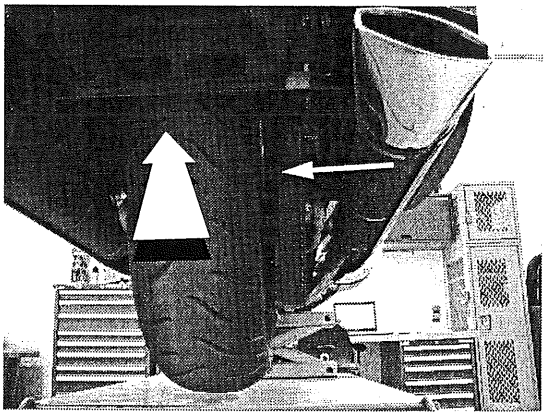

9. Tighten rear axle nut to specification.

TORQUE
Rear Axle Nut: **65 ft-lb (88 Nm)**

10. Torque both axle adjuster nuts to specification.

TORQUE
Axle Adjuster Nuts: **8 ft-lb (11 Nm)**

11. Pump rear brake pedal several times to reset brake pad distance.
12. Verify wheel rotates smoothly and freely without drag when brake pedal is released.

HEADLAMP AIM INSPECTION

NOTE

Conventional headlights and LED headlights utilize different reflectors and must have the aim set using different methods. The following procedure outlines how to inspect headlight beam projection for both headlight types:

Adjust headlight aim when there is a change in load (rider, cargo, accessories, etc.) or after suspension adjustment.

Cross Country / Cross Country Tour / 8– Ball / Cross Roads: With the headlight switched to HIGH beam, the center of highest intensity (appears as a diamond shape) should be 7.5 in (19 cm) below the height of the headlight bulb when centered straight ahead at 25 feet (7.62 m).

Magnum / Magnum X-1: With the headlight switched to LOW beam, the top of the highest intensity (appears as a diamond shape) should be 3.0 in (7.6 cm) below the height of the headlight bulb when centered straight ahead at 25 feet (7.62 m).

Follow all steps below to ensure accurate aim inspection.

1. Check and adjust the tire pressure.
2. Verify suspension ride height is set correctly.
3. Move the motorcycle to a clear area with a level floor and dim lighting, and place it so the top front edge of the headlight housing is 25 ft. (7.6 m) from the wall.
4. Have the rider (and passenger if normally present) straddle the motorcycle in an upright position and sit in the seat (s). Center the handlebars in a straight ahead position.
5. Turn ignition switch ON.
6. Set headlight to HIGH beam for CROSS COUNTRY / CROSS COUNTRY TOUR / 8– BALL / CROSS ROADS models and LOW beam for MAGNUM / MAGNUM X-1 models.
7. Compare the position of headlight beam on the wall to the illustration below and adjust if necessary.

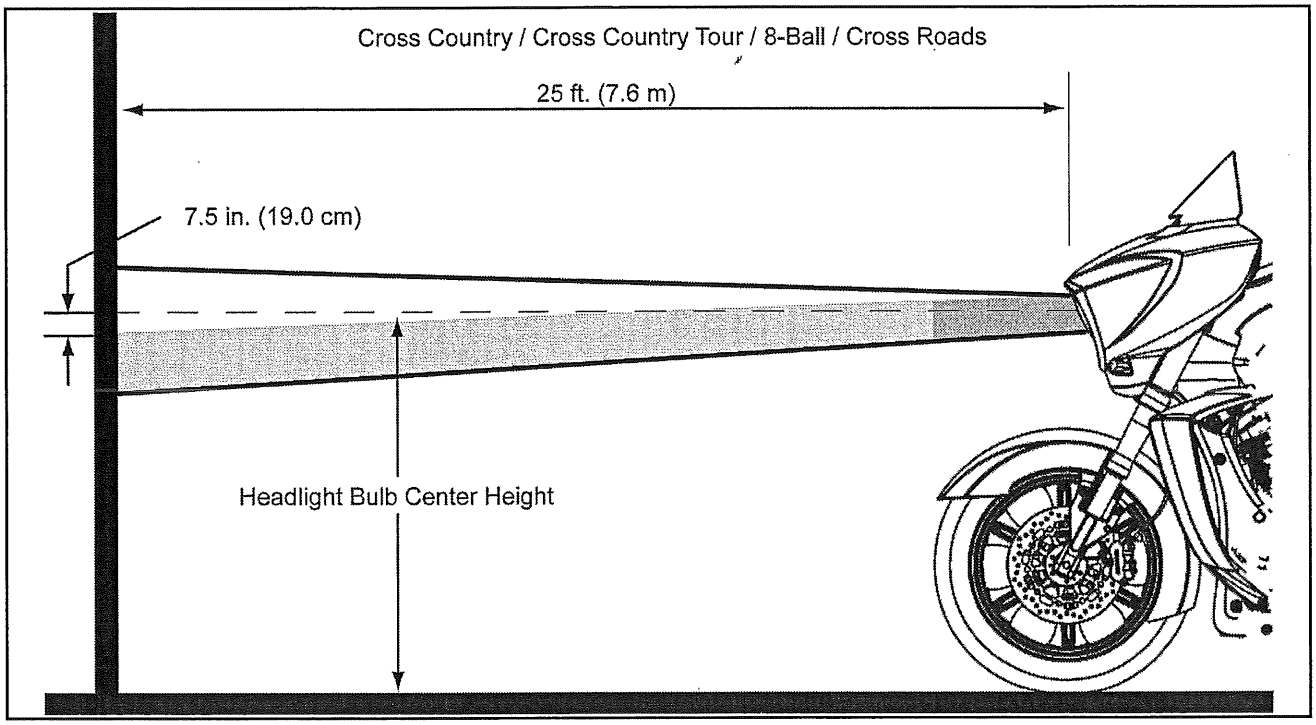

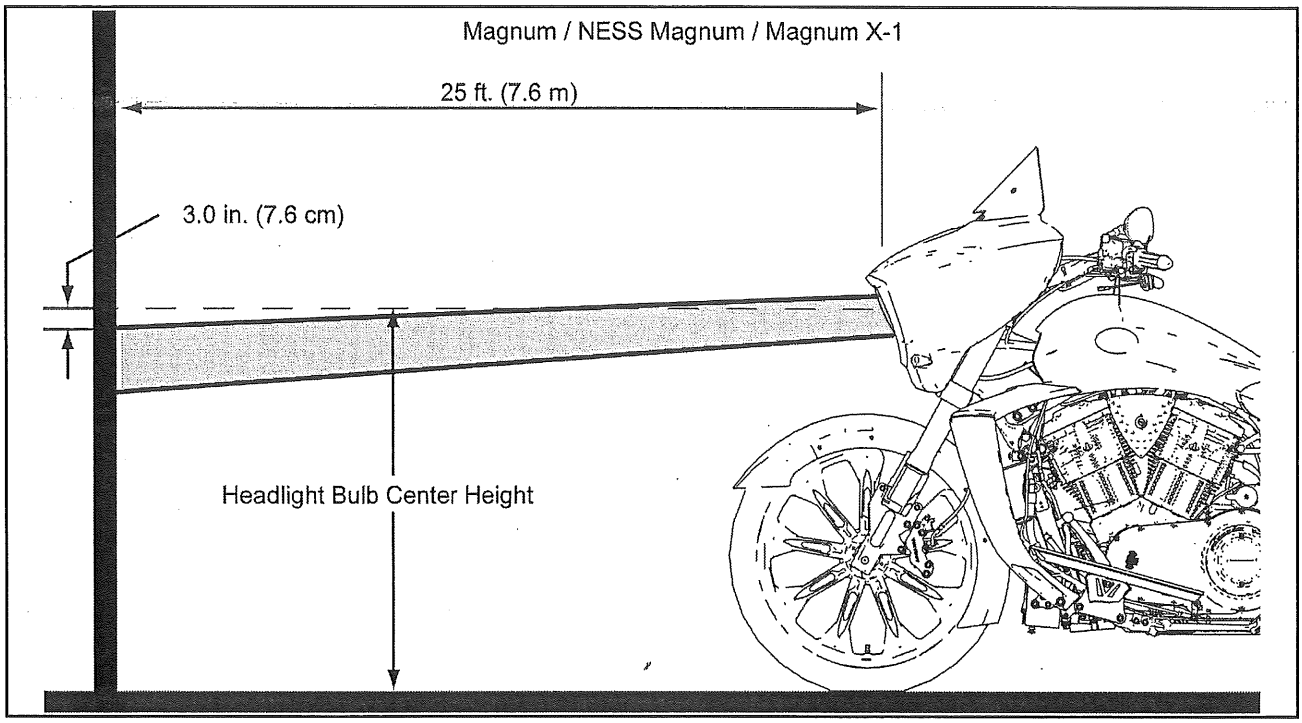

HEADLAMP AIM ADJUSTMENT

Cross Country / Cross Country Tour / 8-Ball / Cross Roads

- Remove headlamp bezel by pulling straight outward to release the clips.
- Vertical Adjustment: Loosen the adjustment screws (B) equally to lower the beam. Tighten the screws equally to raise the beam.
- Horizontal Adjustment: Tighten one screw and loosen the other equally. The beam will move in the direction of the tightened screw.
- Verify proper aim and install headlamp bezel.

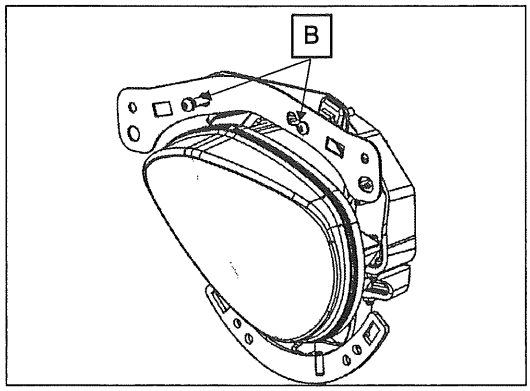

Magnum / Magnum X-1

- To adjust the headlamp vertically, remove the headlight bezel by pulling straight outward at the edges to release the spring clips. Loosen the adjustment screws evenly to adjust the beam downward. Tighten the adjustment screws evenly to adjust the beam upward.
- To adjust the headlamp horizontally, tighten one screw and loosen the other equally. The beam will adjust to the direction of the tighter screw.
- Verify proper headlight aim. Readjust if necessary.

SIDE-STAND INSPECTION

1. Support the motorcycle in an upright position with the front wheel clamped in a wheel vise.
2. Inspect side-stand spring for damage or loss of tension. Verify the side-stand returns to fully retracted position.

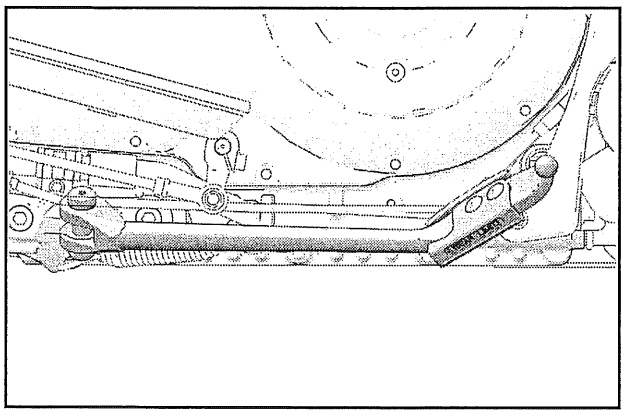

3. Inspect side-stand for smooth movement.
4. Inspect side-stand pivot fastener nut for proper torque.

TORQUE
Side-stand Pivot Fastener: **35 ft-lbs (48 Nm)**

5. Replace side-stand if it is bent. Do not attempt to straighten side-stand.
6. Inspect side-stand pad for wear.

SIDESTAND PAD INSPECTION

Sidestand Pad Inspection

1. Inspect the sidestand rubber pad ① for wear. Be sure pad is secured in place and not damaged or torn. Replace pad if worn to or beyond the wear mark ②. See Sidestand Pad Replacement (Typical), page 2.33 for replacement procedure.

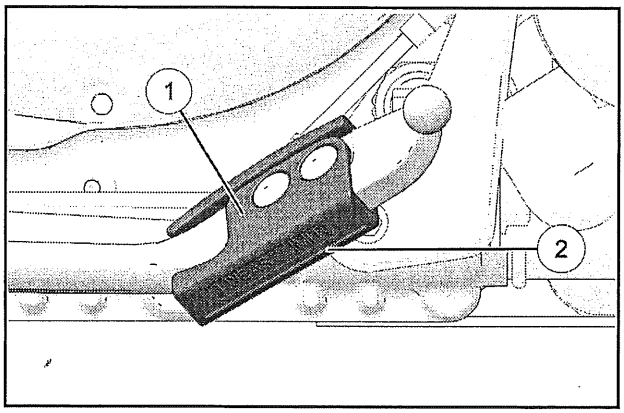

SIDESTAND & SPRING REMOVAL

⚠ WARNING

The sidestand spring is under tension. Wear eye and face protection when removing and installing the spring and sidestand. Be sure the vehicle is properly secured before you begin.

1. Sidestand will be moved between the UP (retracted) and DOWN (extended) position during removal and installation. Be sure vehicle is properly secured.
2. Remove sidestand pivot nut using a 15mm socket while holding bolt with a 6mm hex wrench.
3. Place sidestand in the *DOWN* position, then remove the bolt.
4. Grasp sidestand firmly and move it to the UP position.
5. Pull sidestand straight rearward against spring tension until mounting flange on sidestand is clear of the recessed mounting boss on the frame cradle.
6. Remove spring.
7. *Installation:* Attach spring to sidestand.
8. Lightly grease sidestand mounting boss on frame rail and the shouldered portion of the pivot bolt.
9. Place loose end of spring through hole in frame rail.

10. With sidestand in the retracted position (up), pull stand straight rearward against spring tension until the mounting flange on the sidestand drops into the recessed mounting boss on the frame cradle.
11. Swing sidestand to the extended position to align bolt hole and install bolt and nut.
12. Torque nut to specification and wipe off any excess grease. Cycle the sidestand to be sure it moves freely, and returns to the fully retracted position.

TORQUE
Sidestand Nut: **35 ft-lb (48 Nm)**

13. Cycle the sidestand to be sure it moves freely, and returns to the fully retracted position.

SIDESTAND PAD REPLACEMENT (TYPICAL)

Sidestand Pad Removal

1. Remove side stand from frame.

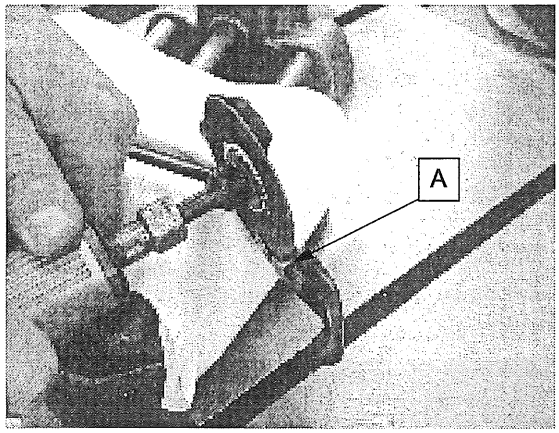

2. Place sidestand in a soft-jawed vise.
3. Remove rubber pad with a pliers to expose the rivets.
4. Using an angle grinder, cut off the head of both rivets on the top side of the sidestand foot (A). Be careful to avoid grinding wheel contact with the finished area of the stand.
5. Drive rivets out of sidestand foot *from top to bottom* with a suitable drift punch (B).

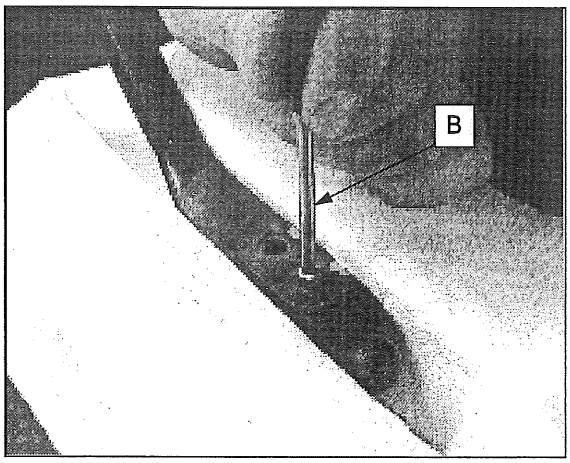

Sidestand Pad Installation

6. Install new sidestand pad with open end on trailing edge of stand.

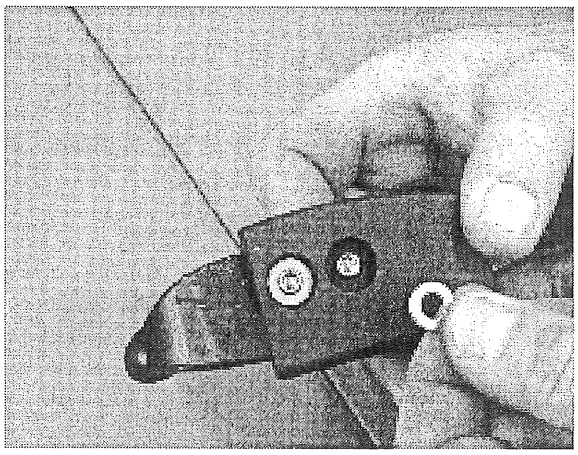

7. Install new rivets from top to bottom.
8. Invert sidestand and place washers over rivets.
9. Hold washers and rivets in place and set sidestand on a hard surface (such as the anvil of a vise) with hollow end of rivets facing upward. Push washers as far down as possible. Be sure washers are at least 1/16 - 1/8 inch (1.5-3mm) below hollow end of rivets.

10. Peen hollow end of rivets with a commercially available rivet tool. Be sure rivets, washers and pad are secure.

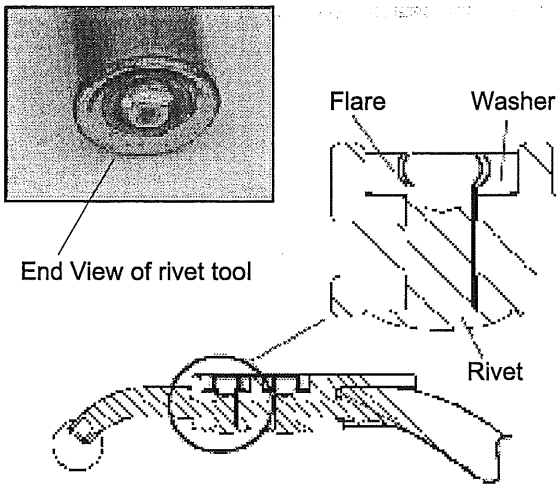

NOTE

An alternative method is to use a center punch to start a flare on hollow end of rivet, then use a 1/4 inch drift (flat) punch to complete the peening operation.

11. Apply touch up paint or primer to exposed bare metal.

REAR SUSPENSION / SWINGARM INSPECTION

⚠ WARNING

Care should be taken to be sure the motorcycle will not tip or fall while elevated. Severe personal injury or death may occur if the motorcycle tips or falls.

1. Sit astride the motorcycle. Compress the rear suspension several times and check for smooth and quiet operation.
2. Secure motorcycle with rear wheel elevated.
3. Grasp the rear most surface of the rear tire and attempt to move the wheel side-to-side. If there is movement at the front of the swingarm (A), check swingarm pivot nut is torque and swingarm bearings. See Swing Arm Installation, page 13.28).

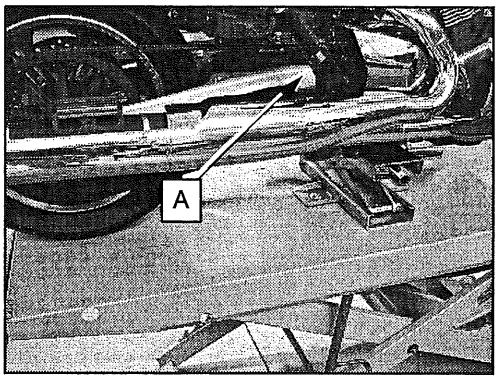

TORQUE
Swingarm Pivot Nut: **65 ft-lb (88 Nm)**

4. Rotate rear wheel. Check for smooth rotation of wheel bearings. Grasp wheel at top and bottom and attempt to move wheel side-to-side. If movement is detected in axle area (B) inspect axle nut torque and rear wheel bearings (Rear Wheel Installation, page 13.16). If abnormal noise is detected, inspect belt tension / alignment (Drive Belt Tension - Inspection, page 2.26 - Drive Belt Adjustment / Alignment, page 2.28) and brake pads (Rear Brake Pad Inspection, page 2.18).

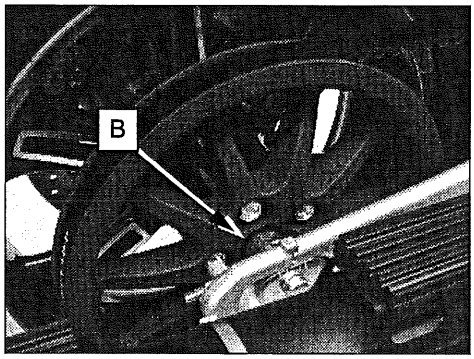

TORQUE
Rear Axle Nut: **65 ft-lb (88 Nm)**

5. Inspect rear shock for signs of oil leakage (Rear Shock And Rocker Inspection, page 13.22).

6. Lift rear wheel up and down slightly with a pry bar while watching lower shock mount and lower strut mount on swingarm (C) for movement. Check fastener torque or replace spherical bearings if worn.
7. If radial movement is evident in upper rocker joints refer to Rear Shock Removal, page 13.20 to remove shock and strut assembly for further inspection.

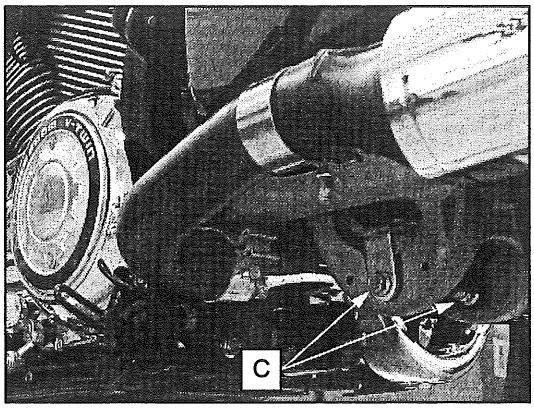

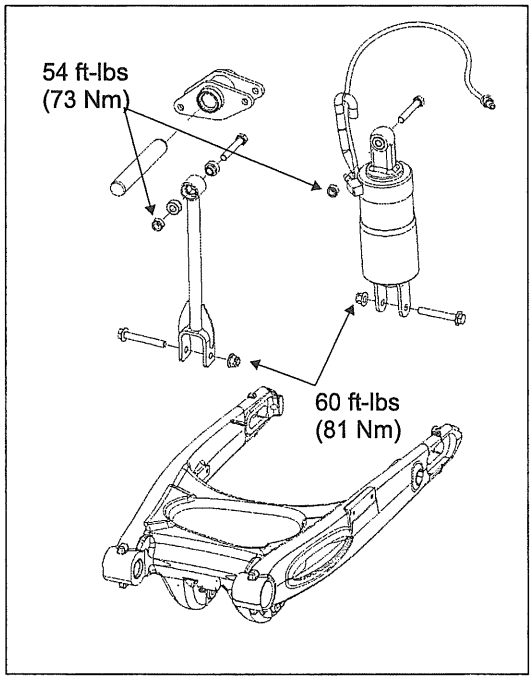

REAR SUSPENSION AIR PRESSURE ADJUSTMENT

To provide the most comfortable ride and proper ground clearance, adjust air pressure in the rear shock absorber as specified on the decal for total cargo and occupant weight.

Follow these guidelines to check and adjust air pressure:

- Rest bike firmly on sidestand on level ground.
- Remove all cargo from the saddlebags.
- Victory Air Pump & Gauge 2876654 or PV-48909 is the preferred tool for checking and adjusting rear suspension air pressure. If not available, use a pressurized dry air source with a maximum line pressure of 110 PSI and the pressure gauge provided in the tool kit (or a similar 0-100 PSI tire pressure gauge).
- Use ONLY A DRY AIR SOURCE, such as a system with a water separator or air line dryer to prevent moisture from entering the shock. The shock has a small volume. Air pressure increases VERY quickly when using pressurized air.

NOTE

The shock has a small air volume. Each time pressure is checked with a tire pressure style gauge, approximately 4 PSI (27.5 kPa) is lost to fill the volume of the gauge. Once you've set the pressure with the gauge, remove it quickly to minimize leakage, and expect to see a reduction from the previous reading of about 4 PSI if you re-check the pressure.

1. Remove right side cover.
2. Remove cap from air fitting (A).

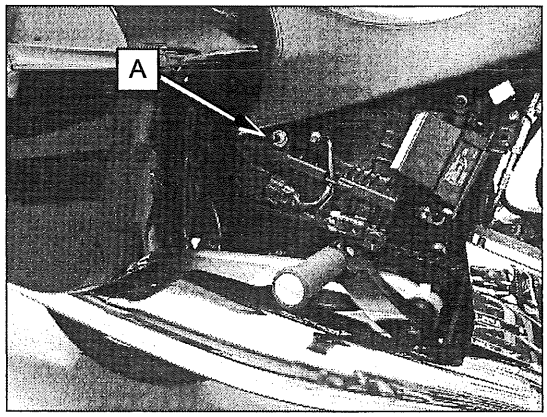

3. Open the right saddlebag and locate pressure decal.

4. Read recommended air pressure for total cargo and occupant weight from decal.

AIR SUSPENSION ADJUSTMENT				
Set desired pressure with bike unloaded on side stand			7180408	
Total Cargo & Occupant Weight (lbs)	Air Pressure (psi)-MAX 72 PSI			
	No Trunk	Trunk	ABS-Tour	Low
100	0	0	0	26
125	0	0	0	30
150	0	0	9	35
175	0	9	15	38
200	0	15	25	42
225	9	25	29	46
250	15	29	34	49
275	25	34	39	52
300	29	39	45	57
325	34	45	52	63
350	39	52	58	65
375	45	58	65	68
400	52	65	70	72
425	58	70	72	
450	65	72	72	
475	70	72	72	
500	72	72	72	

5. Screw hose fitting of gauge PN 2876654 securely onto air fitting and read air pressure on gauge.

6. To REDUCE air pressure, push bleed button (B) on gauge. Bleed pressure in small amounts to desired pressure. Remove tool hose from fitting and install cap.

7. To INCREASE pressure, install gauge on fitting. Pump handle (C) until pressure increases to desired amount. Remove hose and install cap.

   DO NOT exceed 110 PSI (758 kPa) when using pressurized air to fill the shock.

   DO NOT operate motorcycle with air pressure above 72 PSI (496 kPa) (pressure measured with motorcycle unloaded on side stand).

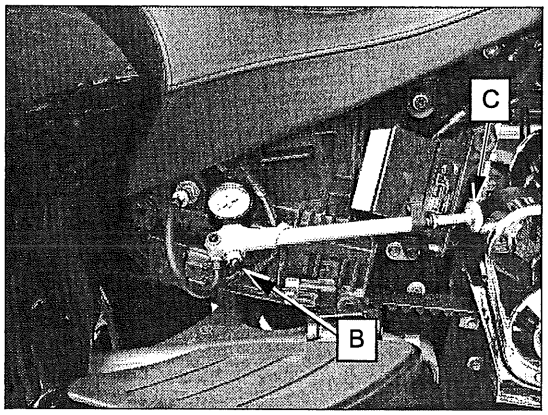

FRONT FORK / SUSPENSION INSPECTION

⚠ WARNING

Damaged, worn, or loose suspension components may cause loss of control, increasing the chance of a crash or possible injury. Damaged, worn, or loose suspension components must be repaired before the motorcycle is operated. See Important Information, page 12.3.

⚠ WARNING

Care should be taken to be sure the motorcycle will not tip or fall while elevated. Severe personal injury or death may occur if the motorcycle tips or falls.

1. Place motorcycle on sidestand and inspect inner fork tube area (A) and brake discs for signs of oil leakage. Replace seals if leaking (Front Fork Disassembly, page 12.31).

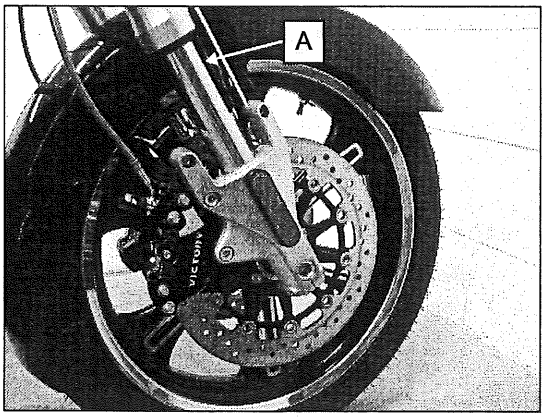

2. Clean fork tubes with mild soap and water as required to remove bugs, tar, or buildup which may cause seal wear or leakage.
3. Inspect outer surfaces of inner fork tubes for scoring, scratches, and damage from foreign objects.
4. With motorcycle upright, apply front brake and pump forks through travel range several times. Fork operation should be smooth without abnormal noise.
5. Verify all fasteners are tight. Refer to Front Wheel/ Suspension Chapter for front wheel and suspension torque specifications, and Brake System Torque Specifications, page 15.5 for brake system torque specifications.
6. Secure motorcycle with front wheel elevated.
7. Turn handlebars from full left to full right and inspect for smooth, free movement.

NOTE

Be sure hoses, cables, and wiring are not interfering with handlebar rotation.

8. Point front wheel straight ahead, grasp fork tubes and pull/push fork tubes front to back (B).

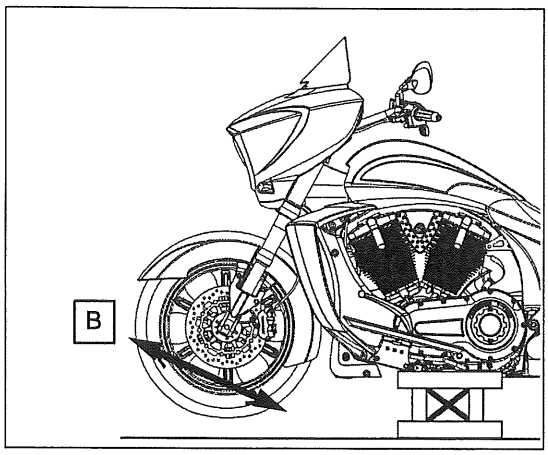

9. If steering binds, feels rough or uneven, or if movement is detected at steering stem, adjust or replace steering head bearings as necessary. Refer to Front Wheel/Suspension Chapter.
10. Rotate front wheel and inspect for smooth rotation of front wheel bearings. If bearings are rough or noisy, replace front wheel bearings (Front Wheel/ Suspension Chapter).
11. Turn handle bars against a fork stop. Attempt to move wheel side-to-side (C). If movement is observed, inspect front axle, wheel, and bearings (Front Wheel/Suspension Chapter).

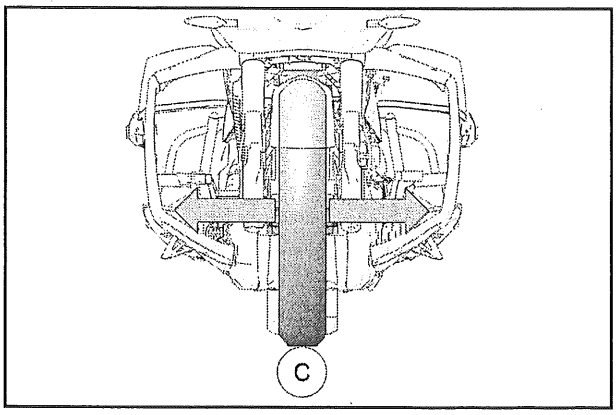

FUSE REPLACEMENT (MAIN FUSE BOX)

1. Remove right side cover (Side Cover Removal, page 3.27).
2. Pull latch (A) on each side of fuse box cover to release.
3. To remove fuse box from mount, lift tab (B) and slide box in direction shown on decal.
4. Accessory power fuse is located in holder (C).

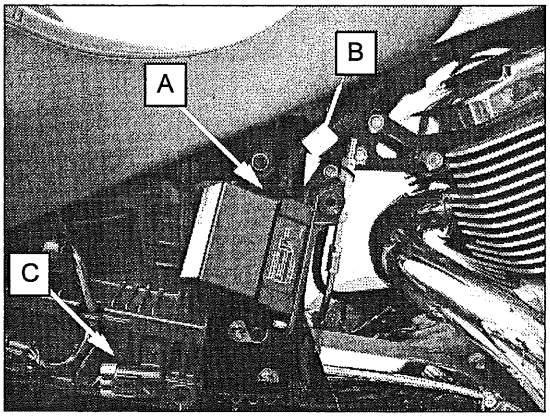

CAUTION

Use only the recommended fuse to prevent electrical system damage.

Main Fuse Box Layout: Magnum, Cross Country & Tour.

CHASSIS RELAY	ENGINE RELAY	FUEL PUMP / IGNITON COIL RELAY	PRIMARY LIGHTING RELAY
PRI LIGHTING 20A	ENGINE 15A	FP/IGN COIL 15A	TURN SIGNAL / HORN RELAY
IGNITION 10A	CHASSIS 20A	TS / HORN 10A	

FUSE REPLACEMENT (REMOTE FUSES)

NOTE

Some Victory Magnum, Cross Country and Cross Country Tour Motorcycles may be equipped with remote fuses which provide power to Reverse System, ABS System, Radio and Accessory socket.

- Reverse system fuse is located beneath the left hand seat skirt. See Reverse Module / Fuse Access, page 19.32 for details.

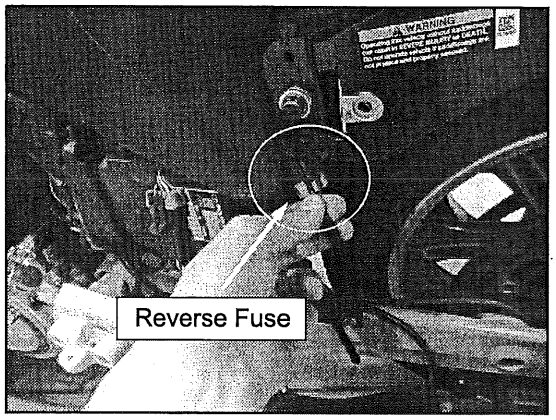

- ABS system fuses (2) are located below the rear fender.

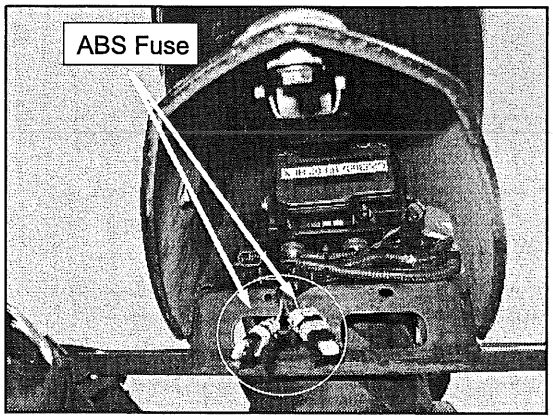

- Radio fuse is located behind the headlamp assembly (Cross Country), plugged into the radio module.

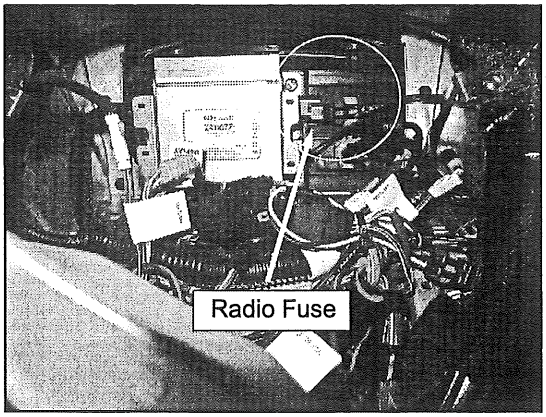

- Accessory fuse (lower fairing) is located beneath trim panel covering battery.

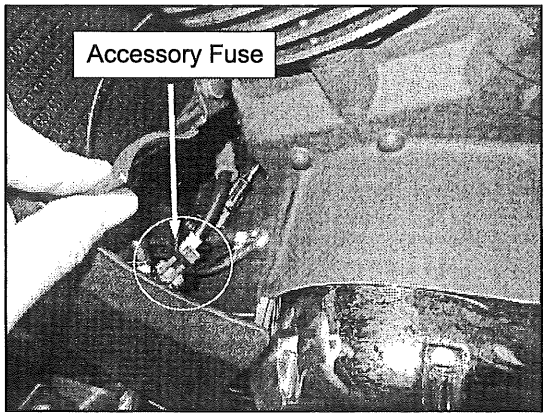

FASTENERS

Inspect all fasteners on the vehicle to be sure they are tight. Refer to the appropriate chapter as required for torque specifications.

LOCK AND IGNITION SWITCH LUBRICATION

1. Insert spray nozzle of Victory Multi-Purpose Lubricant into the ignition switch and each lock cylinder and spray for 1-2 seconds.
2. Insert key and turn it to all positions to distribute the lubricant.
3. Wipe any excess lubricant from lock or switch.

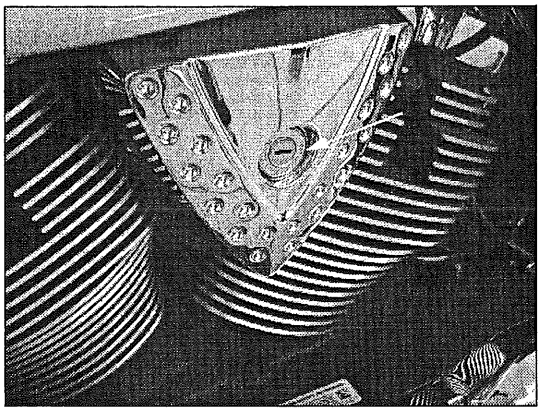

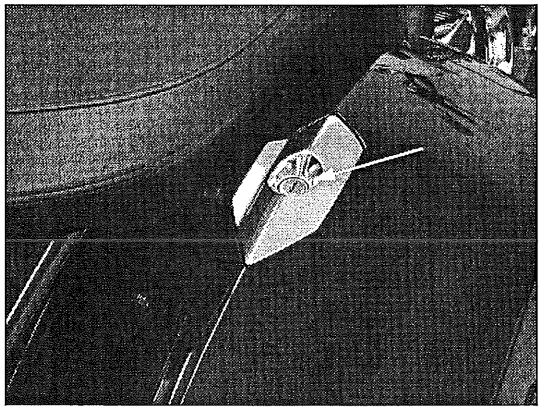

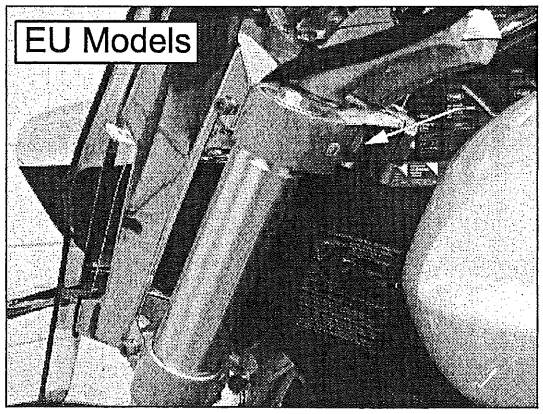

CLEANING

NOTE

Refer to Lubricants / Chemicals for maintenance product part numbers, and the Owner's Manual for more information. Pure Victory cleaning and polishing products and accessories have been specifically designed to offer the best care possible for a Victory motorcycle. In addition to the products recommended here, Pure Victory products are also available for removing scratches, scuffs, and swirls in paint or clear coat, cleaning or enhancing black or silver engines, cleaning tires and wheels, and removing brake dust. Visit www.purevictorypolishes.com for all cleaning product needs.

Before washing the motorcycle, do the following:

- Be sure exhaust has cooled completely. Cover exhaust openings with a plastic bag secured with a strong rubber band to prevent water from entering exhaust system.
- Check spark plugs, spark plug wires, oil dipstick, fuel cap, and other fill caps are properly seated.
- Avoid spraying the air box / air filter area or electrical connectors and wiring.
- Remove excess dirt with low pressure water. Use as little water as possible near air intake or exhaust openings. Dry thoroughly before starting the engine or operating the motorcycle.
- Make sure brakes are functioning properly before operating the motorcycle.
- Do not use abrasive cleaners. Paint wear or other cosmetic damage can occur if abrasives are used.

CAUTION

Electrical components may be damaged by water. Do not allow water to contact electrical components or connectors.

CAUTION

Do not use pressurized water to wash the motorcycle. Water may seep in and deteriorate wheel bearings and seals, brake caliper assemblies, brake master cylinders, electrical connectors, steering head bearings, and transmission seals if excessive pressure is used.

CAUTION

Do not use glass cleaners, water or soil repellents, and petroleum or alcohol based cleaners on the windshield (if equipped), as these products can damage the windshield.

WINDSHIELD CARE

Rinse windshield with water to remove loose dirt and dust. Wash the windshield using one of the Pure Victory wash products described in Cleaning, page 2.40 (follow directions on the container for the product you choose) then rinse (if recommended in the directions) and wipe with a Pure Victory Microfiber Chamois or Plush Microfiber Towel to dry virtually spot free.

CAUTION

Do not use glass water and soil repellents, petroleum or alcohol based cleaners as these products can damage the windshield.

CAUTION

Windshield material is polycarbonate plastic. Do not use cleaners or rain protective products meant for glass surfaces on the windshield.

STORAGE

To prevent storage damage due to long-term storage (60 days or more) the following guidelines should be followed.

1. Top off fuel tank with fresh fuel and add fuel stabilizer to fuel.
2. Run motorcycle for 15 minutes or more to distribute fuel stabilizer throughout fuel system.
3. Clean motorcycle completely.
4. Dry machine thoroughly and wax all painted surfaces.
5. Change engine oil as outlined in Engine Oil And Filter Change, page 2.10.
6. Lift and support the motorcycle securely to take some of the weight off of front and rear wheels.
7. Secure a plastic bag over the exhaust outlets to prevent moisture from entering the exhaust system.

NOTE

Make certain exhaust system is cool prior to securing plastic.

8. Remove battery and charge it.
9. Store battery in a cool, dry area and charge it once a month.
10. Cover motorcycle with a genuine Victory cover, or a covering made of fabric that allows for adequate ventilation. Do not use plastic or tarps, as corrosion may result.

NOTE

Starting the motorcycle periodically during storage is not recommended. Water vapor is a by-product of the combustion process, and corrosion may result unless the engine is operated long enough to bring the oil and exhaust system to normal operating temperature.

SUEDE FINISH CARE

Suede paint is different from Victory's usual high gloss finish. Like suede fabric, suede paint changes as you interact with the finish. It will change with time, exposure to elements, and use. Although the quality of the paint is not affected by these changes, special care is required when cleaning a suede finish.

Suede paint cannot be buffed out if it becomes scratched or scuffed. If polished, the finish will become less flat or matte. This finish cannot be repaired if it receives heavy damage like a scratch or a chip.

Suede Finish Cleaning Instructions

1. Spray Pure Victory Polish Suede Finish Cleaner (#90949) directly on all suede bodywork.
2. Using a Pure Victory Polish 100% Microfiber Polishing Towel (#90962), wipe cleaner into the surface, then wipe dry using a clean, dry surface of the towel.
3. After suede bodywork is clean and dry, apply Pure Victory Polish Suede Finish Protectant to maintain and protect the beauty of your Victory Motorcycle.

   Suede Finish Protectant Instructions

4. Spray Pure Victory Polish Suede Finish Protectant (#90950) onto clean suede bodywork and use Polishing Towel (#90962) or Microfiber Applicator (#90965) to rub protectant thoroughly into the surface.
5. Using a clean, dry microfiber towel, wipe surface to achieve that showroom-new Suede Finish.

NOTE

Be sure to apply Pure Victory Polish Suede Finish Protectant after every cleaning.

NOTES

CHAPTER 3
FRAME / BODY / EXHAUST

SAFETY 3.3
GENERAL PRECAUTIONS 3.3
GENERAL INFORMATION 3.4
SPECIAL TOOLS 3.4
HOW TO USE THIS CHAPTER 3.4
REMOVAL / INSTALLATION PROCEDURES - FRONT BODY 3.5
FRONT FENDER 3.5
IGNITION SWITCH / IAC COVER 3.6
IGNITION SWITCH / IAC COVER (CAST) 3.6
MIRRORS 3.7
WINDSHIELD (CROSS COUNTRY) 3.8
WINDSHIELD (CROSS COUNTRY TOUR) 3.9
WINDSHIELD (MAGNUM / X-1) 3.10
HEADLAMP BEZEL 3.11
HEADLAMP, HALOGEN 3.11
HEADLAMP, LED 3.12
HEADLAMP, HID 3.12
HEADLAMP ASSEMBLY VIEW, HALOGEN 3.13
HEADLAMP ASSEMBLY VIEW, HID 3.13
HEADLAMP ASSEMBLY VIEW, LED 3.14
HID BALLAST SERVICE 3.15
AUXILIARY DRIVING LIGHTS (CROSS ROADS) 3.15
SPEAKER GRILL 3.15
FRONT FAIRING - UPPER (CROSS COUNTRY) 3.16
DASH PANEL 3.17
FAIRING MOUNT ASSEMBLY VIEW (CROSS COUNTRY) 3.18
FAIRING MOUNT REMOVAL 3.19
FAIRING ASSEMBLY (MAGNUM) 3.20
INSTRUMENT CLUSTER 3.21
TURN SIGNAL 3.22
VISOR 3.22
CHIN FAIRING (INNER GRILL) 3.22
CHIN FAIRING (OUTER AND REAR) 3.22
HIGHWAY BARS 3.23
FRONT FAIRING - LOWER - (CROSS COUNTRY TOUR) 3.24
INSTRUMENT BEZEL (CROSS COUNTRY) 3.26
REAR BODY 3.27
SIDE COVER REMOVAL 3.27
SEAT 3.27
SADDLEBAG, REMOVAL / INSTALLATION (UNBOLTED) 3.28
SADDLEBAG, REMOVAL / INSTALLATION (BOLTED) 3.28
SADDLEBAG SPEAKER, REMOVAL 3.29

SADDLEBAG SPEAKER, INSTALLATION....3.30
ANTENNA / ANTENNA MOUNT....3.31
SADDLEBAG ASSEMBLY VIEW (NON-AUDIO)....3.32
SADDLEBAG ASSEMBLY VIEW (MAGNUM X-1)....3.33
REAR FENDER / SADDLEBAG MOUNT....3.35
REAR FENDER (MAGNUM)....3.36
TRUNK....3.37
TRUNK ASSEMBLY VIEW / MOUNT....3.39
TAIL LIGHT / TURN SIGNAL ASSEMBLY VIEW....3.40
FLOORBOARD / FOOT CONTROL MOUNTING....3.41
PASSENGER FOOTREST MOUNTING....3.43
PASSENGER FLOORBOARDS (ADJUSTABLE)....3.44
EXHAUST SYSTEM....3.46
ASSEMBLY VIEW - EXHAUST COMPLETE....3.46
ASSEMBLY VIEW – MUFFLER....3.47
ASSEMBLY VIEW – HEAD PIPES....3.48

SAFETY

GENERAL PRECAUTIONS

This section covers the removal and installation of the frame body panels and exhaust system. Always replace exhaust system sealing gaskets when exhaust components are removed. Inspect the system for leaks after installation.

⚠ WARNING

Gasoline is extremely flammable and explosive under certain conditions.

Always stop the engine and refuel outdoors or in a well ventilated area.

Do not smoke or allow open flames or sparks in or near the area where refueling is performed or where gasoline is stored.

Do not overfill the tank. Do not fill the tank neck above the fuel tank insert. Leave air space to allow for fuel expansion.

If you get gasoline in your eyes or if you swallow gasoline, see your doctor immediately. Never try to syphon gasoline using mouth suction.

If you spill gasoline on your skin or clothing, immediately wash it off with soap and water and change clothing.

Never start the engine or let it run in an enclosed area. Gasoline powered engine exhaust fumes are poisonous and can cause loss of consciousness and death in a short time.

⚠ WARNING

The engine exhaust from this product contains chemicals known to cause cancer, birth defects or other reproductive harm.

⚠ WARNING

Improper repairs or service can create unsafe conditions that may cause serious injuries or death to your customers or others.

⚠ WARNING

Never run the engine in an enclosed area without a properly functioning exhaust gas evacuation system connected to the product.

⚠ WARNING

Engine and exhaust components get hot and remain hot for a period of time after the engine is stopped. Wear insulated protective clothing or wait for components to cool sufficiently before working on the machine.

⚠ WARNING

Engine exhaust from this product contains poisonous carbon monoxide gas that can cause loss of consciousness and may lead to death.

⚠ WARNING

Modifications to this motorcycle not approved by Victory may cause loss of performance, excessive emissions and make the machine unsafe for use.

GENERAL INFORMATION

SPECIAL TOOLS

SPECIAL TOOL	PART NUMBER
Body Panel Tool Kit	PV-49955 or commercially available equivalent

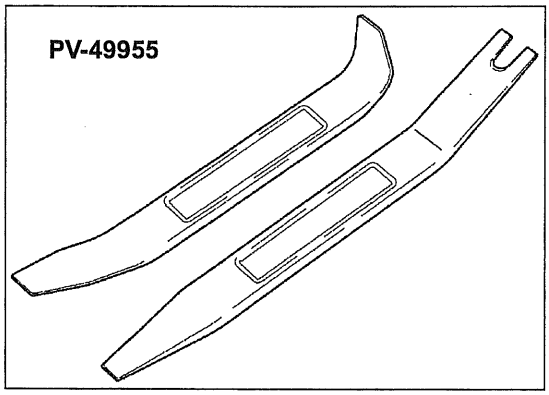

HOW TO USE THIS CHAPTER

- Body components in this chapter are arranged by their general location on the motorcycle - either FRONT or REAR body. (Fuel tank removal is in Fuel Tank Removal, page 5.19).
- For torque values of fasteners, fastener type, fastener location, and special notes refer to the ASSEMBLY VIEW for the component or group of components if provided.
- Most of the body panel fasteners have a 4mm internal hex drive or a 10mm hex head drive.
- For specific removal and installation steps refer to the REMOVAL / INSTALLATION PROCEDURE for the individual component.
- Use care when removing and installing cosmetic body parts. Some parts have friction fit tabs in addition to mechanical fasteners. Apply pressure as close to a tab as possible, supporting both parts until the tab releases or connects.
- Work carefully. Read the entire procedure before you begin so you are familiar with the parts.
- A non-marring wedge is essential to lift edges of mating parts without damage. Body Panel Tool Kit PV-49955 is recommended.

REMOVAL / INSTALLATION PROCEDURES - FRONT BODY

FRONT FENDER

Removal

1. Remove (A).
2. Carefully remove fender between the fork legs.

Installation

3. Install fender and align mounting holes.
4. Loosely install all screws with nuts.
5. Tighten all screws evenly to specification.

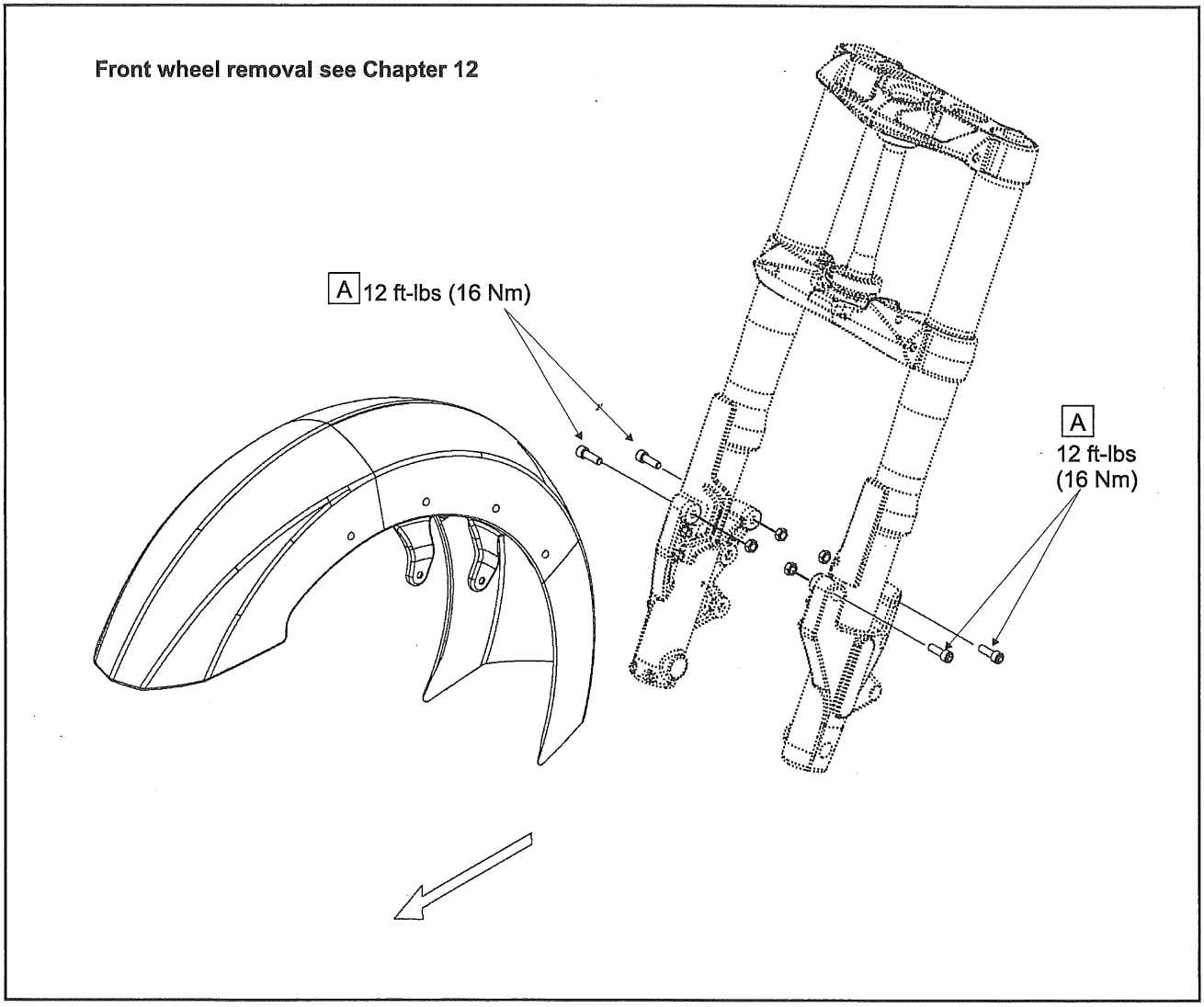

IGNITION SWITCH / IAC COVER

1. Grasp ignition switch cover (left side) or Idle Air Control (IAC) cover (right side) and pull outward to release 3 clips (A).

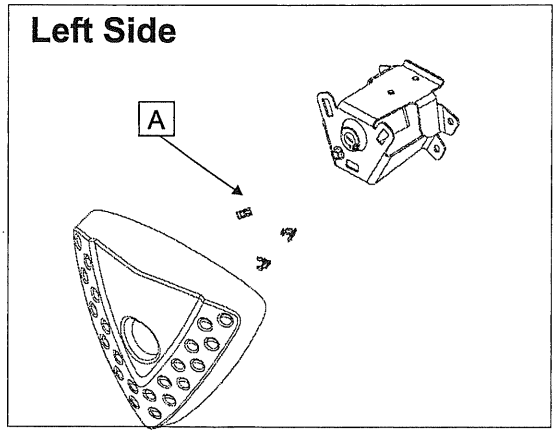

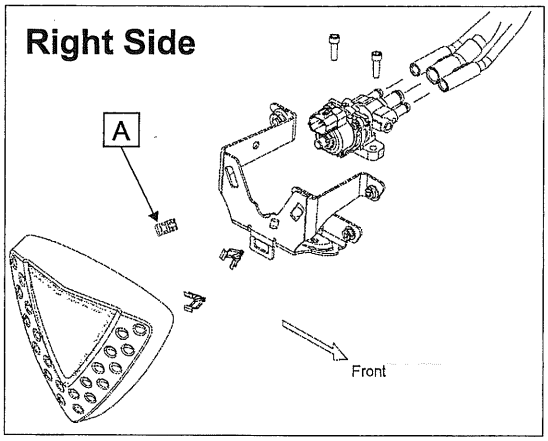

Installation

2. Be sure clips are in place and in good condition.
3. LH cover - route front spark plug wire below top of cover.
4. Push cover evenly inward to install.

IGNITION SWITCH / IAC COVER (CAST)

Removal

1. Remove two bolts (A) securing the ignition switch cover (left side) or Idle Air Control (IAC) cover (right side) and remove.

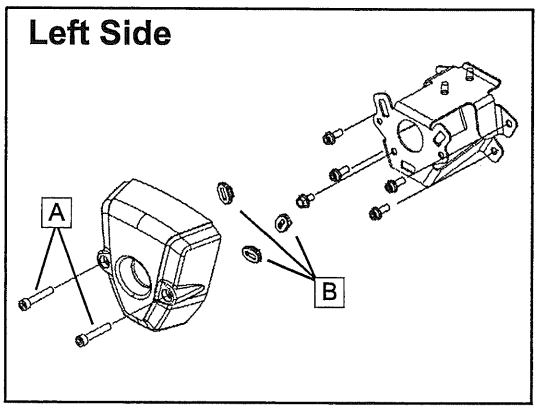

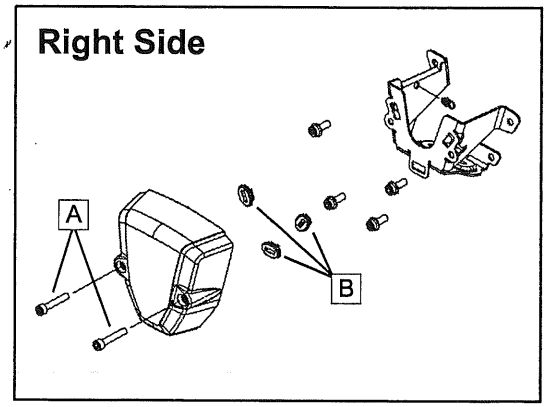

Installation

1. Be sure rubber isolators (B) are in place and in good condition.
2. Install bolts (A) and torque to specification.

TORQUE
Ignition / IAC Cover Bolts: **84 in-lbs (10 Nm)**

MIRRORS

Removal

1. Loosen jam nut (counterclockwise).
2. Rotate mirror to remove.

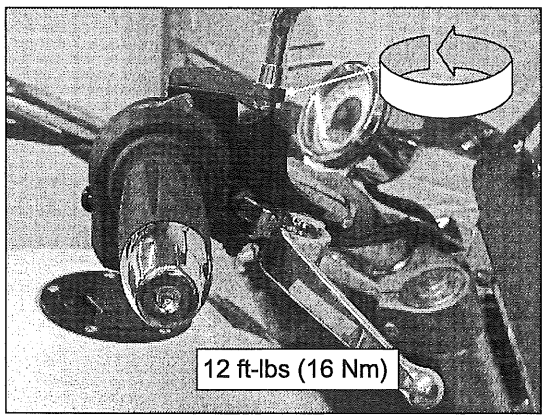

Installation

3. Screw jam nut to top of thread on mirror shaft.
4. Screw mirror into perch until bottomed, then back off to approximate angle required for rear view.
5. Screw jam nut until bottomed against perch.
6. Hold mirror shaft in position and tighten jam nut to specified torque.
7. Adjust mirror head to proper rear viewing angle.

WINDSHIELD (CROSS COUNTRY)

Removal

1. Loosen all screws (A) about 1/2 turn.
2. Support windshield and completely remove all screws and windshield.

Installation

3. Fairing removal is not required for windshield installation. Place windshield on support and align screw holes.
4. Start all screws and tighten until the shoulder of each screw is close to the windshield.
5. Tighten each screw, carefully aligning the shouldered portion of the screw with the hole in the windshield. Be sure shoulder of screw passes through hole in windshield and bottoms on the support bracket. Push or pull lightly on center of windshield if necessary to align the last screw.
6. Torque all screws evenly to specification. *Do not overtighten screws or windshield may be damaged.*

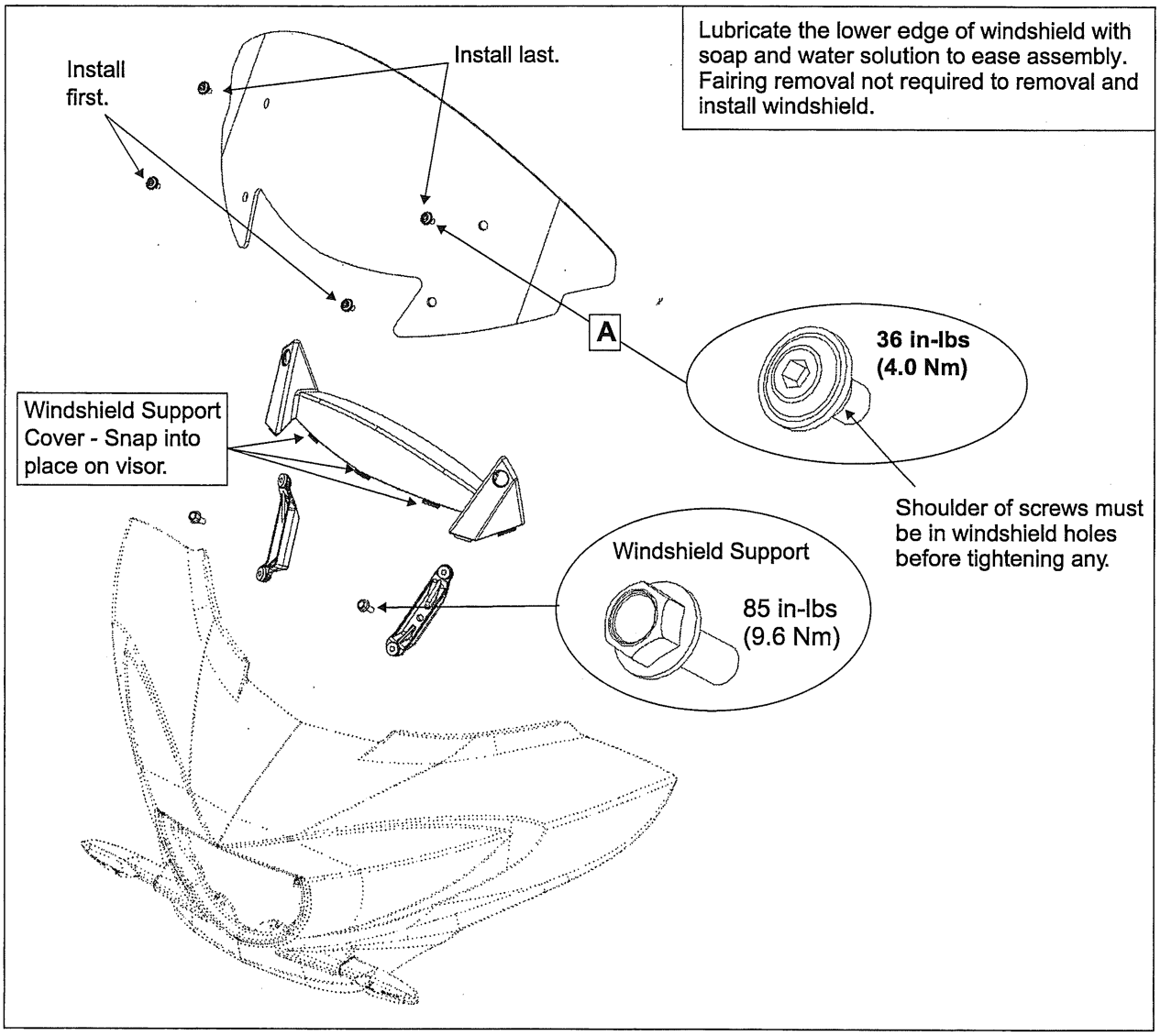

WINDSHIELD (CROSS COUNTRY TOUR)

Removal

1. Loosen all shoulder screws (6) and nuts (Fig. 3) about 1/2 turn.
2. Support windshield and completely remove all screws and windshield.

Installation

3. Fairing removal is not required for windshield installation. Place windshield on supports and align screw holes.
4. Verify that rubber washers are in place (Fig. 4). If any rubber washers (6) are missing, they must be replaced. Start all screws and tighten until the shoulder of each screw is close to the windshield.
5. Tighten the screws, starting with top two. Carefully align the shouldered portion of the screw with the hole in the windshield. Be sure the shoulder of the screw passes through the hole in windshield and bottoms out on the bracket.
6. Torque all screws evenly to specification. Do not overtighten screws or windshield may be damaged.

Fig. 1

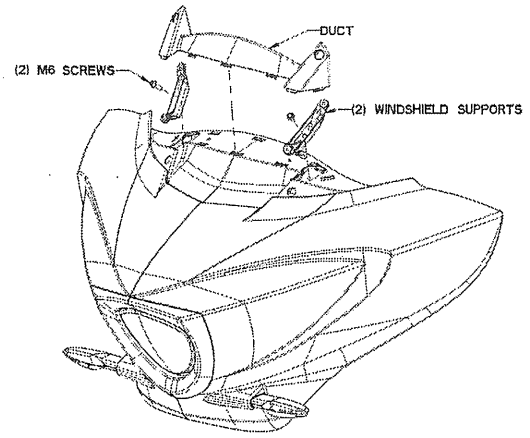

Fig. 2

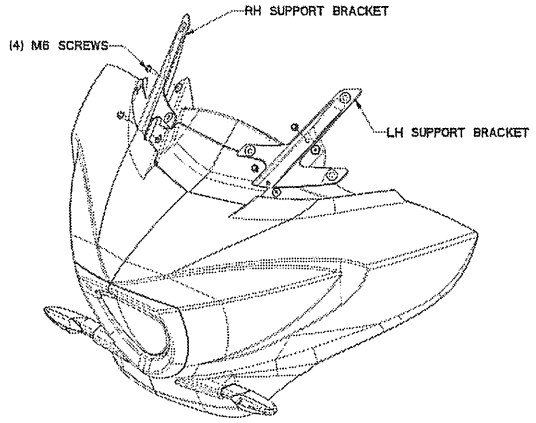

Fig. 3

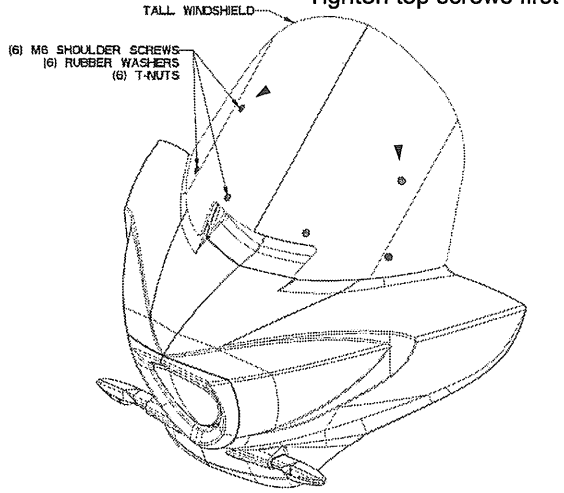

Fig. 4

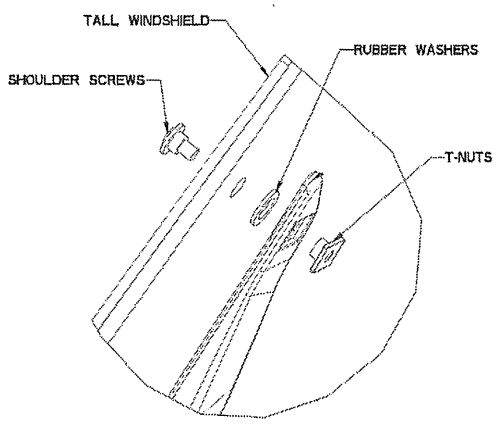

TORQUE
Windshield Screws: **36 in-lb (4 Nm)**

WINDSHIELD (MAGNUM / X-1)

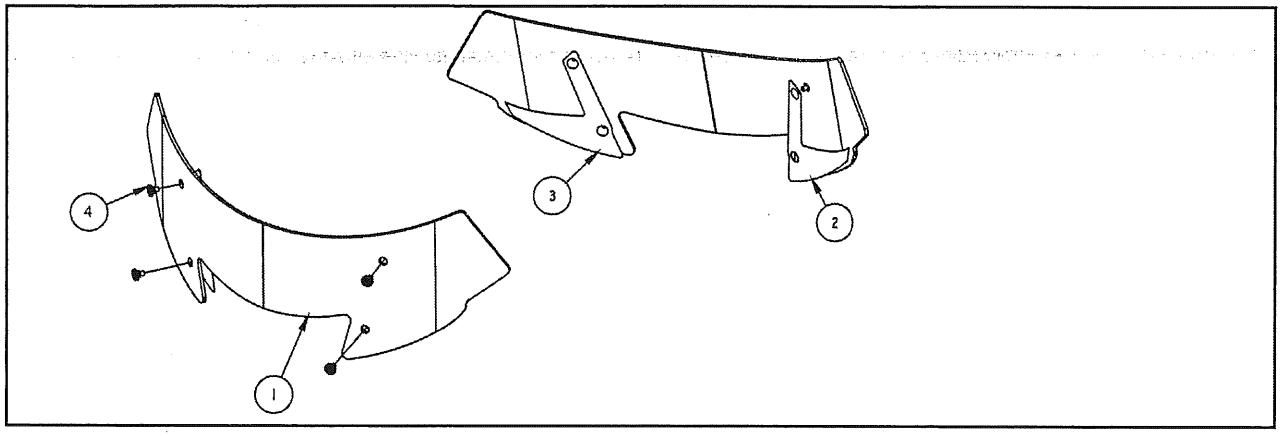

Removal

1. Release the visor duct ① by releasing each of the retention tabs. Ensure all tabs have been fully released.
2. Locate the two windshield supports ②③ on the vehicle and remove the M6 x 16 hex flange head bolts ④.

Installation

1. Locate the two hex flange head bolts ④, two windshield support brackets ②③, and visor duct in the saddlebag ① .
2. Locate the two windshield supports on the vehicle and install using the M6 x 16 hex flange head bolts. Torque bolts to specification.

TORQUE

Windshiled Support Bolts:
84 in-lb (10 Nm)

3. Snap the visor duct in place aligning the tabs with slots in the visor. Ensure all tabs have been fully snapped in place.

NOTE

If installing the factory windshield for the first time, locate the stainless steel M6 shoulder fasteners in the saddlebag kit. If installing a replacement accessory windshield, remove and reuse the bolts from the existing windshield mounting.

⚠ WARNING

Failing to torque the screws properly may result in the loss of a screw in service. A lost screw will require replacement. Recheck windshield screw torque at 50 to 100 miles.

Boomerang Windshield

1. Slide the windshield in place between the fairing and the windshield supports/visor.

NOTE

Using a small amount of soapy water on both sides of the windshield at the base will help insertion of the windshield between the visor and fairing. The fairing does not need to be removed for the windshield assembly.

2. Align the four holes in the windshield with the four holes in the supports.
3. Install the four Stainless Steel M6 shoulder bolts supplied in the saddle bag kit from the factory.

NOTE

It is recommended to place the two forward bolts loosely in the holes first, then one of the rear bolts. It may be required to push in or pull forward in the center top of the windshield to align the remaining hole.

4. Make sure the shoulders clear the plastic windshield and bottom out in the windshield support. Torque to specification.

TORQUE

Windshield Shoulder Bolts:
36 in-lb (4 Nm)

5. Reverse the installation process to remove the windshield.

HEADLAMP BEZEL

Removal

1. Using body tool PV-49955, pry one edge of bezel from fairing then pull straight forward to release clips. Do not bend or rotate bezel during removal.

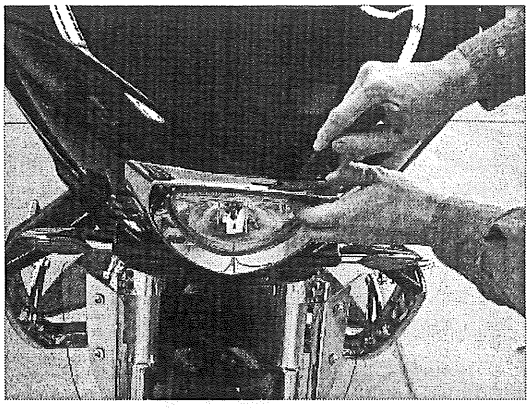

Installation

2. Align tabs with spring clip slots.
3. Push straight inward until seated.

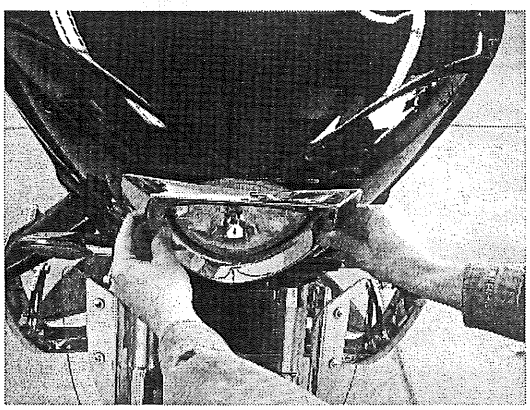

NOTE

Headlamp removal is in Headlamp, Halogen, page 3.11.

HEADLAMP, HALOGEN

Also refer to Assembly View on following page.

Removal

1. Remove headlamp bezel (Headlamp Bezel, page 3.11).
2. Remove two upper screws (A) and 2 lower screws (B).
3. Slide headlamp out of fairing.

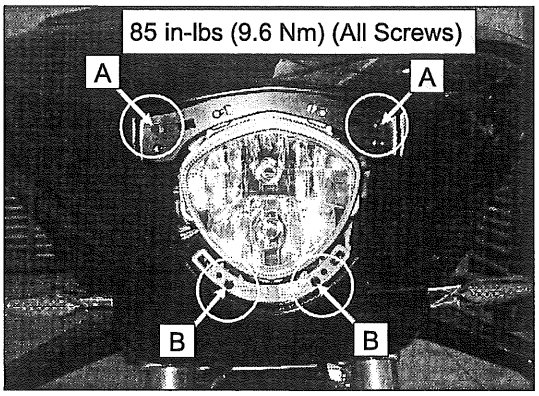

4. Note orientation of bulbs in headlamp. Top bulb wiring harness faces left.
5. Lift tab to disconnect headlamp wire harness or turn each bulb socket 1/4 turn to remove socket with wires attached. Do not touch glass surface of bulb. Bulb can be cleaned with isopropyl alcohol to remove oil residue if contaminated.

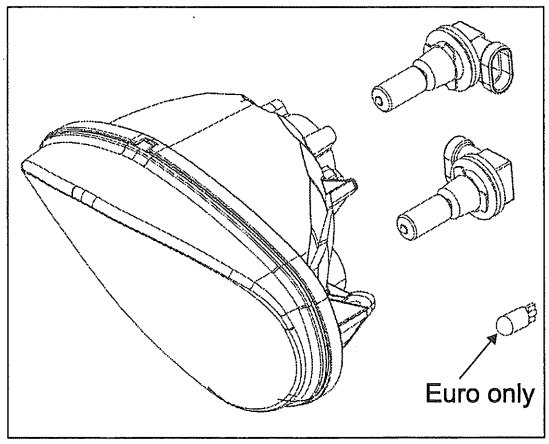

Installation

1. Note wire harness tag marked "TOP BULB" for proper installation in upper headlamp socket (yellow wire is top and green is bottom). Connect wires or install bulbs in sockets.

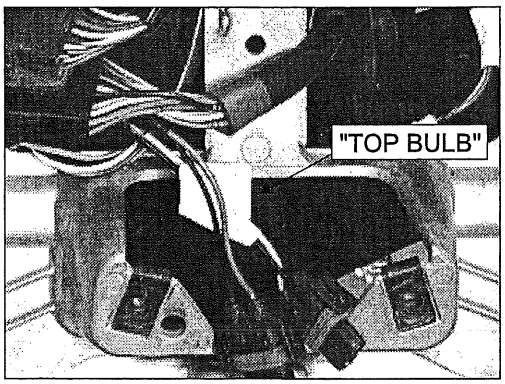

2. Torque mounting screws to specification.
3. Install headlamp bezel.

HEADLAMP, LED

Removal

1. Remove the headlamp bezel.
2. Remove the two upper screws and two lower screws.
3. Slide the headlamp out of the fairing.
4. Note the orientation of bulbs in the headlamp. The top bulb wiring harness faces left.
5. Lift the tab to disconnect the headlamp wire harness, or turn each bulb socket 1/4 turn to remove socket with wires attached. Do not touch the glass surface of the bulb.
6. The bulb can be cleaned with isopropyl alcohol to remove oil residue if contaminated.

Installation

1. Locate the wire harness tag marked "TOP BULB" for proper installation in upper headlamp socket (yellow wire is top and green is bottom). Connect wires or install bulbs in sockets.
2. Torque mounting screws to specification.
3. Install headlamp bezel.

HEADLAMP, HID

⚠ WARNING

HID (High-Intensity Discharge) head lights utilize extremely high voltage during bulb ignition. To prevent accidental shock, disconnect power supply and wait 5 minutes before servicing. Failure to comply could result in serious personal injury.

Removal

1. Make sure ignition is turned OFF and wait 5 minutes before proceeding to step 2.
2. Remove headlamp bezel (Headlamp Bezel, page 3.11).
3. Remove four screws (A) securing headlamp assembly and withdraw headlamp from fairing.

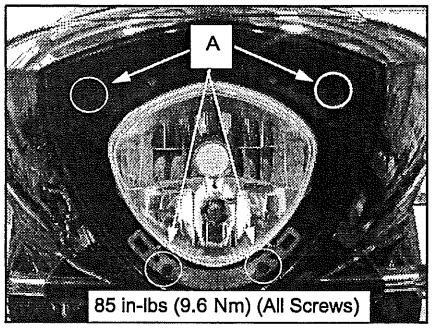

4. Disconnect electrical connectors from HID bulb and high beam bulb and remove headlamp assembly.

NOTE

If HID bulb requires replacement, remove screws (B) from housing and remove bulb.

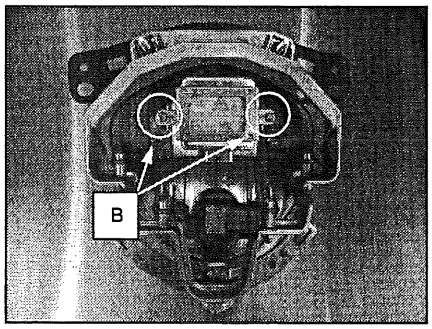

HEADLAMP ASSEMBLY VIEW, HALOGEN

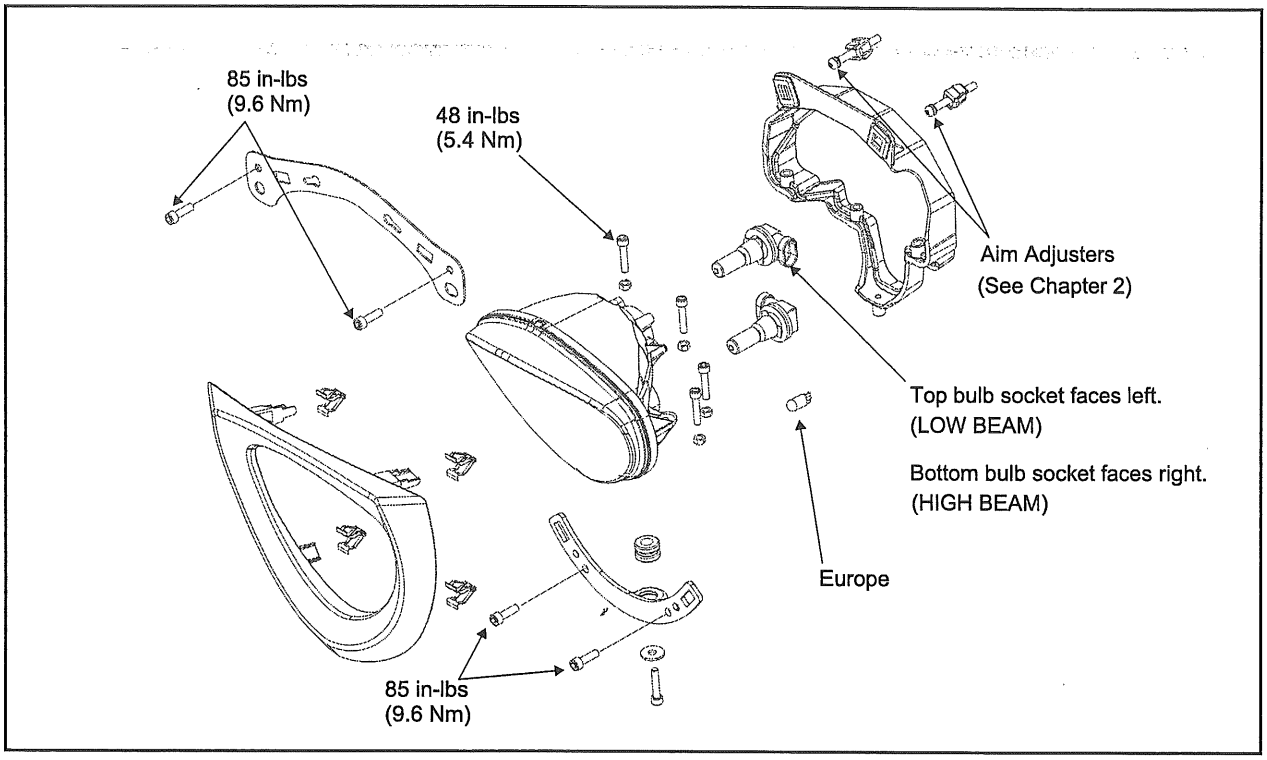

HEADLAMP ASSEMBLY VIEW, HID

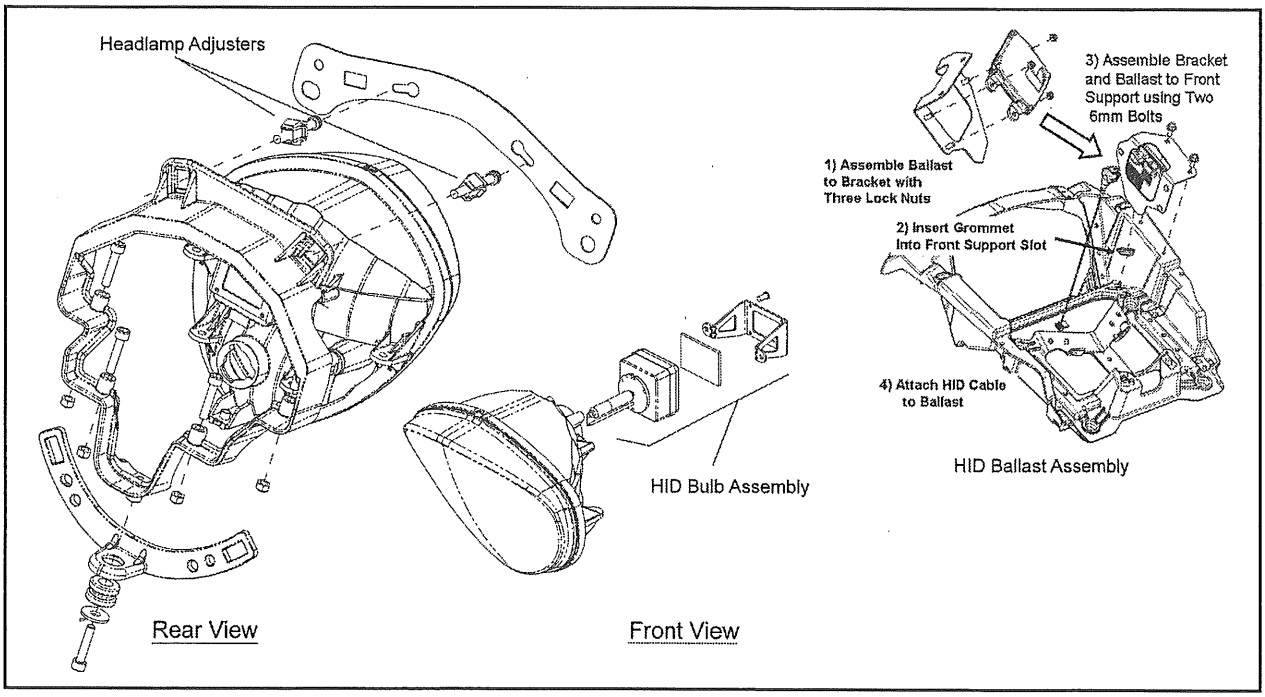

HEADLAMP ASSEMBLY VIEW, LED

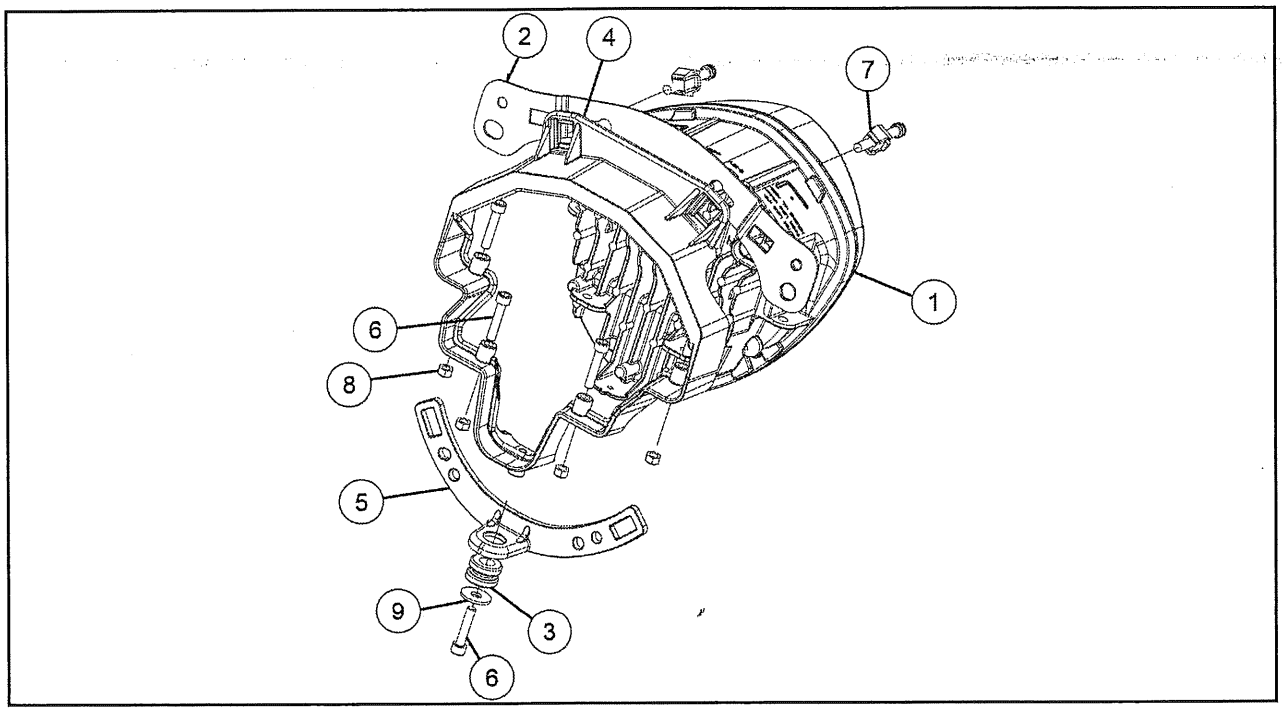

① Bulb, LED	⑥ Screw — M5 x 0.8 x25 (QTY. 2)
② Bracket, Headlight Assembly	⑦ Screw, Headlight Adjuster
③ Grommet	⑧ Nut, Nylok — M5 x 0.8
④ Bracket, Headlight Carrier (upper)	⑨ Washer
⑤ Bracket, Headlight Carrier (lower)	

HID BALLAST SERVICE

Removal

1. Remove HID headlamp assembly (Headlamp, HID, page 3.12).
2. Working from the front of the bike, reach through the headlamp port and disconnect the two ballast electrical connectors (A).
3. Remove the two bolts (B) securing the HID ballast bracket to the fairing and carefully lift the ballast / bracket assembly out through the headlamp port.

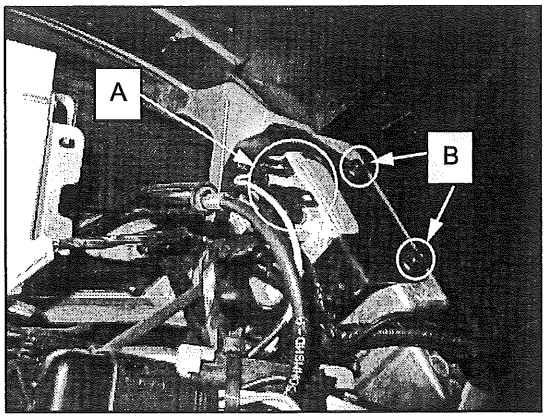

Installation

NOTE
Ensure rubber grommet is in position at base of HID bracket before proceeding.

4. Reverse procedure for installation.

AUXILIARY DRIVING LIGHTS (CROSS ROADS)

Removal

1. Remove bolt (A) securing turn signal assembly and driving lamp mounting bracket to light bar.

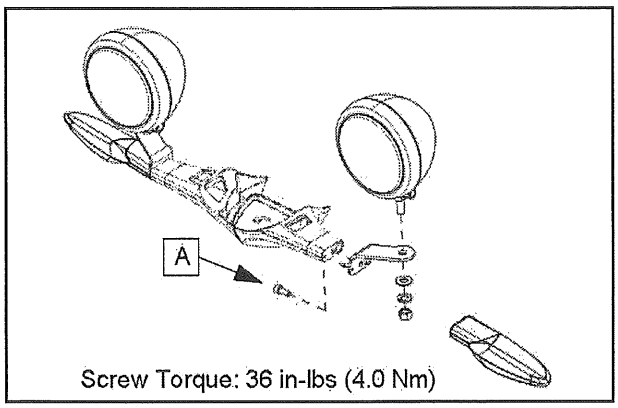

2. Remove driving lamp / mount assembly.

Installation

1. Reverse procedure to install. Torque screws to specification.

TORQUE
Driving Light Screws: **36 in-lb (4 Nm)**

SPEAKER GRILL

Removal

1. Using body tool, pry outward carefully in area shown to release one edge of grill then pull straight outward to release all tabs. Do not bend or rotate the grill during removal.

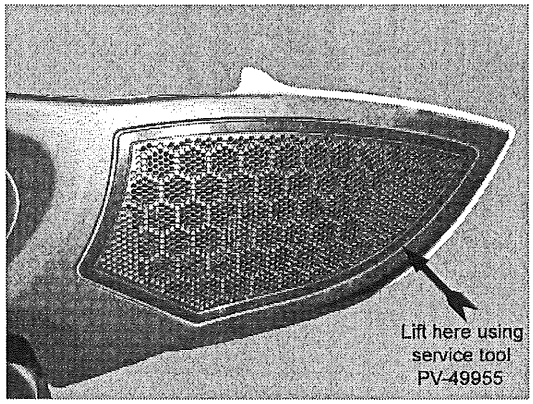

3

FRONT FAIRING - UPPER (CROSS COUNTRY)

Removal

1. Remove headlamp bezel and headlamp (Headlamp, Halogen, page 3.11).
2. Remove both speaker grills (Speaker Grill, page 3.15).
3. Remove screws indicated below.

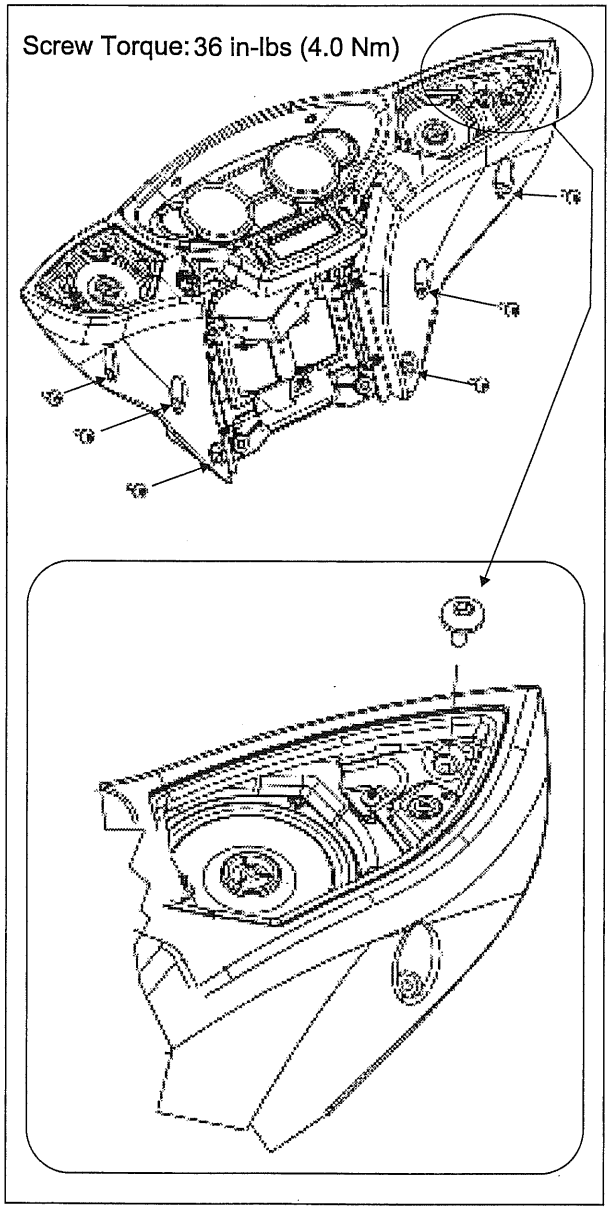

4. Grasp fairing by the upper edge (near the visor) and in the lower center headlight opening. Pull forward on the bottom edge and then the top to remove.
5. Disconnect turn signal wires (push small white tab).

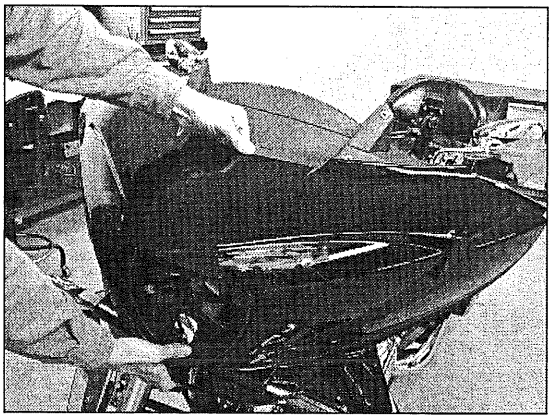

Installation

6. Place the two tabs (A) on the fairing into the slots on the front support.
7. Be sure wires are not trapped in area (B).
8. Pull the fairing down and forward in area (C) to snap fairing alignment pin into the hole in the front support.

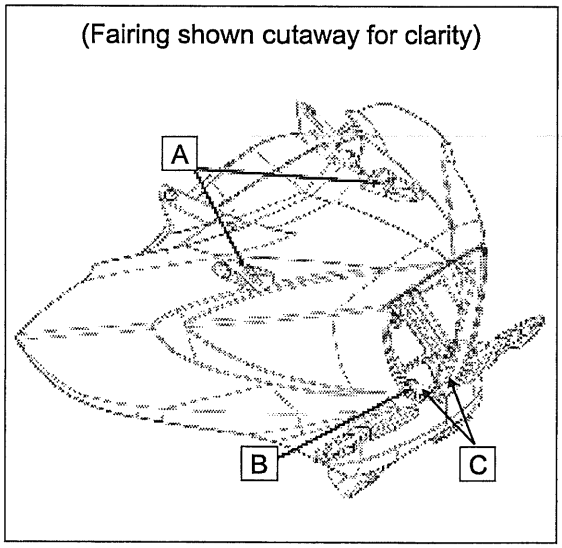

9. Install screws and torque to specification.

TORQUE
Fairing Screws: **36 in-lb (4 Nm)**

10. Install speaker grills (Speaker Grill, page 3.15), headlamp (Headlamp, Halogen, page 3.11), headlamp bezel (Headlamp Bezel, page 3.11), and windshield (Windshield (Cross Country) ; page 3.8, if removed).

DASH PANEL

Also refer to Fairing Assembly Views Fairing Mount Assembly View (Cross Country), page 3.18.

1. Remove fairing (Front Fairing - Upper (Cross Country), page 3.16) and windshield (Windshield (Cross Country) , page 3.8).
2. Remove (6) screws indicated below.

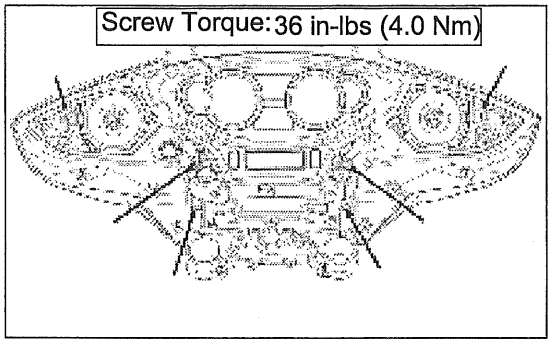

3. Remove (2) screws above the instruments.

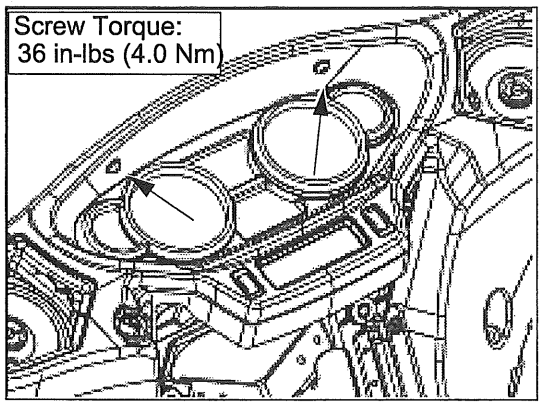

4. Remove (2) screws located underneath the information display area.

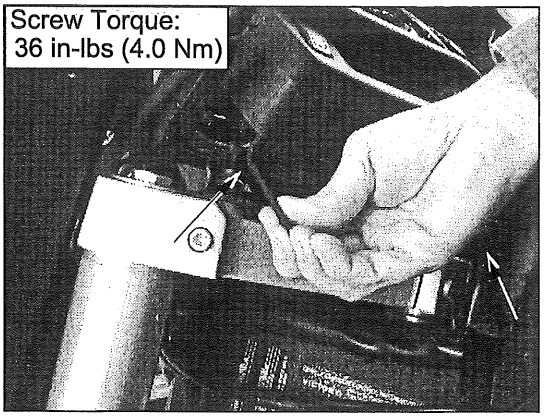

3

FAIRING MOUNT ASSEMBLY VIEW (CROSS COUNTRY)

NOTE: Fairing mount can be removed with inner fairing, dash panel, speakers (and related wiring), radio, and fairing wire harness in place. The left and right handlebar switches and the left and right main wire harnesses must be disconnected from mating connectors inside the fairing and the P-Clamps (A) removed. See Fairing Mount Assembly removal in this chapter.

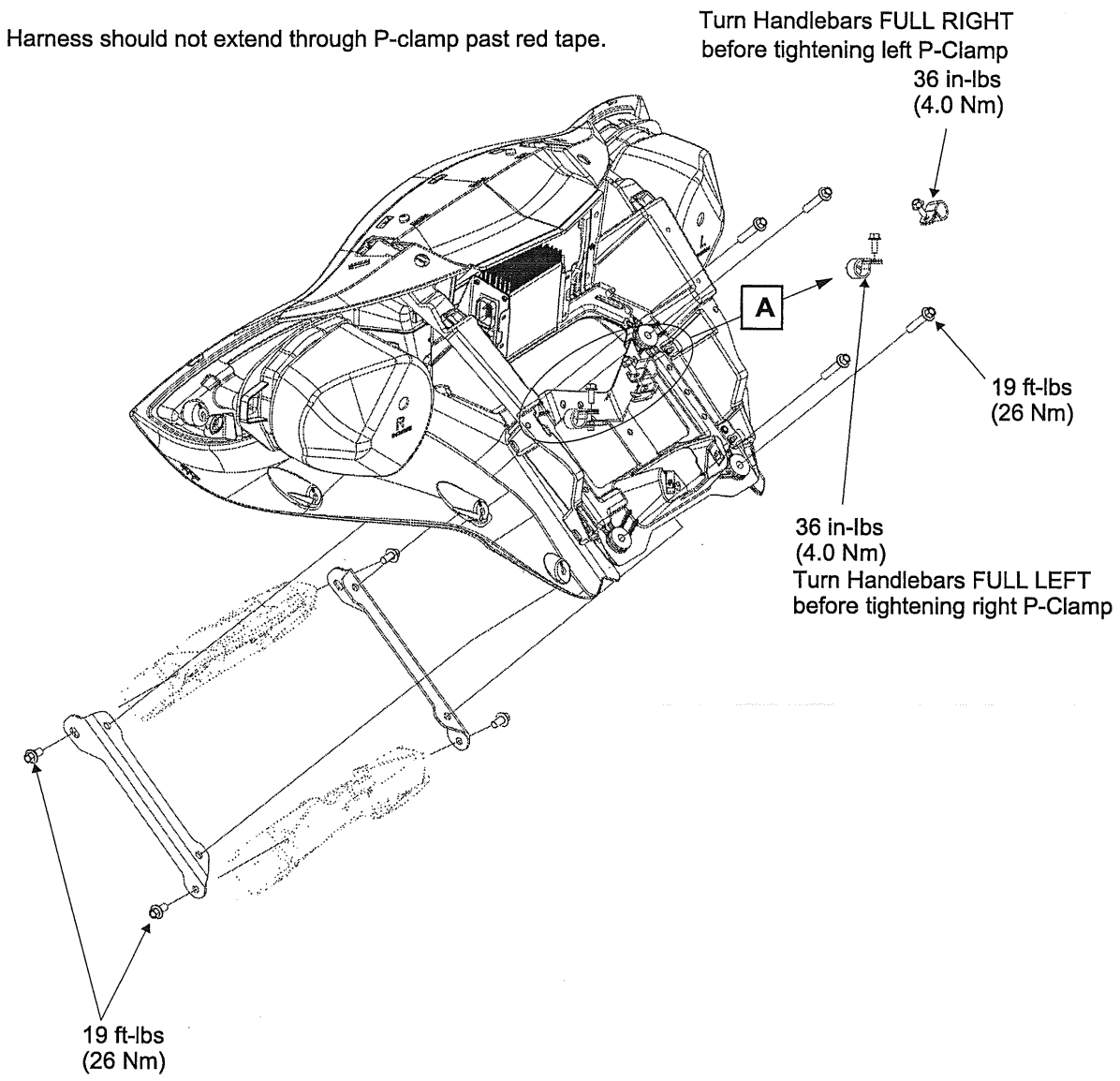

FAIRING MOUNT REMOVAL

1. Remove fairing (Front Fairing - Upper (Cross Country), page 3.16) .
2. Cut tie straps (A). Radio (s), radio fuse, and instrument cluster harnesses (B) can remain connected.
3. Remove P-Clamp fasteners (C) for left and right wire harnesses. Separate any associated connectors (D) for main harnesses and any that are routed through the two openings in the fairing mount bracket (handlebar switch wires and radio antenna cable). Disconnect the radio LCD display harness (routed below the radio).
4. Remove (4) mount bolts (E) and lift fairing mount assembly upward off handlebar clamp, then forward to remove. Check for any remaining wires attached.

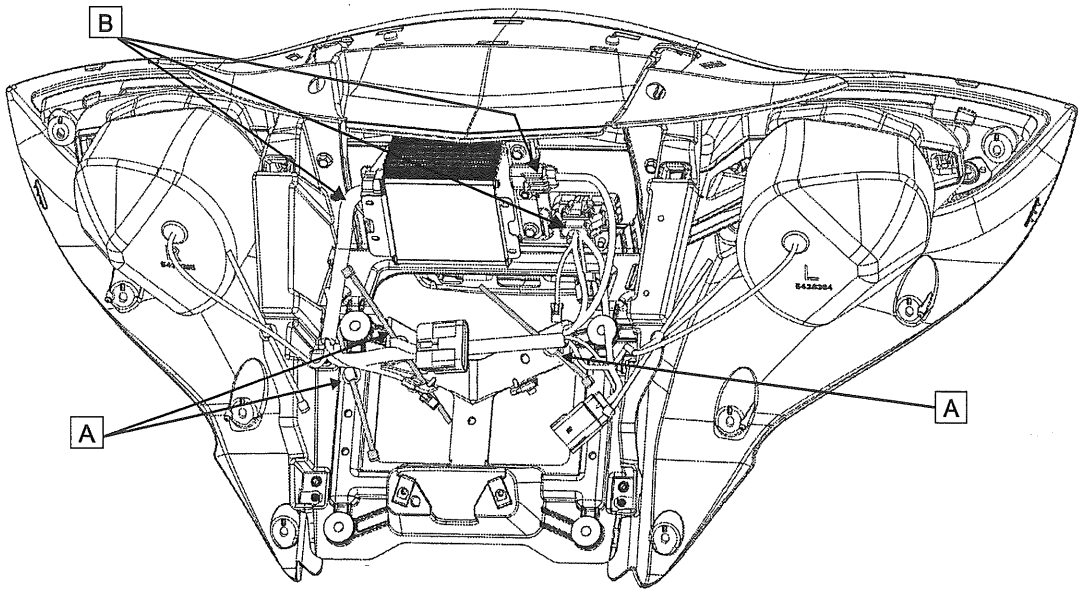

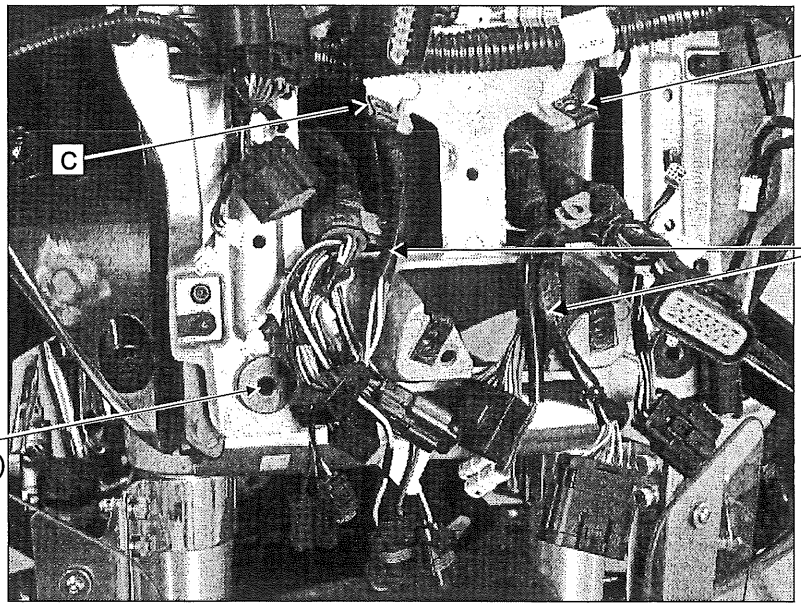

FAIRING ASSEMBLY (MAGNUM)

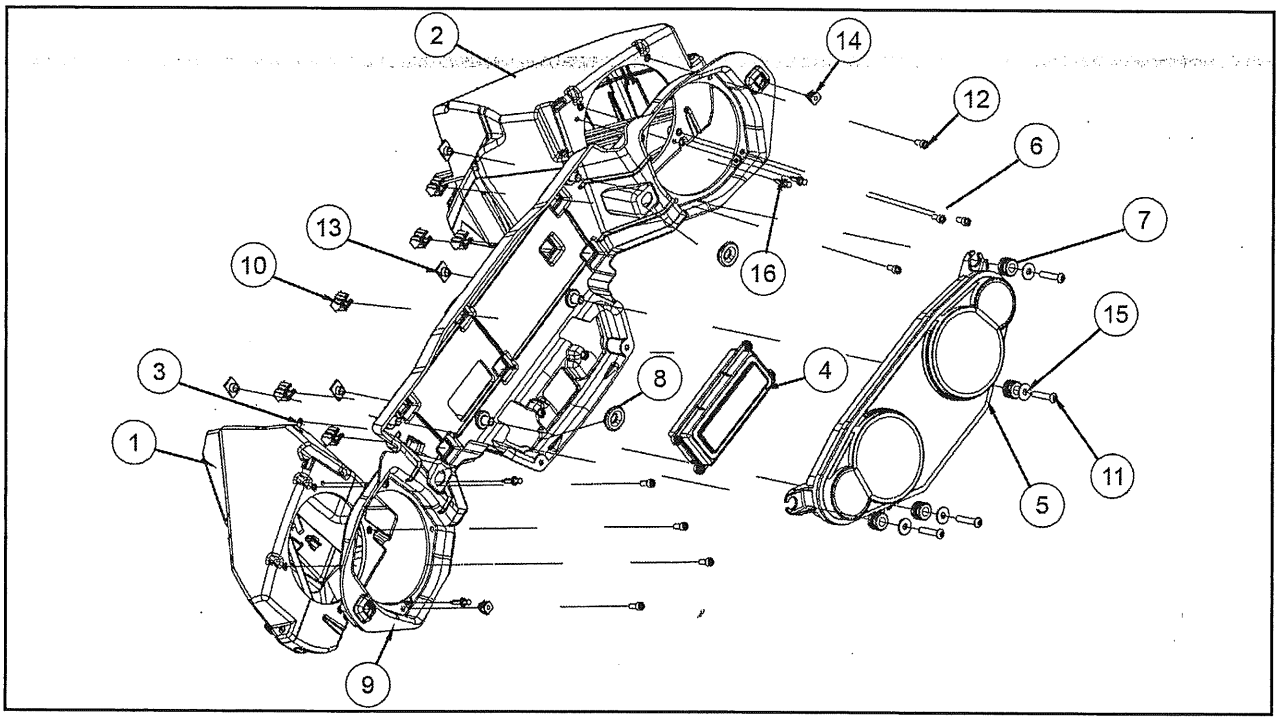

① Housing, Speaker (right)	⑨ Support, Front (Dash)
② Housing, Speaker (left)	⑩ Clip
③ Air Temperature Sensor (Gauge)	⑪ Screw — M6 x 1 x 30
④ Radio Display Module	⑫ Screw — M5 x 0.8 x 12
⑤ Instrument Cluster	⑬ Nut — M6
⑥ Screw	⑭ Nut — M4
⑦ Grommet	⑮ Washer
⑧ Grommet, Side Cover	⑯ Rivet

INSTRUMENT CLUSTER

INSTRUMENT CLUSTER REMOVAL

1. Remove front fairing (page 3.12).
2. Remove dash panel (page 3.13).
3. Lift red lock tab (A) on cluster harness connector and slide it off the connector.
4. Push connector tab and pull to separate connector from cluster.
5. Remove screws and cluster.

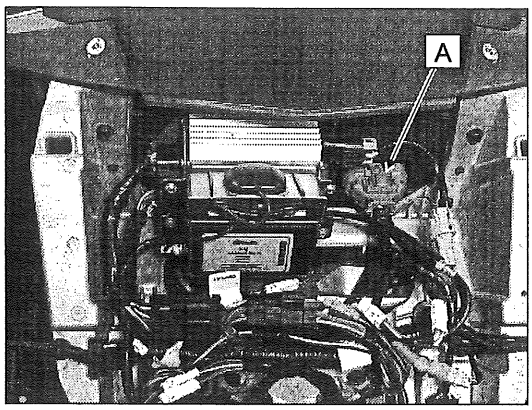

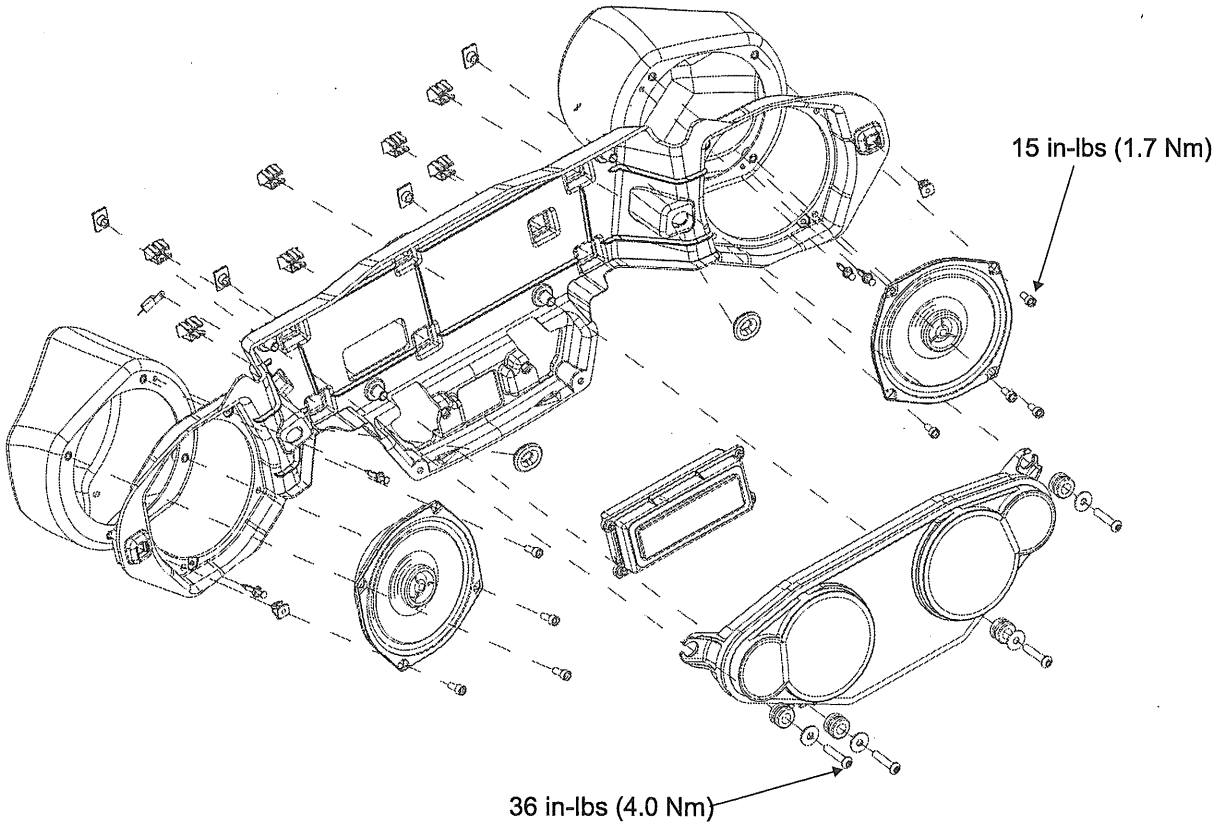

TURN SIGNAL

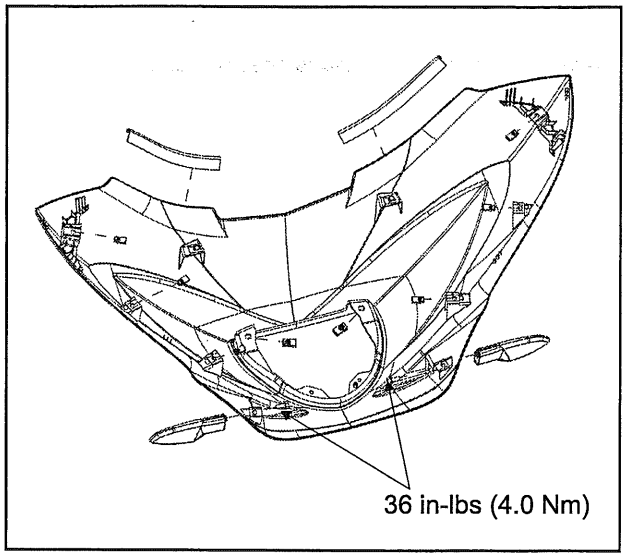

VISOR

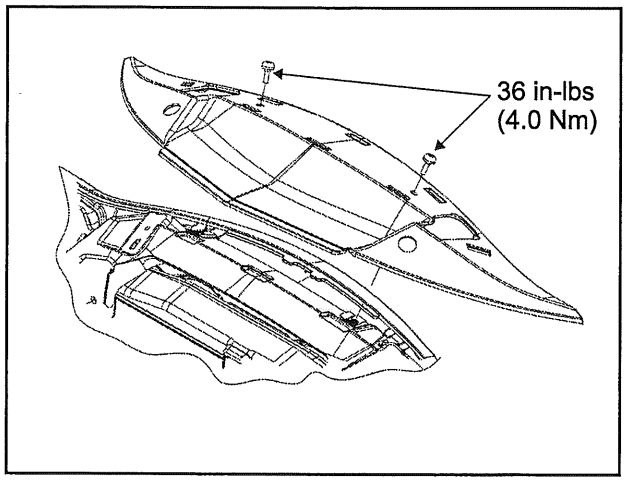

CHIN FAIRING (INNER GRILL)

Removal

1. Remove (4) screws with washers (A).

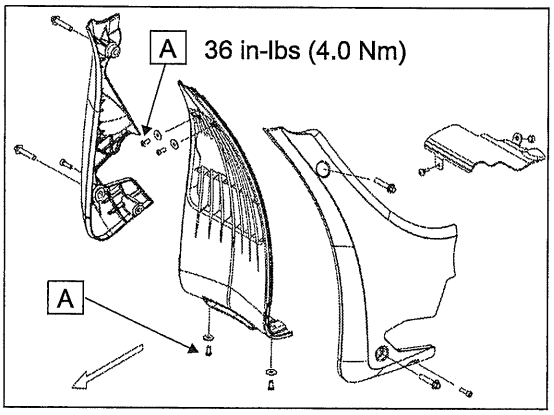

2. Push grill to right side until tabs on left edge are clear of left outer chin fairing.
3. Remove grill.

Installation

4. Engage tabs on right edge of fairing grill with right outer chin fairing.
5. Push fairing toward right side and tip inward to engage left side tabs with left outer chin fairing.
6. Align holes and install screws with washers.
7. Tighten screws to specified torque.

CHIN FAIRING (OUTER AND REAR)

Removal

1. Remove oil cooler mount nut (B) (on left side only).
2. Remove lower screw (C).
3. Remove upper and lower screws (D).

4. Remove rear chin fairing screw (E).

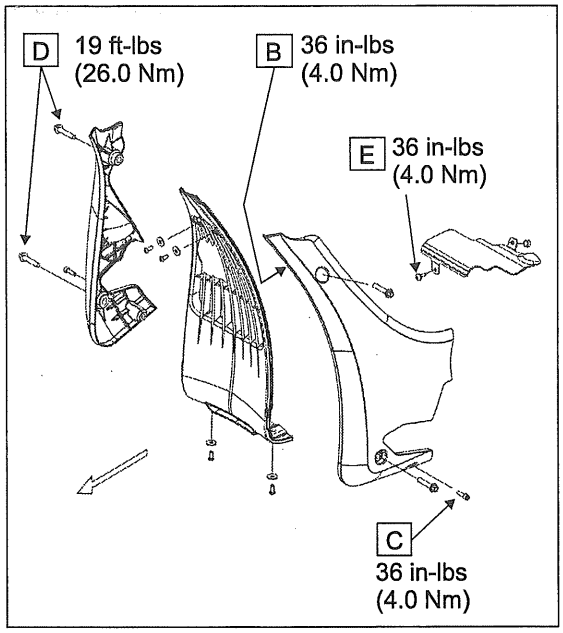

Installation

5. Reverse removal steps.

HIGHWAY BARS

Removal (Tubular)

1. Slide boot (A) off top mount.
2. Remove fasteners (B) (M15).
   Installation
3. Align mount holes and loosely install all fasteners.
4. Tighten all fasteners.

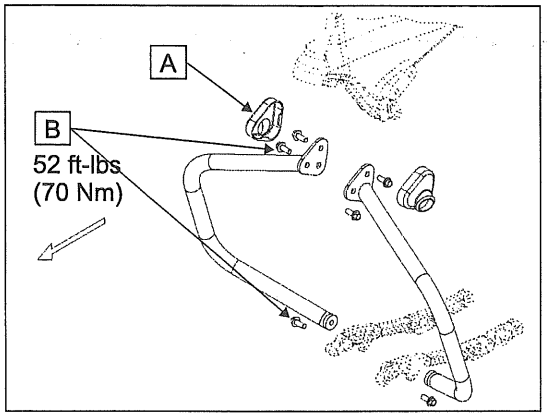

Removal (Forged)

5. Remove fasteners (C).
6. Remove fasteners (D).
   Installation
7. Align mount holes and loosely install all fasteners.
8. Tighten all fasteners.

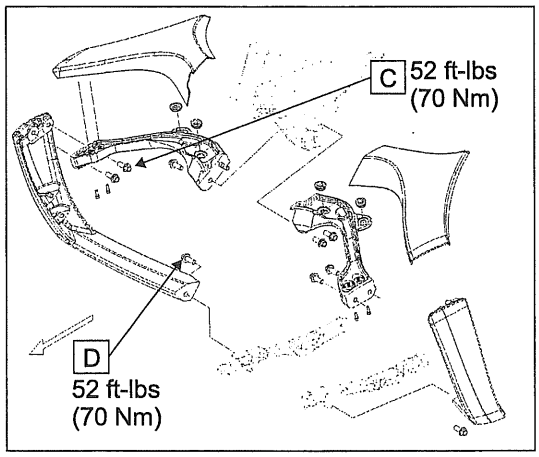

Removal - Top Cover (Forged)

9. Remove fasteners (E).
10. Lift cover to release pegs from grommets (F).
    Installation
11. Lubricate grommets with soapy water.
12. Align pegs and push to seat in grommets.
13. Align mount holes and loosely install all fasteners.

14. Tighten all fasteners.

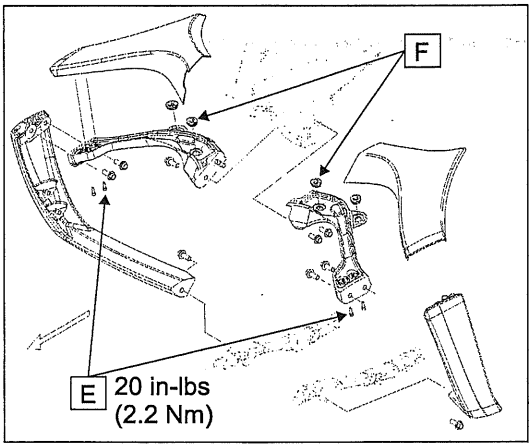

FRONT FAIRING - LOWER - (CROSS COUNTRY TOUR)

Removal

1. Remove screws (4 per side) securing outer fairing to inner fairing.

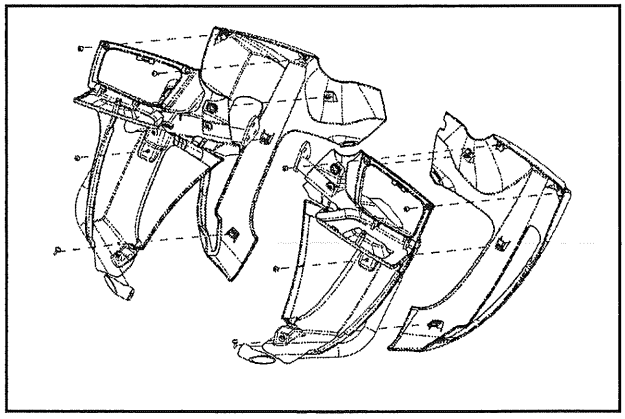

2. Disengage retainer from rubber grommet and remove outer fairing.

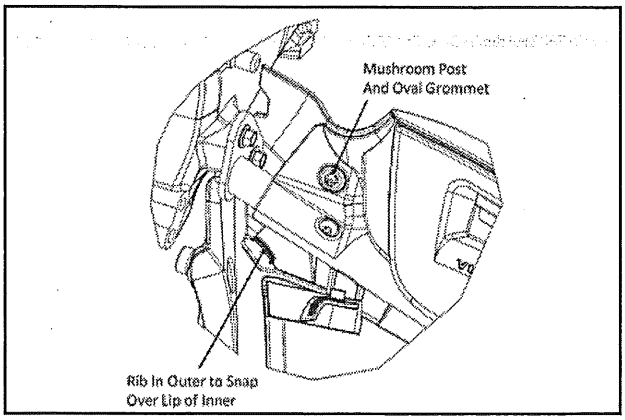

3. Remove screws and nuts (3 per side) securing inner fairing to mounting clamps.

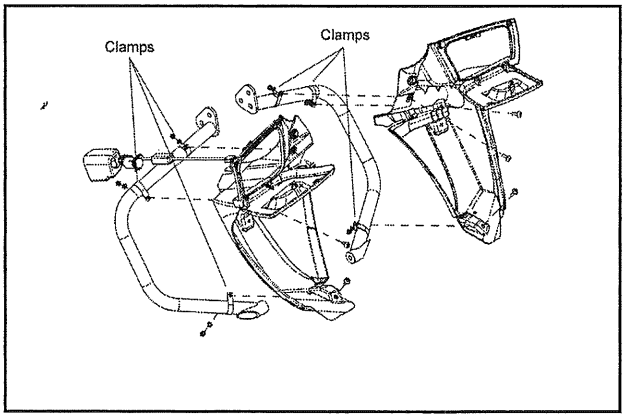

4. Disconnect ACC socket and iPod adapter multi-plug and remove lower fairing inners.

NOTE

Multi-plug is tucked beneath fuel tank. It is not necessary to remove fuel tank to access multi-plug.

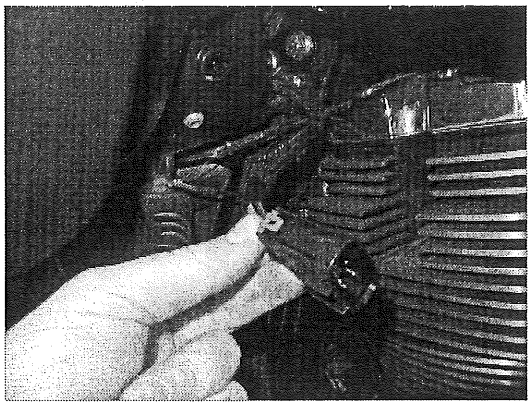

Installation

5. Position fairing clamps (3 per side) on highway bars as shown.

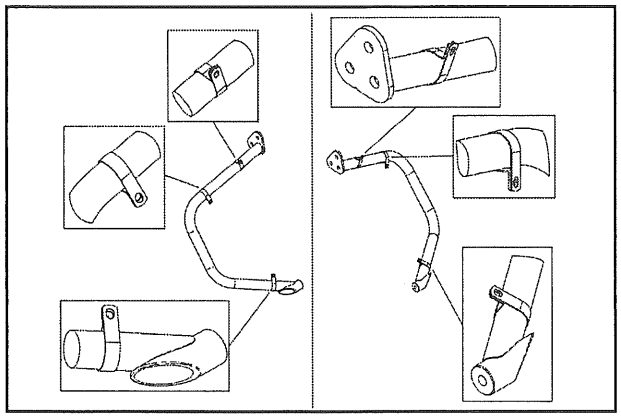

NOTE

The clamps can be pinched together with a pliers to help align holes.

6. After mounting clamps have been properly located on the highway bars, loosely mount fairing inners to clamps. Screws (3 per side) should be started from the fairing-side and nuts threaded on finger tight.

⚠ WARNING

Failure to locate the inner assembly far enough outboard on the bar could cause interference with the optional adjustable upper fairing wind deflectors. Prior to operating bike, verify that there is no interference with the adjustable wind deflectors or any other bike part by moving the handlebars from full left to full right position.

7. Once the fairing inners have been adjusted properly, torque screws and lock nuts to specification.

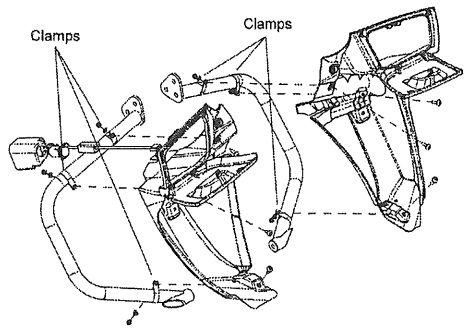

Torque Lower Fairing Fasteners (6) to:
32 in-lbs (3.6 Nm)

TORQUE

Fairing Inners:
32 in-lb (4 Nm)

8. Reconnect ACC socket and iPod adaptor multiplug and reposition harness beneath fuel tank.
9. Move fairing outers into position and press retainers into rubber grommets.

3

10. Insert screws (4 per side) to secure inner fairing panel to outer fairing panel and torque screws to specification.

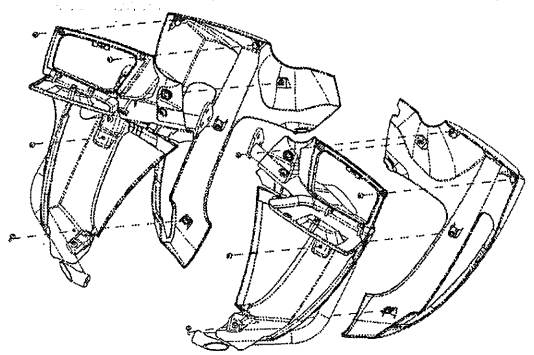

Torque to 32 in-lbs (3.6 Nm)

TORQUE
Inner Fairing to Fairing Panel: **32 in-lb (4 Nm)**

INSTRUMENT BEZEL (CROSS COUNTRY)

Bezel removal is not required for removal of dash panel or other fairing parts. To remove the bezel, first remove the dash panel.

Removal

1. Remove dash panel (Dash Panel, page 3.17).

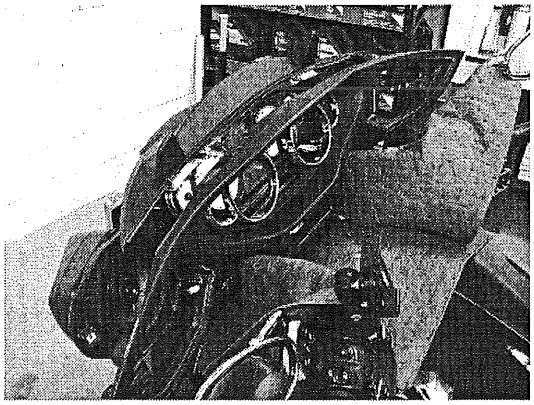

2. With dash panel removed, carefully pry inner tabs (A) and push bezel toward front side of dash until tabs are released.

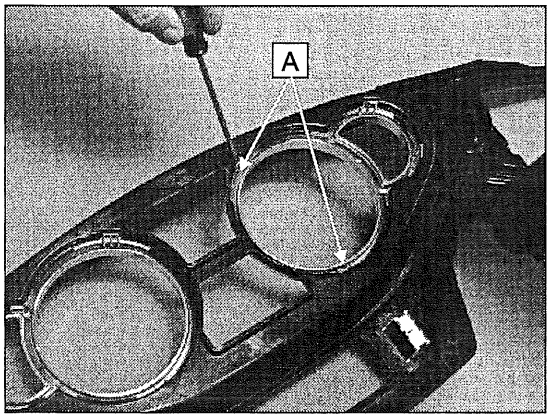

3. Carefully pry outer tabs (B) and push bezel toward front side of dash to remove.

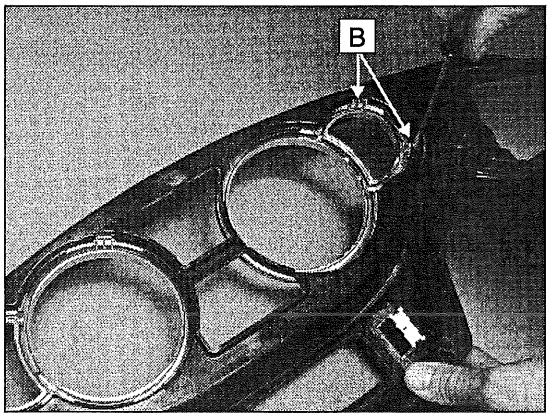

Installation

4. Reverse removal procedure to install bezel. Align bezel with opening in dash panel.
5. Place outer tabs into opening and hook tabs on inside edge of dash.
6. Press inner edge of bezel toward dash until it snaps into place and all tabs are engaged with the inside edge of dash panel.
7. Install dash panel.

REAR BODY

SIDE COVER REMOVAL

1. Pull corners of left or right cover evenly straight outward to disengage each tab ① from rubber grommet ②.

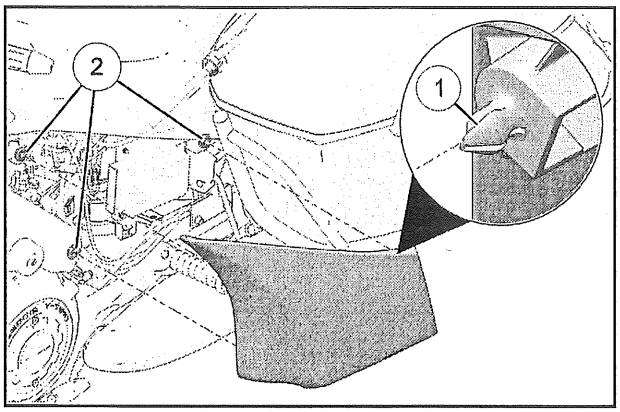

Installation

2. Be sure rubber grommets are in place and not dislodged.
3. Lubricate rubber grommets with mild soap and water solution. Push cover evenly inward on all 3 corners until tabs are securely engaged.

SEAT

NOTE

Motorcycles equipped with heated seats must be unplugged prior to removal. Seat heater plug is located at the back of the seat.

Removal

1. Remove side covers.
2. Remove seat bolt (C) on each side.

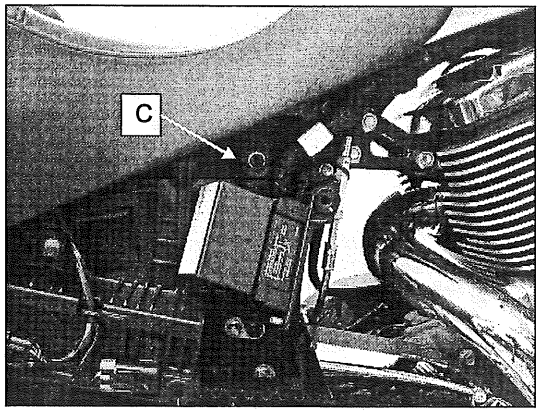

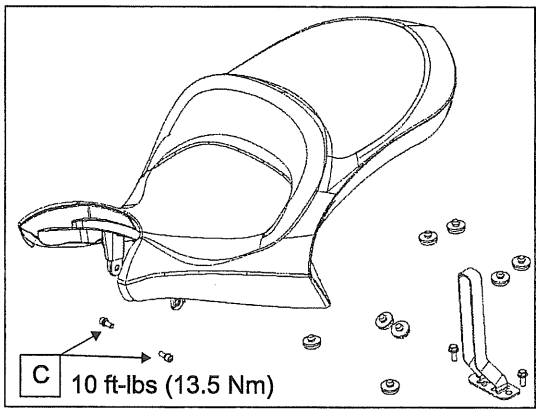

3. Lift front of seat upward and pull forward to disengage tab at rear of seat. Disconnect wire harness for heated seat (if equipped).

Installation

4. To install, reverse above process. Be sure rear tab of seat is engaged in slot.
5. Tighten seat bolts to specification.

SADDLEBAG, REMOVAL / INSTALLATION (UNBOLTED)

Removal

1. Open saddlebag lid.
2. Lift each D-ring and rotate counterclockwise 1/4 turn from the horizontal position to the vertical position to release the pin. Do not remove the D-ring pins from the saddlebag.

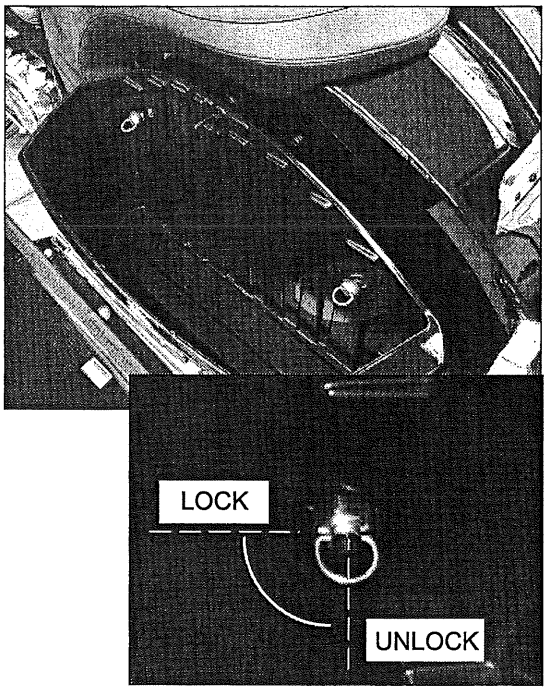

3. Tip bag outward slightly away from bracket.
4. Disconnect electrical connectors and lift bag up off muffler support to remove.

Installation

5. Set bag in place on muffler support.
6. Rotate each D-ring to the vertical position.
7. Move saddlebag until D-ring pins align with holes on bag bracket.
8. Hold light pressure inward on saddlebag and (if necessary) rotate both D-ring pins back and forth from vertical slightly until slot of pin engages latch wire on saddlebag bracket.
9. When both pins are engaged, rotate each pin 1/4 turn counterclockwise until locked.
10. Pull lightly outward on front and rear of bag to ensure pin is secured.
11. Close and lock the saddlebag lid.

SADDLEBAG, REMOVAL / INSTALLATION (BOLTED)

IMPORTANT

Any time the saddle bag retaining bolts are removed, U-NUTS should be inspected for fatigue or damage. Damaged U-NUTS should be replaced before installing saddlebag(s), or saddlebag(s) may not attach securely to motorcycle.

Removal

1. Park the motorcycle on a flat surface, resting on the sidestand.
2. Locate and disconnect the saddlebag audio connector(s) ①.

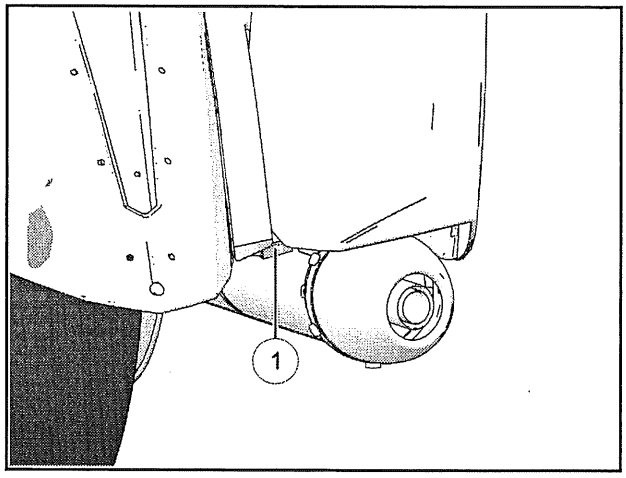

3. Open the saddlebag lid(s).
4. Remove the bolts ② securing the bag to the mounting bracket.

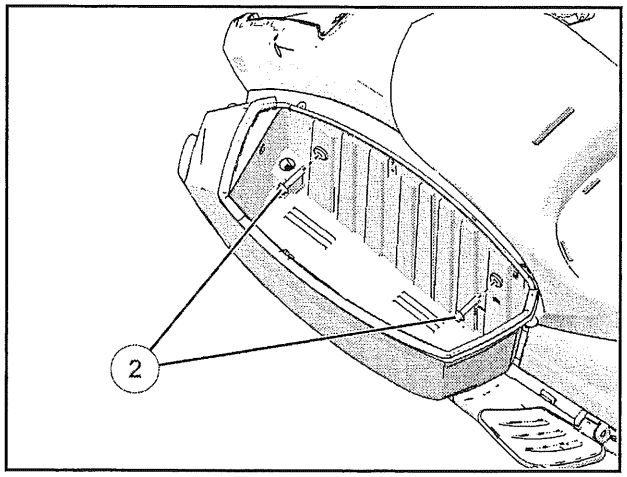

5. Lift bag(s) off of base mount.

Installation

6. Set bag onto the base mount and move into position so bolt holes are properly aligned.
7. Install mounting bolts and torque to specification.

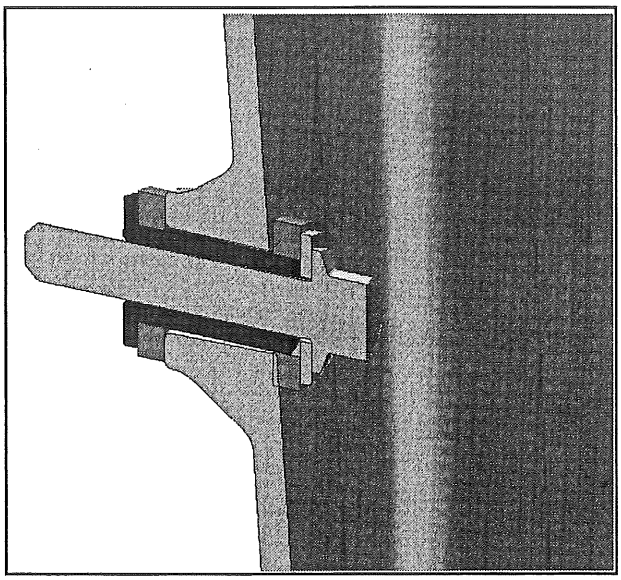

TORQUE
Saddlebag Mounting Bolts: **21 ft-lbs (29 Nm)**

8. Plug in audio harness connector(s).

SADDLEBAG SPEAKER, REMOVAL

1. Remove the six screws ① securing the speaker grill to the saddlebag lid.

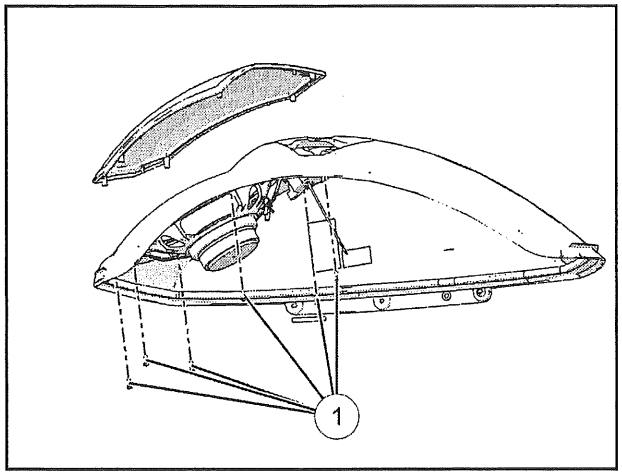

2. Remove the three screws ② securing the tweeter to the saddlebag lid.

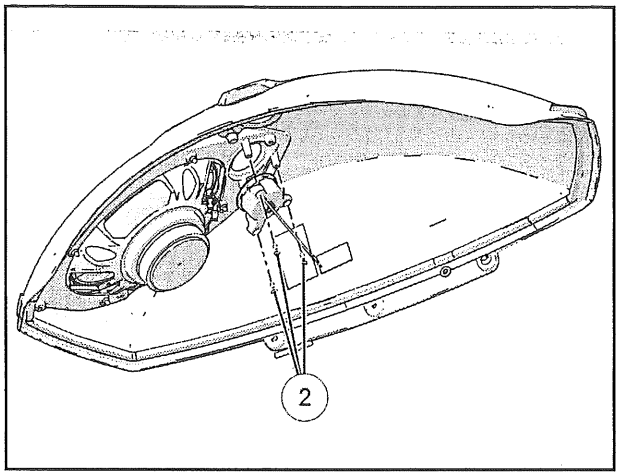

3. Remove the four screws ③ securing the speaker assembly to the saddlebag lid.

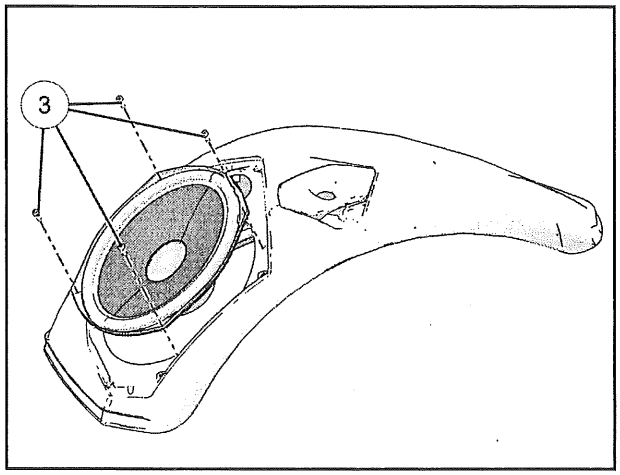

3

SADDLEBAG SPEAKER, INSTALLATION

1. Place the speaker assembly into position in the saddlebag lid and torque the four screws ① to specification.

TORQUE
Speaker Screws: **24 in-lbs (3 Nm)**

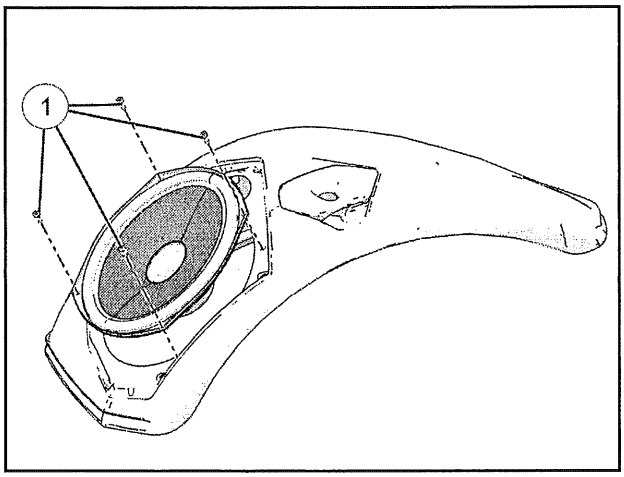

2. Place the tweeter in position under the saddlebag lid and torque the three screws ② to specification.

TORQUE
Tweeter Screws: **14 in-lbs (2 Nm)**

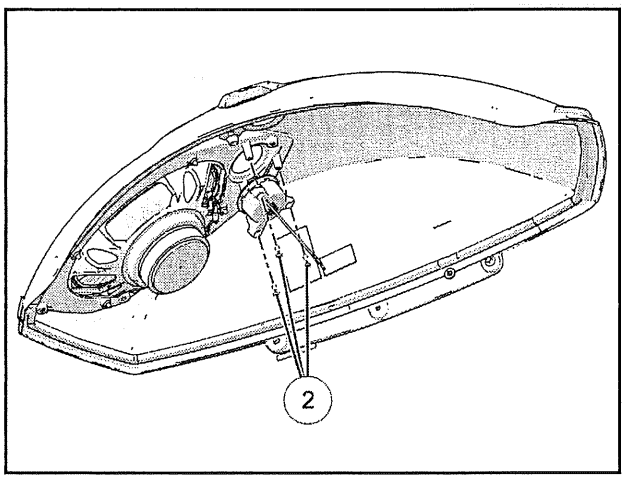

3. Install the speaker grill and six screws ③ and torque to specification.

TORQUE
Speaker Grill Screws: **14 in-lbs (2 Nm)**

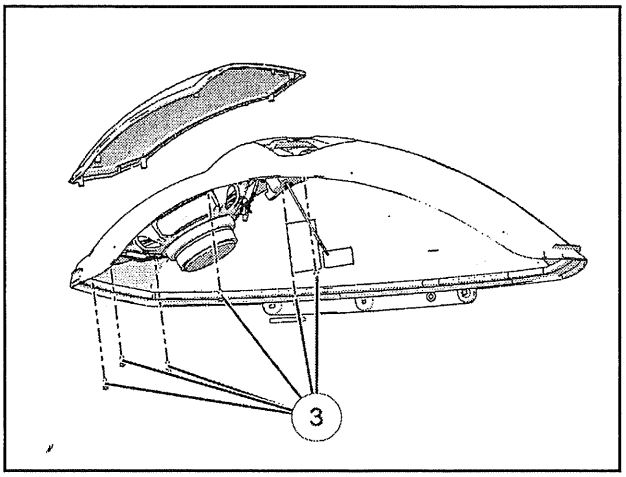

ANTENNA / ANTENNA MOUNT

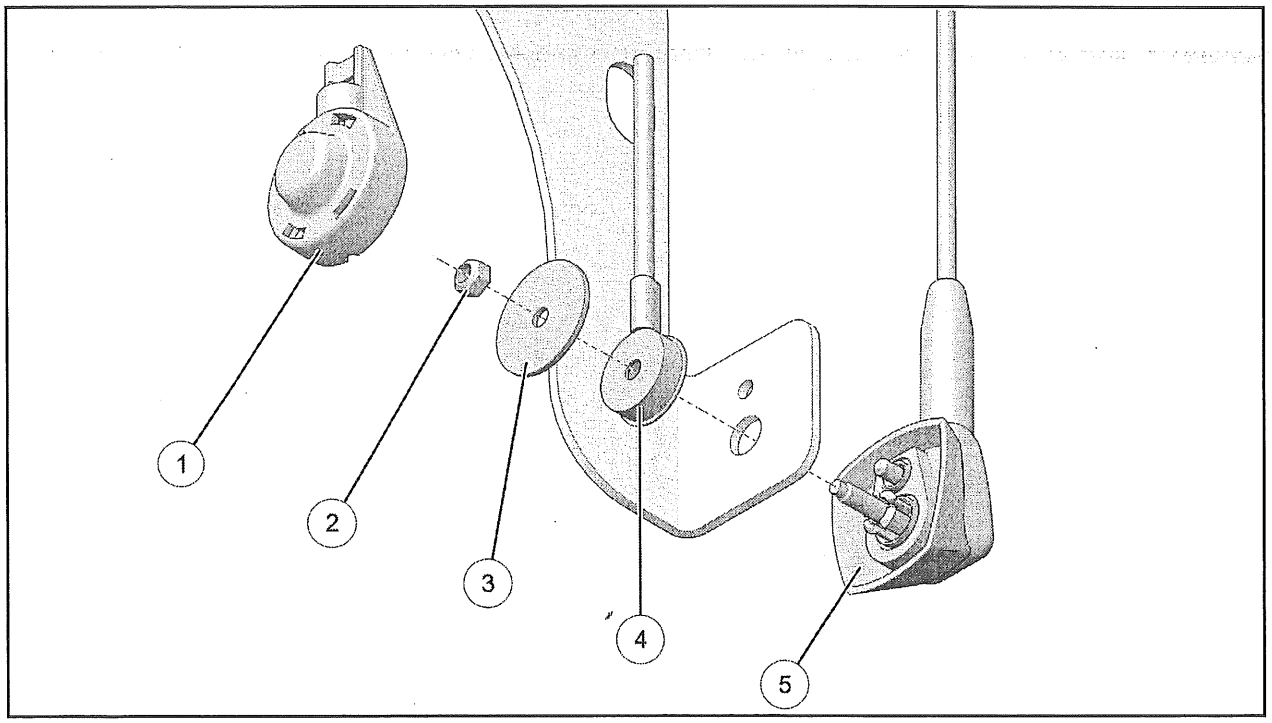

ITEM	DESCRIPTION	TORQUE	NOTES
①	Antenna Boot	—	—
②	Nut	25 in-lbs (3 Nm)	—
③	Washer	—	—
④	Antenna Harness	—	Assemble teeth against bracket and small hole against washer. Apply dielectric grease all around connection after tightening nut.
⑤	Antenna Base	—	—

SADDLEBAG ASSEMBLY VIEW (NON-AUDIO)

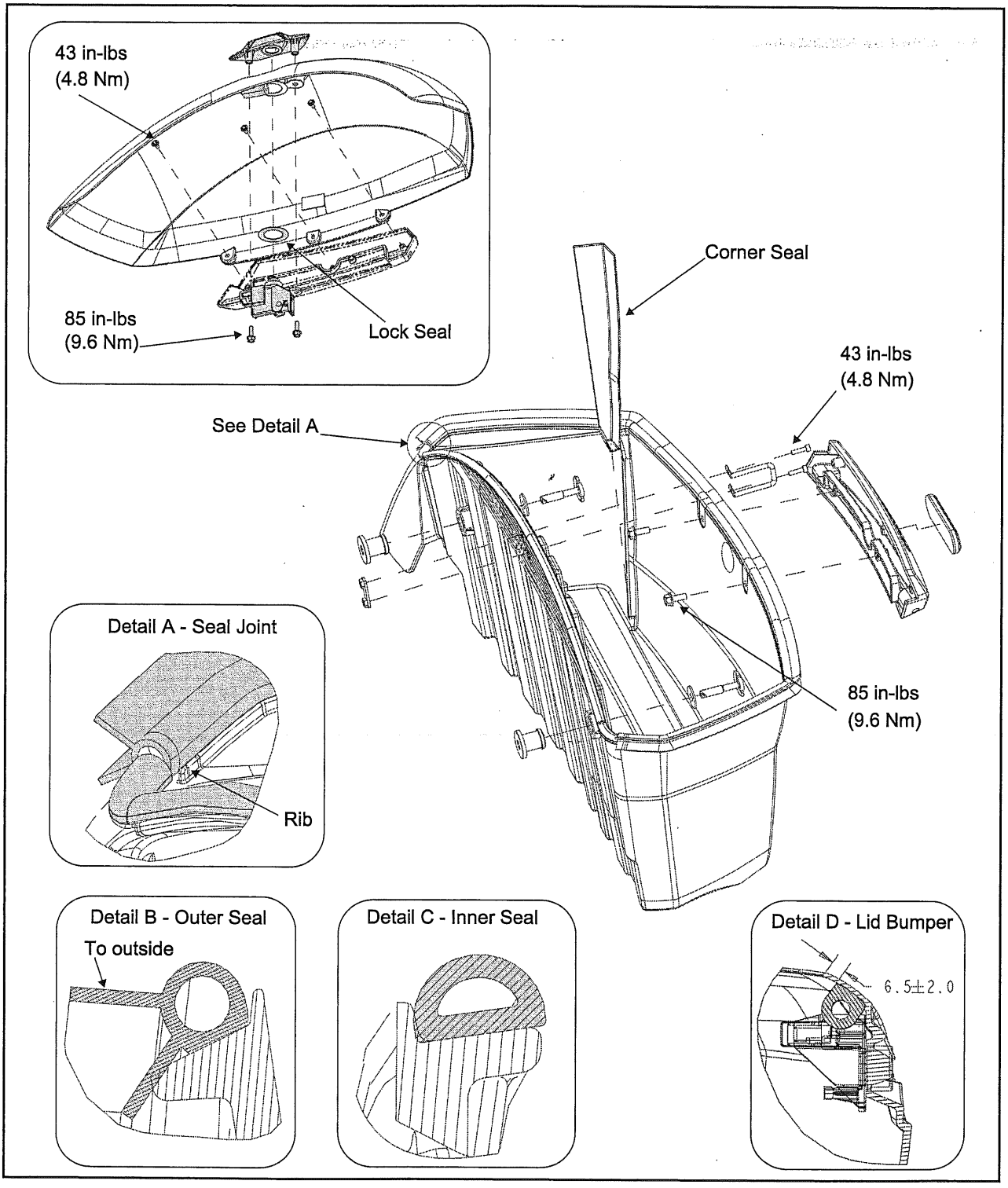

SADDLEBAG ASSEMBLY VIEW (MAGNUM X-1)

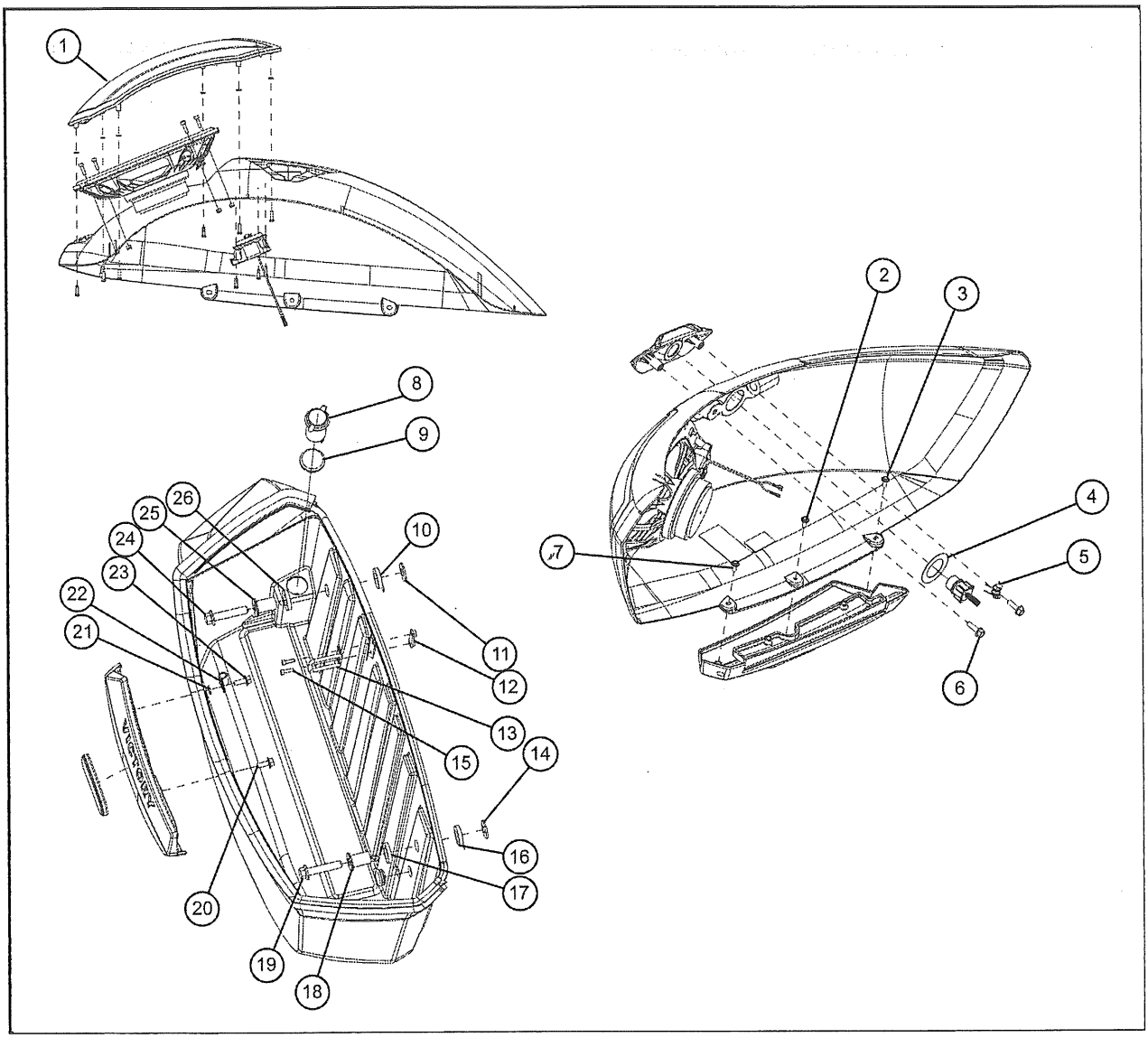

NUMBER	PART DESCRIPTION	TORQUE (IF APPLICABLE)
①	Grill, Saddlebag RH (QTY.1)	—
②	Screw -M5 x 0.8 x 12 (QTY.6)	43 in-lbs (5 Nm)
③	Screw -M5 x 0.8 x 12 (QTY.6)	43 in-lbs (5 Nm)
④	Seal, Saddlebag Lock (QTY.2)	—
⑤	Lock, Saddlebag (QTY.2)	—
⑥	Screw - M6 x 1.0 x 20 (QTY.4)	92 in-lbs (10 Nm)
⑦	Screw -M5 x 0.8 x 12 (QTY.6)	43 in-lbs (5 Nm)
⑧	12V Receptacle (QTY.1)	—
⑨	Grommet, 12V Powerlet (QTY.1)	—
⑩	Washer, Rubber (QTY.4)	—
⑪	Washer, Wrought - 3/8 (QTY.4)	—
⑫	Bracket, Hoop (QTY.2)	—
⑬	Hoop, Latch Striker (QTY.2)	—
⑭	Washer, Wrought - 3/8 (QTY.4)	—
⑮	Screw - M4 x 0.7 x 14 (QTY.12)	43 in-lbs (5 Nm)
⑯	Washer, Rubber (QTY.4)	—
⑰	Washer, Rubber (QTY.4)	—
⑱	Bushing, Saddlebag (QTY.4)	—
⑲	Screw - M10 x 1.5 x 50 (QTY.4)	21 ft-lbs (29 Nm)
⑳	Screw - M6 x 1.0 x 16 (QTY.4)	92 in-lbs (10 Nm)
㉑	Washer (QTY2)	—
㉒	Clamp, Rear Brake (QTY.4)	—
㉓	Screw - M6 x 1.0 x 16 (QTY.4)	92 in-lbs (10 Nm)
㉔	Screw - M10 x 1.5 x 50 (QTY.4)	21 ft-lbs (29 Nm)
㉕	Bushing, Saddlebag (QTY.4)	—
㉖	Washer, Rubber (QTY.4)	—

REAR FENDER / SADDLEBAG MOUNT

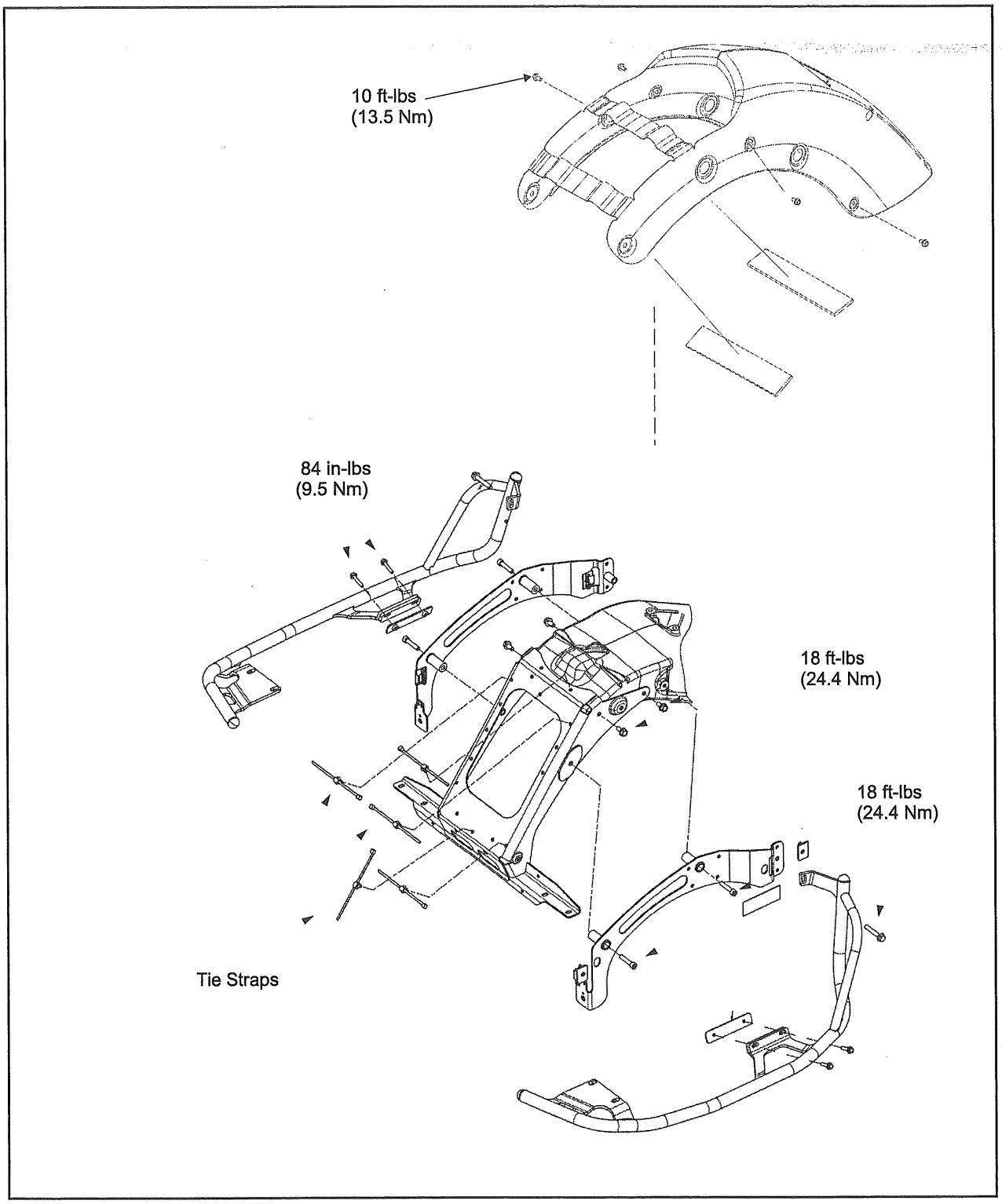

REAR FENDER (MAGNUM)

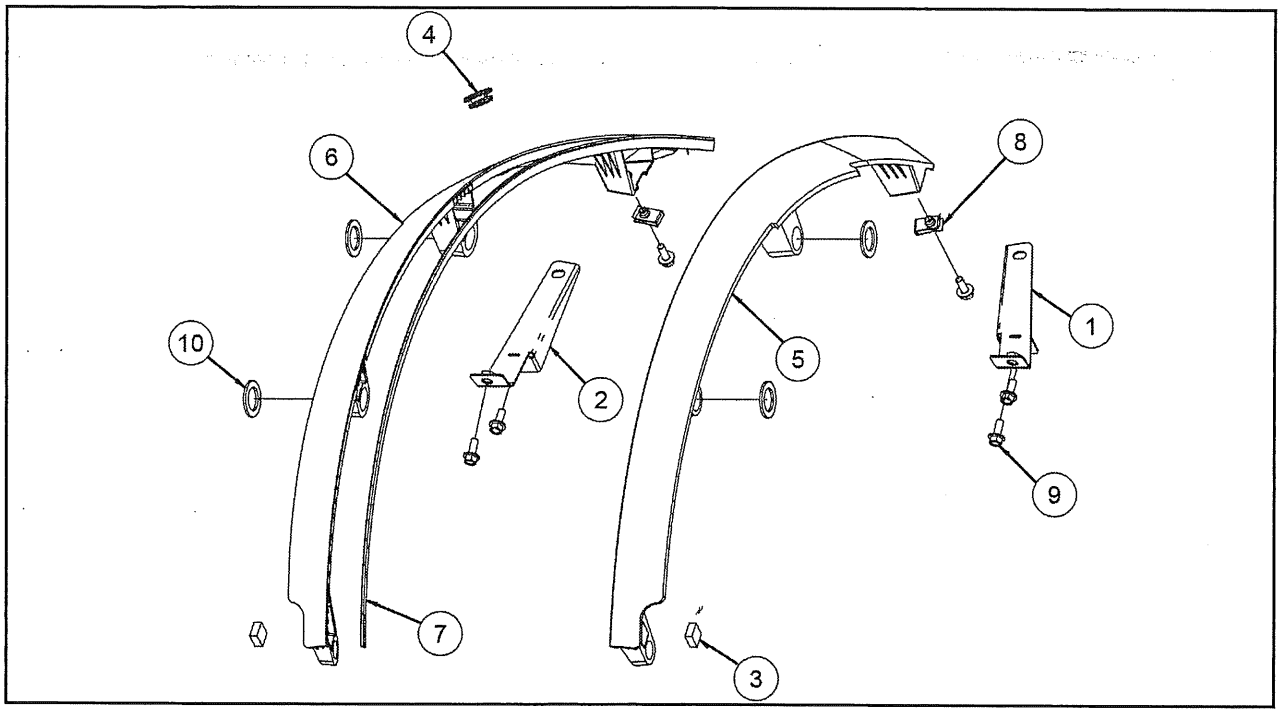

① Bracket, Fender Closeout (left)	⑥ Closeout, Rear Fender (right)
② Bracket, Fender Closeout (right)	⑦ Seal, Foam
③ Rubber Pad	⑧ Clip, Speed Nut
④ Grommet	⑨ Screw — M6 x 1 x 16
⑤ Closeout, Fender (left)	⑩ Washer, Pivot Footpeg

TRUNK

Removal

1. Remove saddlebags.
2. Remove left hand side cover.
3. Locate left and right trunk lock bolts (1 per side) and remove.

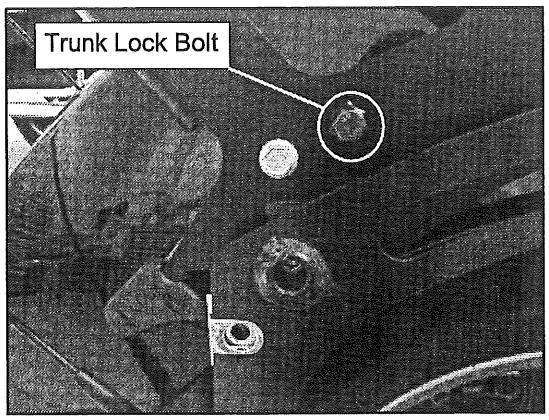

4. Lift trunk lock levers (1 per side) to release trunk from mounting bracket.

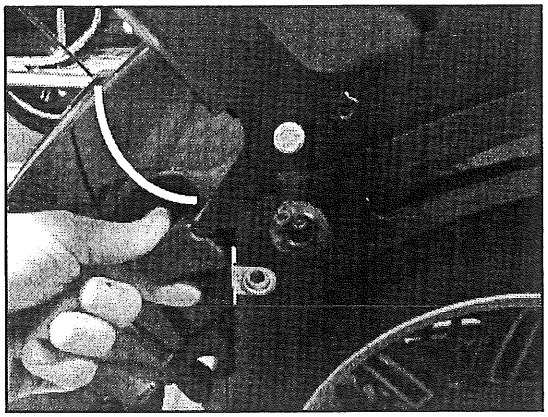

5. Working from the left side of motorcycle, locate cable ties (2) securing trunk wire harness to bracket and remove.

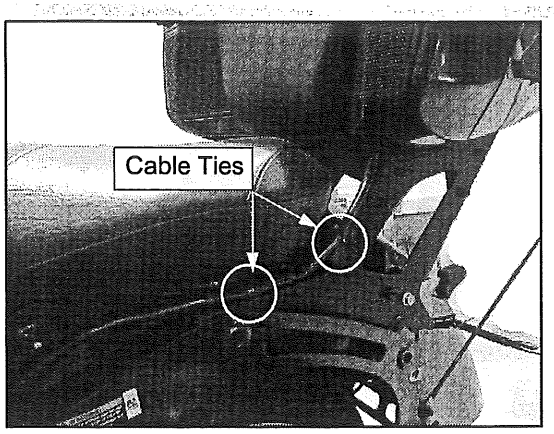

6. Locate trunk wire harness multi-plug tucked beneath seat and disconnect.

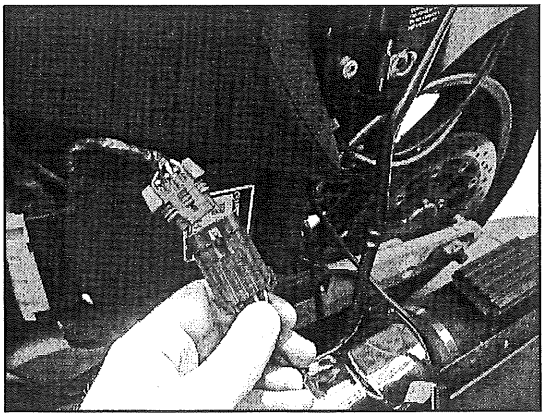

7. Starting from the back, lift trunk (A) to disengage trunk locks from mounting bracket, and slide towards rear of motorcycle (B) to remove trunk assembly.

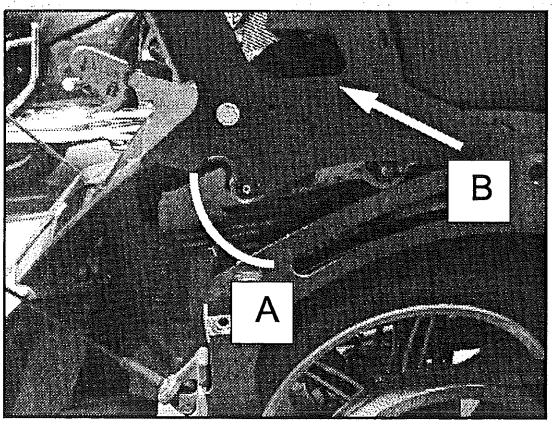

Installation

8. Reverse procedure to install.

NOTE
Secure wire harness with cable ties.

TRUNK ASSEMBLY VIEW / MOUNT

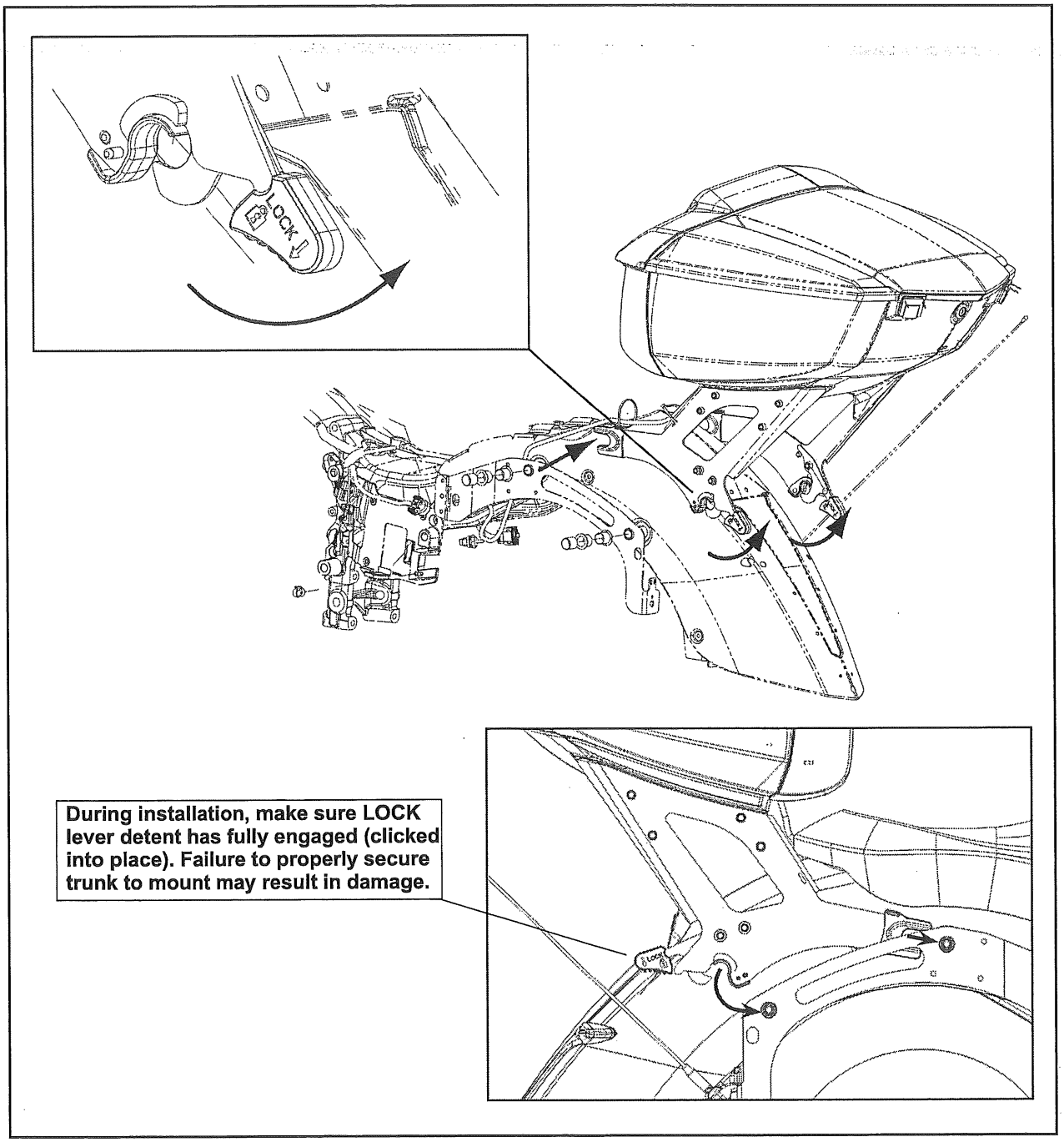

TAIL LIGHT / TURN SIGNAL ASSEMBLY VIEW

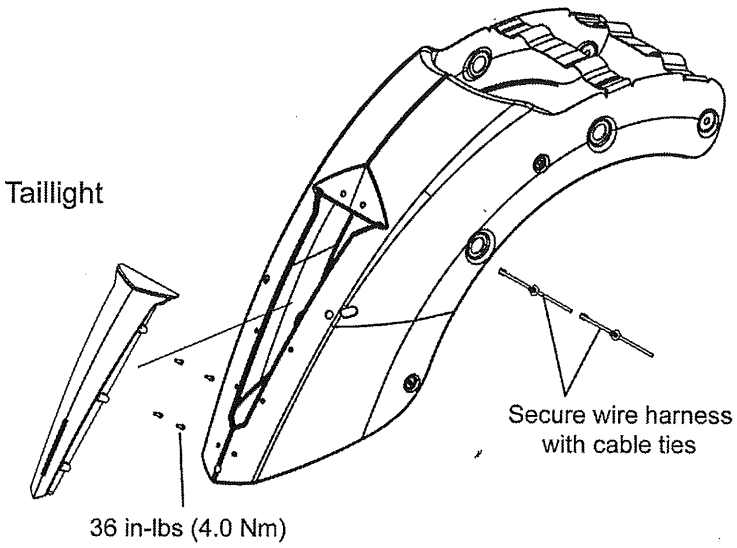

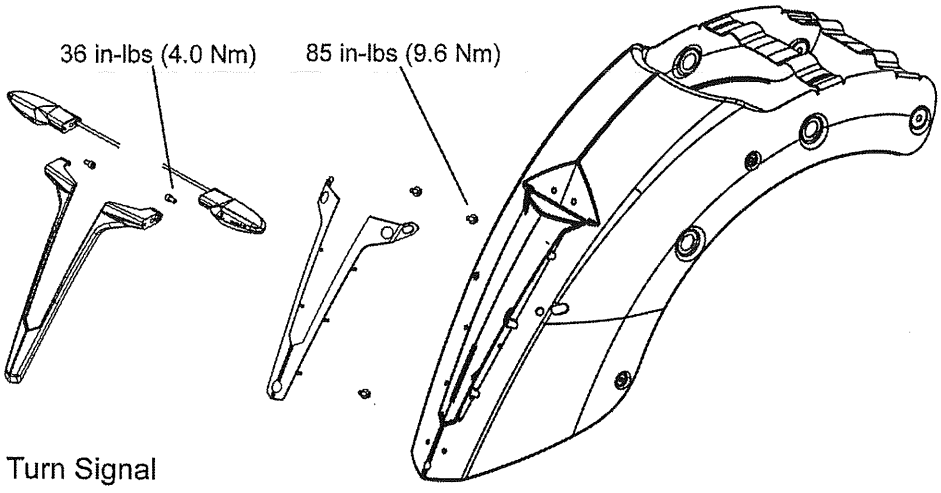

FLOORBOARD / FOOT CONTROL MOUNTING

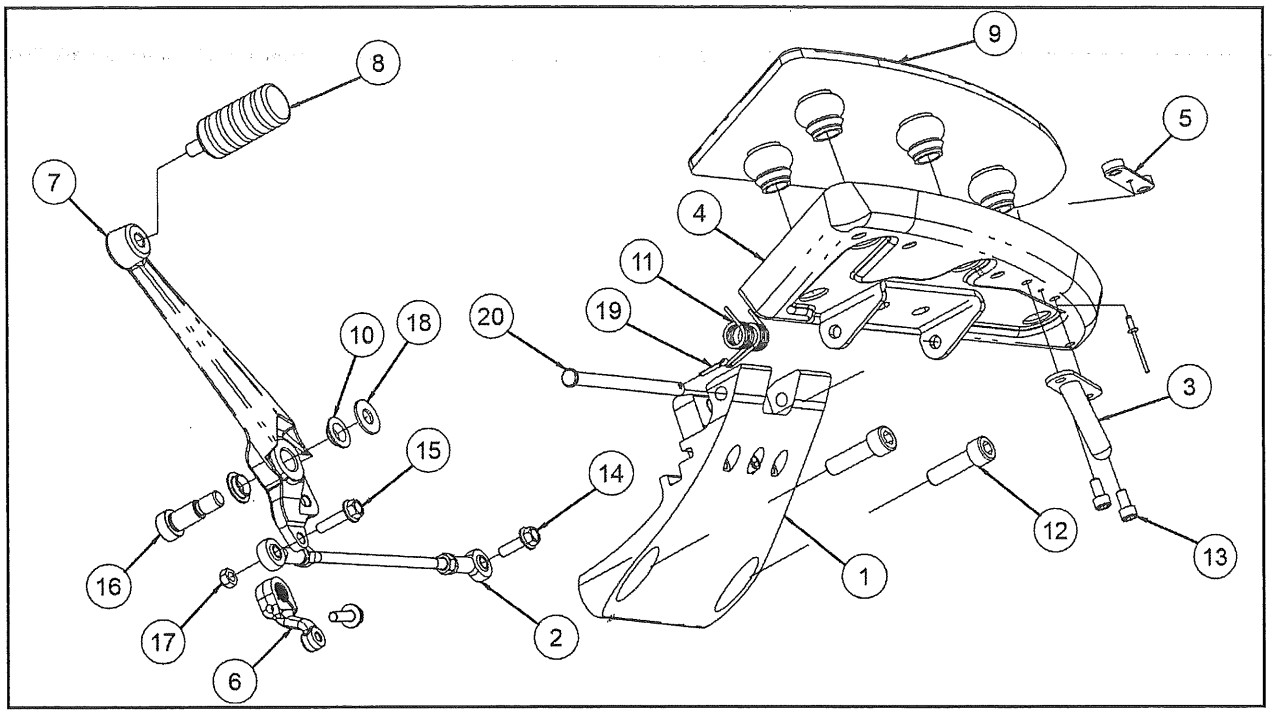

SHIFT SIDE	
① Floorboard Support (left)	⑪ Spring — Floorboard Support
② Shifter	⑫ Screw
③ Weld — Feeler, Floorboards (Magnum models only)	⑬ Screw
④ Weld — Driver, Floorboards (left)	⑭ Screw
⑤ Bracket, Feeler	⑮ Screw
⑥ Lever, Machined Shifter	⑯ Screw
⑦ Pedal, Machined Shifter Lever	⑰ Nut
⑧ Brake, Shifter Peg	⑱ Washer
⑨ Pad — Driver Floorboard (left)	⑲ Pin — Cotter
⑩ Bushing	⑳ Pin — Floorboard Support

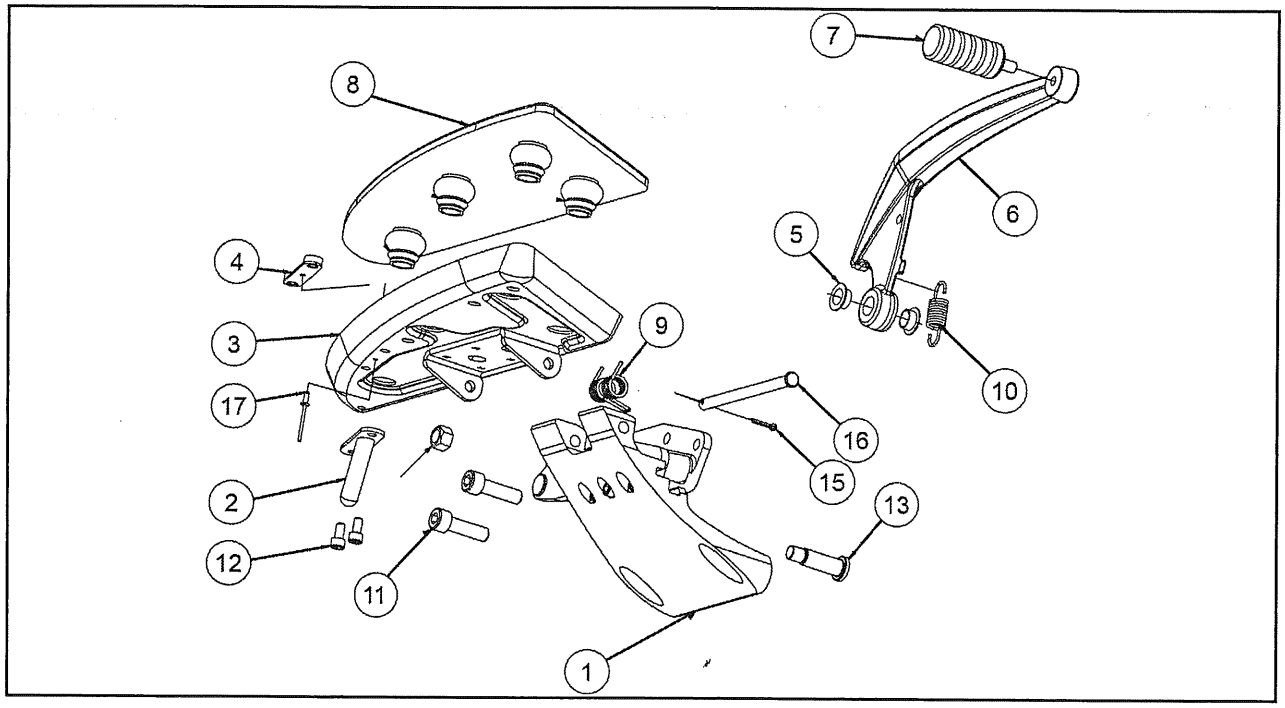

BRAKE SIDE	
① Floorboard Support	⑩ Spring — Extension, Brake, Return
② Weld — Feeler, Floorboards (Magnum models only)	⑪ Screw
③ Weld — Driver, Floorboard (right)	⑫ Screw
④ Feeler Bracket	⑬ Screw — Brake Pivot
⑤ Bushing — Pedal	⑭ Nut — Hex
⑥ Pedal — Machine Brake Lever	⑮ Pin — Cotter
⑦ Brake, Shifter Ped	⑯ Pin — Floorboard Support
⑧ Pad — Driver Floorboard (right)	⑰ Rivit
⑨ Spring — Support, Floorboard	

PASSENGER FOOTREST MOUNTING

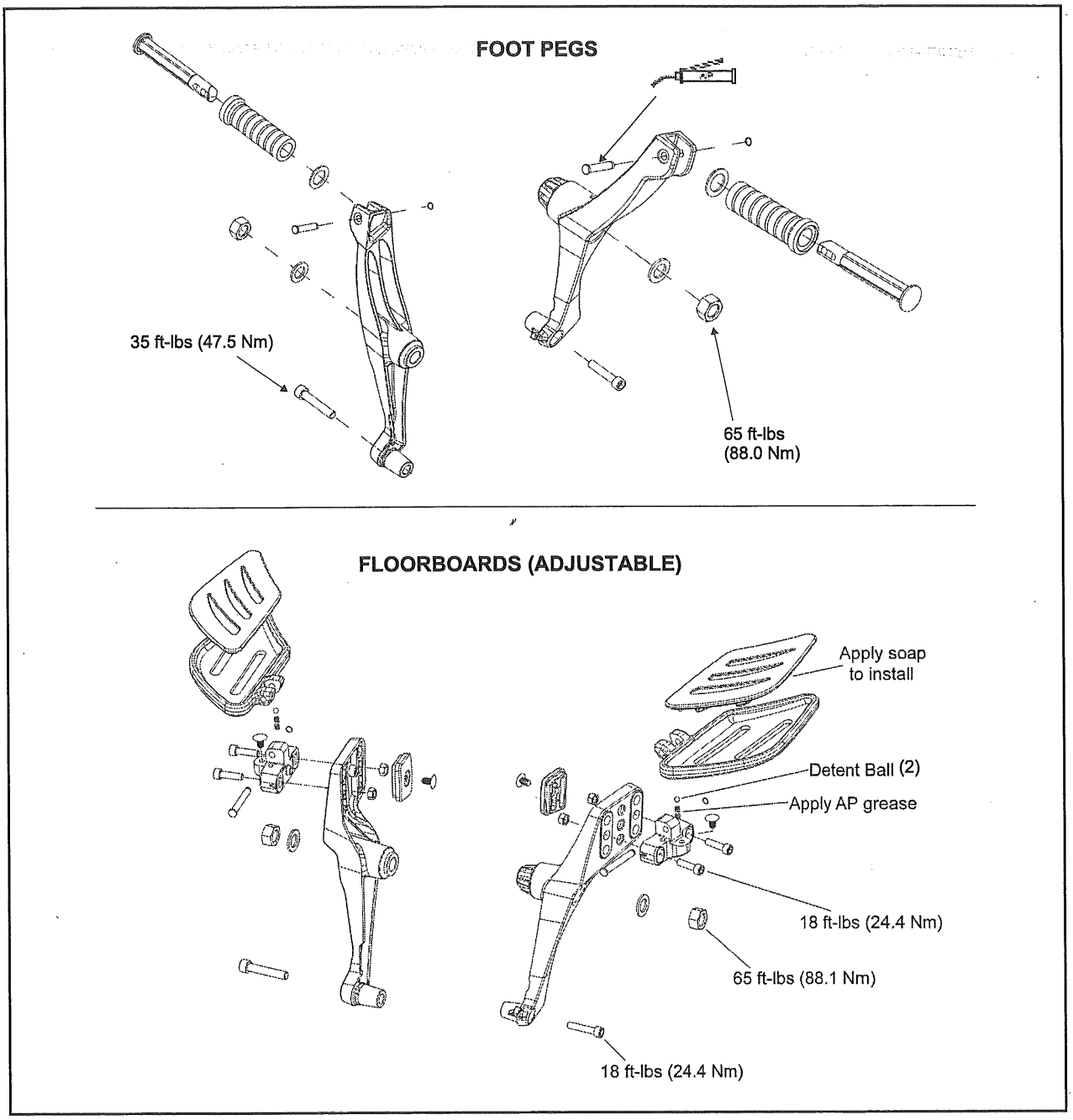

PASSENGER FLOORBOARDS (ADJUSTABLE)

Removal

1. Remove bolt (1 per side) and nut (1 per side) securing floorboard assembly to chassis as shown.

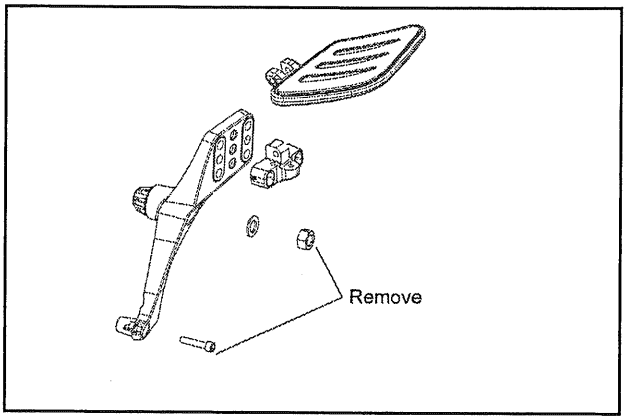

Installation

2. Reverse procedure to install. Torque as shown.

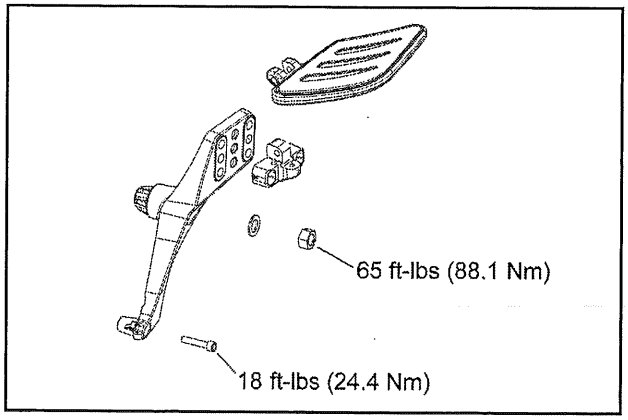

Adjustment (Height)

3. Remove floorboard adjustment bolts (2 per side) from slotted holes.

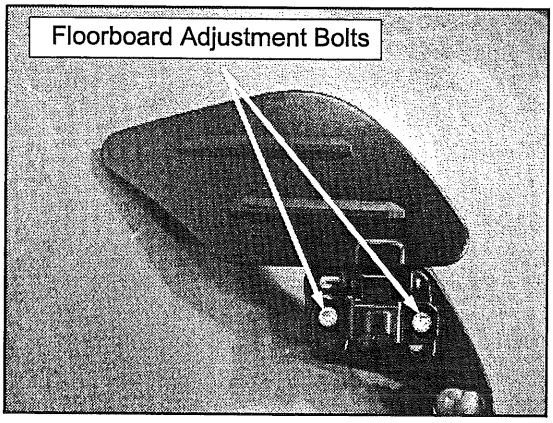

4. Select the desired position from one of the 3 available height settings and torque floorboard adjustment bolts to specification.

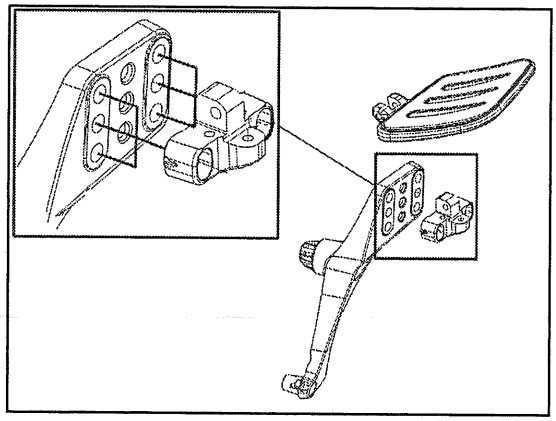

TORQUE
Floorboard Adjustment Bolts: **18 ft-lbs (25 Nm)**

Adjustment (Angle)

5. Loosen floorboard adjustment bolts (2 per side) in slotted holes, and rotate floorboard to desired position.

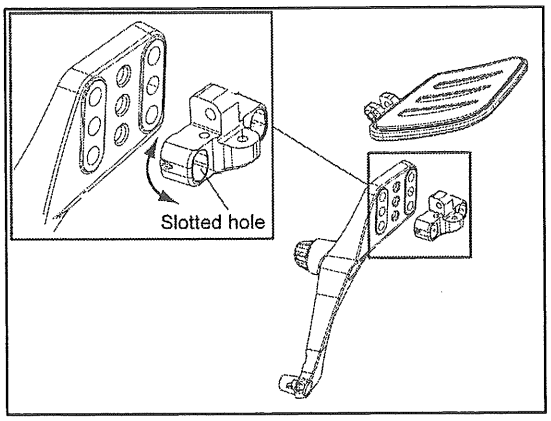

6. Tighten floorboard adjustment bolts to specification.

TORQUE
Floorboard Adjustment Bolts: **18 ft-lbs (25 Nm)**

EXHAUST SYSTEM

ASSEMBLY VIEW - EXHAUST COMPLETE

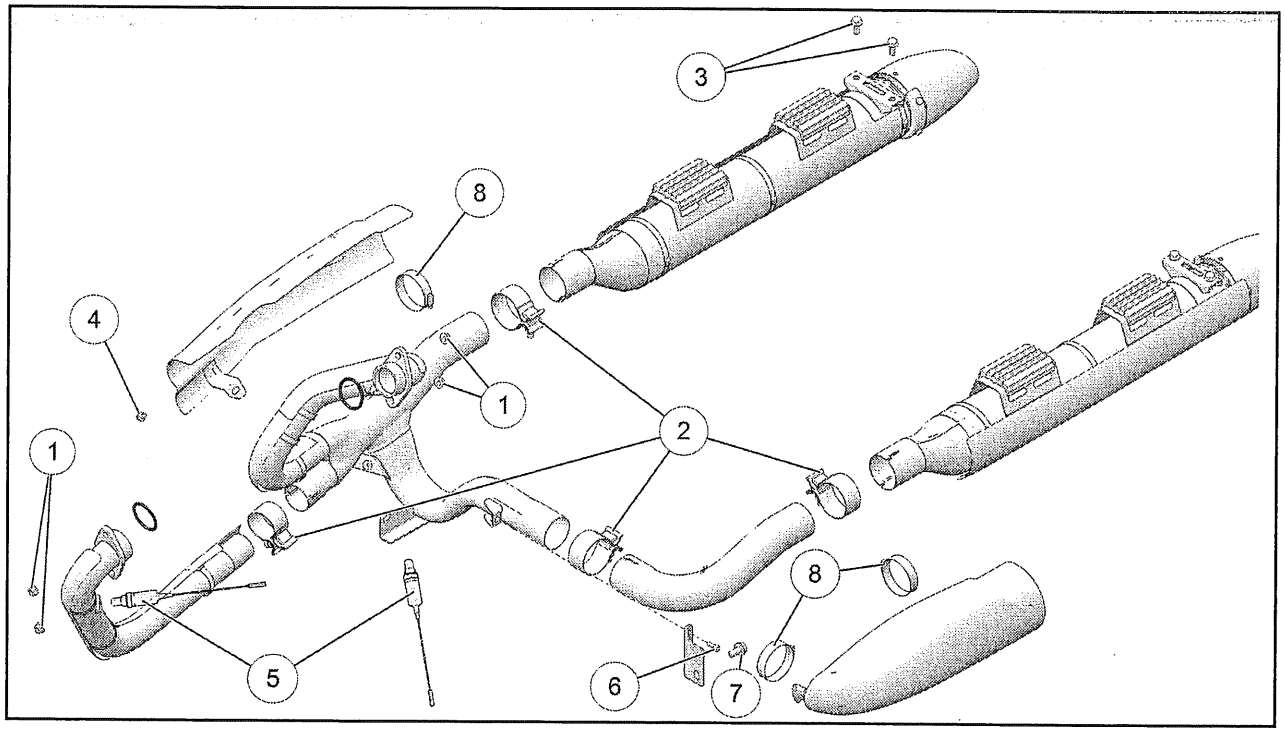

ITEM	DESCRIPTION	TORQUE	NOTES
①	Head Pipe Nuts	12 ft-lbs (16.3 Nm)	—
②	Clamp	40 ft-lbs (54.0 Nm)	Loosen 4–5 turns then lift screw to release
③	Muffler Screws	18 ft-lbs (24.4 Nm)	—
④	Shield Screw	96 in-lbs (10.8 Nm)	—
⑤	O2 Sensor	35 ft-lbs (47.5 Nm)	Apply anti-seize lubricant
⑥	Exhaust Mount Bracket Screw	96 in-lbs (10.8 Nm)	—
⑦	Exhaust Mount Bracket Bolt	35 ft-lbs (47.5 Nm)	Apply anti-seize lubricant
⑧	Worm Drive Clamp	36 in-lbs (4.0 Nm)	—

ASSEMBLY VIEW – MUFFLER

MUFFLER REMOVAL

1. Remove saddlebags.
2. Remove rear bolts (A).
3. Remove shield clamps (B). (See clamp detail below).
4. Move end of muffler to loosen joint.
5. Remove muffler.

MUFFLER INSTALLATION

1. Install muffler with clamp to head pipe or crossover pipe.
2. Loosely install rear bolts (A) and draw muffler level with bracket. Do not tighten.
3. Rotate clamps to proper position and torque fastener.
4. Torque rear bolts.
5. Install shields and torque clamps and fastener (right side).

NOTE: Left muffler can be removed complete with shield attached by loosening crossover pipe clamp (C) and removing muffler with crossover pipe.

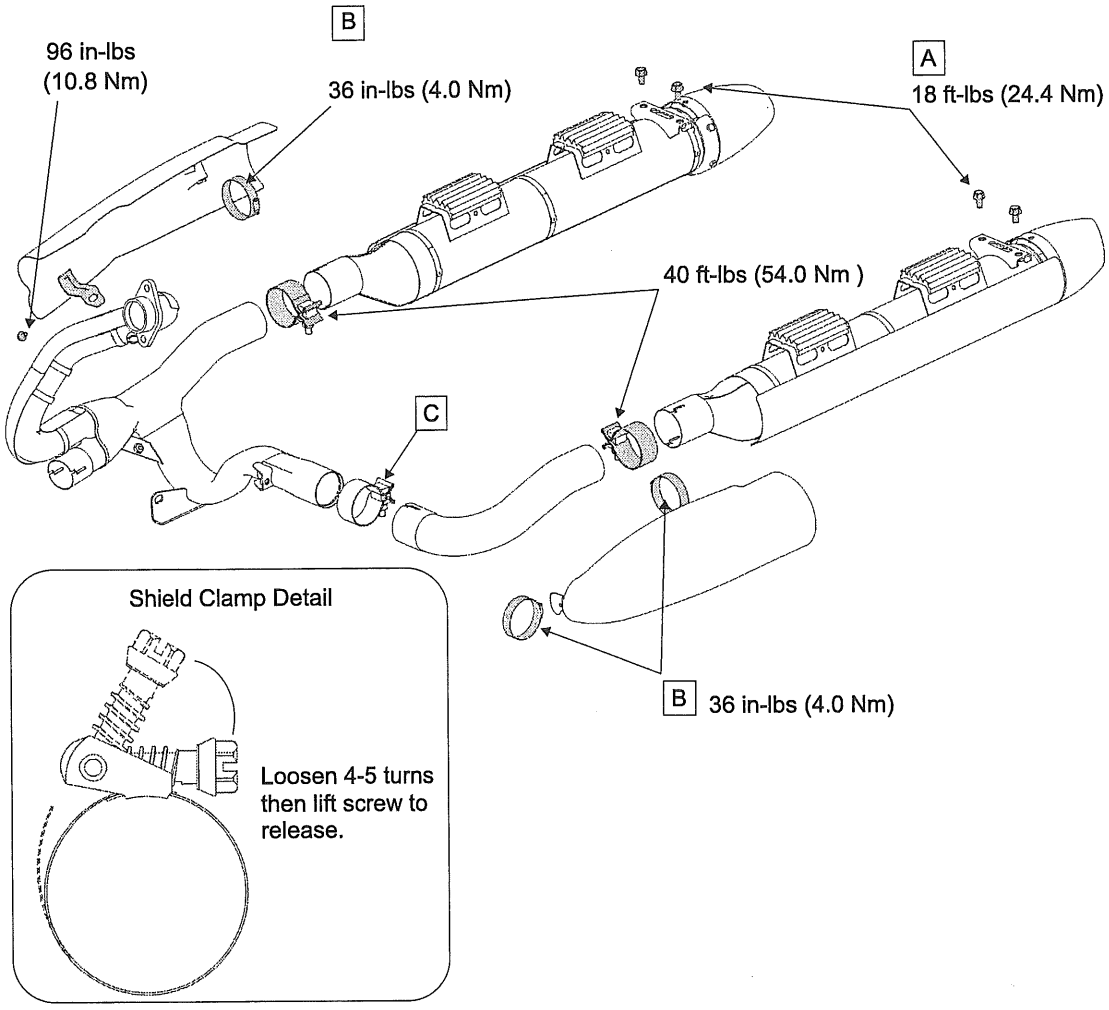

ASSEMBLY VIEW – HEAD PIPES

HEAD PIPE REMOVAL

1. Remove saddlebags and mufflers.
2. Remove right passenger footrest bracket fasteners. (Page 3.27).
3. Remove screw (A) from left side of bracket.
4. Remove screw (B) from left side of bracket.
5. Loosen front head pipe clamp (C).
6. Remove rear flange nuts (D).
7. Pull outward and downward on rear head pipe to loosen joint (E).
8. Remove front flange nuts (F).
9. Disconnect oxygen sensors at the connector. Do not attempt to remove the sensor wire at the sensor.
10. Remove head pipe with rear passenger footrest bracket.

HEAD PIPE INSTALLATION

1. Install new gaskets and assemble head pipe loosely to engine with the passenger footrest bracket.
2. Start screws A and B to roughly align head pipe bracket. Do not tighten.
3. Tighten front flange nuts (F) then tighten rear (D). Be sure bracket is in contact with engine case in area (B) BEFORE tightening head pipe flange nuts.
4. Tighten screw (B) then (A) to specification.
5. Tighten clamp (C) to specification.
6. Connect oxygen sensors and install mufflers.
7. Clean any oil residue from entire exhaust system.
8. Start engine and inspect for leaks. Install saddlebags.

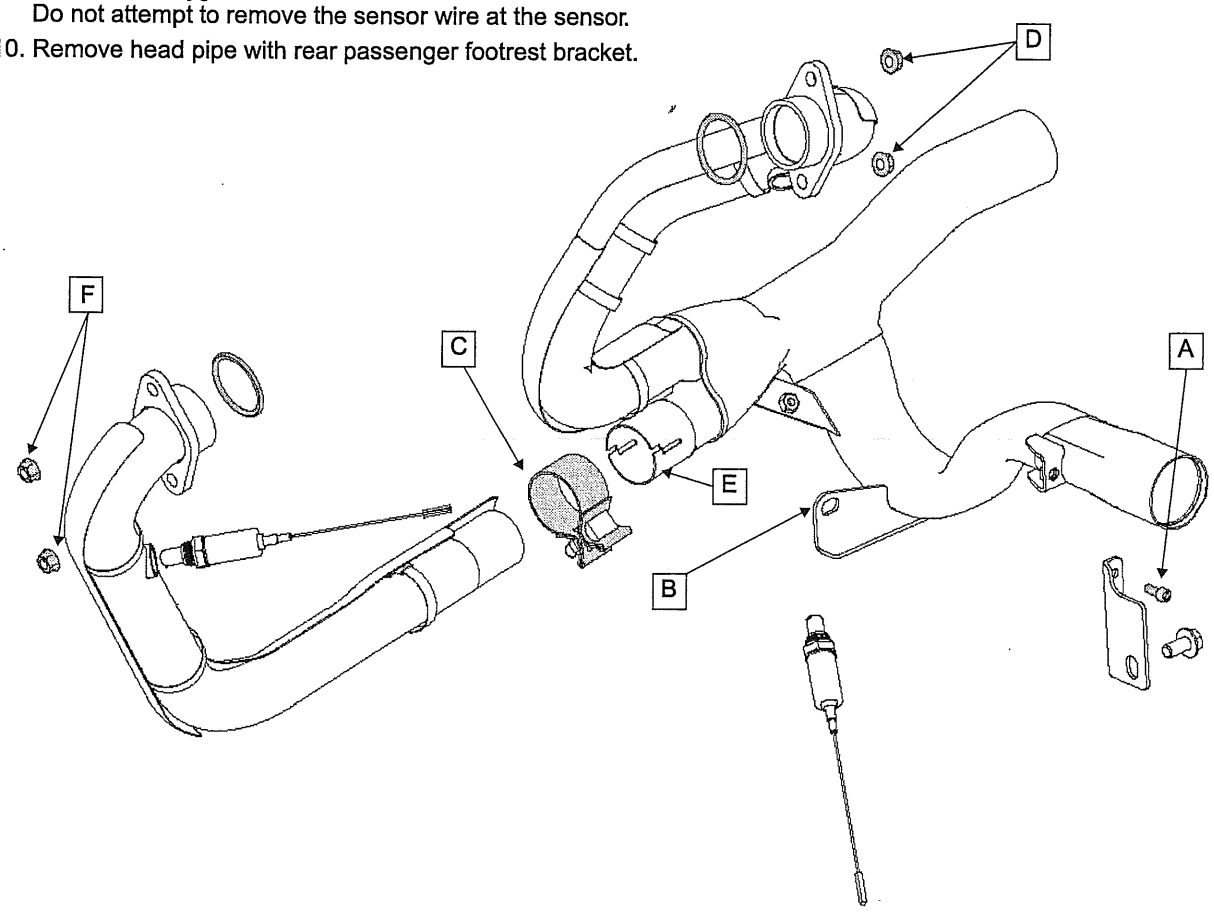

CHAPTER 4
LUBRICATION / COOLING

OILING SYSTEM 4.2
OPERATION 4.2
TROUBLESHOOTING 4.2
SPECIAL TOOLS 4.2
OILING SYSTEM DATA 4.3
LUBRICATION & COOLING SYSTEM SPECIFICATIONS 4.3
OIL FLOW 4.4
DIAGRAM 4.4
OIL COOLER 4.5
ASSEMBLY VIEW - OIL COOLER AND LINES 4.5
OIL COOLER INSPECTION / CLEANING 4.6
OIL COOLER / OIL LINE REMOVAL 4.6
OIL COOLER / OIL LINE INSTALLATION 4.6
OIL PRESSURE INSPECTION 4.7
LUBRICATION OIL PRESSURE 4.7
COOLING OIL FLOW INSPECTION 4.7
OIL PUMP 4.9
OIL PUMP REMOVAL 4.9
OIL PRESSURE RELIEF VALVES 4.11
OIL PUMP INSPECTION 4.12
OIL PUMP DISASSEMBLY 4.13
OIL PUMP ASSEMBLY 4.14
OIL PUMP INSTALLATION 4.16

OILING SYSTEM

OPERATION

For safety, read, understand and follow the warnings/cautions contained in this section.

To perform some of the procedures in this section, the engine must be running.

The oil pump has two sets of internal gerotors. One set provides lubrication pressure and the second set provides cooling oil pressure. A separate pressure relief valve is located on the oil pump for each oiling system.

To access the oil pump, the engine must be removed from the frame and disassembled. Before disassembly, review the troubleshooting charts located in this chapter.

If the engine is making irregular noises that appear to be coming from rotating parts, check the lubrication side oil pressure. Check the oil pressure before engine disassembly, and recheck the oil pressure after a repair.

Cooling oil pressure troubleshooting is done by verifying cooling oil flow, not cooling oil pressure. For more information, see oil pressure testing on Cooling Oil Flow Inspection, page 4.7.

⚠ WARNING

DO NOT loosen any oil line connections with the engine running, or within 30 minutes of operation. Oil inside the lines could be under pressure.

⚠ WARNING

Never run an engine in an enclosed area. Exhaust contains poisonous carbon monoxide gas that can cause loss of consciousness or death. Operate the engine in an open area or with an exhaust evacuation system connected and functioning properly.

⚠ WARNING

The engine components, oil and exhaust system become hot during operation and remain hot for a period of time after the engine is shut off. Wear eye protection and heat-resistant garments for hands and arms if working on a hot engine or wait until the components have cooled sufficiently before working on the machine.

TROUBLESHOOTING

LOW OIL PRESSURE	HIGH OIL PRESSURE
Incorrect oil being used or low oil level	Incorrect oil being used
Engine temp above test temperature range	Additives added to oil to increase viscosity
Damaged O-rings or leaks at pipes or fittings	Engine temp below test temperature range
Damaged or worn oil pump or oil pump drive	Restricted oil passages
Pressure relief valve stuck open	Incorrect oil filter
Damaged engine bearings/excessive engine wear.	Pressure relief valve stuck closed
Restricted oil filter, oil filter screen or passages	

SPECIAL TOOLS

SPECIAL TOOL	PART NUMBER
Oil Pressure Gauge	PV-43531
Moly Assembly Paste	2871460
5mm Ball Drive Allen Socket	(commercially available)

OILING SYSTEM DATA

LUBRICATION & COOLING SYSTEM SPECIFICATIONS

ITEM		STAND-ARD	SERVICE LIMIT
Engine Oil Capacity (After Disassembly)		4.75 Liters (5.0 U.S. qts)	Not Applicable
Engine Oil Capacity (At Change) Fill to full line with the engine at operating temperature.		Approx. 4.25 Liters (4.5 U.S. qts)	Not Applicable
Recommended Engine Oil If Victory 20W/40 is not available, use motorcycle oil suitable for wet clutches (such as those with JASO MA rating). DO NOT use additives of any kind.		Victory 20W/40 for all operating tempera-tures.	Not Applicable
Oil Pressure @ 3000 rpm (Lubrication System) **Measurements must be taken with engine at operating temp (82°C/ 180°F) and specified Victory Engine Oil**		552 kPa (80 psi)	within 20% of the specifica-tions. Minimum Pressure 276 kPa (40 psi)
Oil Pressure (Cooling System)		No measure-ment. See Lubrication Oil Pressure, page 4.7.	-
Oil Pump Clearances	Rotor Tip Clearance	0.12 mm (.005")	0.18 mm (.007")
	Pump Body Clearance	0.10 mm (.004")	0.26 mm (.010")
	Pump End Clearance	0.025 mm (.001")	0.10 mm (.004")
	Cooling Rotor Width	14.96 mm (.5889")	14.90 mm (.5866")
	Lubrication Rotor Width	9.99 mm (.3933")	9.90 mm (.3897")
	Shaft End Play (Check assembly of pump if excessive)	2.0 mm (.080")	+ 0.5 mm (.020")

Fastener Torque Specifications

DESCRIPTION	TOR-QUE NM	TOR-QUE FT-LBS (IN-LBS)
Cylinder Head Temperature Sensor - (CHT) - (Install new if removed)	14	10 ft-lbs
Oil Cooler Lower Support Bracket	14	(120 in-lbs)
Oil Drain Plug	20	15 ft-lbs
Oil Filter - apply oil to filter O-ring	8	(71 in-lbs)
Oil Filter Nipple (threaded fitting to crankcase)	61	45
Oil Line to Crankcase	10	(85 in-lbs)
Oil Lines to Cooler	10	(85 in-lbs)
Oil Pressure Relief Valves	6	20 ft-lbs
Oil Pressure Sensor Loctite™ 565 or pipe sealant	13	(115 in-lbs)
Oil Pump to Crankcase / Oil Tube to Crankcase	10	(85 in-lbs)
Oil Pump Sprocket	10	(85 in-lbs)

OIL FLOW

DIAGRAM

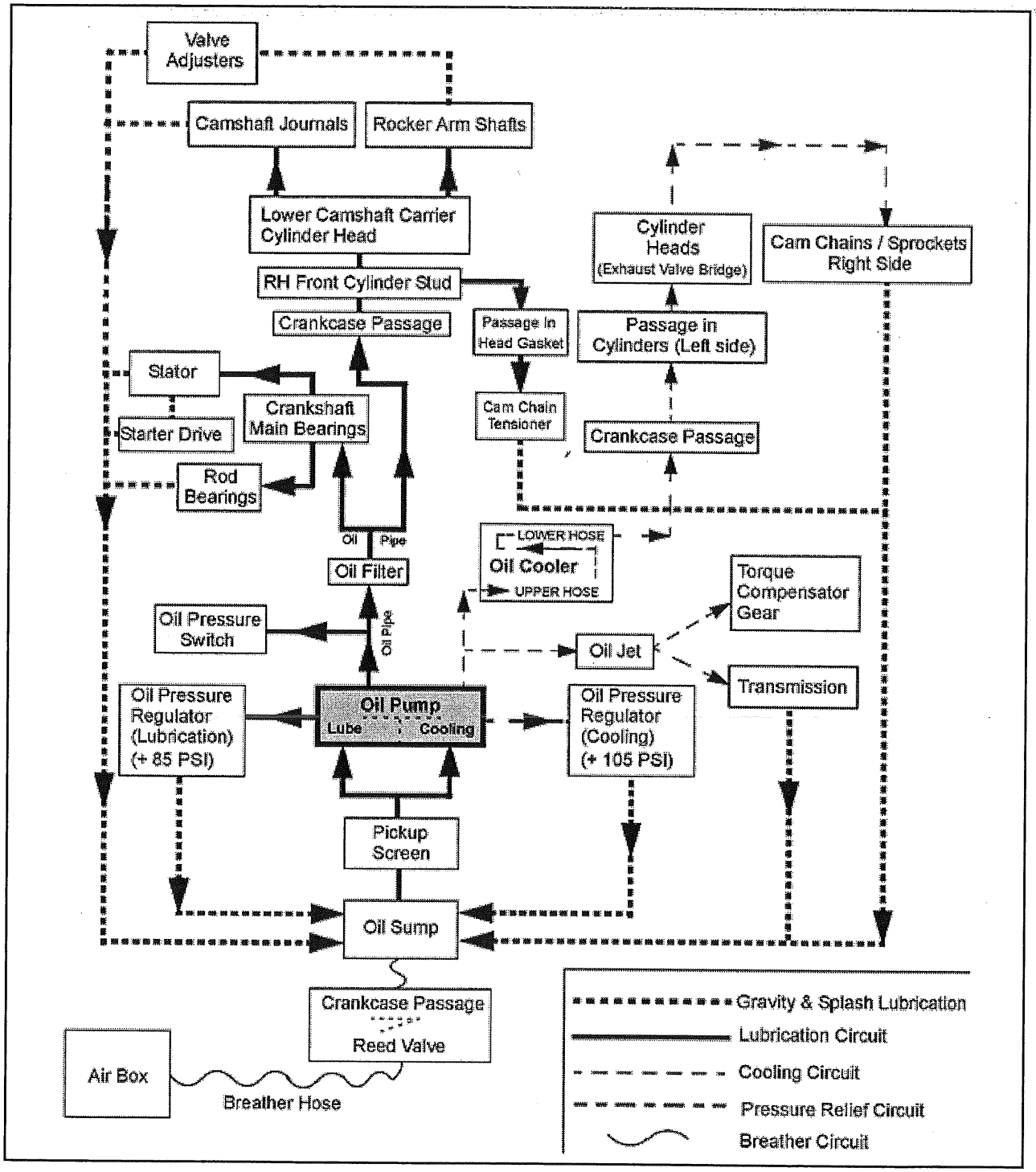

OIL COOLER

ASSEMBLY VIEW - OIL COOLER AND LINES

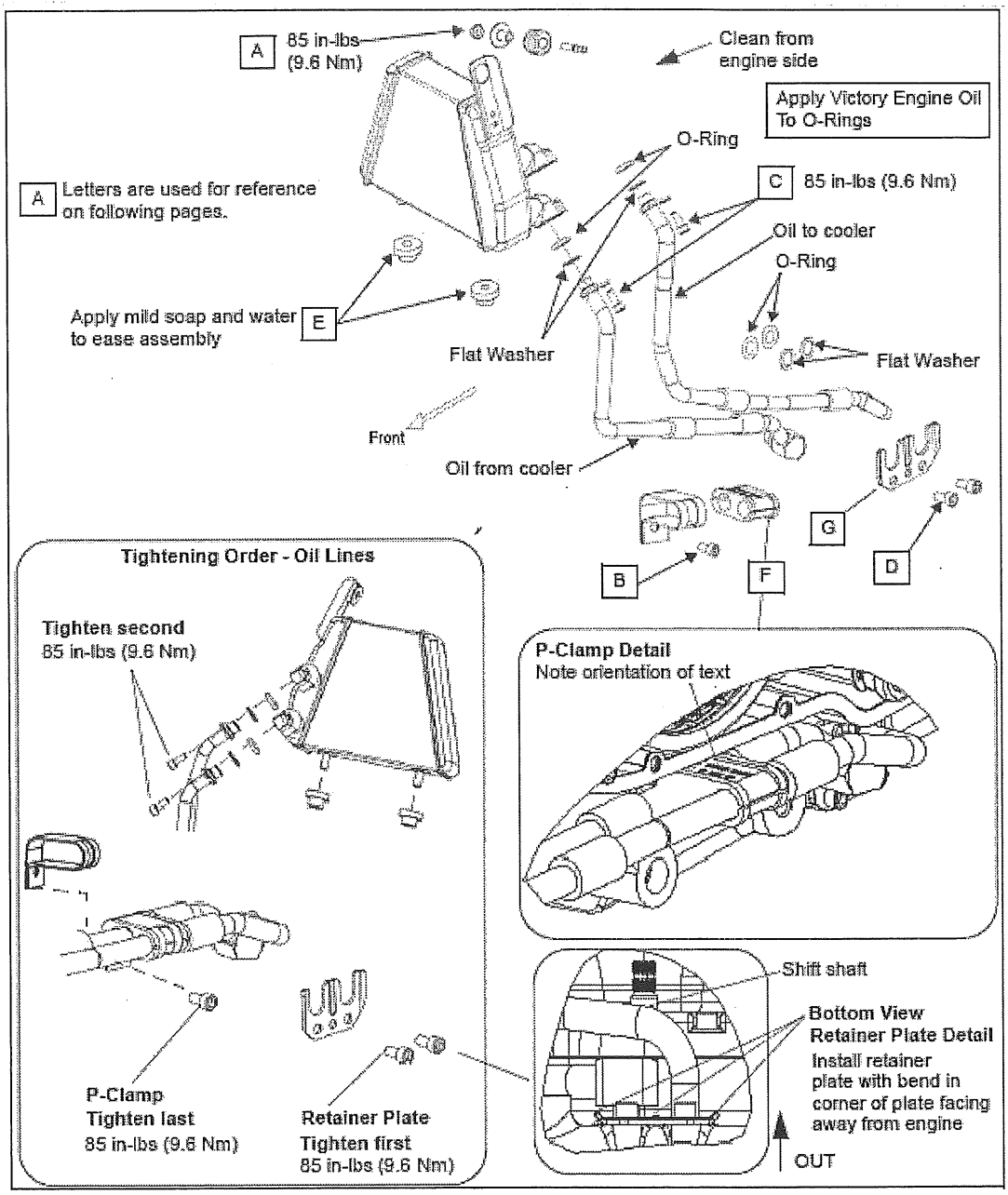

4

OIL COOLER INSPECTION / CLEANING

1. Inspect cooler, lines, and all connections for leaks.
2. Inspect lines for proper routing. Replace if there is any sign of abrasion or damage.
3. Inspect cooler surface for obstructions or debris.
4. Rinse from engine side with low pressure water.
5. Inspect oil cooler fins for deformation. Fins can be straightened if not severely deformed and no oil leaks are present.
6. Inspect cooler mounting fastener for proper torque. Inspect mounting bracket and rubber grommets for cracks or damage (Assembly View - Oil Cooler And Lines, page 4.5).

OIL COOLER / OIL LINE REMOVAL

1. Place drain pan beneath oil lines.
2. Refer to Highway Bars, page 3.23 to remove the left highway bar, front chin fairing, left chin fairing, and left foot rest assembly.
3. Remove rear brake line clamps as required for oil line access.

   Refer to Illustration on Assembly View - Oil Cooler And Lines, page 4.5.

NOTE
The upper oil cooler mount is secured to the top inner edge of the left chin fairing. Remove the nut (A).

4. Remove screw from P-clamp screw (B).
5. Remove screws (C) from lines at cooler.
6. Remove retainer plate screws (D) and plate.
7. Pull both lines straight outward to remove from crankcase.
8. Slide cooler off of grommets (E).

OIL COOLER / OIL LINE INSTALLATION

Refer to Illustration on Assembly View - Oil Cooler And Lines, page 4.5. Loosely install all parts, then tighten in order shown.

Oil Lines to Engine

1. Assemble support grommet (F) with print facing UP. Install P-clamp over grommet. See P-clamp detail.
2. Install new flat washers on lines.
3. Lubricate new O-rings with engine oil and install against flat washers.
4. Clean oil line sealing surfaces on engine. Carefully align and assemble lines to engine.
5. Install retainer plate (G) with curved edges facing OUT. See detail view.
6. Install screws and torque to specification.

TORQUE
Retainer Plate Screws: **85 in-lb (10 Nm)**

7. If lines are not attached to cooler, install them before installing P-clamp screw.
8. Tighten brake line clamp screws to specification.

TORQUE
Brake Line Clamp: **85 in-lb (10 Nm)**

Oil Cooler Installation

If oil lines were removed from cooler and engine, install engine end first.

9. Lubricate cooler support grommets in bracket with mild soap and water solution.
10. Install cooler, engaging posts with grommets.
11. Install oil lines to cooler.

Oil Lines to Cooler

12. Install new backing washers on oil lines.
13. Lubricate new O-rings with engine oil and install on lines against backing washers.
14. Carefully align and assemble lines to cooler.
15. Install screws and torque to specification.

TORQUE
Oil Cooler Lines: **85 in-lb (10 Nm)**

16. Install left chin fairing and upper cooler mounting nut.
17. Install left foot rest and highway bar.

OIL PRESSURE INSPECTION

LUBRICATION OIL PRESSURE

Use caution when working around hot engine oil. Review all WARNINGS on Operation, page 4.2.

1. Start the engine and run until operating temperature is reached.
2. Turn off the engine.
3. Remove oil pressure sensor ①.
4. Install oil pressure gauge adapter.
   Oil pressure gauge: PV-43531

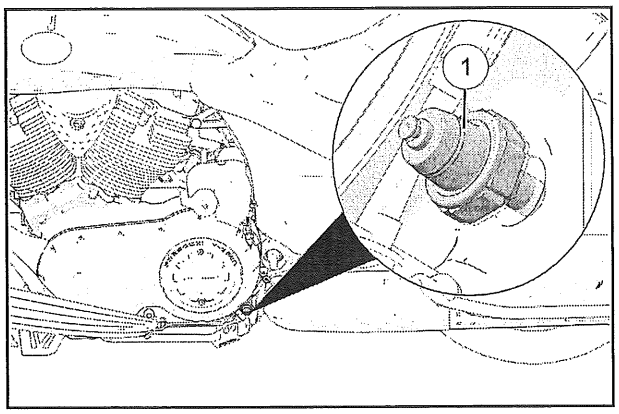

5. Use the dipstick to check the engine oil level and add recommended oil, if necessary.
6. Start engine and check oil pressure at 3000 rpm.
7. If oil pressure is outside of specification, refer to the troubleshooting on Troubleshooting, page 4.2.
8. Once testing is completed, clean threads with Loctite Primer N and apply sealant to threads indicated in Fig. 1 and install.

TORQUE
Oil Pressure Sensor: **115 in-lbs (13 Nm)**

COOLING OIL FLOW INSPECTION

Cooling oil inspection is accomplished by verifying oil flow through the cooler. The temperature of the cooler should be close to crankcase temperature. Pressure testing cannot be performed at the Cylinder Head Temperature (CHT) port, because the sensor does not enter the cooling oil passage. Cooling oil pressure changes along various paths and designed flow restrictions located inside the engine (like voltage drops across a resistive electrical circuit). Diagnostics should be limited to verifying that oil is flowing through the cooler, and that air flow through the cooler and to the engine cylinder fins is unobstructed. Cooling oil enters the cooler on the bottom line and exits (back to the engine) on the upper line.

4

IMPORTANT! Tip conforms to cylinder head metal when installed. It does not contact the cooling oil passage!

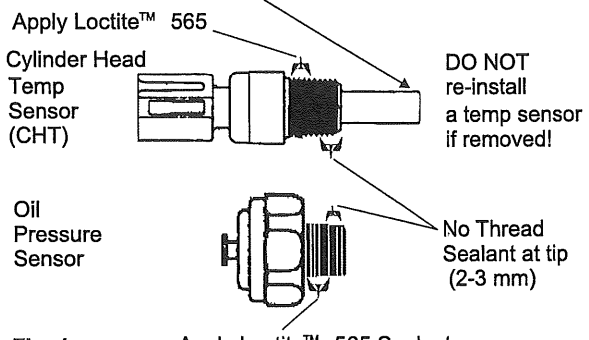

Fig. 1

Cylinder Head Temperature Sensor (CHT)

TORQUE
Cylinder Head Temperature Sensor: **10 ft-lbs (14 Nm)**

NOTE
See Cylinder Head Temperature Sensor (CHT) Diagnostics, page 5.54 for temperature sensor location and installation.

ITEM	STAND-ARD	SERVICE LIMIT
Oil Pressure (3000 RPM): at Oil Pressure Sensor @ 82°C/180°F	552 kPa (80 psi)	< 650 kPa (100 PSI) > 276 kPa (40 PSI)
Cooling Oil	OIL FLOW	-

OIL PUMP

OIL PUMP REMOVAL

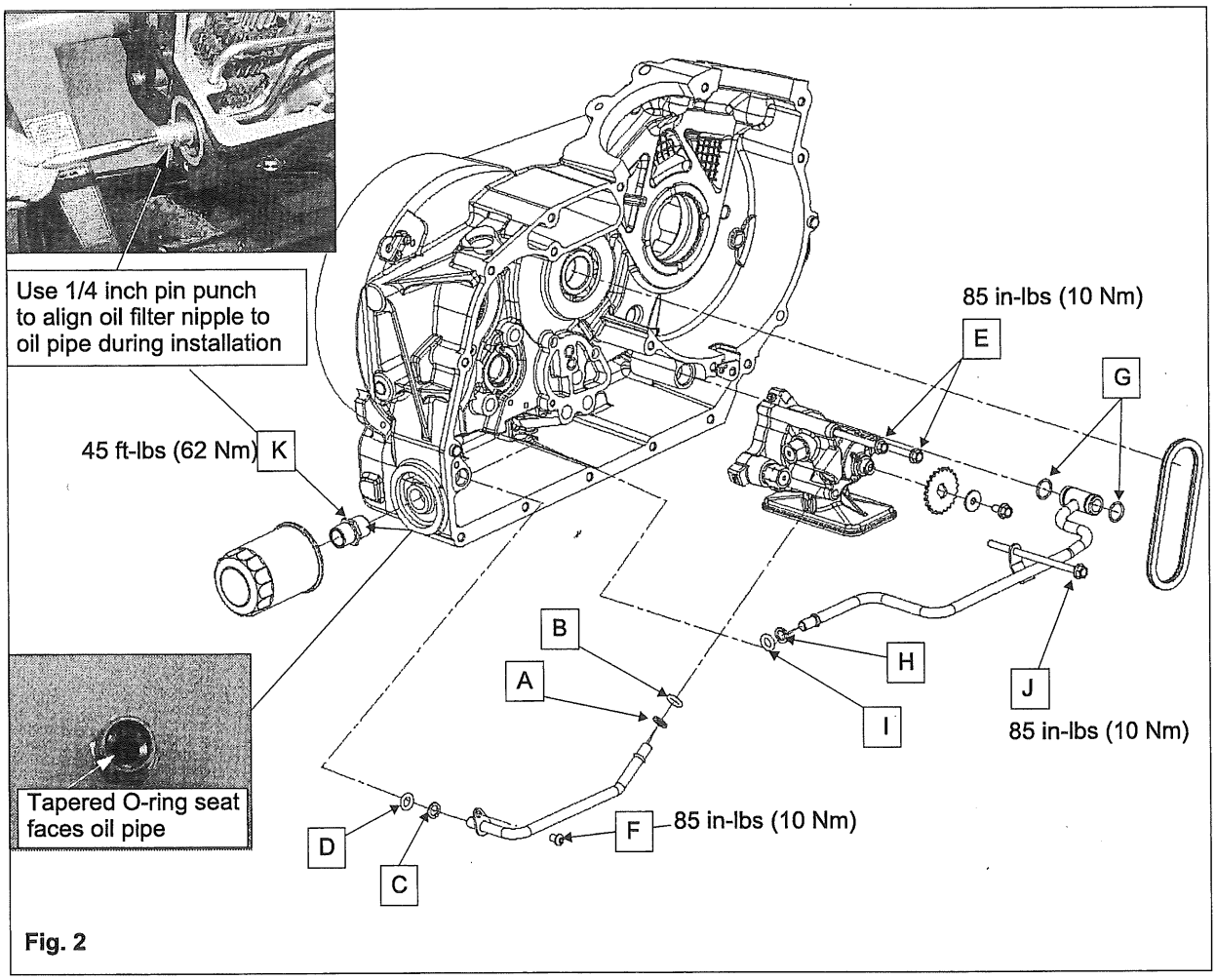

Fig. 2

1. Disassemble engine to access oil pump. (Refer to Preparation For Removal, page 6.4)

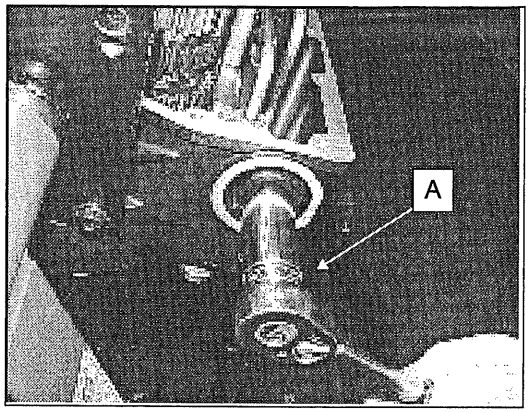

2. Remove oil filter and oil filter nipple (fitting) (A).

NOTE

The oil filter nipple MUST be detached before the long oil delivery tube can be removed. See photo above.

3. Remove retaining screw for short oil tube (C).

NOTE

The washers and/or O-rings for the oil piping may stay in the engine cases/oil pump body. Be sure to retrieve the used O-rings and washers and discard. Use new O-rings and washers during assembly.

4. Detach oil pump drive sprocket bolt and sprocket (D).
5. Remove the (3) oil pump mounting bolts (E). Note that they also hold the oil pump body together.

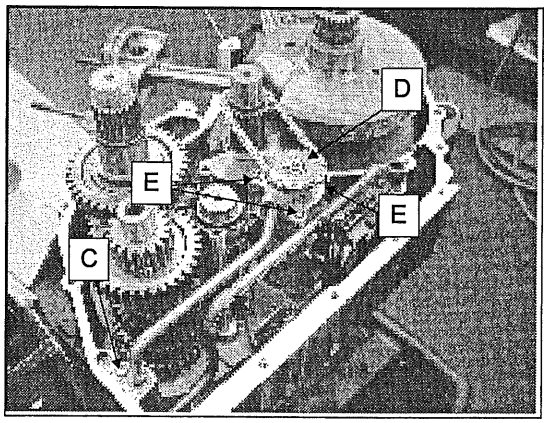

6. Take out the long oil tube.
7. Remove, as a unit, the oil pump and short oil tube being careful not to drop any parts when taking them from the crankcase.

OIL PRESSURE RELIEF VALVES

The lubrication and cooling systems operate at different oil pressures, regulated by pressure relief valves. The valves are not interchangeable. Be sure to install each valve in the proper location on the oil pump as indicated below.

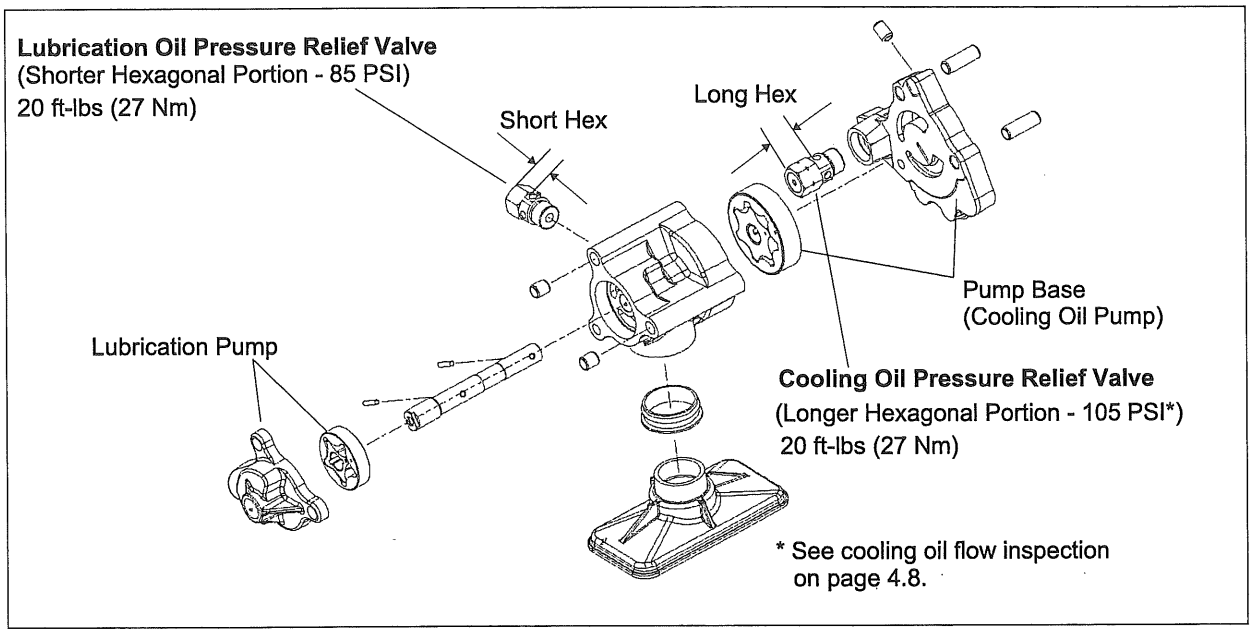

1. Remove the relief valves. The lubrication relief valve (A) has a SHORTER hexagonal portion and screws into the pump BODY (B). The cooling pressure relief valve (C) has a longer hexagonal portion and screws into the pump BASE (D).
2. Visually inspect the relief valve for obstruction or unusual wear.

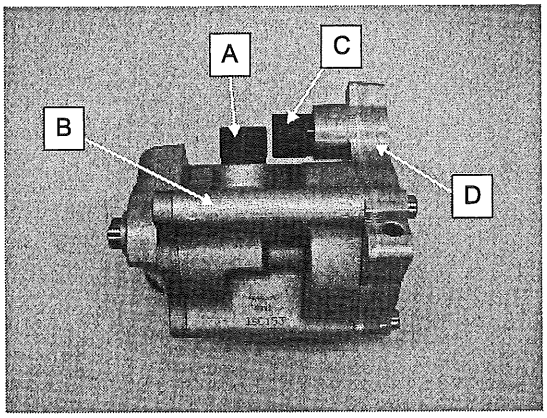

OIL PUMP INSPECTION

Inspect the oil pump when lubrication oil pressure is below specification. The oil pump contains (2) sets of gerotors. Follow the inspection procedure for both sets of gerotors and both ends of the pump.

Keep gerotors together as a set, and oriented the same way (dots on each gerotor must be on the same side upon assembly). The parts are not interchangeable.

If dots on the gerotors are not visible, mark the gerotors upon disassembly so they can be matched and oriented properly upon assembly.

Before disassembling pump completely, follow these inspection steps, and compare to specifications in Lubrication & Cooling System Specifications , page 4.3**.**

1. Remove pump base (A) and lubrication side cap (B).

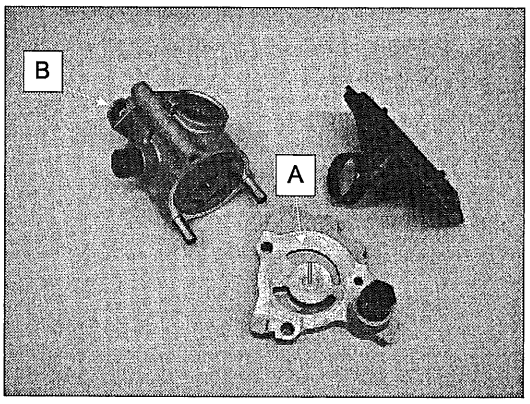

2. Measure tip clearance as shown below for both cooling (larger gerotor set) and lubrication.

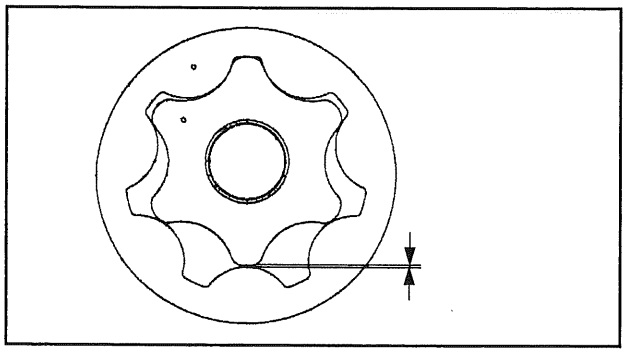

3. Measure clearance between pump body and outer gerotor on the cooling side.

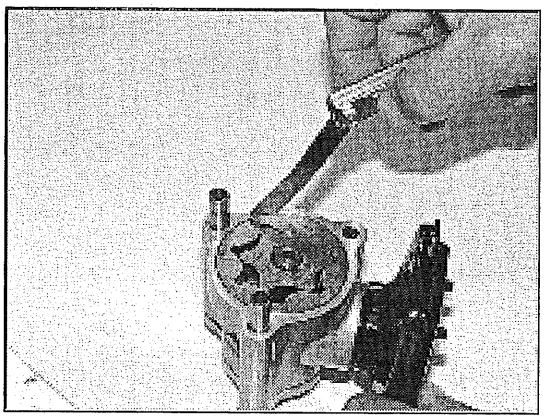

4. Measure oil pump end clearance (C) with a feeler gauge. Lubrication side of pump is shown below.

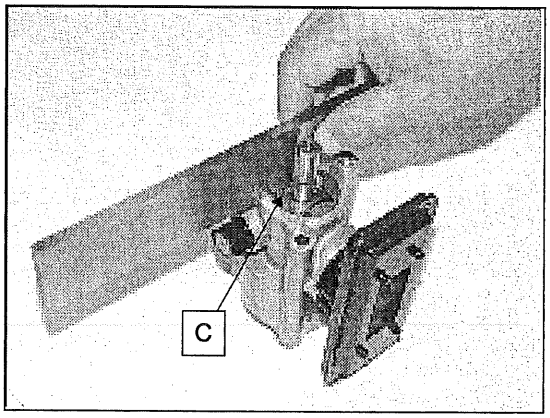

OIL PUMP DISASSEMBLY

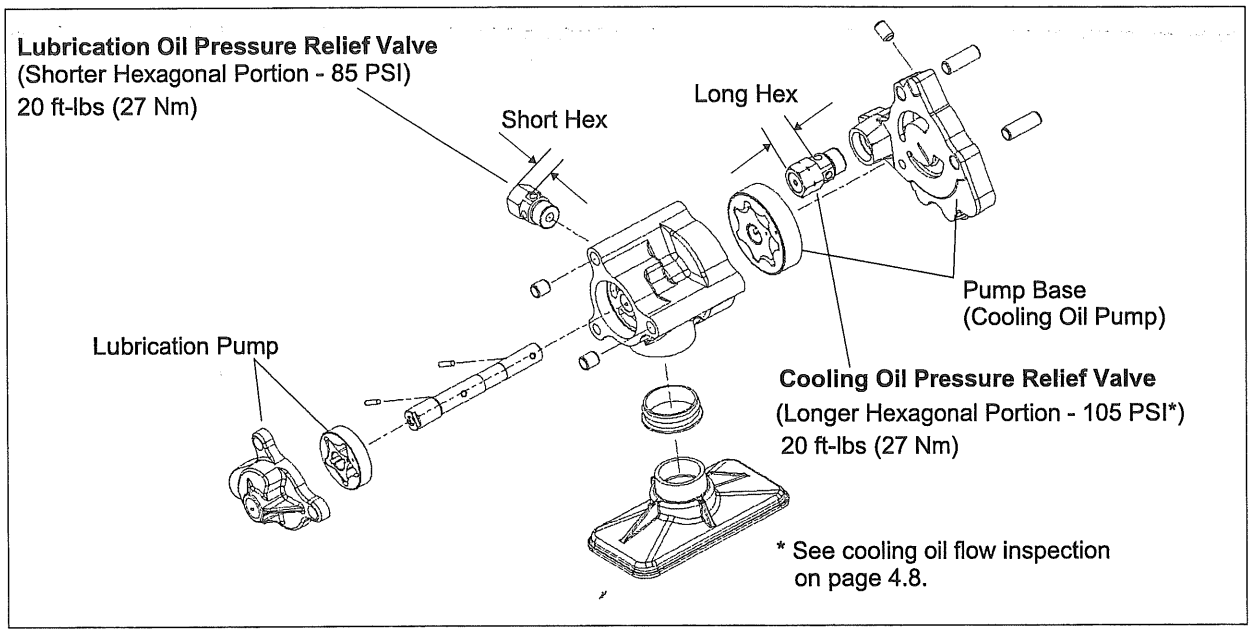

4

NOTE

Keep all parts together during disassembly. Note orientation of dots on gerotors for assembly. Gerotors must be assembled with the dots on the same side. They do not need to be aligned with each other.

1. Remove cooling outer gerotor.

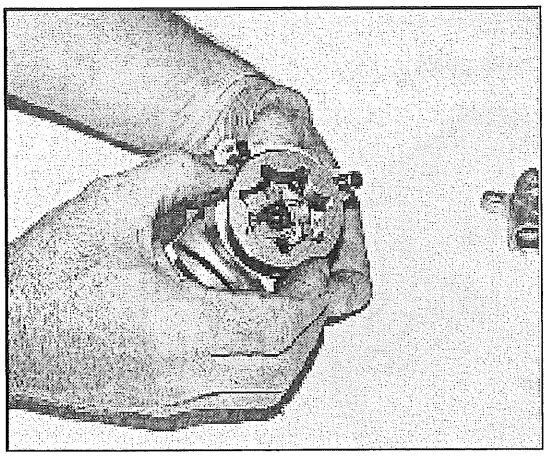

2. Push on opposite end of shaft to allow pin to be removed from lubrication gerotor. Pull lubrication rotor back to expose and remove pin.

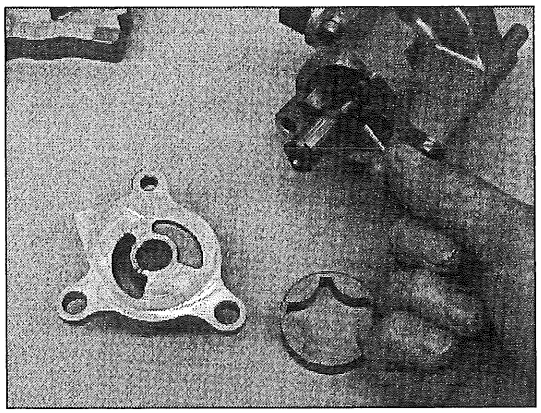

3. Push shaft back toward cooling end of pump and remove pin from cooling gerotor.
4. Pull shaft with inner rotor from pump body.
5. Clean all parts and inspect for wear.
6. Dry with compressed air.

OIL PUMP ASSEMBLY

1. Press short dowel pins into lubrication side of pump body using an arbor press and a 6mm allen head screw (A).

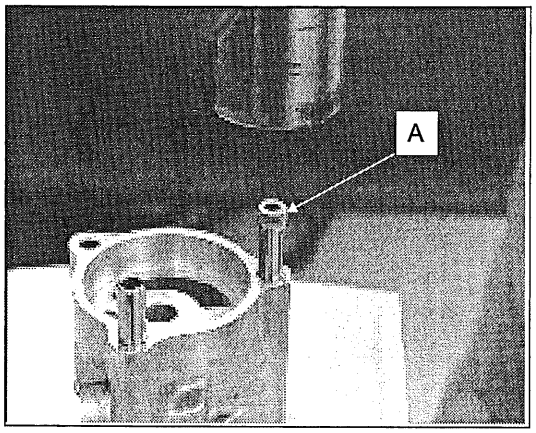

2. Press long dowel pins into cooling side of pump body using same method as above.
3. Secure pump body in a soft jaw vise. Apply Victory engine oil to threads of lubrication pressure relief valve and install into pump body. The lubrication relief valve has a shorter hexagonal portion than the cooling relief valve. Torque to specification.

TORQUE
Pressure Relief Valve: **20 ft-lbs (27 Nm)**

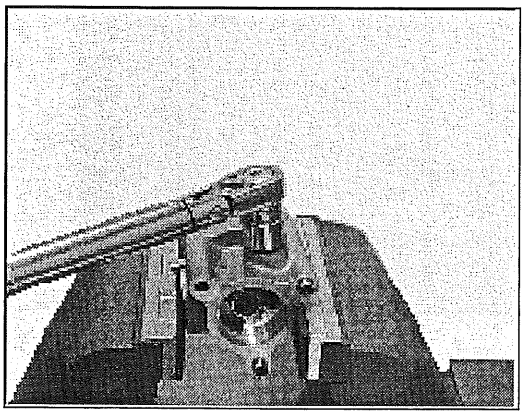

4. Assemble lubrication gerotor on pump shaft.
5. Lubricate shaft with moly assembly paste PN 2871460.
6. Insert pump shaft/rotor assembly into pump body in direction shown (B).

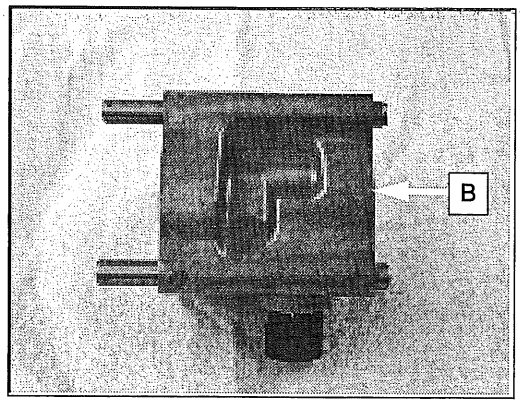

7. Lubricate and install the cooling gerotor with pin slot (C) facing OUT.
8. Insert pin (D) into shaft on cooling side.
9. Push shaft inward while rotating to align pin and slot.

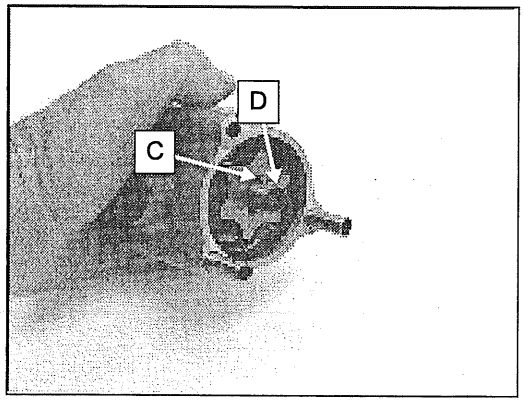

10. Install outer gerotor.

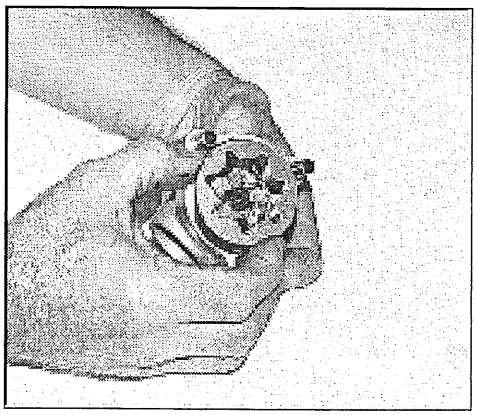

11. Push shaft toward lubrication side and hold in place. Install pin for lubrication rotor. Lubricate both gerotors with oil.
12. Secure pump base in a soft jaw vise. Apply Victory engine oil to threads of cooling pressure relief valve and install into pump base. The cooling relief valve has a longer hexagonal portion than the lubrication relief valve. Torque to specification.

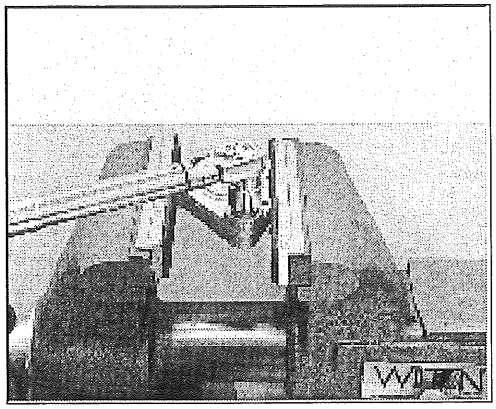

TORQUE
Cooling Pressure Relief Valve: **20 ft-lb (27 Nm)**

13. Install oil jet to oil pump base.

TORQUE
Oil Jet: **115 in-lbs (13 Nm)**

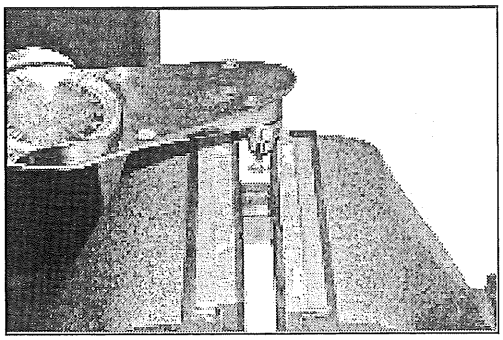

14. Lubricate pressure relief valve assemblies and both lubrication and cooling gerotors with engine oil.
15. Install base (A) and body cap (B) to pump.
16. Install a new oil inlet seal to inlet screen (C).
17. Pre-lubricate the entire oil pump and relief valves with Victory engine oil and assemble screen to oil pump body, aligning groove (D) in screen to tab on pump.

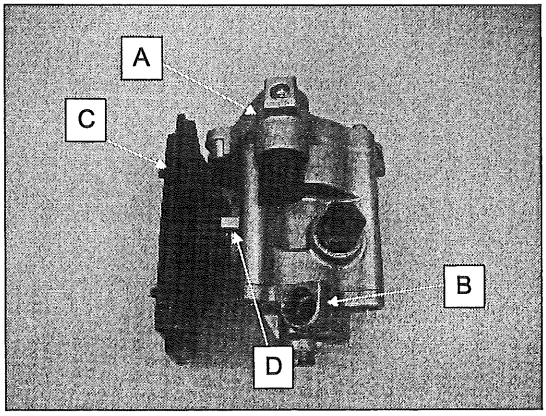

OIL PUMP INSTALLATION

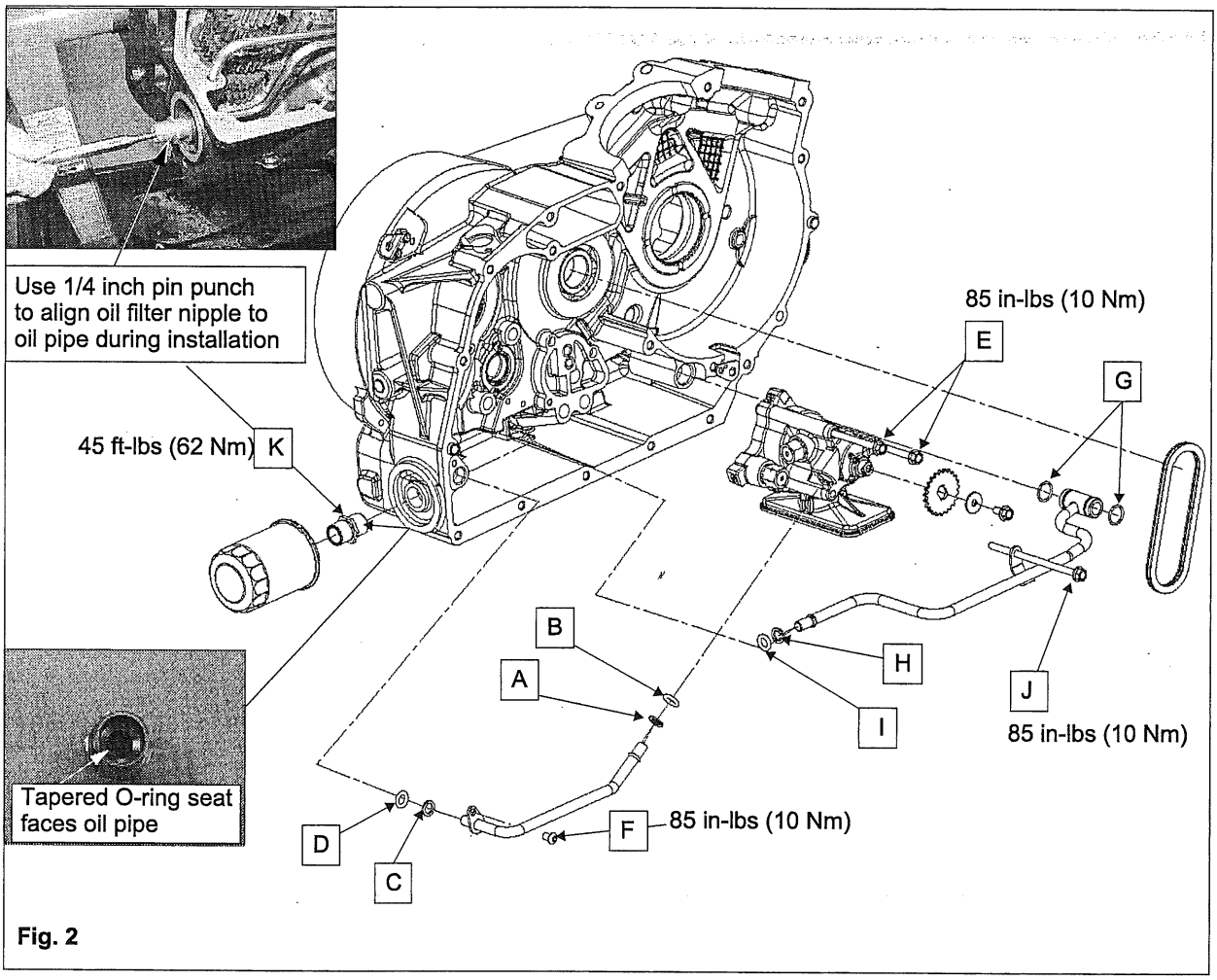

Fig. 2

1. Refer to Fig. 2. Clean oil pipes and dry with compressed air.

NOTE

After oil pump is installed, be sure the pump rotates freely by installing the sprocket without the chain and rotating pump a few revolutions.

2. Use new washers and O-rings upon assembly.
3. Install a backing washer (A) and lightly oiled O-ring (B) onto short oil pipe. Insert pipe into pump body with a twisting motion until seated.
4. Place washer (C) onto the other end of short oil pipe followed by a new lightly oiled O-ring (D).
5. Install oil pump and short pipe into left crankcase. Start by inserting oil pipe into rear of crankcase, then place oil pump into crankcase alignment holes.
6. Start the top two oil pump retaining bolts (E) and the rear pipe bolt (F) but do not tighten at this time.
7. Install new oiled O-rings (G) onto front of long oil pipe. Install new washer (H) on end of pipe and a new O-ring (I).
8. Fit front end of long oil pipe into position at front of crankcase and rear of pipe through oil filter nipple opening in crankcase. Install pipe retaining bolt (J).
9. Torque all pump fasteners to specification.
10. Install oil filter nipple (K). Center the oil pipe to the fitting with a 1/4 inch pin punch as shown.

11. Temporarily install pump sprocket on pump shaft (without the chain) and turn oil pump over by hand.

NOTE

Turn pump shaft by hand a few revolutions to make sure it turns freely.

12. Remove sprocket so chain can be installed.
13. Install chain over oil pump sprocket and balance shaft sprocket. Align pump sprocket to shaft and install retaining bolt (A). Torque to specification.

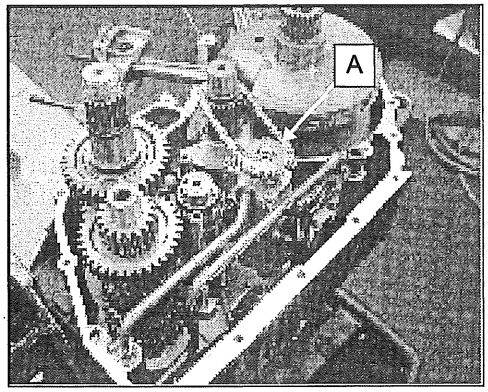

TORQUE

Pump Sprocket Bolt:
85 in-lb (10 Nm)

NOTE

The sprocket is a floating design. A small amount of end play is normal after tightening the retaining bolt.

14. Refer Assembly View - Crankcase, page 10.6 to for crankcase assembly.
15. Verify proper lubrication oil pressure after assembly.

NOTES

CHAPTER 5
FUEL SYSTEM / FUEL INJECTION

PRECAUTIONS 5.3
FUEL SAFETY PRECAUTIONS 5.3
EFI SYSTEM PRECAUTIONS 5.4
GENERAL INFORMATION 5.6
FUEL SYSTEM SPECIFICATIONS 5.6
FUEL SYSTEM SERVICE TOOLS 5.6
BASIC TROUBLESHOOTING 5.7
THROTTLE BODY FLOW SCREW AND IDLE STOP SCREW 5.7
FUEL SYSTEM ASSEMBLY VIEWS 5.8
FUEL TANK AND CAP MOUNTING 5.8
FUEL TANK 5.9
FUEL TANK VENT WATER DRAIN LINE ROUTING - 49 STATE 5.10
FUEL TANK EVAPORATIVE EMISSIONS SYSTEM - CALIFORNIA MODELS 5.11
FUEL PUMP / LEVEL SENSOR REFERENCE DATA 5.12
FUEL PUMP ASSEMBLY VIEWS 5.14
AIR INTAKE / BOX FRAME ASSEMBLY VIEW 5.15
IDLE AIR CONTROL ASSEMBLY VIEW 5.16
FUEL SYSTEM SERVICE 5.17
FUEL SYSTEM DEPRESSURIZATION 5.17
PRIMING THE FUEL SYSTEM 5.17
FUEL TANK VENT INSPECTION - 49 STATE 5.18
FUEL TANK VENT INSPECTION - CALIFORNIA 5.18
FUEL TANK REMOVAL 5.19
FUEL TANK INSTALLATION 5.20
FUEL PUMP REMOVAL 5.21
FUEL FILTER REPLACEMENT 5.22
FUEL LEVEL SENSOR REMOVAL 5.24
FUEL LEVEL SENSOR INSTALLATION 5.24
FUEL PUMP INSTALLATION 5.25
FUEL PUMP CIRCUIT DIAGRAM 5.28
FUEL PUMP PRESSURE INSPECTION 5.29
FUEL LEVEL SENSOR RESISTANCE TEST 5.30
FUEL LEVEL SENSOR BYPASS TEST 5.30
ERROR MESSAGE (CROSS ROADS) 5.31
FUEL PUMP ELECTRICAL DIAGNOSTICS 5.31
FUEL PUMP SUPPLY VOLTAGE TEST 5.31
BATTERY VOLTAGE TO FUEL PUMP 5.32
FUEL PUMP CURRENT DRAW TEST 5.33
IDLE AIR CONTROL REMOVAL 5.34
THROTTLE BODY REMOVAL 5.35
THROTTLE BODY INSTALLATION 5.36
EFI SYSTEM COMPONENTS 5.38

FUEL INJECTION COMPONENT LOCATIONS....5.38
FUEL RAIL / FUEL INJECTOR REMOVAL....5.39
FUEL RAIL INSTALLATION....5.39
OXYGEN SENSOR DIAGRAMS....5.40
FUEL INJECTION SYSTEM TESTING AND DIAGNOSTICS....5.41
FUEL INJECTION SYSTEM - OPERATION....5.41
IDLE AIR CONTROL (IAC) - OPERATION....5.41
ECM CONNECTOR MAP....5.42
SELF-DIAGNOSTIC FEATURE....5.43
VIEWING AND CLEARING TROUBLE CODES....5.43
SENSOR DIAGNOSTICS - IMPORTANT INFORMATION TO UNDERSTAND BEFORE YOU BEGIN....5.44
TROUBLE CODES....5.45
SPN / FMI ERROR CODES (CROSS COUNTRY)....5.47
ECM HARNESS CONNECTOR TEST PRECAUTIONS....5.47
ECM CONNECTOR REMOVAL....5.48
ECM REMOVAL....5.48
EFI SENSOR CIRCUIT WIRING DIAGRAMS....5.49
EFI SENSOR CIRCUIT WIRING DIAGRAMS....5.50
SENSOR TESTS....5.51
THROTTLE POSITION SENSOR (TPS) DIAGNOSTICS....5.51
TEMPERATURE & MANIFOLD ABSOLUTE PRESSURE SENSOR (TMAP) DIAGNOSTICS....5.52
AIR TEMPERATURE SENSOR (ATS) DIAGNOSTICS....5.53
CYLINDER HEAD TEMPERATURE SENSOR (CHT) DIAGNOSTICS....5.54
IDLE AIR CONTROL (IAC)....5.55
VEHICLE SPEED SENSOR TEST....5.56
NEUTRAL INDICATOR SWITCH TEST....5.56
MEMORY CHECK SUM ERROR....5.56
TIPOVER SENSOR....5.56
CRANKSHAFT POSITION SENSOR DIAGNOSTICS....5.56
BATTERY VOLTAGE AT ECM DIAGNOSTICS....5.57
DIGITAL WRENCH....5.58
USING DIGITAL WRENCH® DIAGNOSTIC SOFTWARE....5.58
TOOLS....5.58
DIAGNOSTIC SOFTWARE VERSION....5.58
TPS CALIBRATION NOT REQUIRED....5.58
ECM REPLACEMENT....5.58
DIGITAL WRENCH® FEATURES....5.58
DIGITAL WRENCH® GUIDED DIAGNOSTICS....5.59
DIGITAL WRENCH® COMMUNICATION ERRORS....5.59
DIGITAL WRENCH® FEATURE MAP....5.60
DIGITAL WRENCH® SCREEN EXAMPLES....5.61
REPROGRAMMING THE ENGINE CONTROL MODULE (ECM)....5.63
REPROGRAMMING TIPS....5.63
REPROGRAMMING PROCESS....5.64
TROUBLESHOOTING....5.67
FUEL SYSTEM TROUBLESHOOTING....5.67

PRECAUTIONS

FUEL SAFETY PRECAUTIONS

Many hazards are present when working on or around the fuel injection system. Read and pay close attention to the following warnings and cautions when working on any component in this section.

⚠ WARNING

Gasoline is extremely flammable and explosive under certain conditions.
Always stop the engine and refuel outdoors or in a well ventilated area.
Do not smoke or allow open flames or sparks in or near the area where refueling is performed or where gasoline is stored.
Do not overfill the tank. Do not fill the tank neck above the fuel tank insert. Leave air space to allow for fuel expansion.
If you get gasoline in your eyes or if you swallow gasoline, see your doctor immediately.
If you spill gasoline on your skin or clothing, immediately wash it off with soap and water and change clothing.
Never start the engine or let it run in an enclosed area. Engine exhaust fumes are poisonous and can cause loss of consciousness and death in a short time.

⚠ WARNING

Gasoline is extremely flammable and is explosive under certain conditions. Work in a well ventilated area. Open flames, sparks and cigarettes must be kept away from gasoline.

KEEP GASOLINE OUT OF THE REACH OF CHILDREN

⚠ WARNING

Careless handling of the control cables can result in twisting or bending of the cables. This can cause the cables to stick or bind, resulting in loss of vehicle control.

⚠ WARNING

The engine exhaust from this product contains chemicals known to cause cancer, birth defects or other reproductive harm.

⚠ WARNING

The engine and exhaust system become very hot during operation and remains hot for a period of time after the engine is shut off. Wear insulated protection for hands and arms or wait until the engine and exhaust system have cooled before performing service work.

DO NOT TAMPER WITH THROTTLE BODY FLOW SCREW

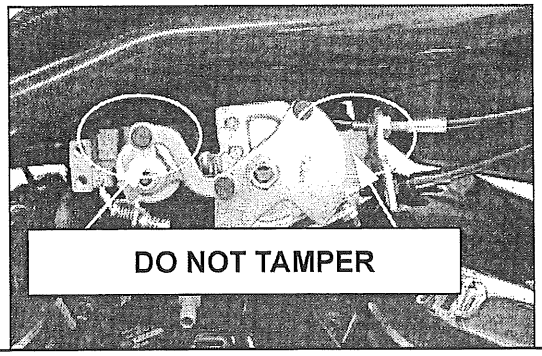

DO NOT TAMPER WITH IDLE STOP SCREW

5

EFI SYSTEM PRECAUTIONS

NOTICE

While electronic fuel injection (EFI) is durable and reliable, the components can be damaged or problems may occur if the following precautions are not taken

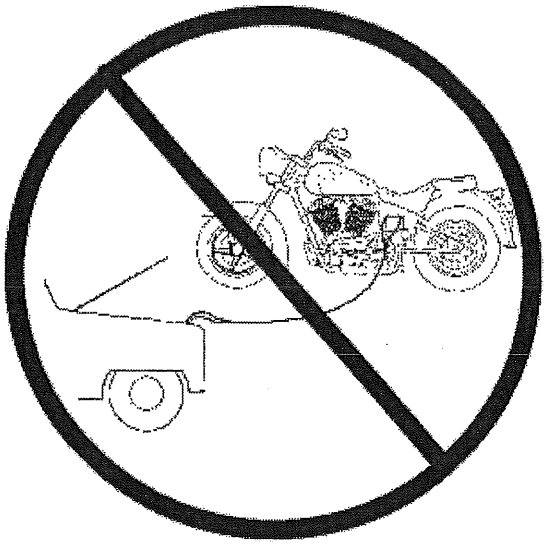

It is not advisable to "jump start" the machine with another battery. Although problems are unlikely to occur if everything is done carefully, the electrical component could be damaged.

Never disconnect the battery while the engine is running.

When connecting and disconnecting the battery cables refer to Battery Inspection & Charging Procedures, page 18.8 for complete battery connection and charging information.

Make sure that the key switch is off before connecting and disconnecting connections. Best practice is to disconnect the battery before connecting or disconnecting the electrical connections.

Fuses and circuit breakers protect critical electrical components and circuits. Never replace the fuse with a larger value fuse or "jumper" the fuse with wire, aluminum foil or any other means. Always investigate the cause of the problem and repair before replacing the fuse.

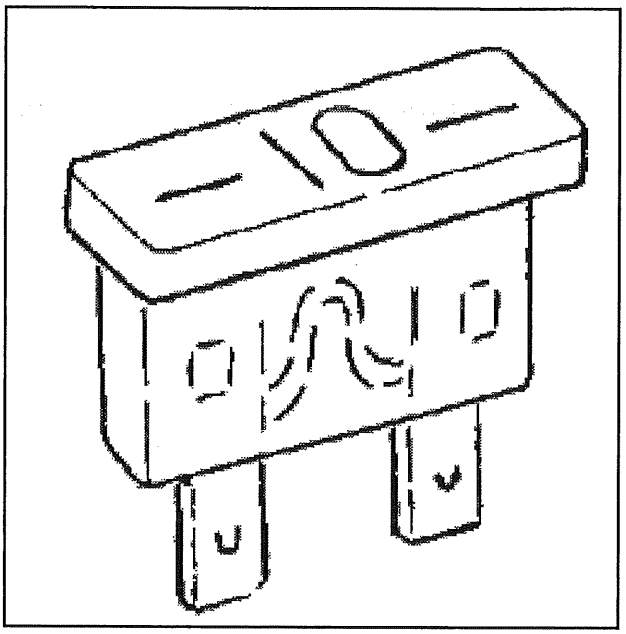

The ECM and the sensors are sensitive pieces of electronic equipment. Dropping or hitting them may cause irreparable damage

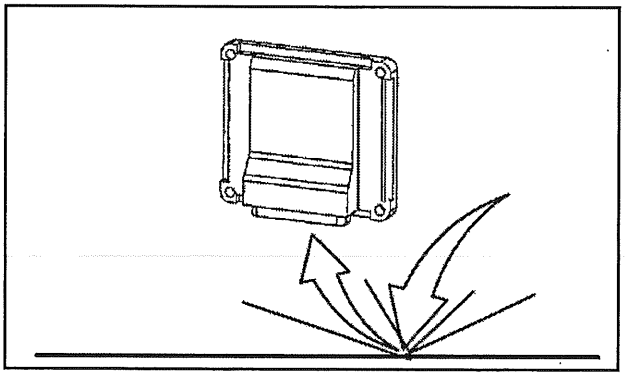

Static electricity can damage the ECM beyond repair. The human body can easily store enough static electricity to damage sensitive electronic components. Before working with any components of the Fuel Injection system, ground yourself to dissipate any static charge. Also take care not to touch any of terminal pins on the ECM.

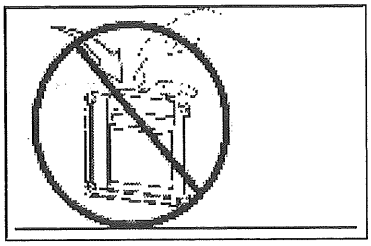

Do not touch ECM connector pins

Anti-static Wrist Strap PV-43541

NOTE

Some tests require probing of the ECM wiring harness connector. Do not touch or probe the exposed pins on the ECM. Static electricity from your body or the meter can easily damage the ECM.

Always use the proper adapter from the Connector Test Adapter Kit when probing the terminals. Many of the connectors are sealed and cannot be back probed. Be extremely careful not damage the connectors by forcing meter probes into the connectors.

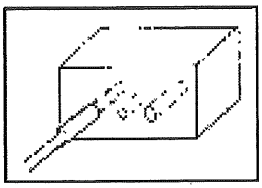

Use proper test adapters on connector pins

Connector Test Adapter Kit PV-43536

Poor connections are the most common cause of EFI malfunctions. Inspect wires at connectors and at the fuse box during troubleshooting. Be sure they are secured in their slots and pushed out or loose.

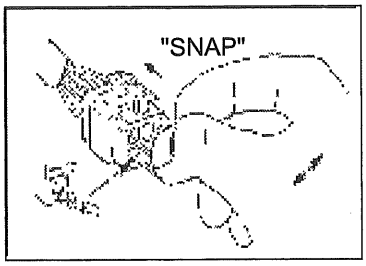

Wire terminals must be corrosion free and fully seated. Connectors should snap together and lock.

GENERAL INFORMATION

FUEL SYSTEM SPECIFICATIONS

ITEM	SPECIFICATIONS
Fuel Octane (Minimum)	91 Octane (R+M/2)
Fuel Pump Pressure	3.51 BAR (351 kPa) (51 psi)
Fuel Pump Volume (Approximate @ 12 V)	60 liters / hr 500 ml (16.9 oz) / 30 sec 0.26 gal / min
Fuel Pump Current Draw	5A maximum
Fuel Level Sensor Resistance	50 - 250 Ohms ± 5%
Idle Speed / Fast Idle Speed	Not Adjustable (Set by ECM and IAC valve) Spec Idle Speed is 950 rpm ± 100
Injector Resistance	11.4 - 12.6 Ohms
Throttle Grip Free-Play	2-4 mm (1/16"-5/32")

NOTE

Idle speed is continuously monitored and adjusted by the ECM via the IAC valve. DO NOT tamper with or attempt to "adjust" the idle stop screw or throttle plate flow screw! They are factory pre-set. If idle is erratic or if idle speed is incorrect, refer to troubleshooting in this section to find the cause of the problem.

FUEL SYSTEM SERVICE TOOLS

TOOL DESCRIPTION		BOSCH AUTOMOTIVE SERVICE SOLUTIONS PART NUMBER
Diagnostic Tool Kit (PV-46085-B)		PV-46085-B
PV-46085–B INCLUDES:	Digital Wrench Software	PU-47052-G
	Standard Interface Cable	PU-47151
	Victory Adapter	PV-46085-2
	SmartLink Interface Kit	PU-47471
Fuel Pressure Gauge		PU-43506-A
Fuel Pressure Gauge Adapter		PV-48656
Fluke 77 Digital Multi Meter		PV-43568
Electrical Connector Test Adapter Kit		PV-43526
Relay Jumper (to run fuel pump)		PU-49466
Fuel Tank Fitting Plug Tool (9.5mm)		PV-50251
Fuel Tank Fitting Plug Tool (11.8mm)		PV-50567

BASIC TROUBLESHOOTING

NOTE

The closed-loop EFI system does not require TPS calibration. Refer to Fuel System Troubleshooting Fuel System Troubleshooting, page 5.67.

DO NOT OVERLOOK THE BASICS WHEN TROUBLESHOOTING:

1. Battery in a low state of charge can cause problems. Be sure the battery is in good condition and fully charged.
2. Air leaks in intake tract / air box - check for air leaks and repair to avoid mis-diagnosing the EFI system.
3. Contaminated or improper fuel.
4. Restricted fuel flow / filters (low fuel pressure).
5. Fuel tank vent line pinched or obstructed.
6. Faulty spark plug(s).
7. Corroded, disconnected, or mis-connected wiring. Pay close attention to wires at the back of connectors and at the fuse box to be sure they are secured in their slots and not loose.
8. Poor electrical ground connections.
9. Exhaust system restriction, improper exhaust, air leaks at joints or head pipe flange.
10. Engine mechanical condition.

THROTTLE BODY FLOW SCREW AND IDLE STOP SCREW

DO NOT TAMPER WITH THESE SCREWS!

Throttle body flow and idle stop screws are factory pre-set. Throttle body must be replaced if screw setting is changed.

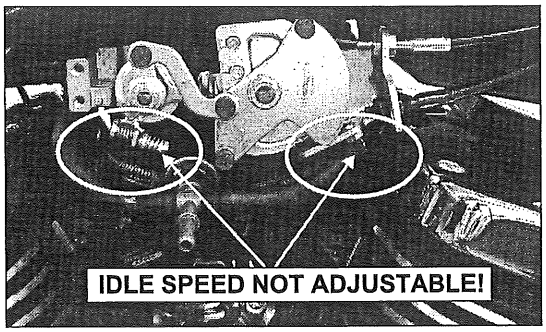

5

FUEL SYSTEM ASSEMBLY VIEWS

FUEL TANK AND CAP MOUNTING

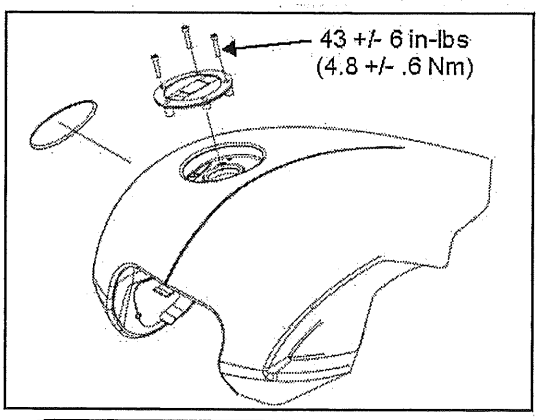

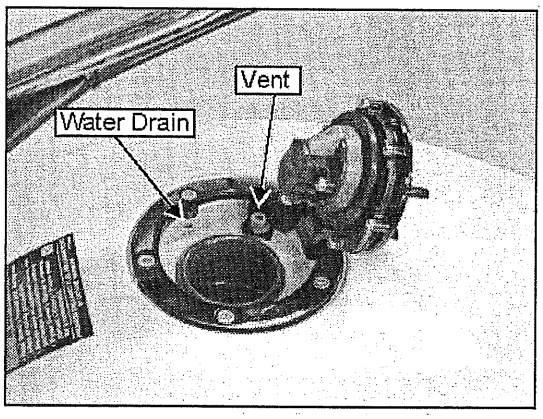

Tank Badge Removal:
Carefully lift top edge of badge away from tank to expose adhesive. Do not bend or force badge! Apply a few drops of lacquer thinner to loosen adhesive bond. Work adhesive patch slowly away from tank, wiping any excess thinner away as you work. Do not allow thinner to remain on painted surface or badge.

Tank Badge Installation:
Clean surface of tank with alcohol and allow to dry.
Press badge to tank with 40 pound force and hold for 5-10 seconds

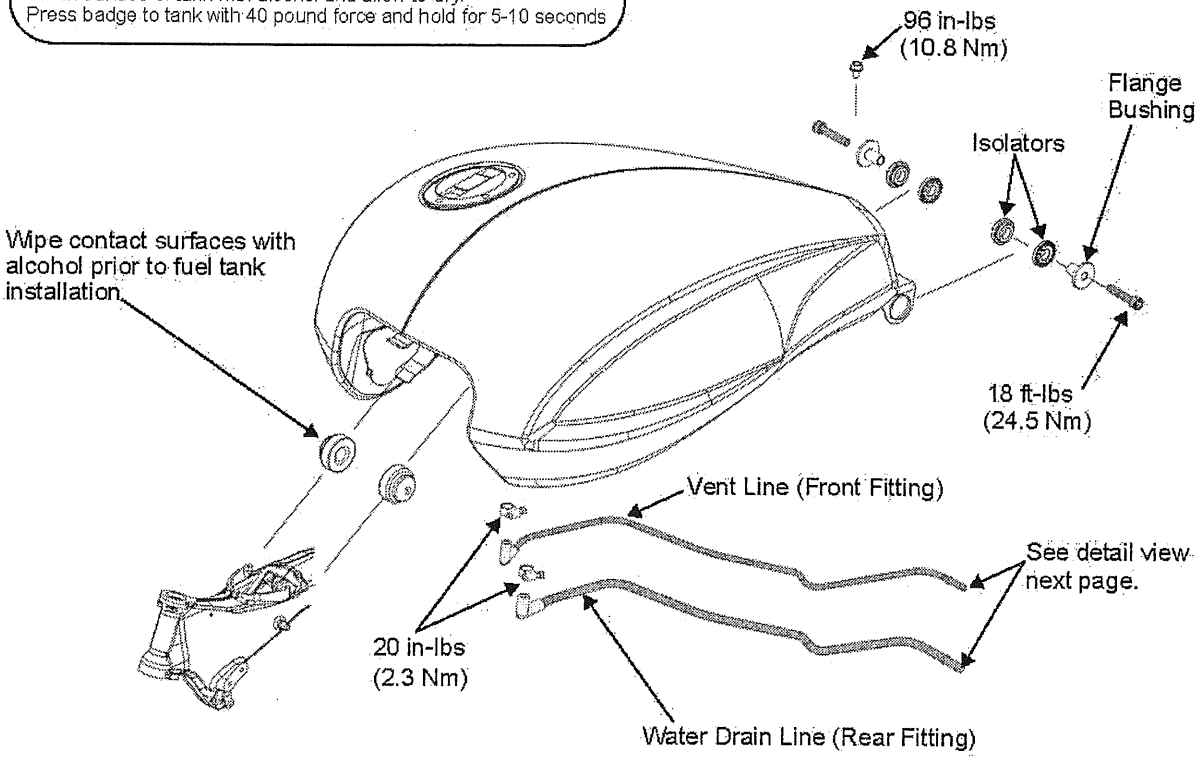

FUEL TANK

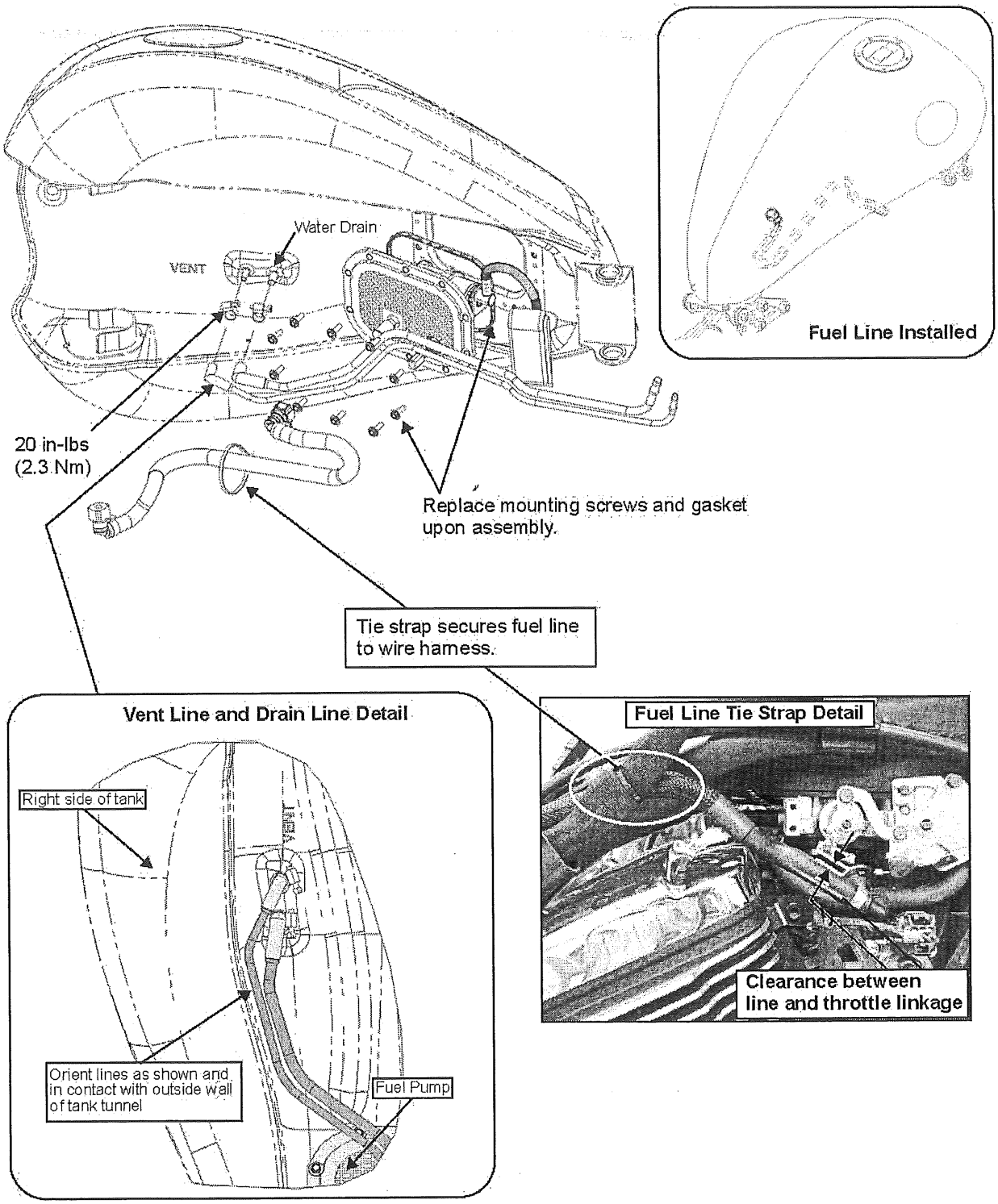
Water Drain
VENT
20 in-lbs
(2.3 Nm)
Replace mounting screws and gasket upon assembly.
Fuel Line Installed
Tie strap secures fuel line to wire harness.
Vent Line and Drain Line Detail
Right side of tank
Orient lines as shown and in contact with outside wall of tank tunnel
Fuel Pump
Fuel Line Tie Strap Detail
Clearance between line and throttle linkage

5

FUEL TANK VENT WATER DRAIN LINE ROUTING - 49 STATE

Be sure hoses are in good condition and securely connected to the proper fitting. Secure lines where indicated.

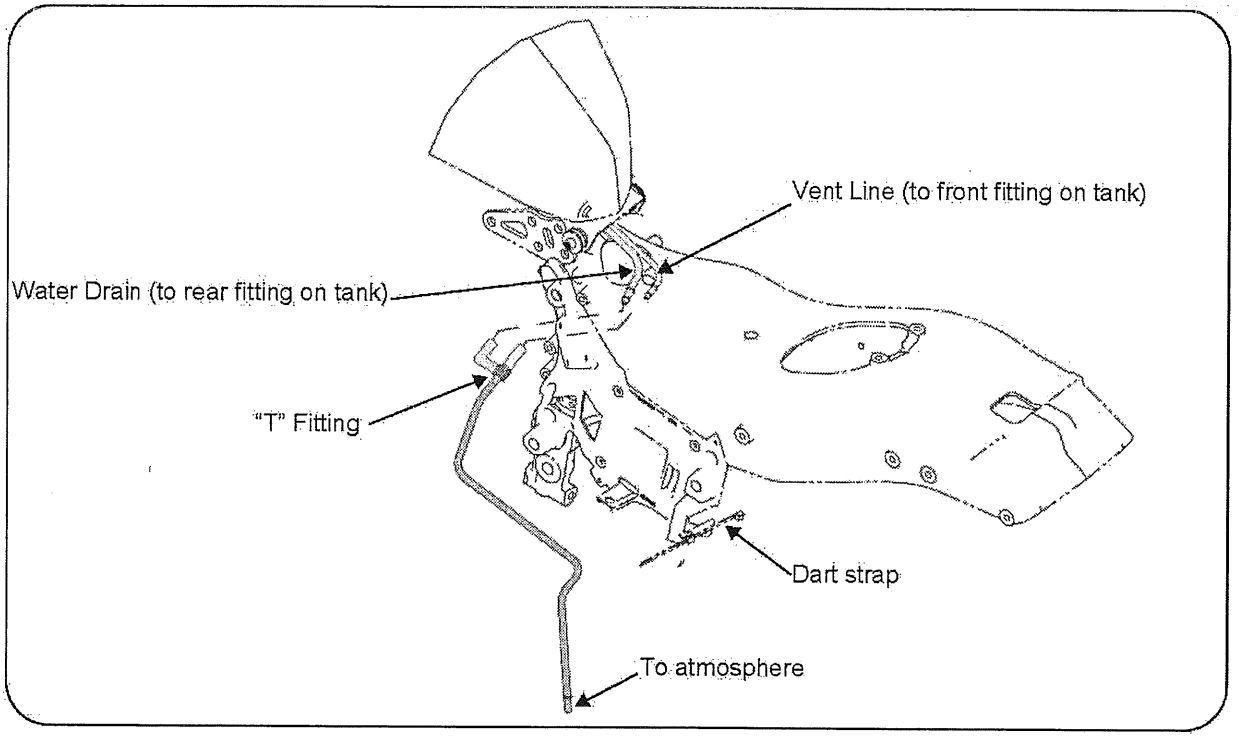

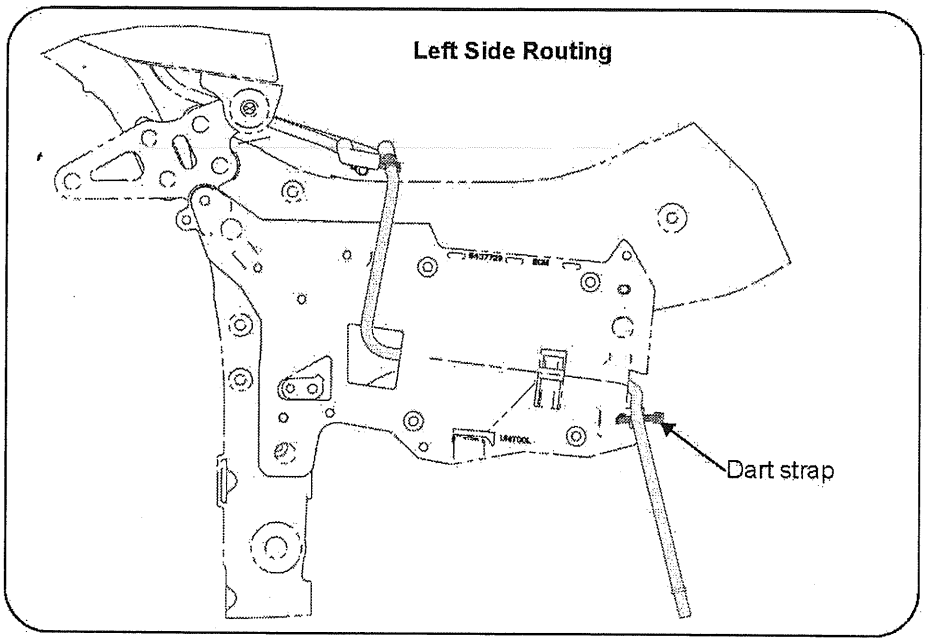

FUEL TANK EVAPORATIVE EMISSIONS SYSTEM - CALIFORNIA MODELS

Be sure hoses are in good condition and securely connected to the proper fitting. Secure lines where indicated.

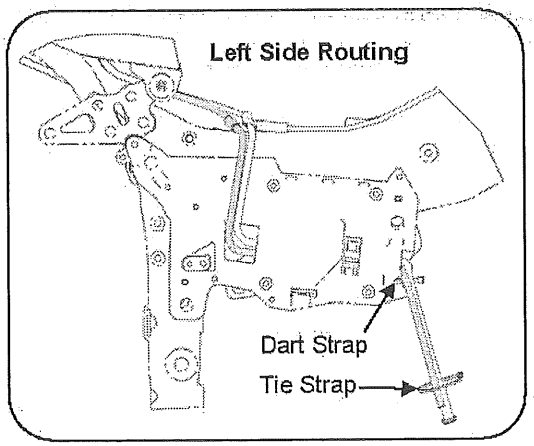

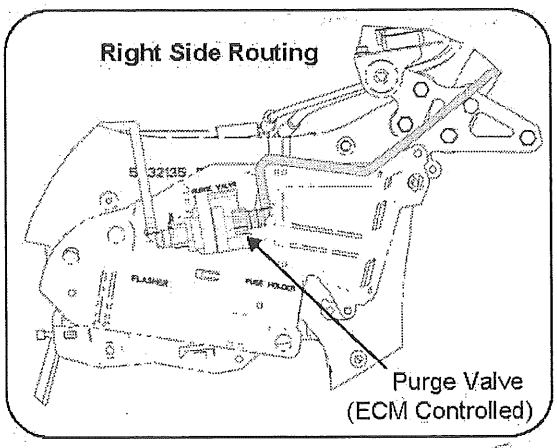

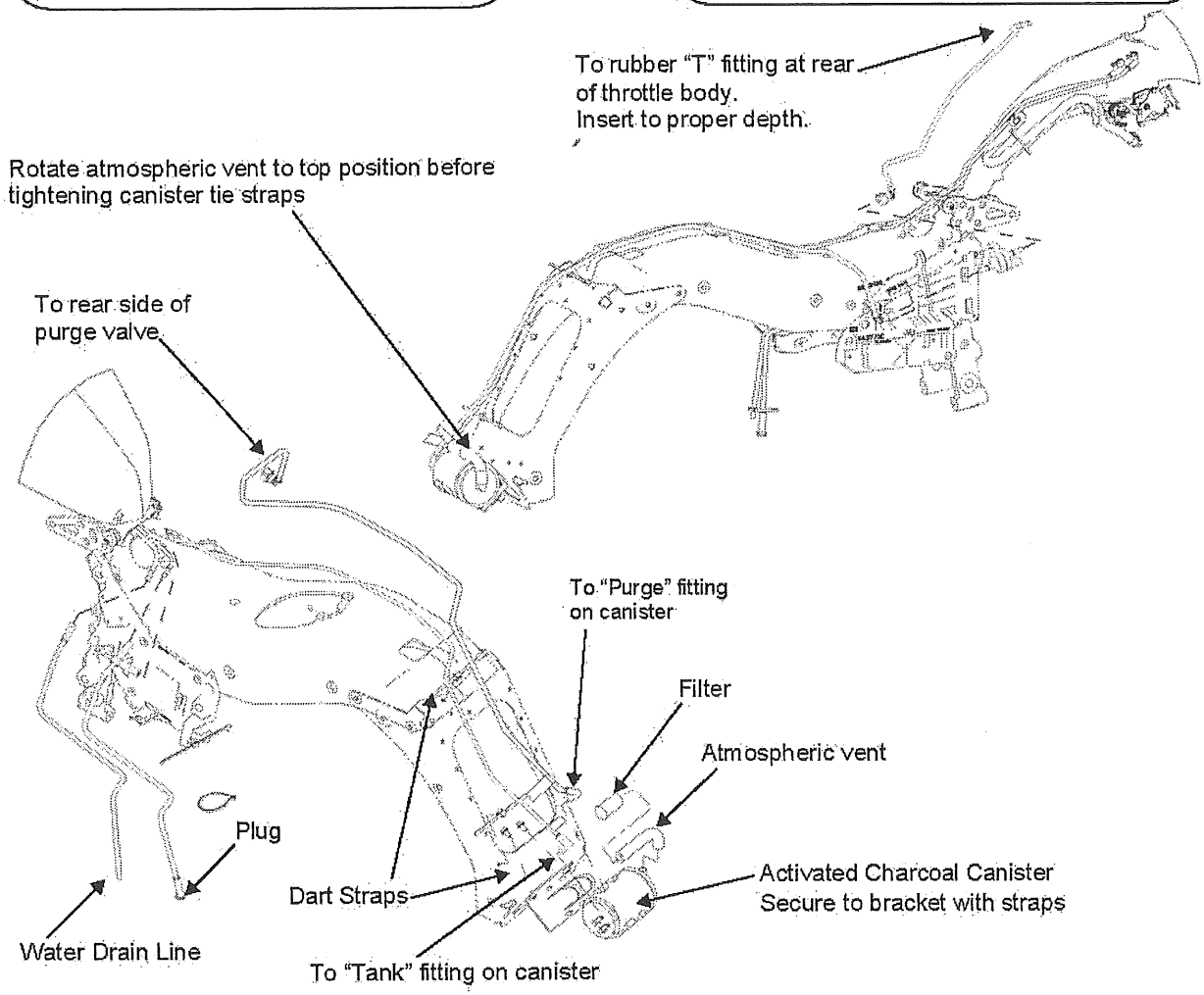

5

FUEL PUMP / LEVEL SENSOR REFERENCE DATA

Fuel Level Sensor Test - Fuel Level Sensor Resistance Test, page 5.30
Fuel Pump Test - Fuel Pump Electrical Diagnostics, page 5.31
Fuel Pressure Test - Fuel Pump Pressure Inspection, page 5.29
Fuel Pump Installation -

IMPORTANT
Improper installation of pump can result in fuel starvation at low fuel levels. Refer to procedure on Fuel Pump Installation, page 5.25.

TOP VIEW - Fuel Pump Installed in Tank

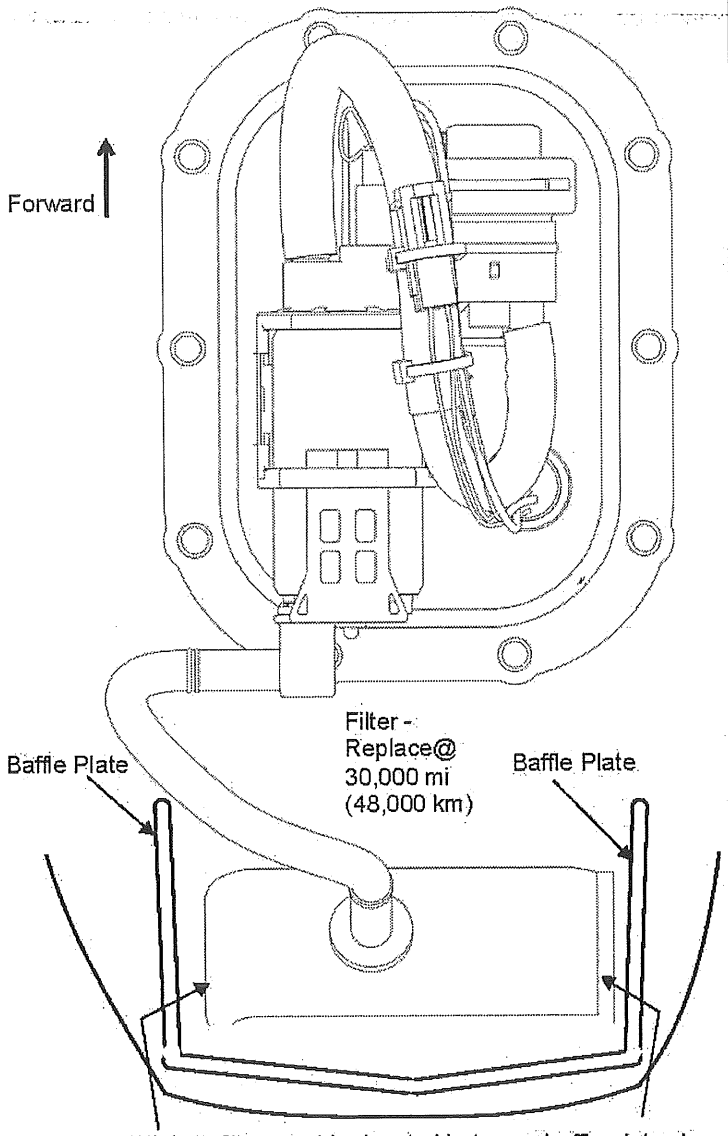

Pickup filter must be located between baffle plates in rear of tank to prevent fuel starvation at low fuel levels. See Fuel Pump Installation procedure.

FUEL PUMP DATA (Room Temperature)

Fuel Pressure: 3.51 BAR (351 kPa) (51 PSI)

Current Draw: ≤ 5.0 Amp

Level Sensor Resistance Empty: 250 Ohms

Level Sensor Resistance Full: 50 Ohms

Fuel Sensor Resistance Test

Pin A to Pin B: 50-250 Ω ± 5%

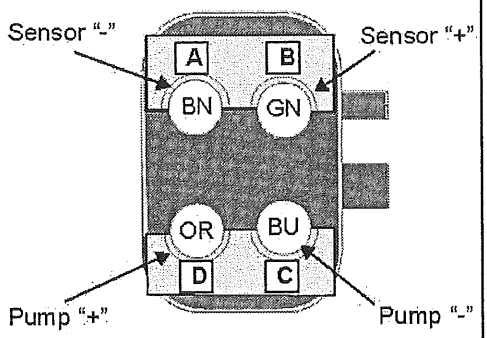

View - WIRE side of pump connector

Fuel Pump Torque Sequence

43 in-lbs (4.8 Nm)

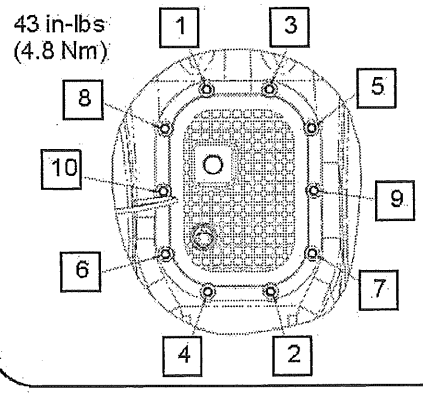

5

FUEL PUMP ASSEMBLY VIEWS

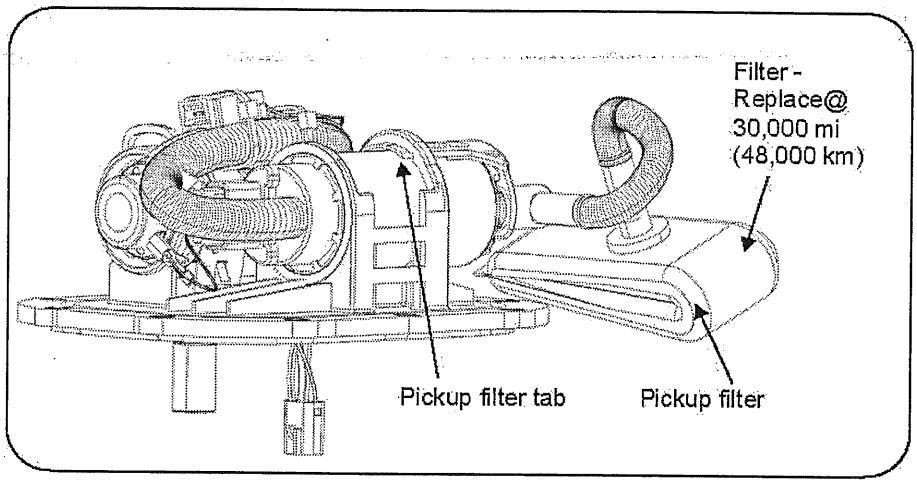

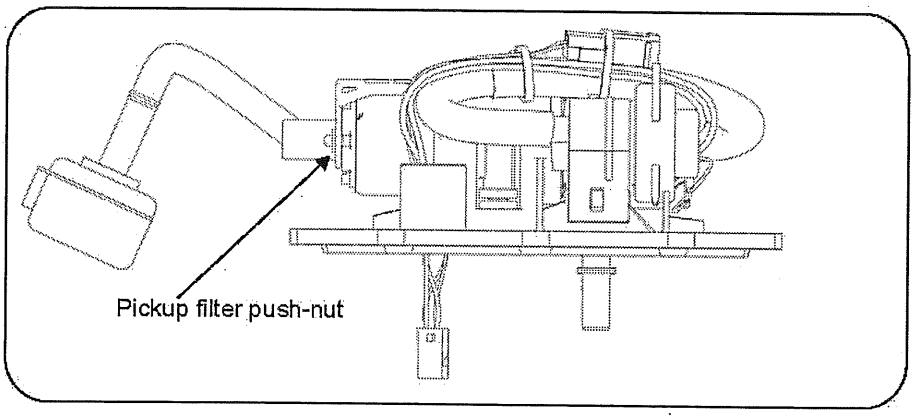

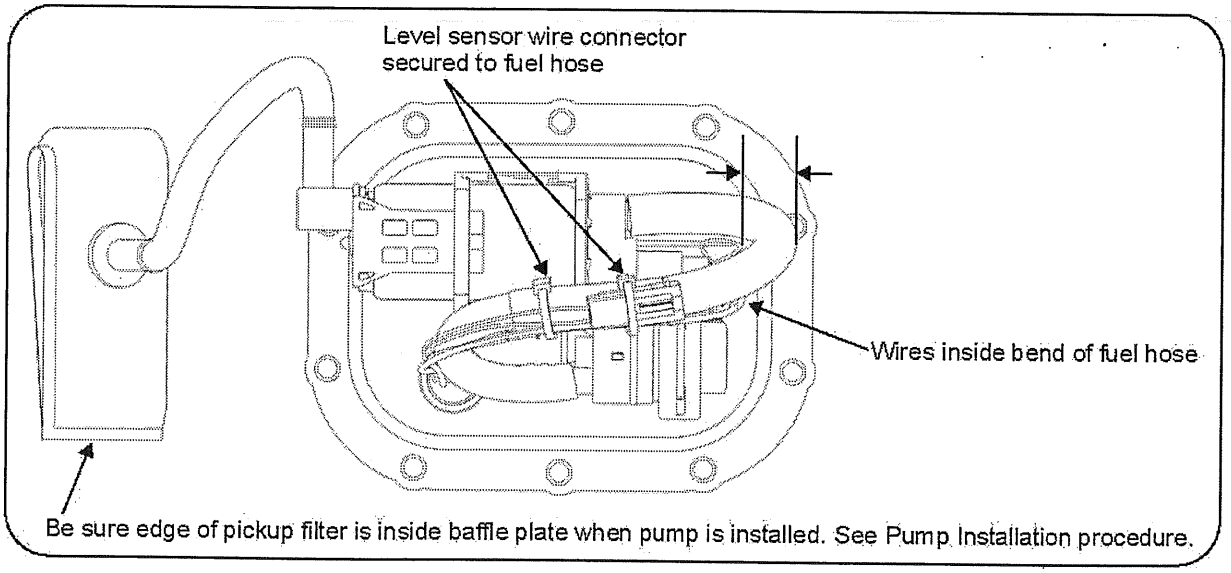

AIR INTAKE / BOX FRAME ASSEMBLY VIEW

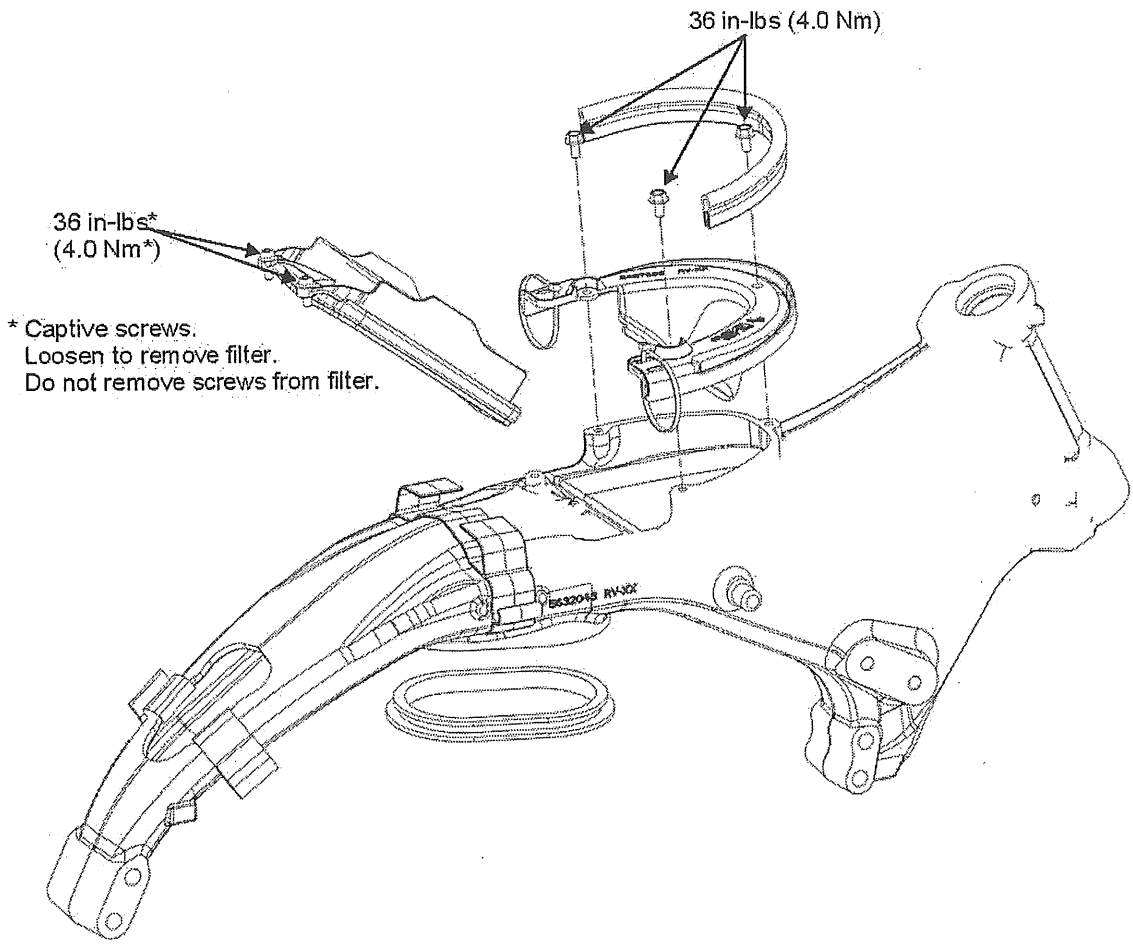

5

IDLE AIR CONTROL ASSEMBLY VIEW

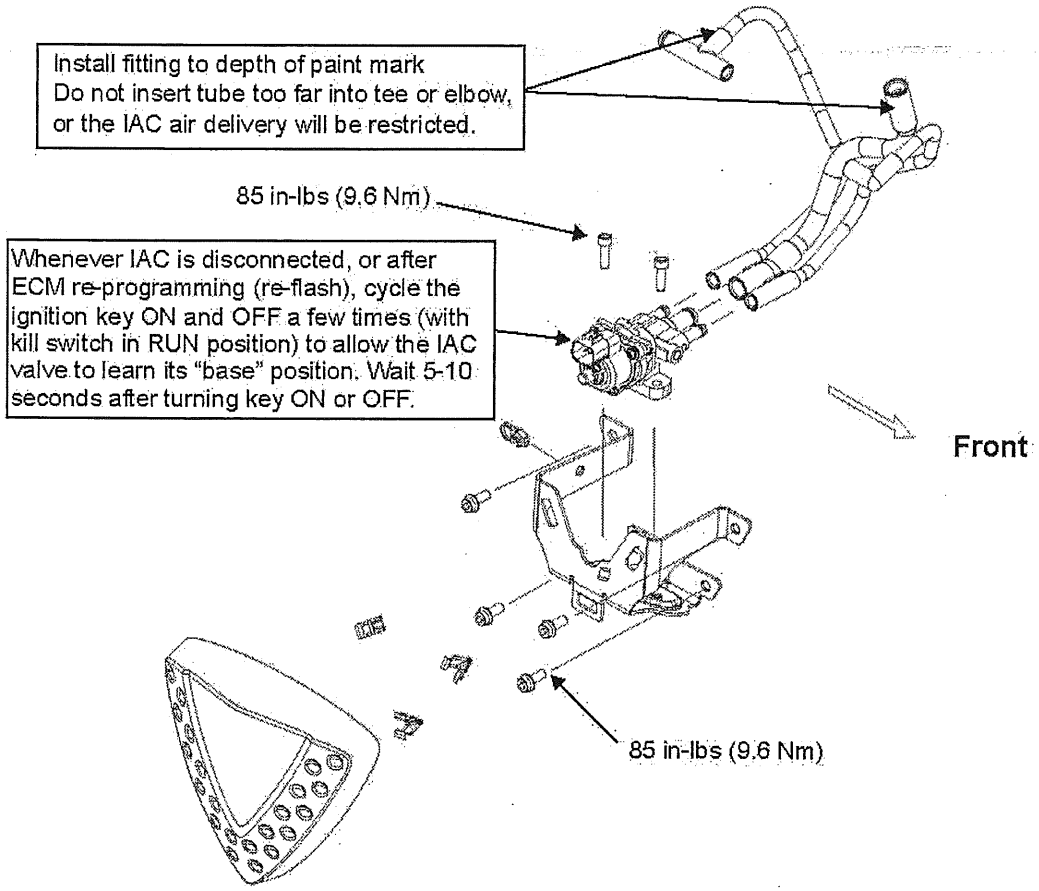

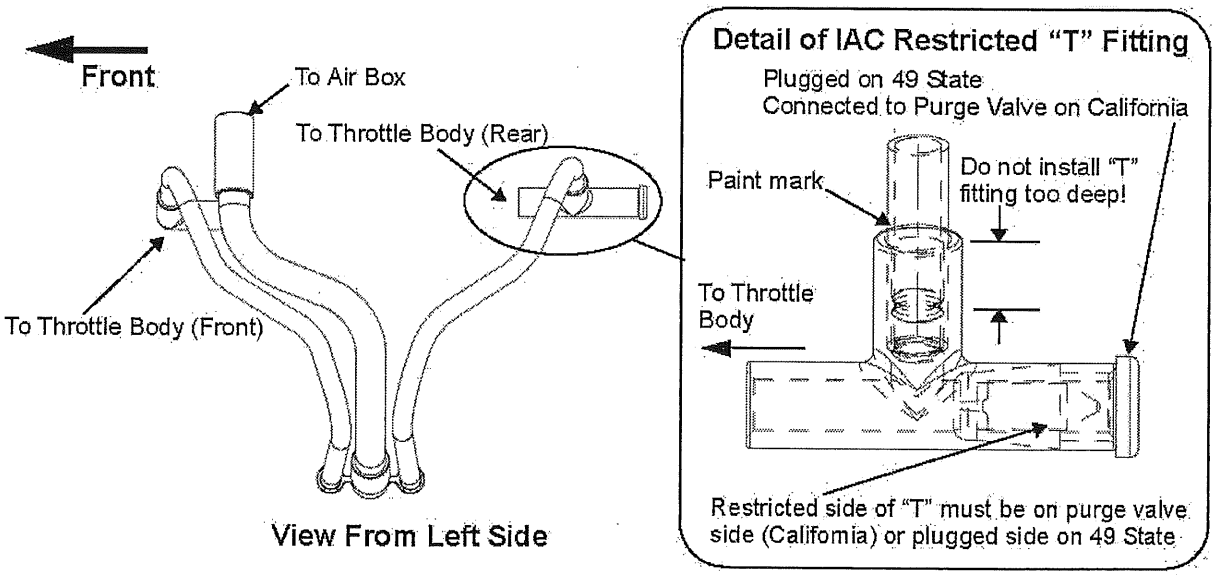

FUEL SYSTEM SERVICE

FUEL SYSTEM DEPRESSURIZATION

⚠ WARNING

Allow engine and exhaust to cool completely before disconnecting fuel line or removing tank. Wear eye protection.

NOTE

Two different Fuel Tank Fitting Plug tools have been used with Victory Motorcycles. To determine which tool must be used, the fuel pump outlet fitting must be measured with a caliper. Refer to Fuel System Service Tools at the beginning of this chapter for size specifications.

1. Remove IAC cover.
2. Wrap a clean shop towel around fuel line fitting.
3. Squeeze both release buttons (one on each side of fitting) and hold; carefully slide fitting from fuel rail.
4. Cover fuel fittings to keep debris out of line.

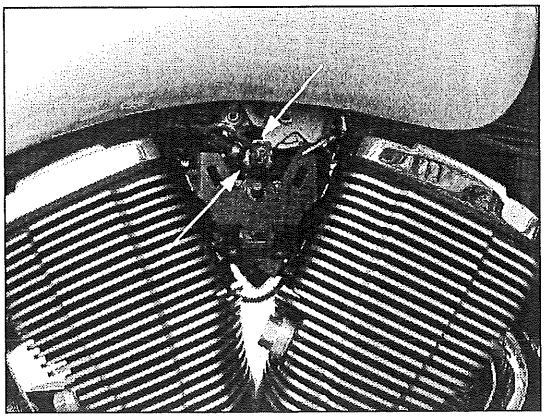

PRIMING THE FUEL SYSTEM

Fuel pump prime procedure also serves to center the IAC valve. The fuel level in tank must be high enough to submerge the fuel pickup in the tank. A prime procedure should be performed:

- If a new fuel pump is installed or if tanks are run completely dry.
- Whenever fuel system is serviced (fuel line is disconnected).
- Whenever battery or IAC is disconnected.

1. Fill the fuel tank.
2. Turn Engine Stop switch OFF.
3. Turn ignition key ON.
4. Turn stop switch to RUN.
5. Allow switch to remain in RUN position until pump stops running (about 2-3 seconds).
6. Turn stop switch OFF.
7. *WAIT* until the ECM centers the IAC valve (the clicking sound stops) and then *wait an additional 10 seconds.* or until you hear a faint single "click" from the relay.
8. Repeat Steps 4-7 about 5 times to complete the priming procedure. Turn ignition key OFF when priming is complete.

FUEL TANK VENT INSPECTION - 49 STATE

1. Disconnect vent hose (A) under seat.
2. Be sure hose is unobstructed to tank fitting and to drain line (B) to atmosphere.

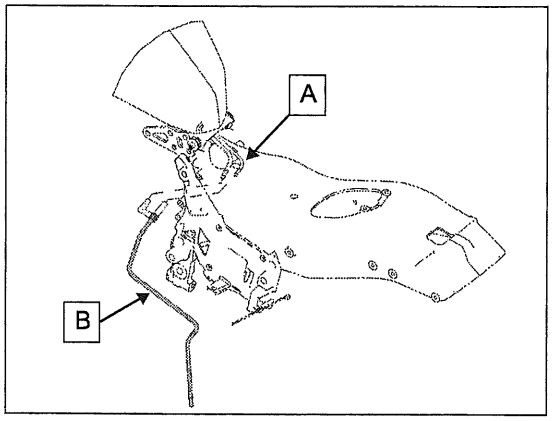

FUEL TANK VENT INSPECTION - CALIFORNIA

1. Disconnect vent hose (C) under seat.
2. Be sure both hoses (C, to tank) and (D, to EVAP canister) are unobstructed.

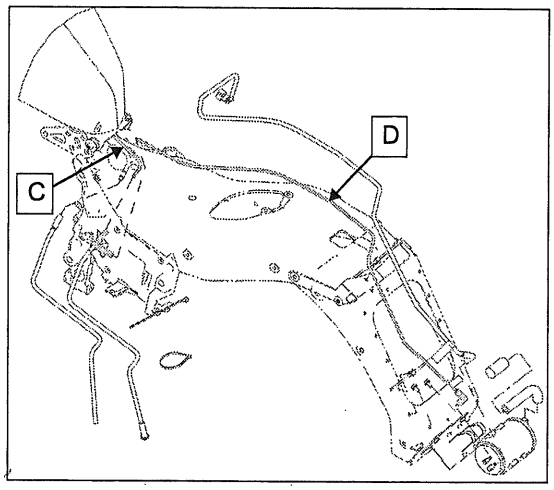

FUEL TANK REMOVAL

⚠ WARNING

Review gasoline warnings on FUEL SAFETY PRECAUTIONS, page 5.3 . Allow engine and exhaust to cool completely before disconnecting fuels line or removing tank.

NOTE

The fuel line is secured to the main wiring harness by a tie strap. The fuel line must be disconnected from the fuel pump fitting (A) before removing the tank. Do not cut or remove tie strap.

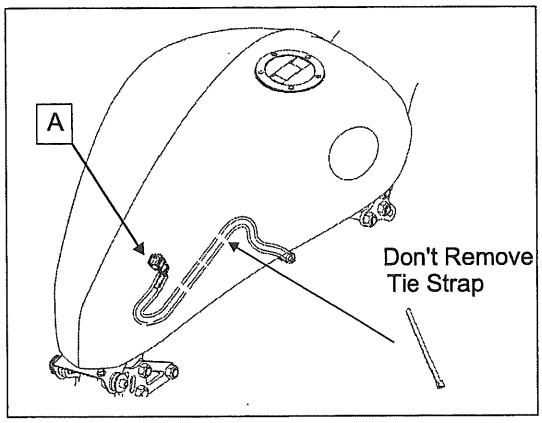

1. Remove side covers and seat. See Side Cover Removal, page 3.27 and Seat, page 3.27.
2. Disconnect vent line and water drain lines (C).

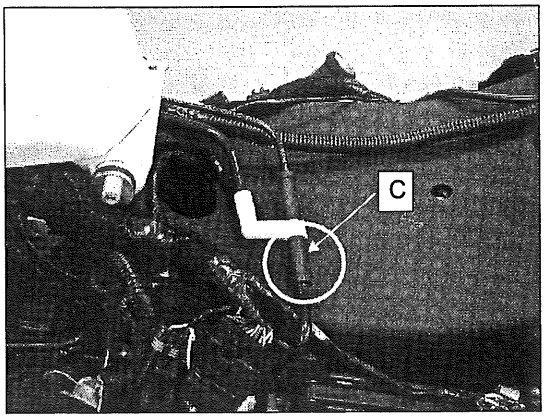

3. Remove ground wire bolt (D) and rear tank bolts (E) and collect flange bushings (F) and isolators (G).

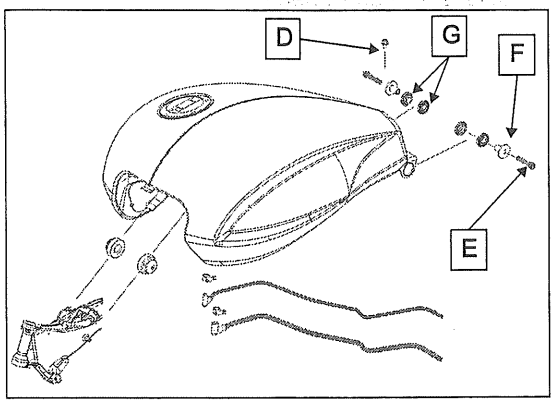

4. Secure handlebars in the straight ahead position. Place a protective cloth on front of tank to prevent damage.
5. Pivot rear of tank up to gain access to fuel line/fuel fitting. Support rear of tank.
6. Reach under tank and locate pump harness electrical connector. Carefully lift tab (H) and disconnect harness.

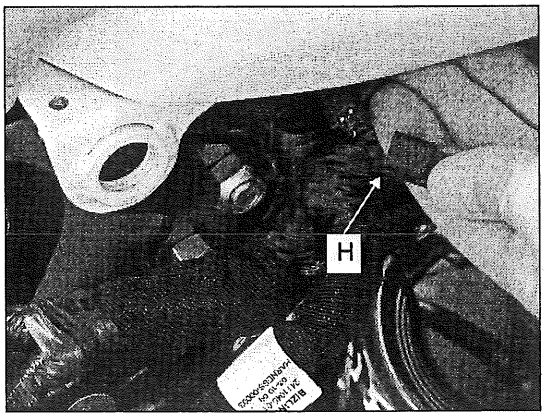

CAUTION

Fuel Tank Removal: DO NOT move tank rearward prior to disconnecting fuel line. To disconnect the fuel line fitting located on the bottom of the tank, lift up rear of tank allowing tank to pivot on front isolators. The fuel line is secured to the main wiring harness by a tie strap that should not be removed.

7. Disconnect fuel line from pump by squeezing release tabs (I) on both sides of the fitting. Pull fuel line straight down off pump fitting.

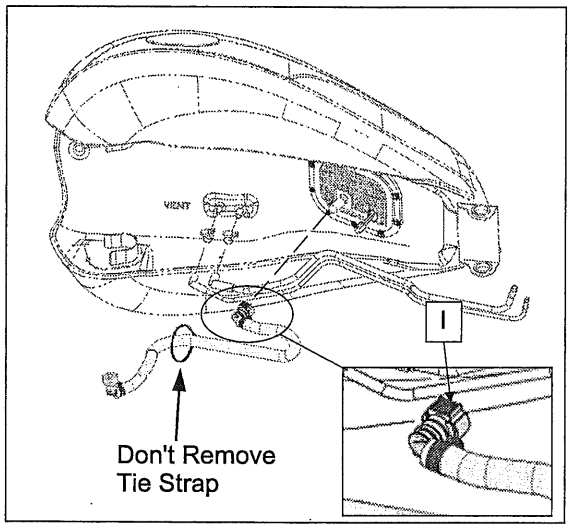

8. Install fuel tank fitting plug tool (see Special Tools for application details) onto fuel pump fitting to protect the fitting and prevent fuel for seeping out of tank.

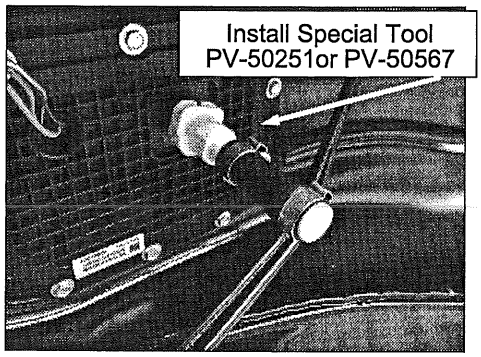

9. Grasp tank at front edge. Lift rear of tank high enough for fitting on fuel pump and special plug tool to clear the frame.
10. Carefully pull tank rearward to release front tank mounts from front isolators.
11. Place tank on suitable flat surface that will not scratch fuel tank. Do not place fuel tank on frame/ seat area of the motorcycle.

FUEL TANK INSTALLATION

1. Secure handlebars in the straight ahead position. Place a protective cloth on front of tank to prevent damage.
2. Carefully place fuel tank on motorcycle frame. Be careful not to snag or catch special fuel tank plug tool or fuel tank fitting on frame of vehicle.
3. Assemble vent and drain lines to tank (if removed).

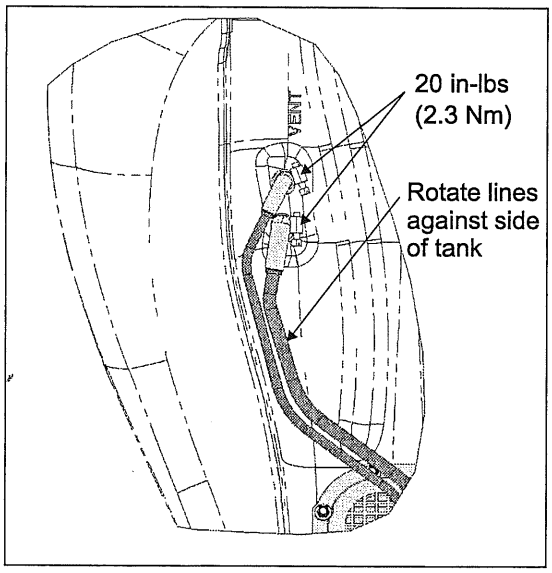

4. Assemble front isolators to frame. Apply alcohol, soapy water solution, or rubber lubricant to ease tank installation.
5. Slide tank onto front isolators and slide tank fully forward. Pivot rear of tank up to gain access to fuel line/fuel fitting. Support rear of tank.
6. Remove fuel tank fitting plug tool from fuel pump fitting by pressing in on center button of the plastic coupler.
7. Connect fuel line to fuel pump. Push fitting straight onto pump fitting until it clicks in place. You will hear a noticeable clicking sound when the fitting engages properly. Pull lightly to be sure fitting is fully installed.
8. Connect fuel pump wire harness electrical connector.

9. Verify fuel line is routed and secured properly before lowering tank.

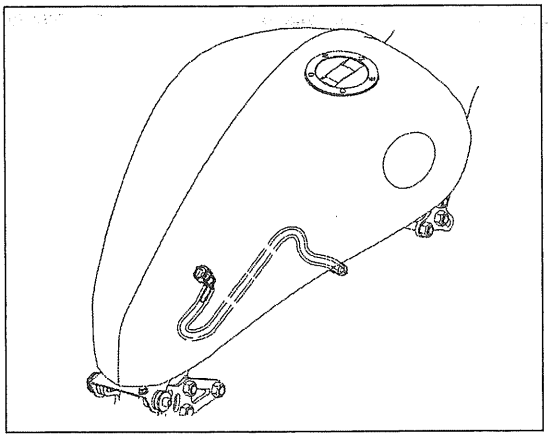

10. Install rear isolators (flange side to tank) and flange bushings.
11. Lower rear of tank and install bolts.
12. Torque fasteners to specification. Ref. "A" below.

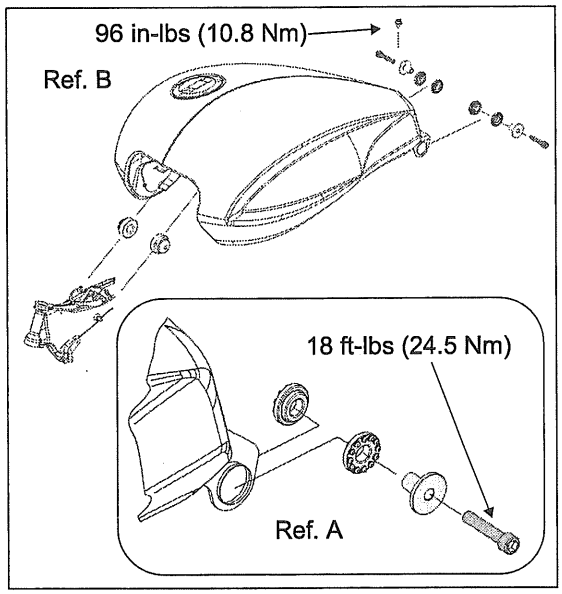

13. Connect vent drain, and ground wire. Torque to specifications. Ref. "B" above.

TORQUE
Fuel Tank Ground: **96 in-lb (11 Nm)**

14. Install seat and side covers.

FUEL PUMP REMOVAL

⚠ WARNING

Replace all mounting screws and pump seal O-ring any time pump is removed for service or fuel filter maintenance. Review gasoline warnings on FUEL SAFETY PRECAUTIONS, page 5.3. Do not kink or bend fuel pickup hose upon removal.

⚠ CAUTION

Be careful when removing and installing the fuel pump to avoid damage to pump, wiring, or hoses. Follow pump removal and installation procedure. Inspect wires and hoses for damage after removing pump. Be sure pickup filter is positioned properly (between the baffle plates at rear of tank) to prevent fuel starvation at low fuel levels.

1. Drain fuel from fuel tank using a vacuum or siphon pump designed for fuel systems. The level fuel sensor float arm is located in the left side of the fuel tank. Careless use of a pump or siphon hose could damage the float arm or sensor.
2. Remove fuel tank (Fuel Tank Removal, page 5.19).
3. Place a clean, soft protective cloth on a work bench or flat surface.
4. Lay tank on cloth with pump facing UP. Be prepared to contain any fuel spillage as a small amount of fuel will remain in the tank.
5. Loosen all mounting screws evenly in a cross pattern until all are loose. Remove all screws and discard.
6. Remove vent line and drain line.
7. Lift FRONT EDGE of pump upward until resistance is felt.

8. Push hose at front edge of pump away from edge of tank opening (A) to gain more clearance for pump removal.

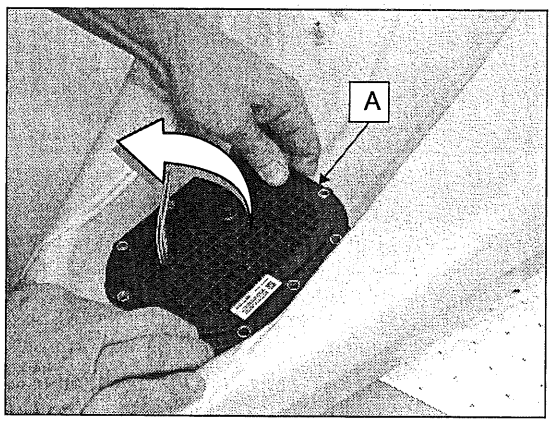

9. Lift front of pump upward until wires and hose are clear of pump opening. Push tab (B) of fuel level sensor connector in and slide apart to separate connector.

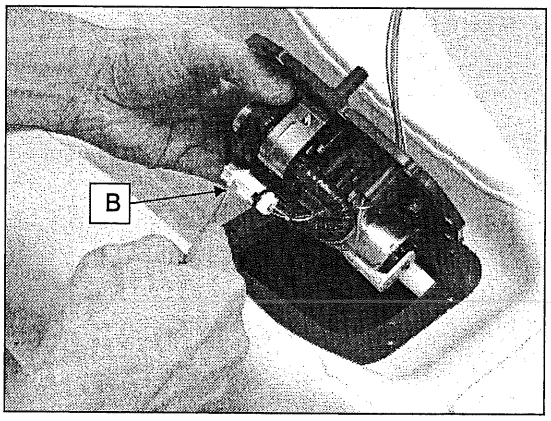

10. Carefully remove pump, being careful not to bend or kink the fuel pickup hose.

11. Inspect wires and hoses for damage.

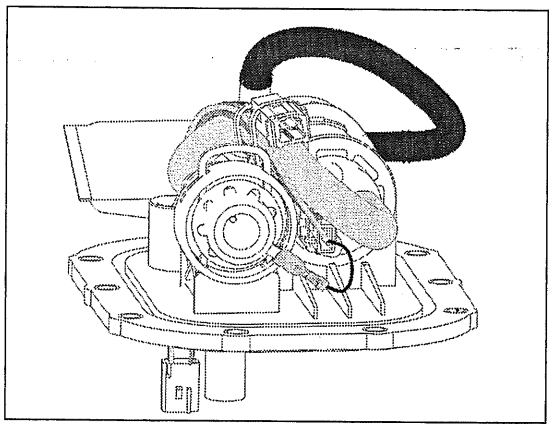

FUEL FILTER REPLACEMENT

NOTE

Careless removal of fuel pump pickup filter can damage the pump. Use care and work carefully, following all instructions.

Filter Removal

1. Remove fuel pump (Fuel Pump Removal, page 5.21).
2. Using a machinist's scribe, or a similar pointed tool, loosen the push nut by *carefully* prying it open on the alignment post. Do not remove push-nut before opening the tabs or the post may be damaged.

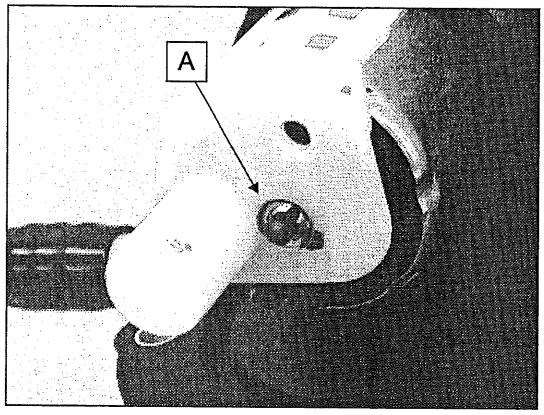

3. Remove the push-nut being careful not to damage or break alignment post (A).

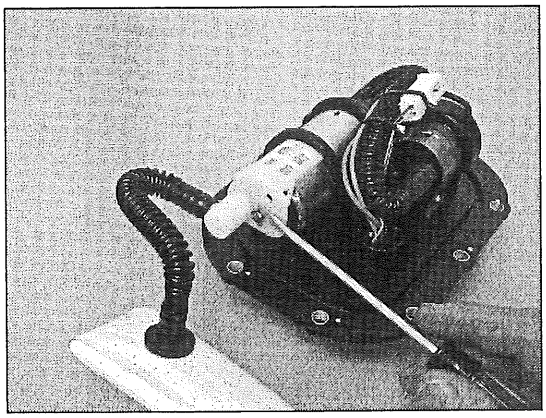

4. Push and hold retainer tab (B). Using a small flat screw driver, gently pry the connector plate off the inlet fitting of pump (C), prying as close to the fitting as possible.

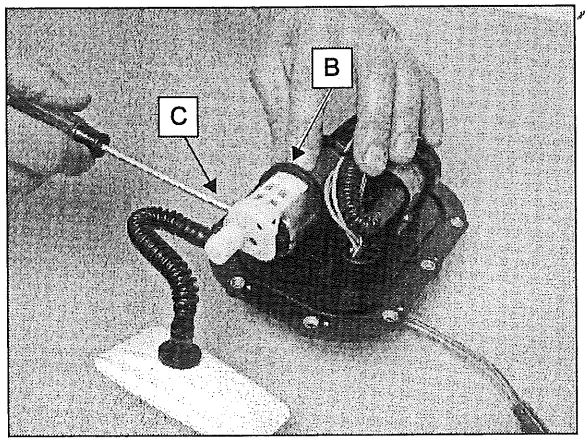

Filter Installation

5. Push the new filter straight onto the inlet fitting while guiding retainer tab (D) under the fuel pump mounting ring *Apply firm pressure to be sure the filter is seated completely against the pump before installing push-nut.*

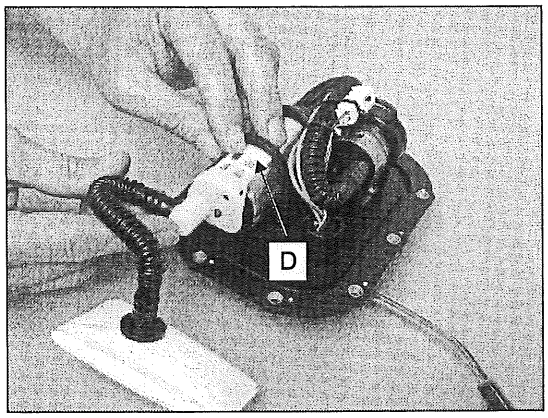

6. Install a new push-nut from the filter kit onto the alignment post, making sure it is firmly seated against the connector plate against the filter plate.

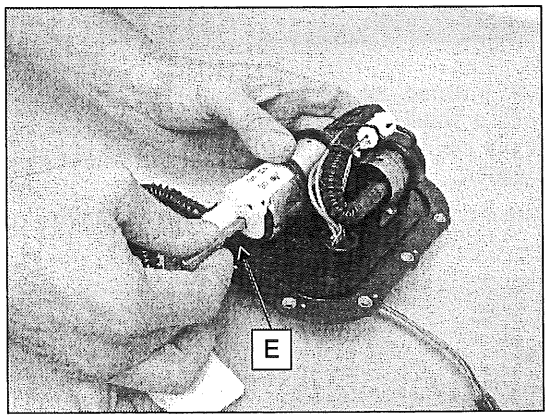

FUEL LEVEL SENSOR REMOVAL

1. Remove fuel pump (Fuel Pump Removal, page 5.21).
2. The sensor assembly is mounted on a bracket on the left side of the fuel tank and retained by a tab on the center bar of the fuel sensor body. Below is a cutaway view showing the sensor mounted to the bracket with the tank upright in a normal position.

CUTAWAY VIEW OF SENSOR

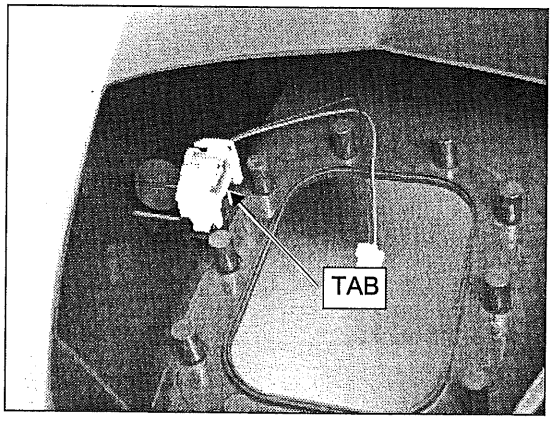

3. With tank inverted as shown, use a machinist's scribe with a small hook or a small screwdriver to *carefully* pry the *center* of the bar outward until lock tab is released.
4. Push sensor off mounting bracket and remove it from the tank.

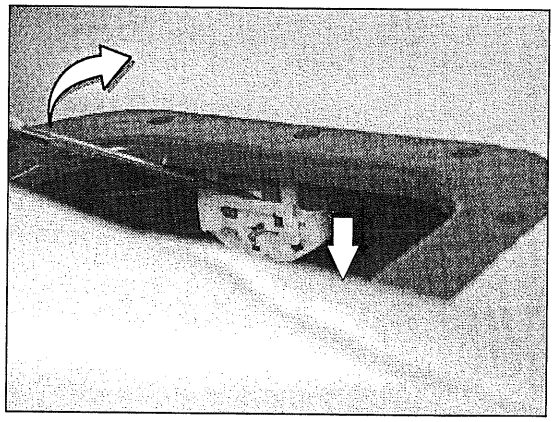

FUEL LEVEL SENSOR INSTALLATION

1. Orient sensor as shown and place in tank opening.

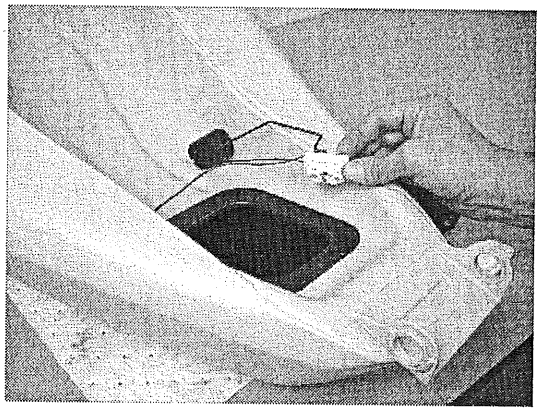

2. Slide sensor onto bracket and push until tab engages bracket. Pull downward lightly on sensor to be sure sensor tab is locked into bracket.

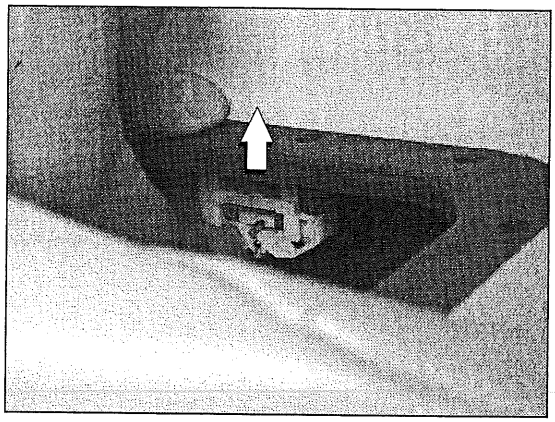

3. Install fuel pump (Fuel Pump Installation, page 5.25).

FUEL PUMP INSTALLATION

1. Install a NEW O-ring on the pump mounting flange by pressing it firmly into groove of pump flange, making sure it is not twisted
2. In checking the position of the wires and protective hose jacket, the wires should not extend past the curve in the hose (located on the outside). If the wires need adjusting, route them toward the inside of the hose, as shown (A) to prevent damage during pump installation.

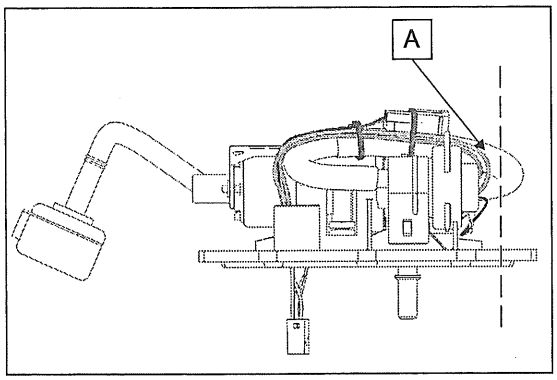

3. Clean sealing surface of tank (B) and inspect closely for scratches or surface damage that would prevent the O-ring from sealing properly.
4. Install pickup end of pump first, guiding filter between baffle plates located at the back of the tank.

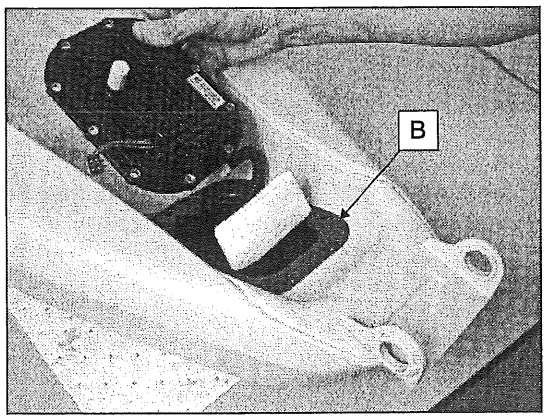

5. Below is a cutaway fuel tank shown to illustrate filter placement described in Step 4. The two views show the correct and incorrect pump installation.

CUTAWAY VIEWS
VIEWS ARE FROM FUEL CAP AREA LOOKING TOWARD REAR OF TANK ON TOP SIDE.

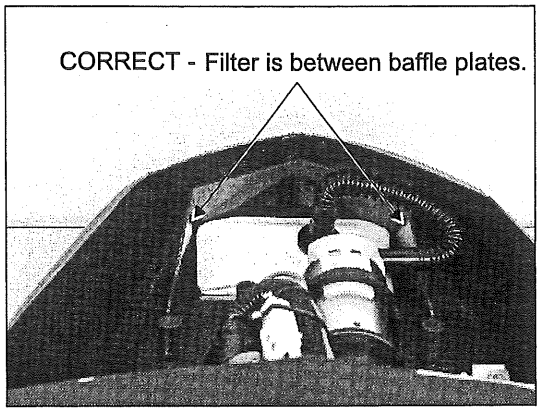

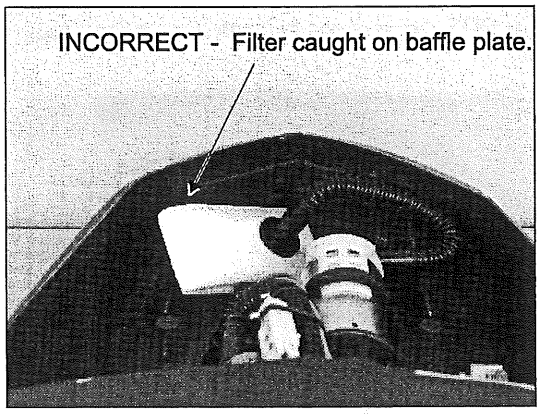

6. Connect fuel level sensor harness (C).

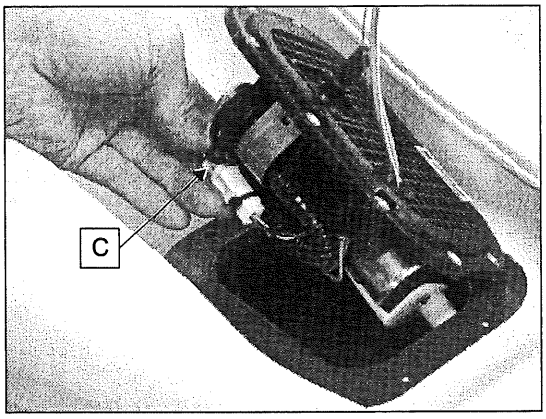

5

7. Set rear edge of pump flange on mounting surface.
8. Before final pump installation, use light to look at the baffle area of the tank (D) as shown. If the filter is visible it is caught on the tank baffle (see photo previous page). Slide pump forward slightly and move filter toward center of tank (between the plates) or remove pump and reinstall properly.

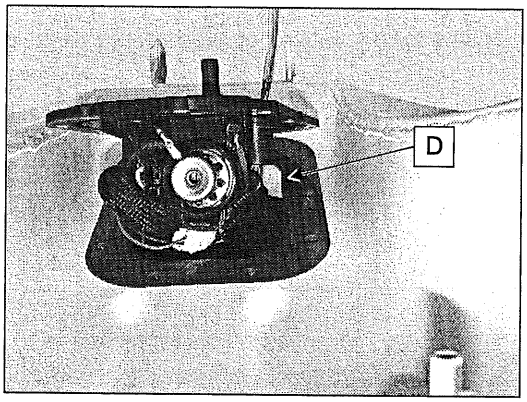

9. If filter is NOT visible, proceed with installation Step 10.

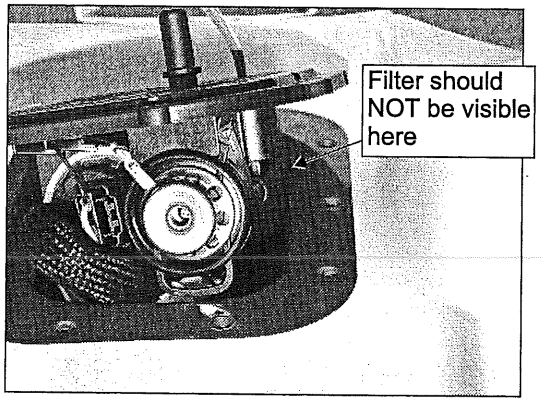

10. Push level sensor wires into tank and clear of hose.

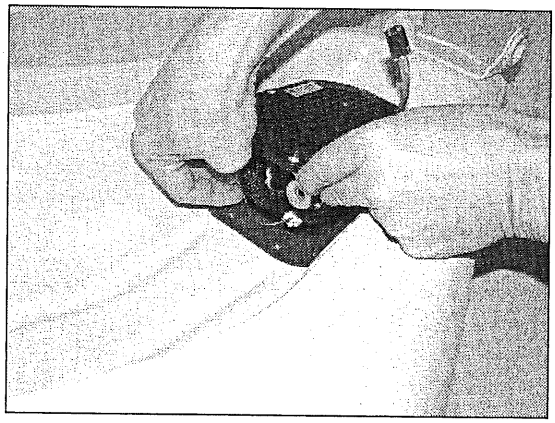

11. Push hose back slightly with index finger while pushing downward on front edge of pump flange. Apply enough force to slip hose past front edge of tank opening. Be sure O-ring is still in place after installation.

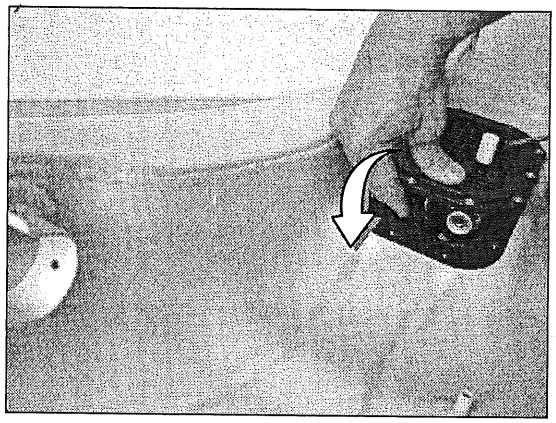

12. Start all NEW pump mounting screws in each hole, then tighten all screws evenly finger tight.

13. Torque in 3 steps to specification following the star pattern shown below. Repeat final torque one time.

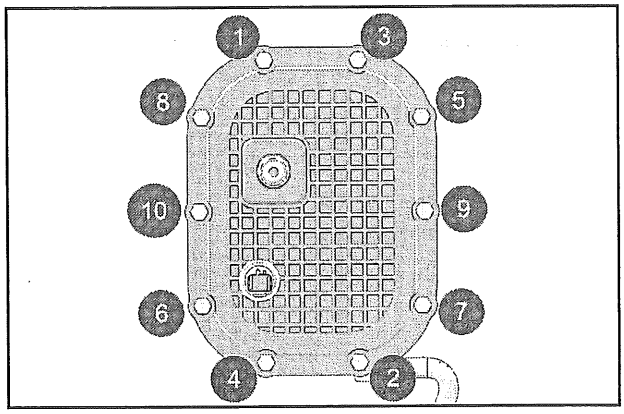

TORQUE
Fuel Pump Mounting Screws: **43 in-lb (5 Nm)**

14. Add fuel. Check for leaks at flange area before installing fuel tank (Fuel Tank Installation, page 5.20).

FUEL PUMP CIRCUIT DIAGRAM

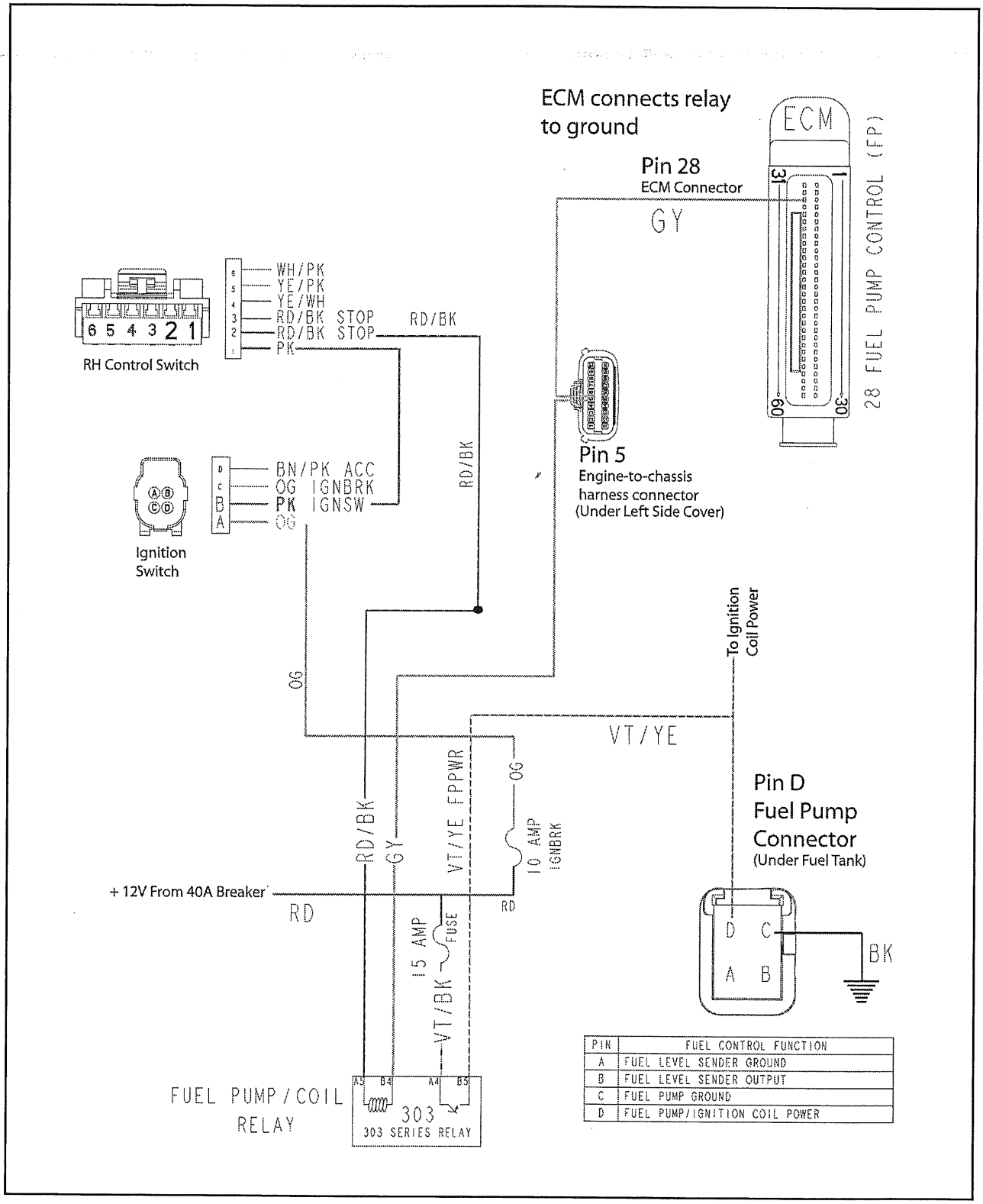

PIN	FUEL CONTROL FUNCTION
A	FUEL LEVEL SENDER GROUND
B	FUEL LEVEL SENDER OUTPUT
C	FUEL PUMP GROUND
D	FUEL PUMP/IGNITION COIL POWER

FUEL PUMP PRESSURE INSPECTION

⚠ WARNING

Gasoline is extremely flammable and is explosive under certain conditions. Work in a well ventilated area. Open flames, sparks and cigarettes must be kept away from gasoline. KEEP GASOLINE OUT OF THE REACH OF CHILDREN!

CAUTION

Wear safety glasses or a face shield when working around the fuel system to protect your eyes.

1. Disconnect fuel line at fuel rail (Fuel System Depressurization, page 5.17).
2. Attach Fuel Pressure Gauge Adaptor PV-48656 to fuel line and to fuel rail.
3. Screw Fuel Pressure Gauge PU-43506-A to fitting on adaptor.
4. Start engine and record fuel pressure (or cycle key and Engine Stop switch to read pressure when pump cycles for 2-3 seconds).
5. Turn ignition switch off.
6. Open bleed valve to de-pressurize gauge and drain residual fuel.
7. Disconnect adapter. Re-connect fuel line to rail, pushing straight inward until quick connect fitting "clicks" securely in place. Pull lightly to ensure fuel line is secured.

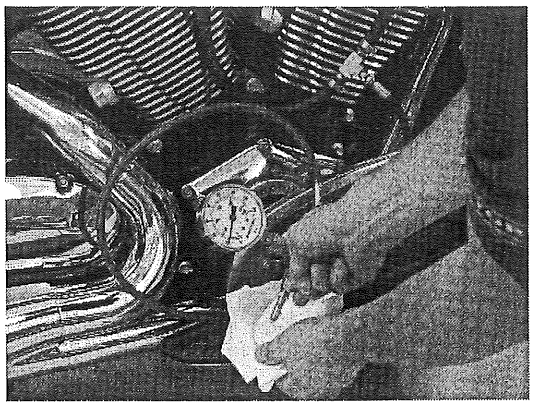

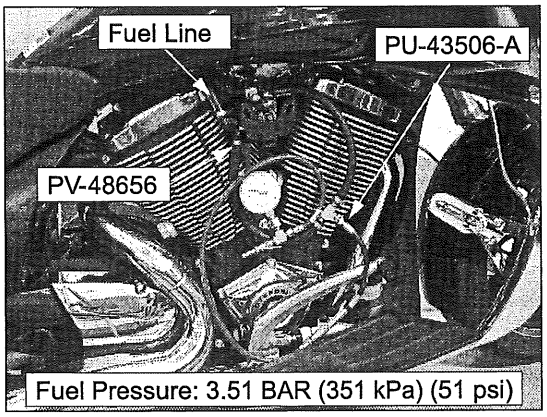

5

Fuel Pressure Troubleshooting

FUEL PRESSURE TOO LOW: INSPECT	FUEL PRESSURE TOO HIGH: INSPECT
* Low fuel level (add fuel) * Pump not running (Fuel pump or circuit malfunction) * Restricted fitting, fuel supply line, or gauge adapter hose * Fuel line kinked or restricted (from tank fitting to rail) * Fuel line leaking (leaking air in or fuel out) * Vent restriction * Plugged fuel pickup filter (located in fuel tank) * Pressure regulator malfunction (located on pump) *Fuel pump malfunction (Pump should run for about 2 seconds the instant that the key switch and Engine Stop switch are turned ON)	* Plugged fuel return (in tank on pressure regulator) * Pressure regulator malfunction (located on pump)

FUEL LEVEL SENSOR RESISTANCE TEST

OVERVIEW OF OPERATION: The fuel level sensor is a mechanical float arm located inside the fuel tank. Circuit resistance determines the reading on the fuel level gauge (Cross Country) or on the fuel level bar display on the speedometer (Cross Roads). When the fuel level indicated on the fuel gauge is below 1/4 tank, a LOW FUEL warning icon lights up on the information display (Cross Country).

Follow the steps below to test the sensor circuit with an ohmmeter.

1. Remove side covers and seat. See Side Cover Removal, page 3.27 and Seat, page 3.27.
2. Disconnect vent and water drain hoses at rear of tank.
3. Remove rear tank mounting bolts.
4. Lift and support rear of fuel tank high enough to access fuel level sensor / fuel pump connector.
5. Disconnect the harness.
6. Set multimeter to measure resistance.
7. Attach meter leads to pin A and pin B of 4-pin connector out of the fuel pump. Estimate the fuel level in the tank and compare resistance reading to the table below.

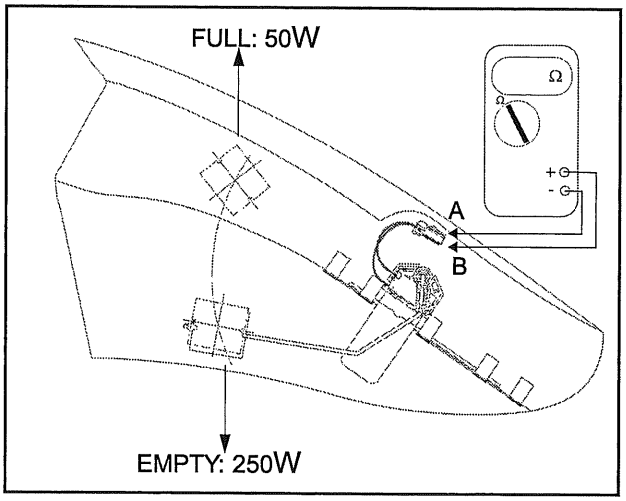

RESISTANCE MEASURED FROM PIN A TO PIN B IN 4-PIN CONNECTOR	APPROXIMATE RESISTANCE
Sensor Resistance (Room Temperature)	FULL (Sensor Arm Up) 50 +/- 3 Ω
	EMPTY (Sensor Arm Down) 250 +/- 5 Ω

FUEL LEVEL SENSOR BYPASS TEST

1. If fuel gauge is inoperative but level sensor resistance is correct, perform the following test when the connector is still unplugged.
2. Connect a 50 Ohm (minimum) resistor across Pin A and Pin B on the *harness* side of the fuel pump connector (connect Black/Dark Green wire to Black wire).
3. Turn ignition key ON and engine stop switch to RUN.
4. The fuel gauge should indicate between FULL and empty depending on the resistor value used for testing.

NOTE
At least 50 Ohms should be installed in series with Pins A and B. Connecting Pin B directly to Pin A or to chassis ground will set an error code.

5. If gauge does not function, check continuity of Black wire (Pin A) to ground. Resistance should be less than .5 Ohms. If ground is OK, check all pin connections in the fuel pump connector and the gauge connector (in headlamp or fairing) and verify good continuity of BK/DG wire to the gauge connector.

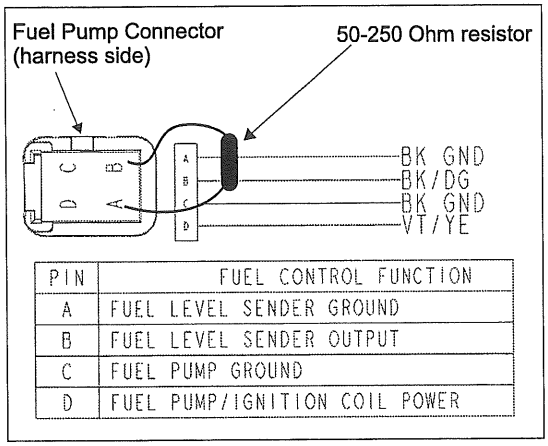

PIN	FUEL CONTROL FUNCTION
A	FUEL LEVEL SENDER GROUND
B	FUEL LEVEL SENDER OUTPUT
C	FUEL PUMP GROUND
D	FUEL PUMP/IGNITION COIL POWER

ERROR MESSAGE (CROSS ROADS)

If the fuel level sensor is disconnected, an error message will be displayed on the speedometer information screen.

MES-SAGE	SCREEN	INDICATES
ERROR	Fuel Level	Fuel sensor disconnected / shorted

FUEL PUMP ELECTRICAL DIAGNOSTICS

Fuel System Specifications

Fuel Pump Pressure	3.51 BAR (351 kPa) (51 psi)
Fuel Pump Volume (@ 12VDC)	60 liters/hr (500 ml / 30 seconds) (16.9 oz. / 30 seconds) (0.26 gal / min)
Fuel Pump Current Draw	5 amps maximum @ 13.5 VDC

NOTE

When ignition switch is turned ON and Engine Stop switch is in the RUN position, fuel pump will run momentarily (about 2-3 seconds). Key or Engine Stop switch must be turned *OFF for at least 5 seconds* before fuel pump will cycle again (there may be an audible click as the relay re-sets). Fuel pump will not cycle again if switch is turned on and off quickly. NOTE: If the ECM reprogramming procedure was interrupted or failed due to low battery voltage, the ECM could have lost critical startup information. If you notice the fuel pump does not run with key / stop switch cycle immediately after reprogramming the ECM, connect a battery charger and re-program the ECM with a stock fuel map and start over.

FUEL PUMP SUPPLY VOLTAGE TEST

1. Disconnect fuel pump / level sensor harness (as described on Fuel Level Sensor Resistance Test, page 5.30 for level sensor test).

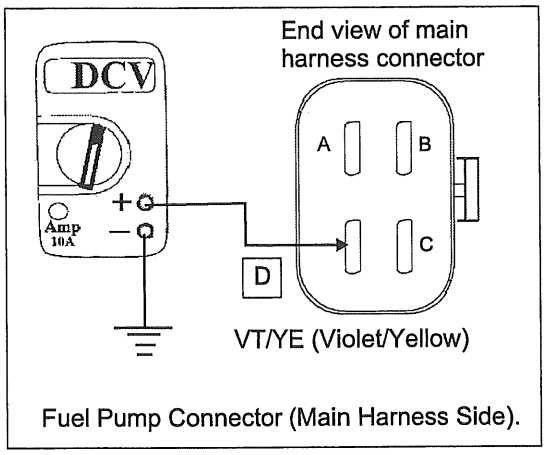

Fuel Pump Connector (Main Harness Side).

5

2. Connect red lead of a DC volt meter to Pin D on the *wire harness* side of the connector. Connect black lead to chassis ground (or to Pin C of connector).
3. Turn Engine Stop switch to RUN.
4. Turn ignition key ON and read DC voltage on meter when key is first turned on. Voltage reading on pin D (Violet/Yellow) should be close to battery voltage for 2-3 seconds after turning key ON.
5. If low or no voltage is delivered to the fuel pump, verify ground wire (Pin C, Black) has good continuity to chassis ground and back to battery negative (-) post.

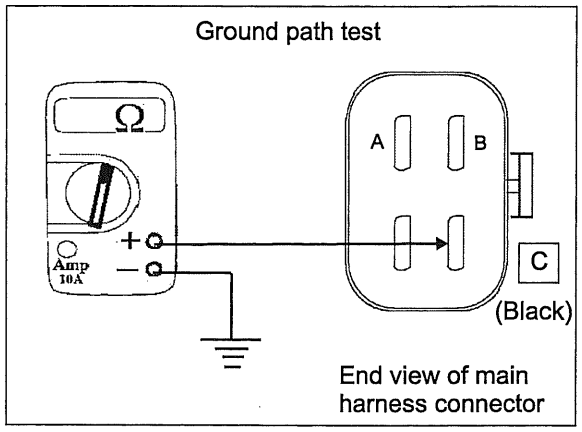

6. If ground is OK, check Gray wire from fuel pump relay to Pin 5 of the Engine-Chassis harness connector, and from there to ECM pin #28. The Gray wire receives a momentary ground from the ECM (for 2-3 seconds) and activates the fuel pump relay which supplies power to the pump on the VT/YE wire.
7. Trace both power and ground circuits to determine fault if battery voltage is not present for 2-3 seconds after key and kill switch are turned on.
8. When a CPS signal is received by the ECM (engine is cranking or running) the ECM maintains the ground on Pin 28 (Gray wire), keeping the pump powered.

BATTERY VOLTAGE TO FUEL PUMP

⚠ CAUTION

The following procedure powers the fuel pump circuit directly. Read and understand the entire procedure before you begin.

1. Check fuel pump fuse (A, below). If open (blown) visually inspect circuit wiring for shorts to ground and then perform fuel pump current draw test on Fuel Pump Current Draw Test, page 5.33.
2. If fuse is OK, remove fuel pump relay (B).

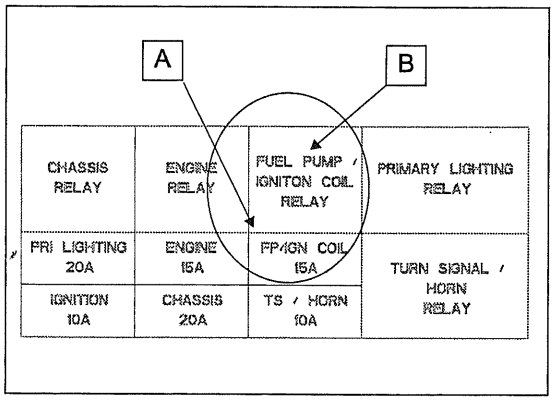

3. Use a test light or a DC voltmeter to verify battery voltage is present on Violet/Black (VT/BK) wire on relay terminal A4. NOTE: Battery voltage should be present regardless of key switch position.

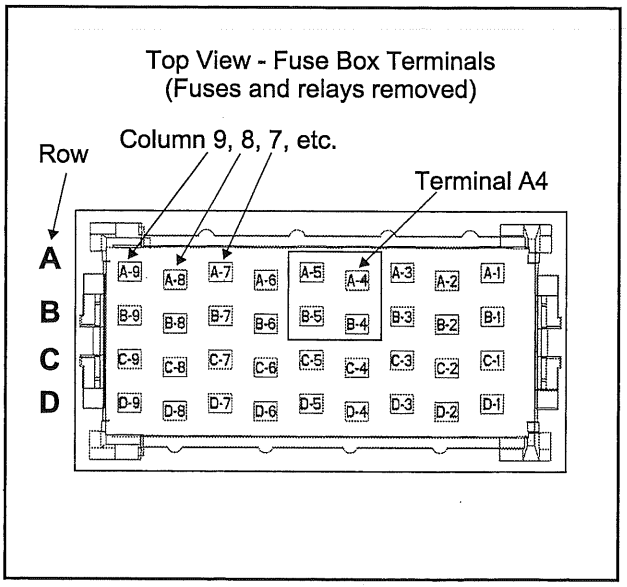

4. If power is present, insert PU-49466 Relay Jumper into relay socket (the tool is non directional and can be installed either way). If PU-49466 is not available, an ammeter can also be used as in Current Draw Test (Fuel Pump Current Draw Test, page 5.33).

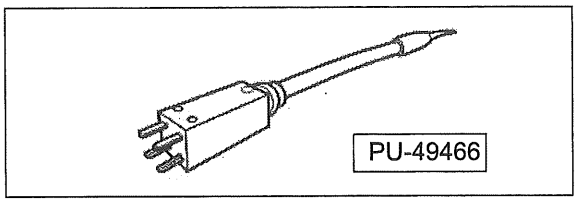

⚠ CAUTION

A jumper wire can also be used to connect terminal A4 and B5 to run the pump, however, be careful not to apply power to the Gray wire terminal B4, or ECM damage will occur. Do not power a dry fuel pump or pump damage could result from overheating. Pump must be in tank, submerged in fuel, and connected to fuel rail.

5. If pump runs when powered directly in Step 4, swap fuel pump relay with accessory relay, turn ignition key ON and engine stop switch to RUN. If pump runs when key/stop switch is cycled, replace faulty relay.
6. If pump *does not* run with relay swapped and Key/Stop switch cycled (but ran in Step 4 with the jumper installed) check for battery voltage on Red/Black wire (RD/BK) terminal A5 of pump relay socket. NOTE: The key must be ON and the engine stop switch set to RUN.
7. If there is no battery voltage on terminal A5 (with ignition key ON and Engine Stop switch to RUN) refer to the wiring schematic to trace power path through ignition switch and Engine Stop switch.

NOTE

If starter motor circuit works, key and kill switch are not suspect. Check continuity of RD/BK wire from kill switch (Pin 2) to pump relay.

8. If battery voltage is present on terminal A5, turn key and stop switch OFF.
9. Check continuity of gray wire from pump relay (terminal B4) through engine harness connector (Pin 5) to ECM Pin 28. The ECM grounds the pump relay through pin 28 for 2-3 seconds when key and engine stop switch are first turned ON. The ECM maintains the ground connection after engine start-up (after a CPS signal is present). Ground the Gray wire to bypass the ECM ground for testing (Key and stop switch ON).

FUEL PUMP CURRENT DRAW TEST

OVERVIEW: Fuel pump current draw is an indicator of pump condition. Perform draw test if fuel pump operation is suspect, or if fuel pump fuse is found open (blown).

NOTE

When meter leads are inserted the pump will run, and current draw will be displayed on the meter, even with key and stop switch off. Fuel tank must be completely installed and have enough fuel in it to cover the fuel pickup filter for an accurate test.

Be sure fuse of your ammeter is not open (blown). To check ammeter fuse, place leads in the normal + and - jacks and turn selector to W (resistance) position. Place free end of red (+) meter lead into 10 Amp socket as shown below. Meter should read approximately .2 Ohms. A reading of OL indicates an open fuse.

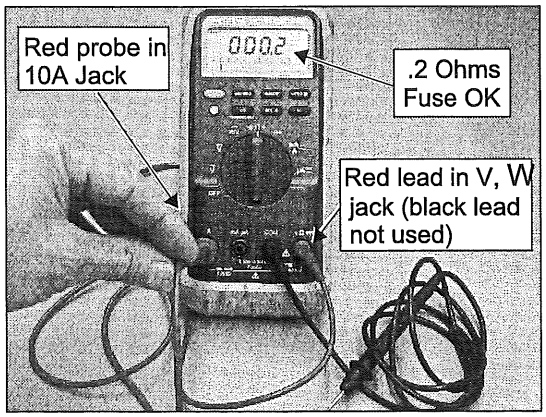

Checking Ammeter Fuse

1. Remove right side cover. Lift tab at top of fuse box base and slide fuse box up to remove it from bracket. Remove cover.
2. Remove fuel pump relay (A) by pulling straight upward.

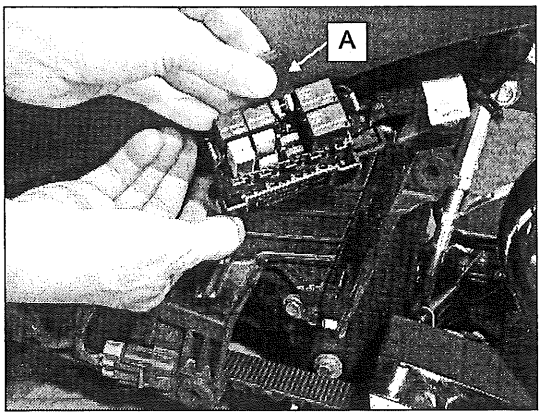

5

3. Set meter to DC Amps. Be sure red meter lead is in the 10A jack, and black meter lead is in common (-) jack.
4. Insert red meter lead in terminal A4 and black meter lead in terminal B5 of relay socket. NOTE: The fuel pump will run regardless of key / stop switch position.

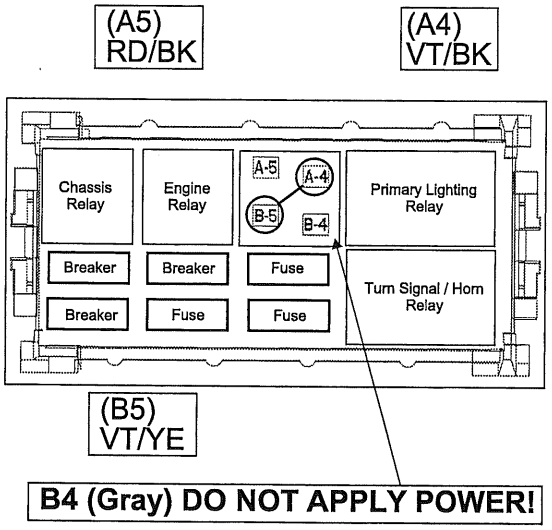

5. Read fuel pump current draw on meter and compare to specification.

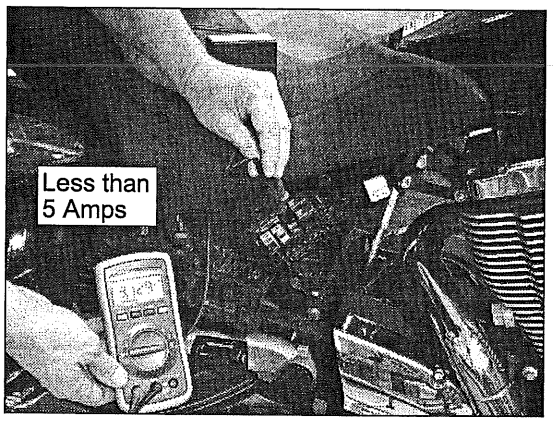

6. Inspect fuel pump circuit wiring if pump does not run.
7. Replace fuel pump if current draw exceeds specification.

SPECIFICATION: Fuel Pump Current Draw Maximum: 5 DC Amps

IDLE AIR CONTROL REMOVAL

Also refer to IAC Assembly View on Idle Air Control Assembly View, page 5.16.

1. Remove RH cover and IAC cover.
2. Remove wire dart (A).
3. Push tab (B) to disconnect IAC harness.
4. Remove (4) IAC bracket screws (C) using a 5mm ball drive hexagonal socket.

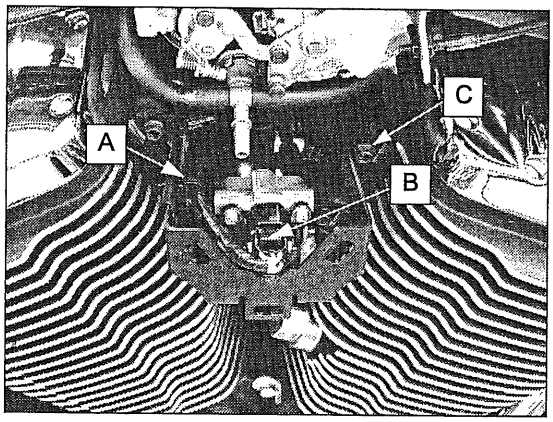

5. Remove high tension leads (D) from coils.

NOTE

The front HTL is routed *behind* the ignition switch cover, not above it upon assembly.

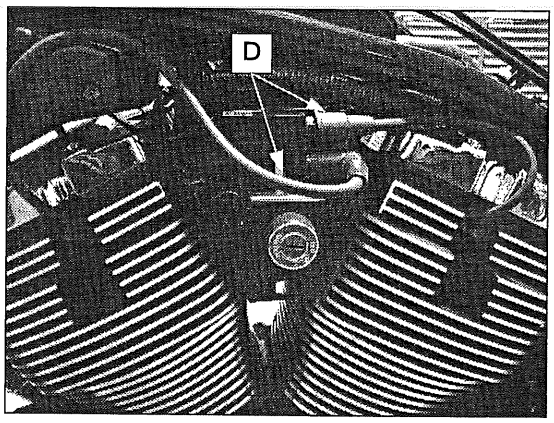

6. Remove (4) bracket screws with a 5mm ball drive hexagonal socket.

7. Lift tab of primary wire harness connector to detach it from the ignition coil.

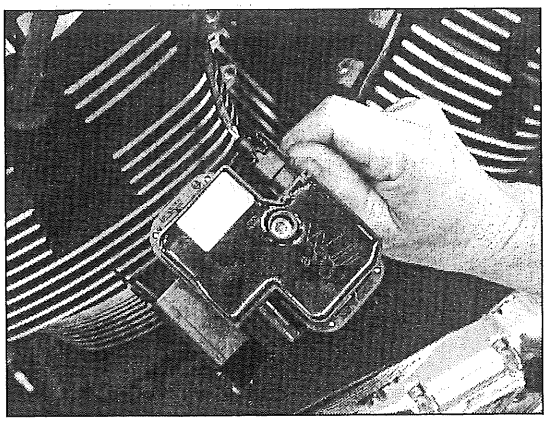

8. Push tab on ignition switch connector and remove bracket with switch attached.
9. Remove air supply hose from air box, the front air delivery hose, and the rear air hose with "T" fitting from throttle body.

NOTE

Restricted side of tee fitting faces purge valve on California models. On 49 state models, the restricted side of the tee fitting is plugged (E).

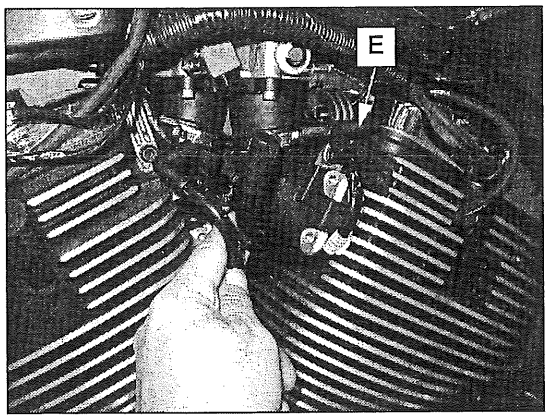

THROTTLE BODY REMOVAL

NOTE

This operation requires the removal of the Throttle Position Sensor (TPS). Upon reassembly, the TPS will need to be recalibrated to its base setting using Polaris Digital Wrench®. TPS base setting voltage, with throttle closed, should read between .80V - .92V.

1. Using Polaris Digital Wrench®, access the vehicle diagnostic system and record the TPS voltage with the ignition "ON" and the throttle fully closed.

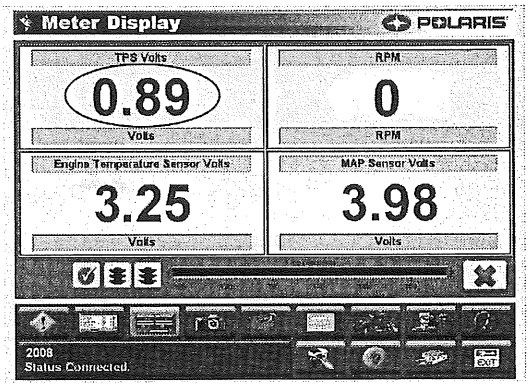

2. Remove fuel tank.
3. Remove IAC cover and ignition switch cover.
4. Remove ignition switch, coil and bracket from LH side of the motorcycle followed by IAC valve and bracket from RH side.
5. Disconnect and remove TMAP sensor.
6. Position a shop towel around the fuel line quick-connect and disconnect from fuel rail.

⚠ WARNING

Review Gasoline Warnings at the beginning of this chapter. Allow engine and exhaust to cool completely before disconnecting fuel lines or removing tank.

7. Disconnect cruise control cable from throttle reel and unclip cable from bracket.

5

8. Remove outer jam nuts at both throttle cables.

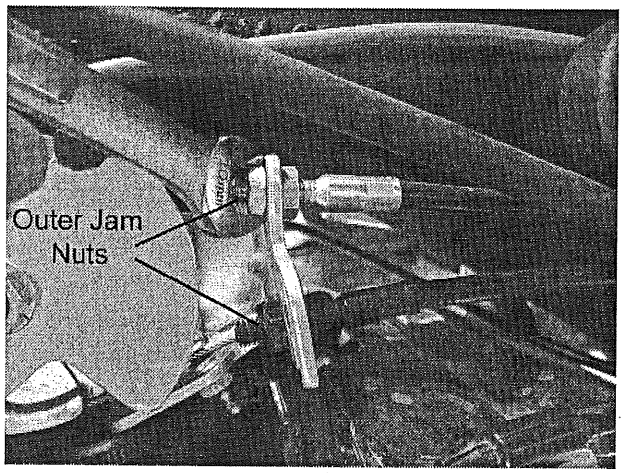

9. Rotate throttle reel to access phillips head screws (2) and remove.

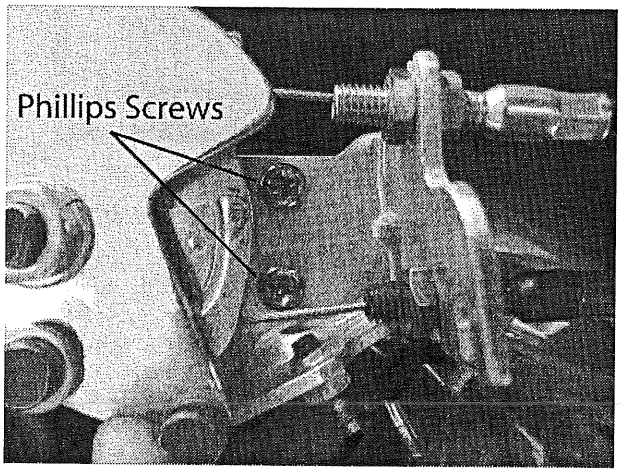

10. Remove throttle cable bracket.

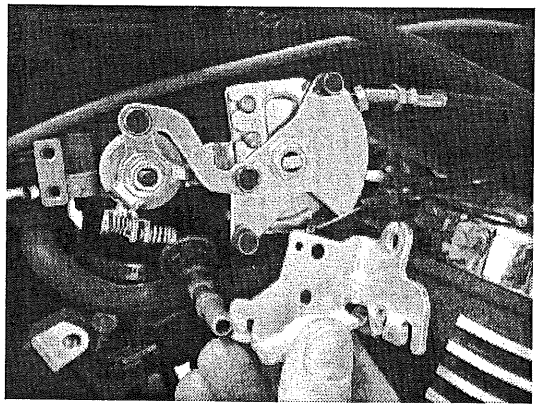

11. Disconnect throttle cables from throttle reel and move out of the way.
12. Slide IAC pipes off of front and rear of throttle body.
13. Using a T25 Safety Torx bit, remove screw securing TPS to throttle body and withdraw TPS sensor from throttle body.
14. Using a 5mm ball-drive hex socket, remove the (4) bolts securing the throttle body to the intake manifold.
15. Working from the RH side of motorcycle, withdraw throttle body assembly from motorcycle.

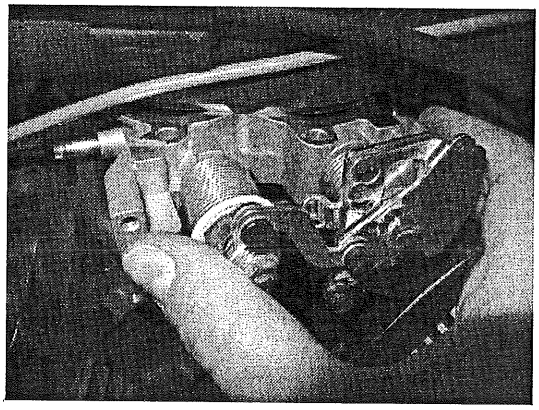

THROTTLE BODY INSTALLATION

NOTE

Replace upper and lower throttle body seals prior to installation. Use extreme care not to fold, tear or damage seals when sliding throttle body back into position.

1. Press throttle body adapter plate upwards into airbox seal approximately 1/4" to ease throttle body installation.

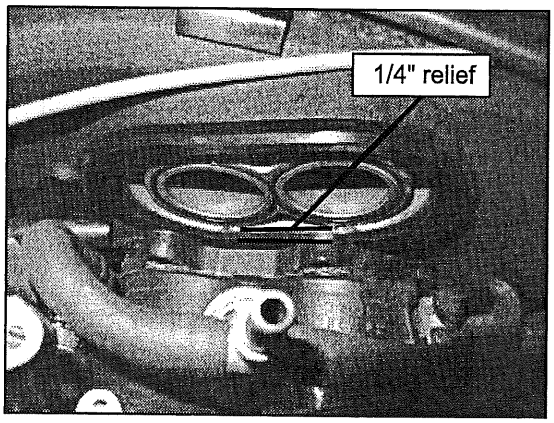

2. Working from the RH side of motorcycle, carefully slide throttle body into position, making sure not to damage or displace throttle body seals.

3. Install throttle body bolts (4) and torque to specification.

TORQUE
Throttle Body Bolts: **85 in-lb (9 Nm)**

4. Install throttle cables, cruise control cable and check cable free play (Throttle Cable Inspection / Lubrication, page 2.12).
5. Install TMAP sensor, TPS sensor.
6. Install IAC valve and refit IAC pipes, paying close attention to rear "T" fitting pipe depth (see Idle Air Control Assembly View, page 5.16 for proper IAC pipe installation procedure).
7. Install fuel tank, seat and side covers.
8. Attach ignition coil and ignition switch electrical connectors and let assembly hang, leaving access to TPS sensor.
9. Turn the ignition ON, connect Polaris Digital Wrench® and slowly rotate TPS sensor until voltage matches the reading taken in step 1 of THROTTLE BODY REMOVAL. Once the voltage reading is set, torque the TPS screw to specification. The TPS is now calibrated.

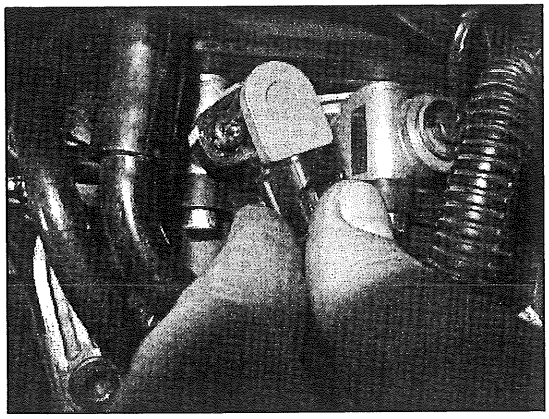

TORQUE
TPS Screw: **10 in-lbs (1 Nm)**

TPS Voltage base setting @ closed throttle:
0.80V - 0.92V

10. Install ignition switch / coil assembly.
11. Install IAC and Ignition switch covers.
12. Start engine and check for air leaks, trouble codes and proper throttle operation.

5

EFI SYSTEM COMPONENTS

FUEL INJECTION COMPONENT LOCATIONS

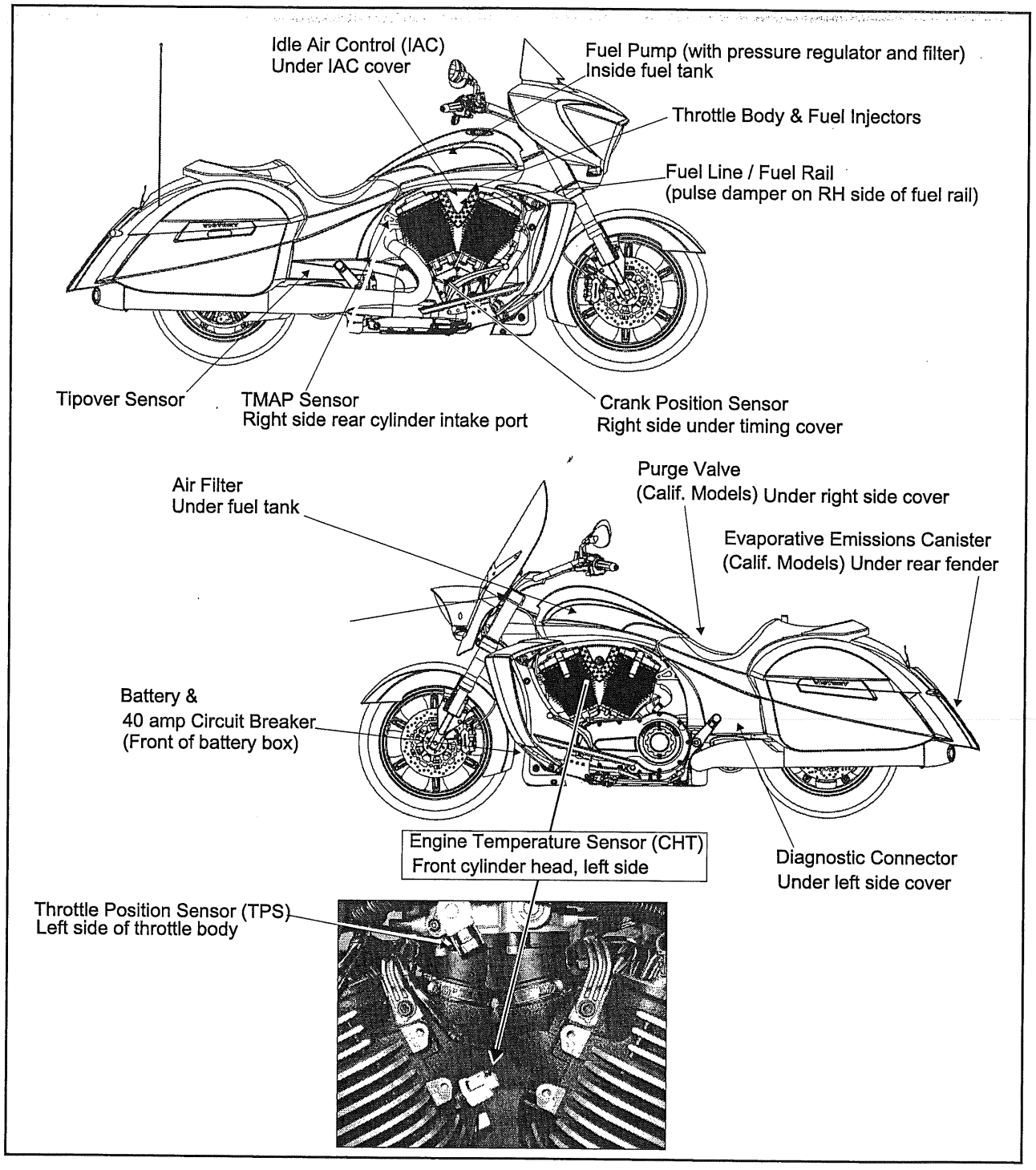

FUEL RAIL / FUEL INJECTOR REMOVAL

1. Remove fuel tank (Fuel Tank Removal, page 5.19).
2. Remove ignition coil with bracket and IAC bracket assembly with hoses (Idle Air Control Removal, page 5.34).
3. Remove fuel rail screws (A) and four intake manifold screws (B).

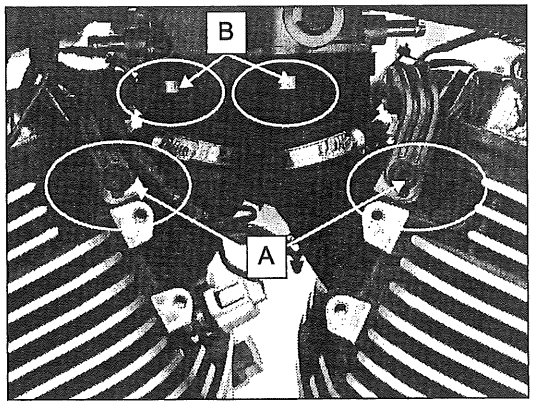

4. Remove throttle cables from throttle body bracket.
5. Push throttle body and air box seal up into frame to provide as much clearance as possible for injector removal.
6. Cut tie strap that secures injector wire harness to fuel rail. Slide red lock tab from each injector harness connector.

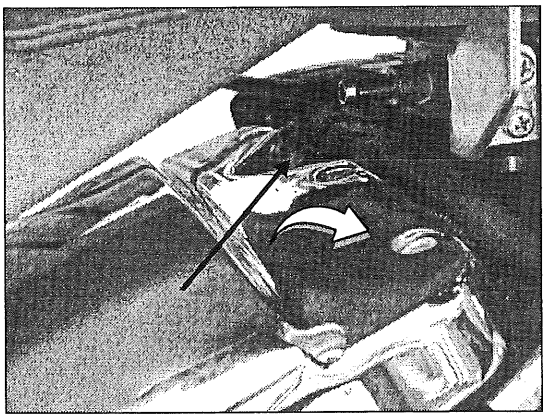

7. Press tab to remove harness from each injector.
8. Slide fuel rail retaining clip back until rail is released from injector, or remove them completely.
9. Lift fuel rail off injectors and remove rail from right side.
10. Cover exposed ends of injectors and fuel rail with plastic wrap to prevent contamination.
11. Clean area around injectors with compressed air to prevent foreign material from entering engine. Pull injectors out of cylinder heads; keep in order (front and rear) for assembly.

FUEL RAIL INSTALLATION

1. Lubricate O-rings with engine oil. Install front injector with wire harness connector facing forward.
2. Install rear injector with wire harness connector facing rearward.
3. Press firmly to seat injector and remove protective cover.
4. Install retainer clips fully onto each injector. Be sure clips are fully seated in the groove.

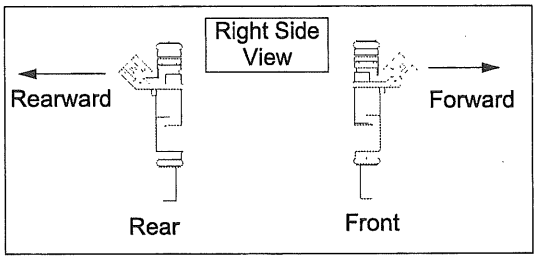

5. Align injectors and install fuel rail and place in position on top of injectors. Press rail over each injectors evenly until retaining clips "click" into place on the rail. Be sure rail is seated completely and clips are engaged in the groove.
6. Install fuel rail retaining screws and torque to specification.

TORQUE
Fuel Rail Screws: **85 in-lb (10 Nm)**

7. Install wire harness on each injector and then install the red locking tabs.
8. Secure wires to fuel rail with new tie straps.
9. Assemble remaining parts in reverse order and prime the fuel system (Priming The Fuel System, page 5.17).

OXYGEN SENSOR DIAGRAMS

Through 2015 Oxygen Sensor Wiring Diagram (1-Wire)

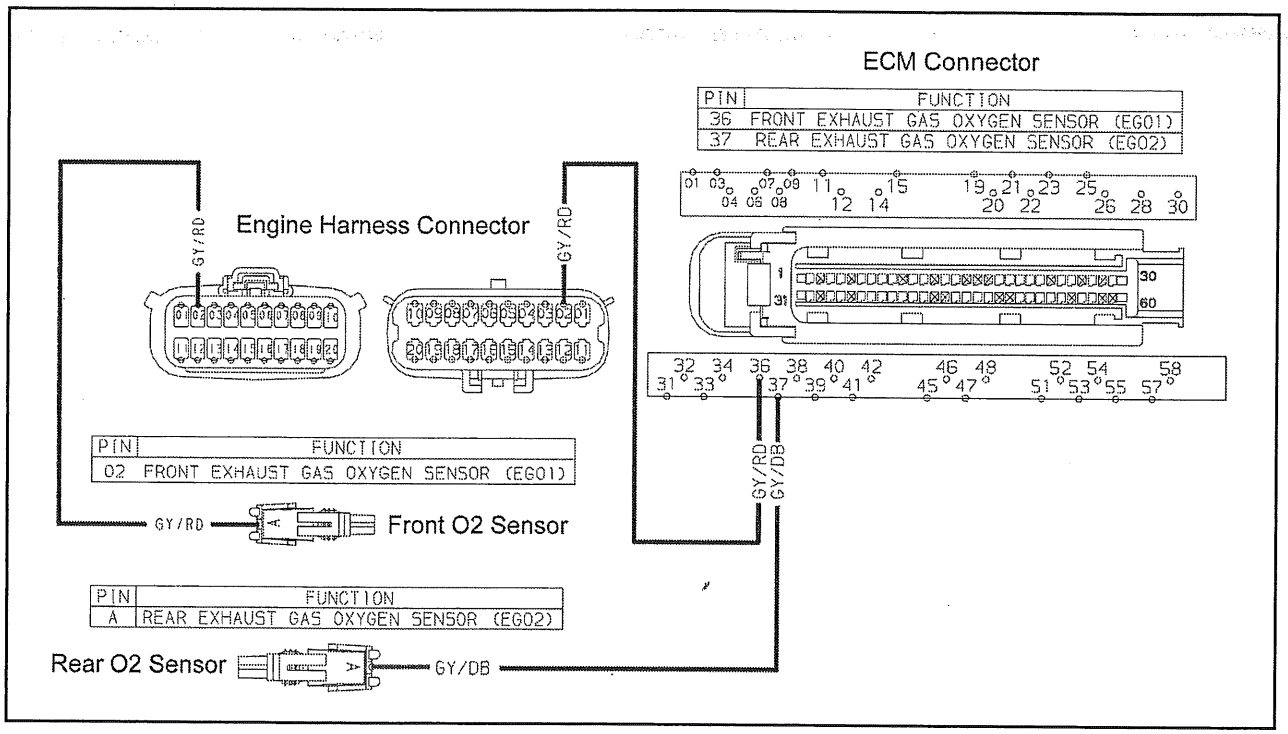

2016 Oxygen Sensor Wiring Diagram (4-Wire)

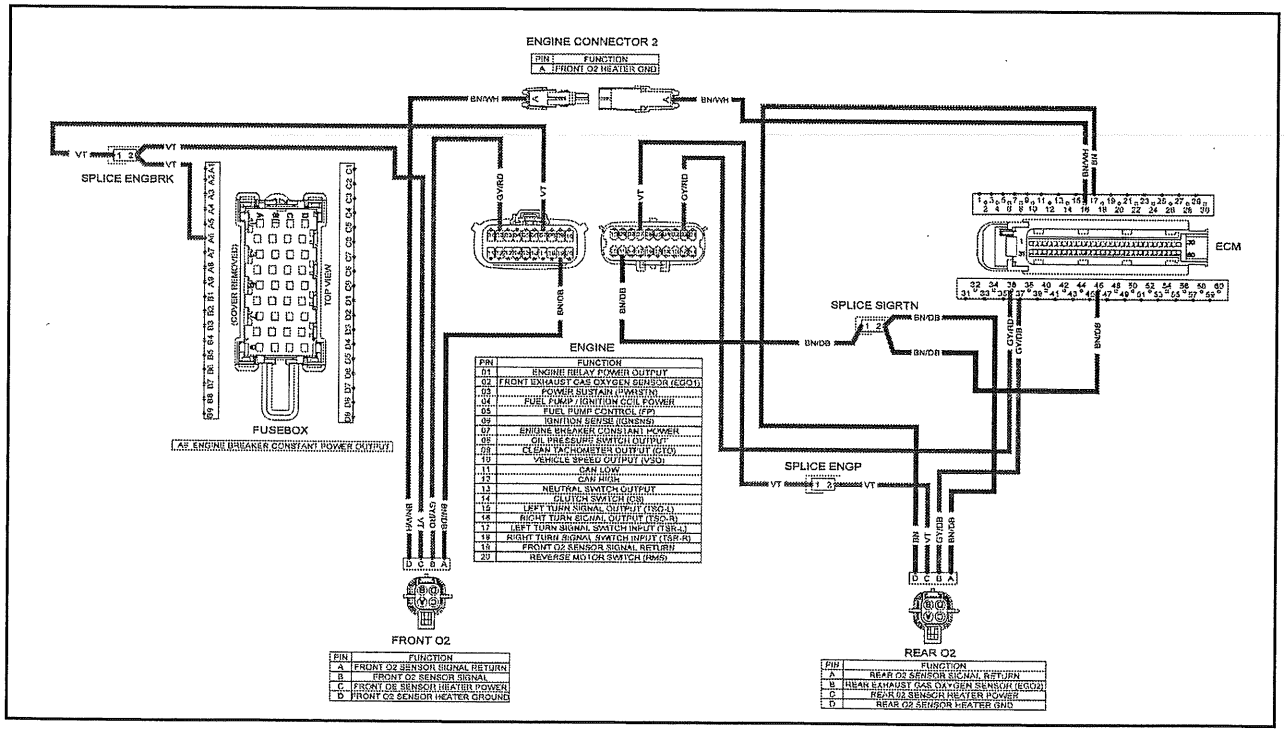

FUEL INJECTION SYSTEM TESTING AND DIAGNOSTICS

FUEL INJECTION SYSTEM - OPERATION

The Electronic Fuel Injection (EFI) system functions to provide the engine with precisely metered fuel under varying loads and conditions.

The Engine Control Module or "ECM", is located under the seat. It is programmed to provide the proper fuel and ignition timing based mainly on primary inputs of engine RPM and the Temperature and Manifold Absolute Pressure (TMAP) sensor inputs. The ECM evaluates other minor sensory information received from various sensors in the EFI system, and also provides grounds or voltage to other *EFI related* circuits of the electrical and fuel delivery systems.

A Throttle Position Sensor (TPS) is mounted on the left side of the throttle body. The TPS is not a primary input for air flow information in the closed loop system. It mainly provides "rate of change" feedback to the ECM (such as rapid acceleration) and also serves as a plausibility check for the TMAP sensor. The MAP portion of the TMAP sensor is the primary air flow and load sensing device.

An electric fuel pump, mounted inside the fuel tank supplies fuel pressure to the injectors continuously when the engine is running or cranking. A pressure regulator incorporated on the pump keeps fuel pressure steady at approximately 50 PSI (3.44 Bar). The fuel pump cycles "ON" for 2-3 seconds when the ignition key and Engine Stop switch are turned on to pressurize the system for start-up.

The fuel injectors inject fuel when they are grounded by drivers inside the ECM. The duration of the injector pulse (length of time the injector circuit is grounded) is controlled by the ECM. Pulse duration determines the amount of fuel delivered to the engine (longer cycles = more fuel). The ECM selects the correct amount of fuel injector cycle time by referencing a three dimensional fuel "map". Simplified, each reference point on the map represents a different amount of time.

Although TMAP and engine RPM are the most influential inputs for selecting a map reference point, the ECM also evaluates feedback from minor sensors in the system, to obtain a more accurate "picture" of the fuel needs at any given moment.

The locations of sensors and other EFI system related components is shown on Fuel Injection Component Locations, page 5.38.

IDLE AIR CONTROL (IAC) - OPERATION

The Idle Air Control system consists of the Engine Control Module (ECM), IAC valve, air supply hose, two air delivery hoses, and related wiring between ECM and IAC valve. (See IAC Assembly View on Idle Air Control Assembly View, page 5.16).

The IAC valve is located behind the cover on the right side of the throttle body. Its main function is to stabilize the engine's base idle speed by varying the amount of air allowed to the engine at idle and low throttle openings. Air is regulated by valves located inside the IAC valve body.

The ECM continuously monitors engine RPM and changes the position of IAC air valves (via step motors) to maintain idle speed between 850 and 1050 RPM.

Filtered air from the air box is delivered to the IAC valve body through a supply hose on the lower left side of the air box, then distributed to front and rear cylinder throttle bodies through separate delivery hoses.

IAC CYCLING - Whenever the IAC wire harness is disconnected, or after ECM re-programming, cycle the key switch on and off so the IAC valve can "learn" its position. Wait 5 seconds after turning the key ON. The system requires no scheduled maintenance beyond visual inspection of all hoses and electrical connections. NEVER attempt to "adjust" idle speed with the throttle stop screw or flow balance screw. Any tampering will require throttle body replacement. If IAC cannot stabilize the idle, look for air leaks, air restrictions, or poor electrical connections. View the Closed Loop Correction Factor data item in Digital Wrench (normal is .92-1.07). Higher numbers could indicate an IAC or inlet manifold leak.

ECM CONNECTOR MAP

Refer to ECM Connector Removal, page 5.48 to remove connector from ECM.

TOP VIEW - ECM CONNECTOR (WIRE SIDE SHOWN)
(BOOT AND WIRE COVER REMOVED)

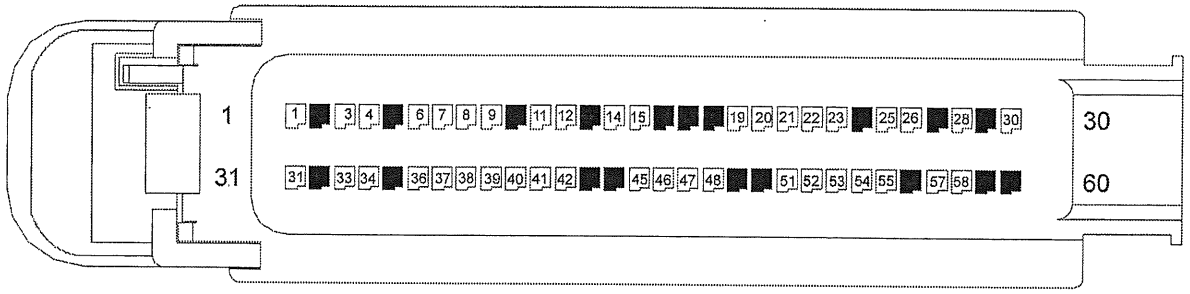

*Blacked-out pins indicate open terminals (■)

Wire Color Key - BN = Brown; DG = Dark Green; BK = Black; GY = Gray; PK = Pink; RD = Red; VT = Violet; WH = White; YE = Yellow; OG = Orange; DB = Dark Blue

ECM CONNECTOR MAP
(System related wire color & pin number shown. Refer to wiring diagram for complete connector diagram.)

Pin	Color	Function	Pin	Color	Function
1	VT / PK	VPWR	31	VT / PK	VPWR
3	WH / BK	FRONT CYL COIL OUTPUT	32	BK / OG	SIDE STAND SWITCH OUTPUT
4	WH / DG	REAR CYL COIL OUTPUT	33	BK / WH	POWER GROUND
6	DB / PK	IAST 1	34	RD / BK	IGNITION SENS
7	DB / WH	IAST 2	36	GY / RD	FRONT O2 SENSOR
8	DB / OG	IAST 3	37	GY / DB	REAR O2 SENSOR
9	DB/RD	IAST 4	38	OG / DG	INTAKE AIR TEMP
11	GY / BK	POWER SUSTAIN	39	OG / DB	CYLINDER HEAD TEMP
12	BK / WH	POWER GROUND	40	OG / WH	TIP OVER SWITCH
14	BK / DB	LEFT T/S OUTPUT	41	BK	CASE GROUND
15	BK / RD	RIGHT T/S OUTPUT	42	DG / BN	VEHICLE SPEED SENSOR
19	DB	CANISTER PURGE VALVE	45	WH	REVERSE MOTOR SWITCH
20	VT / DB	LEFT T/S SWITCH INPUT	46	BN / DB	SIGNAL RETURN
21	DG / DB	VEHICLE SPEED OUTPUT	47	YE	CAN HIGH
22	DG / WH	TACHOMETER OUTPUT	48	DG	CAN LOW
23	NOT USED	NOT USED	51	DB / YE	CLUTCH SWITCH
25	WH / DB	FRONT CYL FUEL INJECTOR	52	YE / BK	NEUTRAL SWITCH INPUT
26	WH / GY	REAR CYL FUEL INJECTOR	53	OG / YE	THROTTLE POSITION SENSOR
28	GY	FUEL PUMP CONTROL	54	OG / BN	MAP SENSOR
30	VT /RD	RIGHT T/S SWITCH INPUT	55	BN / RD	REFERENCE VOLTAGE (+5Vdc)
			57	RD	CPS POSITIVE SIGNAL
			58	BK	CPS NEGATIVE SIGNAL

SELF-DIAGNOSTIC FEATURE

The ECM used on the Victory motorcycle stores trouble codes in memory. Trouble codes are stored by the ECM when a sensor reading is outside of the normal or "plausible" range. Codes are listed and described on Trouble Codes, page 5.45. The ECM is located under the left side cover.

When a fault occurs, the ECM records a code in the "Logged Faults" memory. If a fault is currently active, the code is also recorded in the ECM "Current Faults" memory and remains until the fault is no longer occurring. If a problem is corrected, a "Current Fault" is erased, but the code remains in "Logged Faults" memory until it is manually cleared using Digital Wrench. Logged faults remain even if battery power is removed from the ECM.

Digital Wrench diagnostic software is the tool used to interface with the EFI system by coupling to a diagnostic port located under the left side cover. Whenever available, Digital Wrench should always be connected to a vehicle for more accurate problem diagnosis.

VIEWING AND CLEARING TROUBLE CODES

Trouble codes are logged in the ECM memory when a sensor or other supported system fault occurs. To view the codes, do the following:

Viewing Trouble Codes

1. Connect the Digital Wrench diagnostic software and establish communication with the ECM.
2. Select the

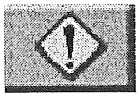

icon to display loaded trouble code(s).

3. The codes are classified as *Current or Historical.* Current codes are occurring at the moment. Historical codes are not occurring at the moment but have occurred in the past. A list of codes is on Trouble Codes, page 5.45.

Clearing Trouble Codes

4. Click on the "*Clear Trouble Codes*" icon to clear trouble codes.

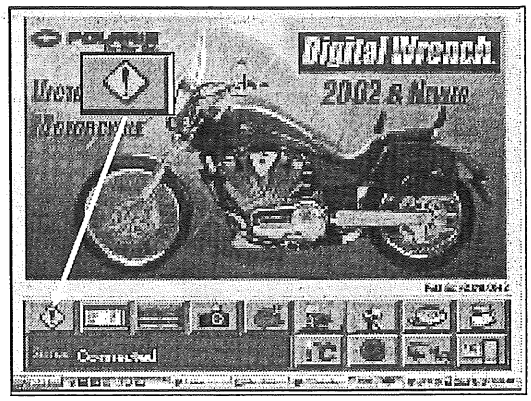

5

SENSOR DIAGNOSTICS - IMPORTANT INFORMATION TO UNDERSTAND BEFORE YOU BEGIN

If a sensor fails or reads outside a "normal" range, a "pre-programmed" (default) value is substituted by the ECM until sensor reading returns to normal.

Sensor values can be viewed in Digital Wrench® on the "Sensor Data Grid Or Graphs" screen. Since the sensor reading may either be actual feedback from the sensor OR a default value set by the EM in the event of a fault in the sensor or wiring, it is important to verify the condition of the sensor.

The check engine ("ENG") warning may or may not illuminate to alert the rider of a possible problem, depending on the system fault. Following a check engine light, perform a visual inspection to see if a cause can be determined.

Connect the Digital Wrench to see what codes are present in memory, and focus your diagnostics on that sensor and the related wiring for that circuit. (Refer to wiring diagrams for ENG light circuits.

If multiple codes are set, refer to the wiring diagram and focus your efforts on wiring and connections common to each of the sensors. Multiple sensor failure is extremely unlikely.

The sensor tests described in this section are performed at the ECM wire connector. This method ensures that the data from a sensor is reaching the ECM. Sensor tests can be performed at the sensor if easily accessible, but the wiring between the sensor and the 60 pin ECM connector should always be closely examined and tested if the sensor itself passes the test.

Poor or corroded connections are the most common cause of system faults. Always check the integrity of the male pins and female receptacles of the connectors in the affected circuit. These may include the sensor connector, the ECM connector, and any in between the two such as jumper harnesses or the Engine-to-Chassis harness 14 pin connector where applicable.

NOTE
CHASSIS TO ENGINE HARNESS CONNECTOR (14 PIN)

Some sensor tests refer to the Engine Harness Connector (A) located behind the left side.

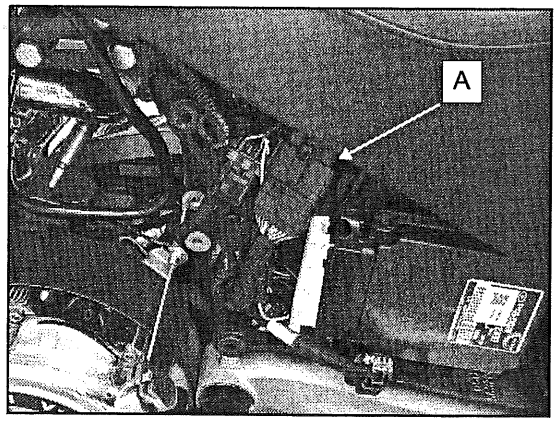

TROUBLE CODES

P-CODE NUMBER	SPN	FMI	DESCRIPTION
P0107	102	4	Manifold Absolute Pressure sensor circuit voltage low - MAP portion of TMAP sensor circuit is open, or shorted to ground.
P0108	102	3	Manifold Absolute Pressure sensor circuit voltage high - MAP portion of TMAP sensor circuit is shorted to battery voltage.
P0112	105	4	Intake Air Temperature Sensor voltage low - Temperature portion of TMAP sensor circuit is shorted to ground.
P0113	105	3	Intake Air Temperature Sensor voltage high - Temperature portion of TMAP sensor circuit is open, or shorted to battery voltage.
P0117	110	4	Cylinder Head Temperature (CHT) Sensor voltage low - circuit shorted to ground.
P0118	110	3	Cylinder Head Temperature (CHT) Sensor voltage high - circuit open, or shorted to battery voltage.
P0122	51	4	Throttle Position Circuit voltage low - TPS open, or shorted to ground.
P0123	51	3	Throttle Position Circuit voltage high - TPS shorted to battery voltage.
P0171	52020-4	17	Fuel Correction - system too lean Cyl 1 (Front).
P0172	52020-4	15	Fuel Correction - system too rich Cyl 1 (Front).
P0174	52020-5	17	Fuel Correction - system too lean Cyl 2 (Rear).
P0175	52020-5	15	Fuel Correction - system too rich Cyl 2 (Rear).
P0181C	52026-7	31	Kickstand Switch condition exists.
P0217	110	16	Engine Temperature Sensor - temperature too high.
P0231	1347	5	Fuel Pump Driver Circuit - open or shorted to ground.
P0232	1347	3	Fuel Pump Driver Circuit - shorted to battery +.
P0261	651	5	Injector 1 (Front Cylinder) driver circuit open or shorted to ground.
P0262	651	3	Injector 1 (Front Cylinder) driver circuit shorted to battery voltage.
P0264	652	5	Injector 2 (Rear Cylinder) driver circuit open or shorted to ground.
P0265	652	3	Injector 2 (Rear Cylinder) driver circuit shorted to battery voltage.
P0336	636	8	Crankshaft Position Sensor fault - missing tooth signal not detected in CPS signal within the correct period of time.
P0443	52020-2	3	Canister Purge Vxalve - driver circuit short to battery +.
P0444	52020-2	5	Canister Purge Valve - driver circuit open or grounded.
P0503	84	2	Vehicle Speed Sensor - data erratic, intermittent, or missing.

P-CODE NUMBER	SPN	FMI	DESCRIPTION
P0508	52019-3	5	Idle Air Control (IAC) circuit or IAC motor shorted to ground.
P0509	52019-3	11	Idle Air Control (IAC) circuit or IAC motor open or shorted to battery voltage.
P0519	52019-3	7	Idle Air Control (IAC) position out of range.
P0562	168	4	System Voltage Low - System voltage too low after the engine has been running for a specific period of time.
P0563	168	3	System Voltage High - System voltage above allowable limit.
P0914	523	2	Gear Position Sensor Signal - signal fault
P0916	523	4	Gear Position Sensor Signal - voltage too low
P0917	523	3	Gear Position Sensor Signal - voltage too high
P1217	110	0	Engine Temperature Sensor - engine overheat shutdown. (2009 only)
P1351	1268	5	Ignition Coil Primary Driver Cyl 1 (Front) - driver circuit open or grounded
P1352	1269	5	Ignition Coil Primary Driver Cyl 1 (Front) - driver circuit short to battery +
P1353	1268	3	Ignition Coil Primary Driver Cyl 2 (Rear) - driver circuit open or grounded
P1354	1269	3	Ignition Coil Primary Driver Cyl 2 (Rear) - driver circuit short to battery +
P1501	52020-0	2	Tipover Sensor (Rollover) - signal fault.
P1502	52020-0	4	Tipover Sensor (Rollover) - voltage low.
P1503	52020-0	3	Tipover Sensor (Rollover) - voltage high.
P1504	52020-0	14	Tipover Sensor (Rollover) - tipover condition detected.
P1651	1213	5	Check Engine Lamp (MIL) - MIL lamp driver circuit open or shorted to ground. (2009/2010 only)
P1653	1213	3	Check Engine Lamp (MIL) - MIL lamp driver circuit shorted to battery voltage. (2009/2010 only)
P1710	2369	5	Right Turn Indicator Driver Circuit - driver circuit open / grounded. (2009/2010 only)
P1711	2369	3	Right Turn Indicator Driver Circuit - driver circuit shorted to battery + (2009/2010 only)
P1714	2367	5	Left Turn Indicator Driver Circuit - driver circuit open / grounded. (2009/2010 only)
P1715	2367	3	Left Turn Indicator Driver Circuit - driver circuit shorted to battery + (2009/2010 only)

SPN / FMI ERROR CODES (CROSS COUNTRY)

If the CHECK ENGINE (MIL) light is ON or when it goes on and off during one ignition cycle (key on / key off cycle) an ERROR message will appear after the normal LCD Information Display functions (Miles, Trip 1, Trip 2, Miles per Gallon, Average Speed, etc.). Use the MODE button to toggle through the various normal display options and view the ERROR message at the end.

The ERROR message consists of an FMI and an SPN number.

Example: ERROR 14 - 520200 corresponds to FMI 3 / SPN 520200 (and Trouble Code P1504) in the table above for this combination. The best course of action is to connect Digital Wrench to view logged codes directly and use the guided diagnostics for that code; however, if Digital Wrench is not available you can use the description of the FMI / SPN code to determine which system or component may be causing the code by reading the description from the table.

NOTE: Error codes are not stored. The error screen will only appear when the Check Engine light is ON. When the key is turned off, the code and message is lost, but it will reappear if the fault occurs again after starting the engine.

To retrieve error codes from the display:

1. If the error codes are not displayed, use the mode button to toggle until "Err" displays in the clock area.
2. Record the three code numbers displayed in the gear position, temperature, and odometer displays.
3. Refer to table for a list of codes.

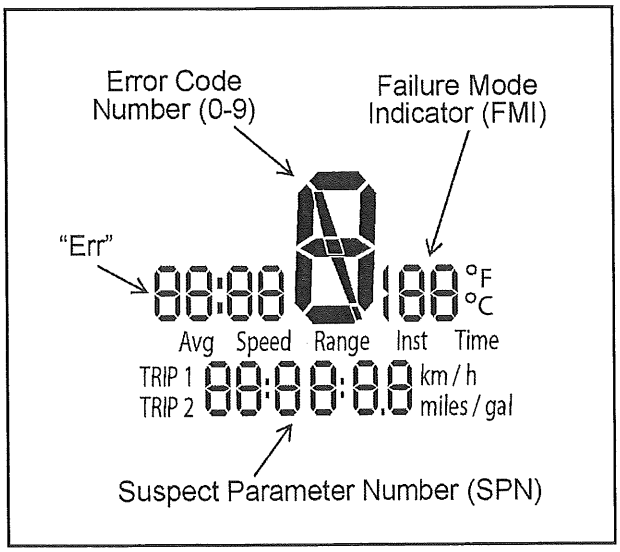

ECM HARNESS CONNECTOR TEST PRECAUTIONS

NOTICE: Tests in this section may require reading resistance and voltages at ECM connector. Once ECM connector has been removed from the ECM:

- Do not touch pins on the ECM. Static electricity from your body can damage the ECM.
- Do not attempt to perform tests on the ECM unit.
- Always use the appropriate test connector from the Electrical Connector Test Adapter Kit (PV-43526).
- DO NOT attempt to use a standard meter probe or other devices to probe the sockets in the ECM connector. Doing so could expand the terminal socket or damage the connector case, create a problem where none existed before, and complicate the diagnostic process.
- Sensor tests on the following pages can often be performed at the sensor connector itself or at the ECM connector based on accessibility of the connector or wiring.
- If a sensor tests within the specified range (OK), then test the circuit wiring. This usually originates at the ECM 60-pin connector, but may include other connections (Engine-to-Chassis harness 14-pin connector located under the seat). Be sure to check all easily accessed connectors and wiring first, to reduce diagnostic time

ECM CONNECTOR REMOVAL

1. Remove left side cover (Side Cover Removal, page 3.27).

NOTE

The lock lever also serves as an eject / install mechanism for the 60 pin connector. When removing or installing the connector, you should pull or push lightly on the connector while sliding the lock lever to assist the mechanism, keeping the connector perfectly straight with the ECM to prevent ECM pin or connector block damage.

2. Clean the connector boot and surrounding area.
3. Cut tie strap (A) and move the Engine-to-Chassis harness connector aside.
4. Pull back protective boot from ECM connector.
5. Pull connector lightly with one hand (arrow B) while sliding lock lever upward (arrow C).
6. Pull connector straight out of ECM.

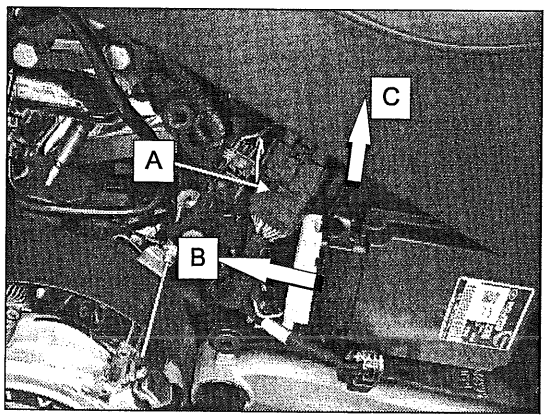

ECM Connector Installation

7. Carefully align ECM connector *straight* with flange on ECM. (Do not tip or pivot the connector when installing it into the ECM).
8. Gently apply straight inward pressure on connector while sliding lock lever downward until it stops and connector is fully seated.
9. Install protective boot (if equipped).
10. Install a new tie strap through slot of the harness dart and re-secure Engine-to-Chassis harness connector.

ECM REMOVAL

1. Remove left side cover.
2. Remove the ECM connector.
3. Pull outward at each corner of ECM to release darts.

EFI SENSOR CIRCUIT WIRING DIAGRAMS

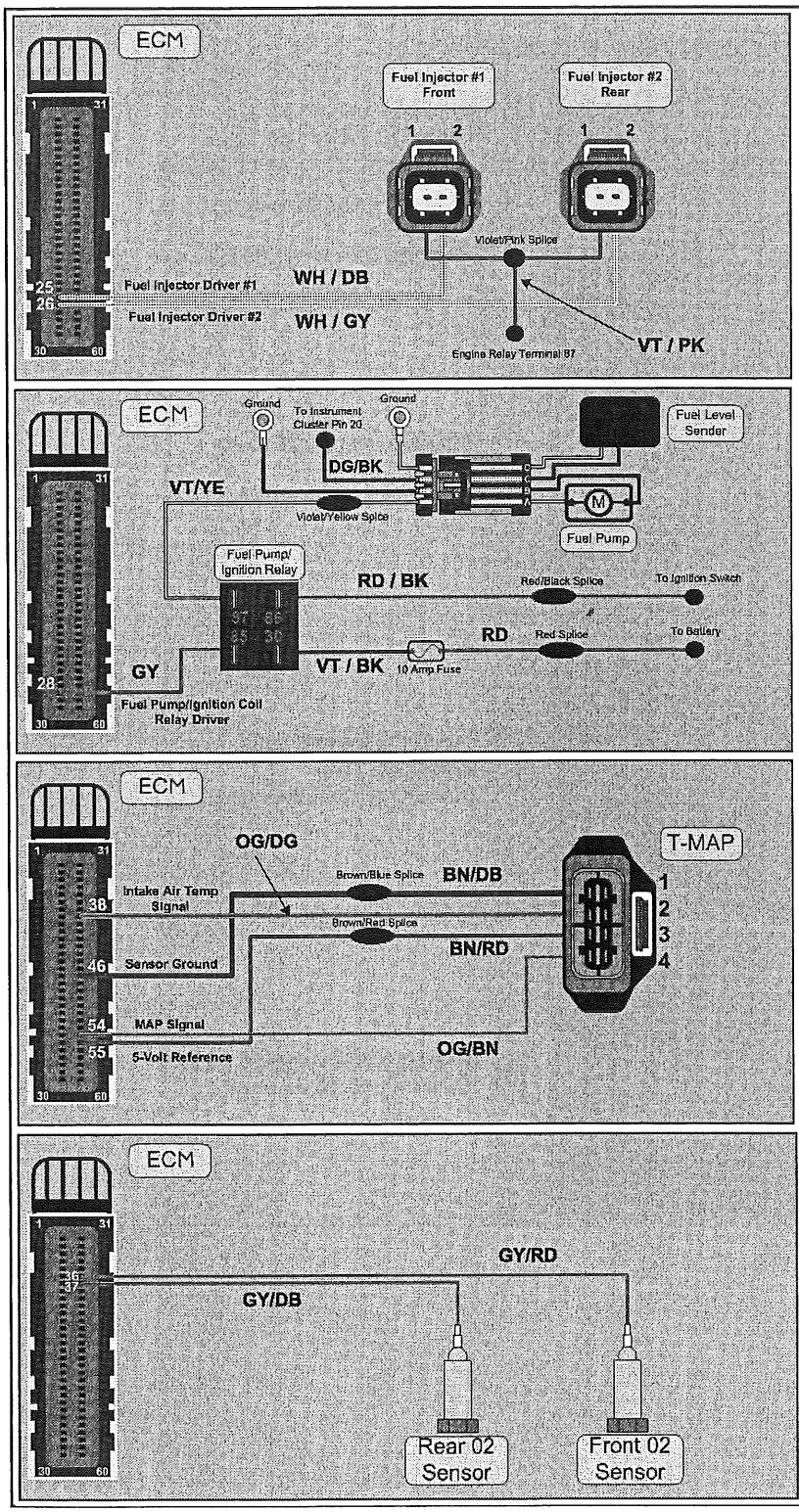

NOTE: IAC diagram is on page 5.44
Color Codes: OG = Orange; RD = Red;
BK = Black; DB = Dark Blue;
BN = Brown; DG = Dark Green
YE = Yellow; VT = Violet; GY = Gray

FUEL INJECTORS
LOCATION: Cylinder head.

FUEL PUMP
LOCATION: Inside fuel tank.

(TMAP SENSOR)

INTAKE AIR TEMP
LOCATION: Integrated with MAP sensor.

MANIFOLD ABSOLUTE PRESSURE (MAP)
LOCATION: Rear cylinder inlet port; RH side.

OXYGEN SENSOR
LOCATION: Exhaust head pipe.

5

EFI SENSOR CIRCUIT WIRING DIAGRAMS

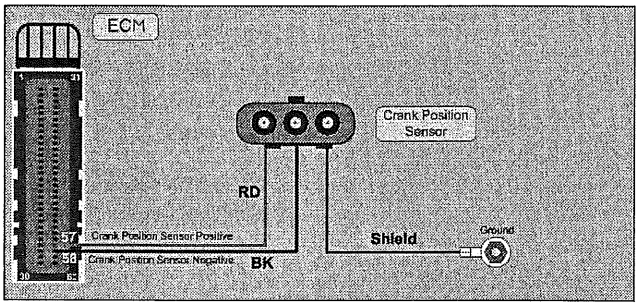

NOTE: IAC diagram is on page 5.44
Color Codes: OG = Orange; RD = Red;
BK = Black; DB = Dark Blue;
BN = Brown; DG = Dark Green
YE = Yellow; VT = Violet; GY = Gray

CRANKSHAFT POSITION SENSOR

LOCATION: Under timing cover (lower right engine).

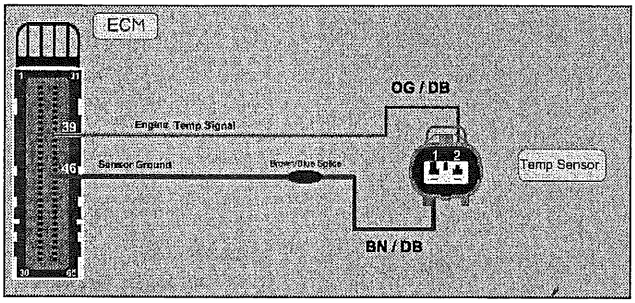

CYLINDER HEAD TEMP (CHT)

LOCATION: Front cylinder head, left side.

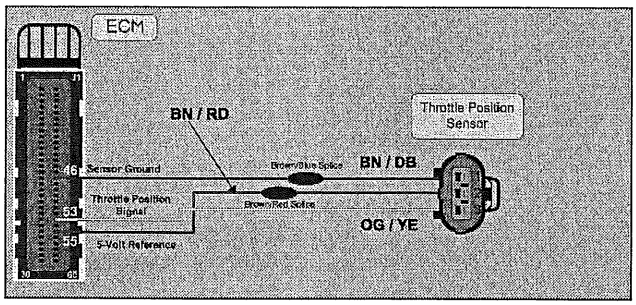

THROTTLE POSITION SENSOR (TPS)

LOCATION: Left side of throttle body.

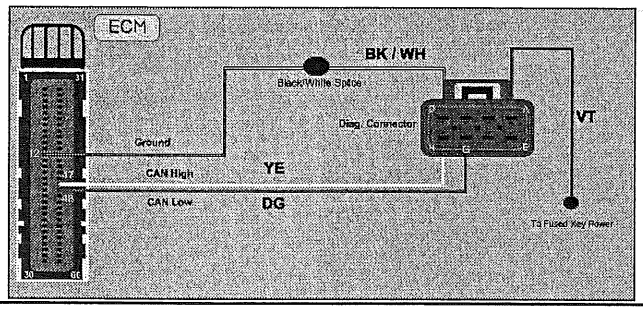

DIAGNOSTIC CONNECTOR

LOCATION: Under left side cover.

SENSOR TESTS

THROTTLE POSITION SENSOR (TPS) DIAGNOSTICS

Fail Code: P0122 / P0123

INDICATES	INSPECT	LOCATION
Voltage received at ECM from TPS is outside of parameters.	Resistance readings at ECM connector. This test inspects TPS and wiring.	Left side throttle body

To view and clear trouble codes refer to Viewing and Clearing Trouble Codes, page 5.43 . See ECM Connector Map, page 5.42 for wire colors / pin number in connector.

1. Disconnect ECM 60 pin connector (ECM Connector Removal, page 5.48).
2. Attach test lead adapters to meter leads and set DMM selector to measure resistance.
3. Place test leads in open side of connector (**not the ECM**) as indicated in chart below.
4. If results are outside of specifications, disconnect TPS.
5. Inspect wires for continuity from ECM connector to TPS connector. If any wire has no continuity or high resistance, inspect wire harness.
6. If good continuity exists, test TPS separately. Compare to chart below.

5

TOP VIEW - ECM CONNECTOR (Wire side is shown - perform tests on other side)

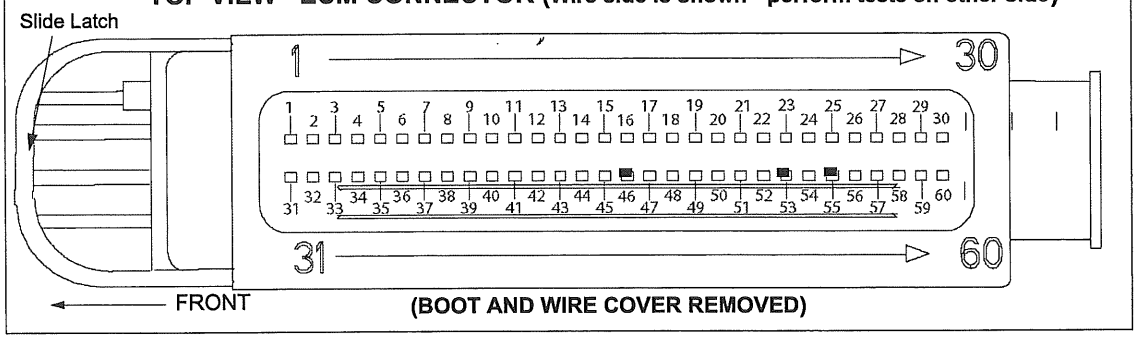

(BOOT AND WIRE COVER REMOVED)

COMPONENT	METER SETTING	TEST CONNECTIONS	SPECIFICATIONS (+ 10%)
TPS signal (OG / YE) to +5 VDC reference voltage (BN/RD)	OHMS	Pin #53 to #55	1000 - 5000 Ohm +/- 1K Ohm. Resistance changes smoothly as throttle is opened and closed. No gaps.
TPS signal (OG / YE) to signal return (BN/DB)	OHMS	Pin #53 to #46	1000 - 5000 Ohm +/- 1K Ohm. Resistance changes smoothly as throttle is opened and closed. No gaps.
TPS +5 VDC reference wire (BN/RD) to signal return (BN/DB)	OHMS	Pin #55 to #46	1000 - 5000 Ohm +/- 1K Ohm. NOTE: Reading does not change with throttle position
+5 VDC reference voltage(BN/RD)	DC Volts	Red DMM lead to pin 3 of TMAP sensor. Black to ground.	Re-connect ECM 60 pin connector. Disconnect TMAP sensor connector at the sensor. Turn key and stop switch ON. Verify 5 Volts DC present at pin 3 of connector.
NOTE: Resistance readings may vary slightly from vehicle to vehicle. The important thing to remember when testing the TPS is to look for a smooth, uninterrupted sweep between closed and open throttle. Sweep can also be checked using Digital Wrench diagnostic software.			

TEMPERATURE & MANIFOLD ABSOLUTE PRESSURE SENSOR (TMAP) DIAGNOSTICS

To view and clear trouble codes refer to Viewing and Clearing Trouble Codes, page 5.43. See ECM Connector Map, page 5.42 for wire colors / pin number in connector.

1. Disconnect ECM 60 pin connector (ECM Connector Removal, page 5.48).
2. Disconnect TMAP sensor connector (push black tab).
3. Attach test lead adapters to meter leads and set DMM to measure resistance.
4. Place test leads in open side of connector (**not the ECM**) and measure resistance of each wire to the TMAP sensor connector. Verify good continuity on each wire (example: pin 53 of ECM connector to pin 4 of the TMAP connector should have less than .5 Ohm resistance).
5. Re-connect the ECM connector.
6. Turn key ON and turn engine stop switch to RUN.
7. Set DMM to measure DC Volts.
8. Test for 5VDC reference voltage at connector (see test in table below).
9. Check the MAP Sensor Volts and pressure in Digital Wrench. Voltage should be approximately 0.6 V @ 30 kPa, (approximately 1.0 V @ 50 kPa), etc.

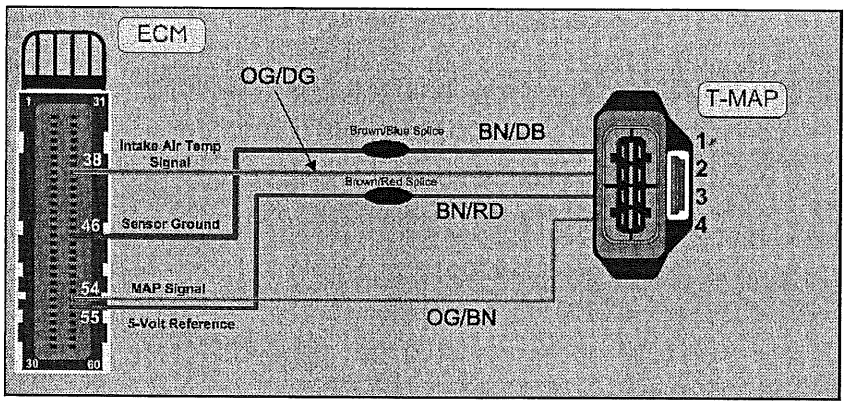

TMAP Sensor, 115 kPa

COMPONENT	METER SETTING	TEST CONNECTIONS	SPECIFICATIONS (±10%)
+5 VDC reference voltage (BN/RD) to TMAP connector.	DC Volts	Red DMM lead to pin 3 of TMAP. Black DMM lead to ground.	Re-connect ECM 60 pin connector. Disconnect TMAP connector from sensor. Turn key / stop switch ON. Verify 5 Volts DC present at pin 3 of connector. If Code 107 (Low voltage to MAP) code is present, jump pin 3 (5 V ref) to pin 4 (sigrtrn). Does code go out? If yes, replace MAP Sensor. If no, check wiring.

AIR TEMPERATURE SENSOR (ATS) DIAGNOSTICS

Fail Code: P0112 / P0113

COMPONENT AFFECTED: AIR TEMPERATURE SENSOR		
INDICATES	**INSPECT**	**LOCATED**
Voltage received at ECM from ATS is outside of parameters.	Resistance readings at ECM connector (ECM disconnected). This test will inspect wiring, connectors, and Air Temperature sensor resistance.	On rear cylinder head intake port (in TMAP sensor).

To view and clear trouble codes refer to Viewing and Clearing Trouble Codes, page 5.43. See ECM Connector Map, page 5.42 for wire colors / pin number in connector.

1. Disconnect ECM 60 pin connector (ECM Connector Removal, page 5.48).
2. Attach test lead adapters to meter leads.
3. Set DMM to measure resistance.
4. Place meter leads in pins 38 and 46 of connector **(not the ECM)** and compare to specification.

NOTE

Temperature of engine / sensor must be as specified.

5. If reading is outside of specifications, disconnect air temperature sensor connector and verify wires have good continuity back to the 60 pin connector.
6. If wiring is correct, measure the sensor resistance directly at the sensor. In addition, ATS data can be viewed as a temperature value in Digital Wrench diagnostic software. The sensor should display a temperature close to ambient room temperature.
7. Replace TMAP sensor if out of specified range.

5

TOP VIEW - ECM CONNECTOR (Wire side is shown - perform tests on other side)

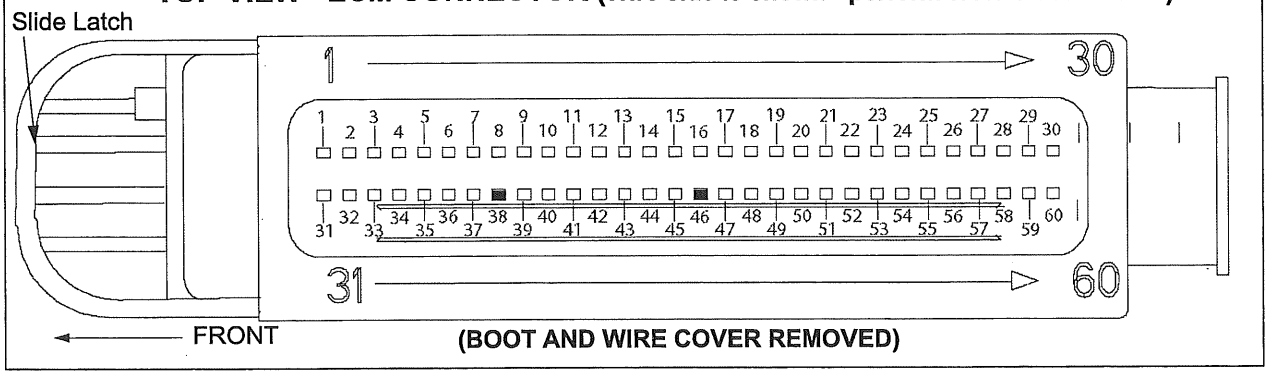

(BOOT AND WIRE COVER REMOVED)

COMPONENT	METER SETTING	TEST CONNECTIONS	SPECIFICATIONS (±10%)
AIR TEMPERATURE SENSOR signal return (BN/DB) to OG /DG	OHMS	Pin #46 to #38	2.5 K Ohms +/- 5% at 20° C (68° F)

CYLINDER HEAD TEMPERATURE SENSOR (CHT) DIAGNOSTICS

Fail Code: P0117 / P0118

COMPONENT AFFECTED: CYLINDER HEAD TEMPERATURE SENSOR (ENGINE TEMPERATURE)	
INDICATES	**INSPECT**
Voltage received at ECM from CHT sensor is outside of parameters.	Resistance readings through sensor and wiring at ECM connector (ECM disconnected). This will test will inspect the wiring, connectors, and CHT sensor resistance.

To view and clear trouble codes refer to Viewing and Clearing Trouble Codes, page 5.43. See ECM Connector Map, page 5.42 for wire colors / pin number in connector.

1. Disconnect ECM 60 pin connector ECM Connector Removal, page 5.48.
2. Attach test lead adapters to meter leads.
3. Set DMM to measure resistance.
4. Measure resistance between pin 46 and pin 39 of the ECM connector and compare to specification.
5. If resistance is out of specified range, disconnect sensor and measure the resistance through each wire from ECM connector to the sensor connector. Resistance should be less than 1 Ohm (good continuity).
6. If continuity is good, measure the resistance through the sensor and compare to specification.

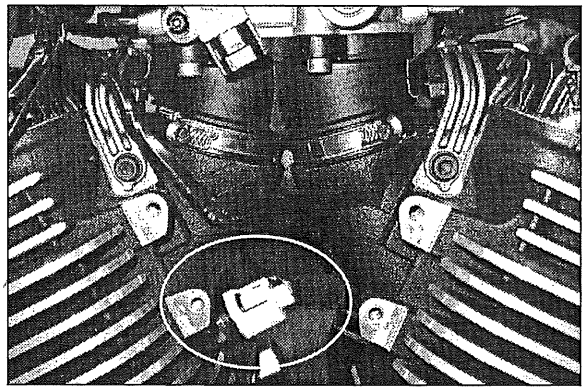

Left Side View

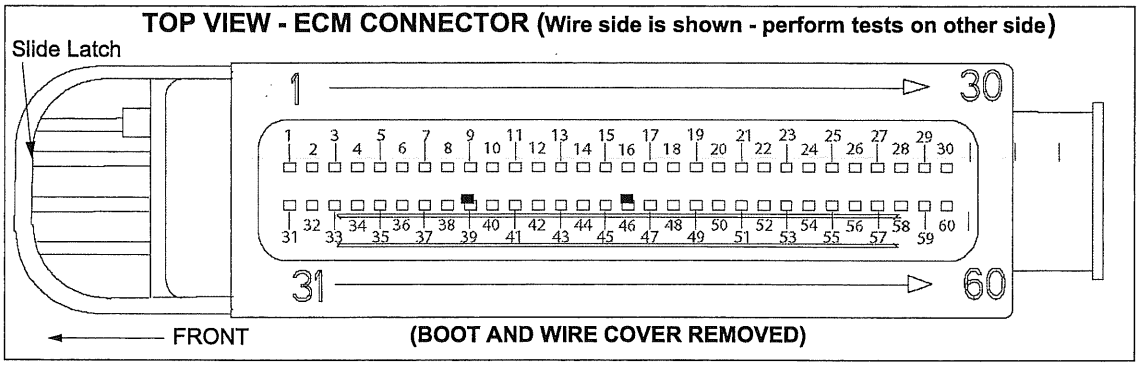

COMPONENT	METER SETTING	TEST CONNECTIONS	SPECIFICATIONS (± 10%)
CYLINDER HEAD TEMPERATURE SENSOR	OHMS	Pin #46 to #39	30.5 K Ohms +/- 13% @ 25° C (77° F)

IDLE AIR CONTROL (IAC)

Air leaks or air restrictions in the IAC air supply or delivery hoses will not cause a trouble code in the system, but are the most common cause of idle control problems. Always be sure hoses are connected properly and securely when idle control problems exist. If an IAC code is present, perform the following circuit tests.

Fail Code: P0508 / P0509 / P0519

INDICATES	INSPECT	LOCATION
P0508 - IAC circuit or IAC motor shorted to ground. P0509 - IAC circuit or IAC motor open or shorted to battery voltage. P0519 - IAC position out of range	Connector pin visual inspection. Continuity - Verify ECM to IAC motor harness connector. Verify battery voltage is supplied to IAC motor on VT/PK wire from Engine Relay.	IAC valve - under fuel rail cover. (Upper right side triangular cover)

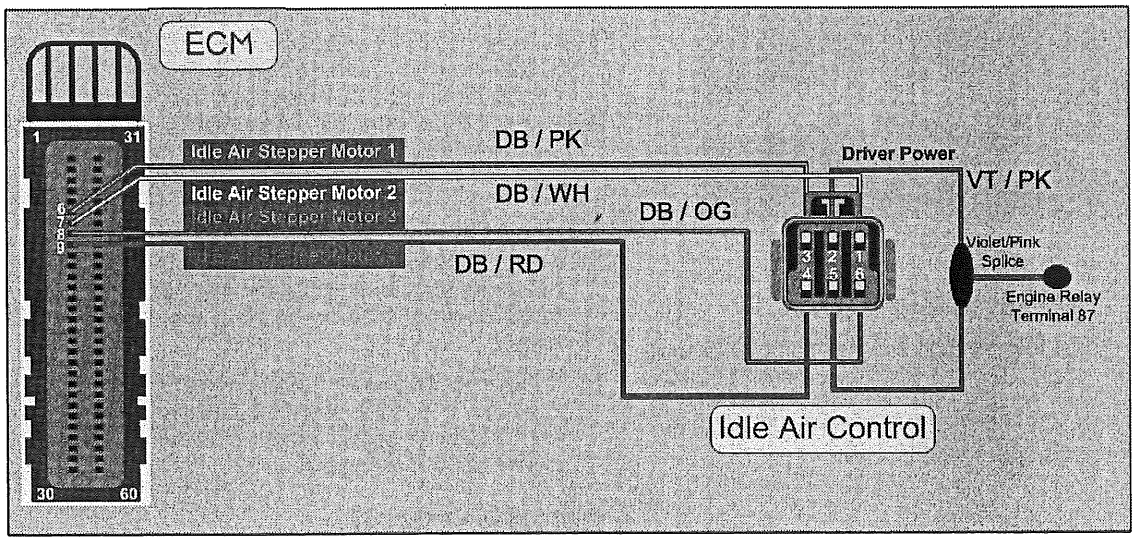

COMPONENT	METER SETTING	TEST CONNECTIONS	SPECIFICATIONS (+ 10%)
IAC Circuit Resistance	OHMS	ECM pin 6 to IAC connector pin 3.	Less than 1 Ohm
IAC Circuit Resistance	OHMS	ECM pin 7 to IAC connector pin 1.	Less than 1 Ohm
IAC Circuit Resistance	OHMS	ECM pin 8 to IAC connector pin 6.	Less than 1 Ohm
IAC Circuit Resistance	OHMS	ECM pin 9 to IAC motor harness connector pin 4.	Less than 1 Ohm
Voltage Supply To IAC Motor Harness Connector	DCV	DMM "+" lead to Pin 2 or pin 5 of IAC harness (VT/PK). DMM "-" lead to ground.	Re-connect ECM 60 pin connector. Disconnect wire harness from IAC motor. Turn ignition key and engine kill switch ON. Check for battery voltage at pin 2 and pin 5 of IAC motor harness connector.

VEHICLE SPEED SENSOR TEST

To view and clear trouble codes refer to Viewing and Clearing Trouble Codes, page 5.43. See ECM Connector Map, page 5.42 for wire colors / pin number in connector.

1. Refer to Speed Sensor Test, page 19.11 to test the speed sensor, located on the crankcase behind the rear cylinder (A).

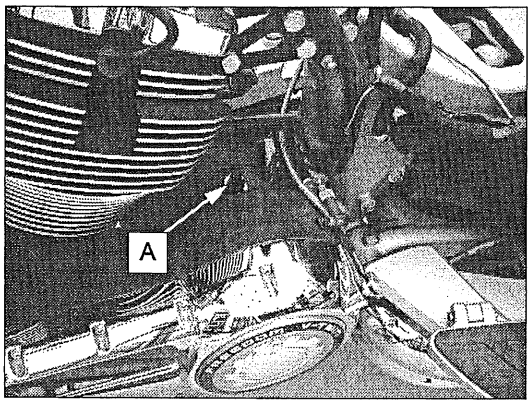

NEUTRAL INDICATOR SWITCH TEST

1. Refer to Digital Wrench and Neutral Indicator Switch Inspection, page 19.14 to test the neutral indicator switch on the vehicle. The harness connector is located at the top of the engine crankcase behind the side covers (near the speed sensor).

MEMORY CHECK SUM ERROR

To view and clear trouble codes refer to Viewing and Clearing Trouble Codes, page 5.43. See ECM Connector Map, page 5.42 for wire colors / pin number in connector.

Fail Code: P0601

COMPONENT AFFECTED: ECM	
INDICATES	**INSPECT / ACTION**
Module Memory Check Sum Error when installing new ECM.	Clear code and check to see if code re-appears

NOTE

All new ECMs have the "Memory Check Sum Error" at first power-up after the memory is loaded into the ECM. This code must be cleared when the ECM is initialized. If this code appears when using the diagnostic software, it is possible that a new ECM was not cleared successfully. If this is the case, the code may be present without an actual fault.

1. If Trouble Code message P0601 (Internal Control Module Memory Check Sum Error) is present when using the diagnostic software, first record any other faults present, then try clearing the P0601 trouble code.
2. If the code reappears, further inspection is required; however, it is more likely the code was not cleared from memory during initialization, and will not be present after it is cleared.

TIPOVER SENSOR

Refer to Tipover Sensor (Angle Sensor), page 19.15 and Digital Wrench for tipover sensor information.

CRANKSHAFT POSITION SENSOR DIAGNOSTICS

See Crankshaft Position Sensor (CPS) Resistance Inspection - Test 6, page 17.12 for CPS test procedure.

BATTERY VOLTAGE AT ECM DIAGNOSTICS

P0562 / P0563

COMPONENT AFFECTED: BATTERY VOLTAGE TO ECM	
INDICATES	**INSPECT**
Voltage received at ECM is outside of parameters.	Vehicle Battery Voltage

To view and clear trouble codes refer to Viewing and Clearing Trouble Codes, page 5.43. See ECM Connector Map, page 5.42 for wire colors / pin number in connector.

1. Turn the DMM selector dial to measure DC volts. Measure open circuit voltage at battery (Battery Inspection & Charging Procedures, page 18.8).
2. Battery voltage must be 12.5VDC or above. If below 12.5, charge or replace battery before proceeding.
3. Check the 15 A Engine fuse.
4. Connect red (+) DMM lead to Pin A of the Engine-to-Chassis wire harness connector (under LH side cover). Connect black (-) DMM lead to battery negative terminal.
5. Turn ignition key ON and cycle the engine stop switch from OFF to RUN. Battery voltage should appear on Pin A for 2-3 seconds after the engine stop switch is turned ON. To repeat the test, leave key ON and turn stop switch OFF for at least 10 seconds before repeating test.
6. Turn both ignition and engine stop switches OFF.
7. Attach test lead adapters to the DMM leads, or use Fluke accessory probes.
8. Disconnect ECM 60 pin connector (ECM Connector Removal, page 5.48).
9. Connect a jumper wire from Pin 11 in the ECM connector to ground. Verify battery voltage is present on pins 1 and 31 when Pin 11 is grounded. If voltage is not present, test related wiring If voltage is present, go to Step 10.
10. Check for power at ECM Pin 34 (for 2-3 seconds) with ignition key ON and engine stop switch set to RUN.

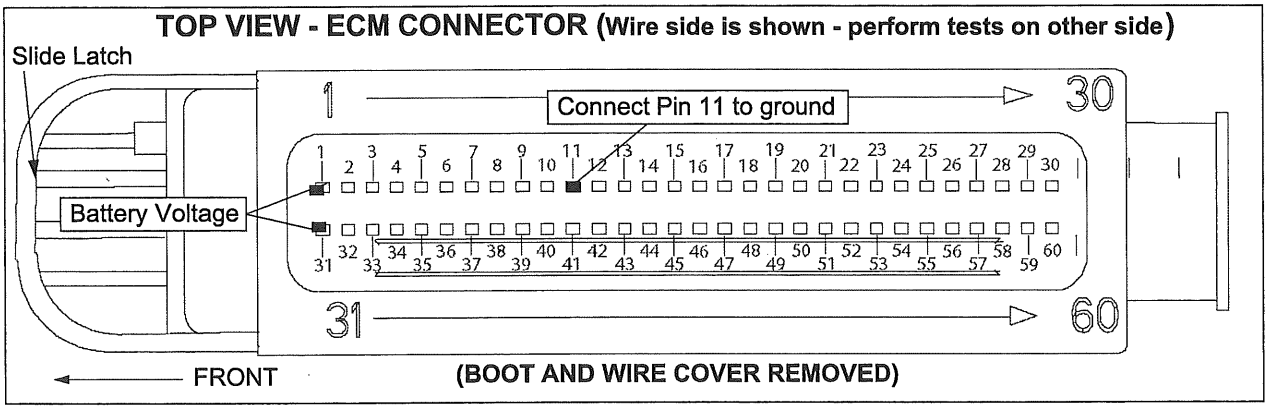

DIGITAL WRENCH

USING DIGITAL WRENCH® DIAGNOSTIC SOFTWARE

Refer to the Instruction Manual provided in the Diagnostic Tool Kit PV-46085-B to install the Polaris Digital Wrench® software on a laptop computer. Once installed, select the HELP icon (?) for more information.

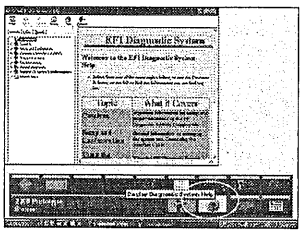

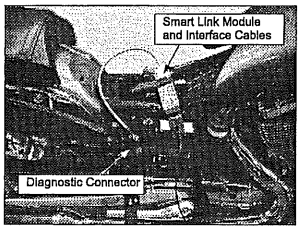

TOOLS

DIGITAL WRENCH DIAGNOSTIC SOFTWARE	PART NUMBER
Victory/Polaris Diagnostic Tool Kit	PV-46085-B
PV-46085-B (above) INCLUDES:	Digital Wrench Software: PU-47052-G
	Standard Interface Cable: PU-47151
	Victory Adapter: PV-46085-2
	SmartLink Interface Kit: PU-47471
Fuel Pressure Gauge	PU-43506-A
Fuel Pressure Gauge Adapter	PV-48656
Fluke 73 Digital Multi-Meter or Fluke 77 DMM	(Fluke 77 - PV-43568)
Electrical Connector Test Adapter Kit	PV-43526
Laptop Computer (Refer to diagnostic software user manual or HELP section for minimum specifications	Commercially Available

DIAGNOSTIC SOFTWARE VERSION

Always be sure you are using the most current version of Digital Wrench to ensure you have the latest enhancements. Reprogramming files are added to file sets as required for new models, new accessory kits, and fuel/ignition map changes. For information on how to determine if you have the latest file set download available, see Reprogramming Tips on Reprogramming Tips, page 5.63.

TPS CALIBRATION NOT REQUIRED

The TPS *does not require calibration* in the closed loop EFI system as in earlier systems, either as a baseline setting component or after reprogramming of the ECM. TPS Calibration is not a menu option in Digital Wrench for 2008 - current models.

ECM REPLACEMENT

Although the need for ECM replacement is unlikely, a specific replacement procedure is required to ensure that all essential data contained within the original ECM is transferred to the replacement ECM. Be sure to verify the VIN number of the unit you are working on and the VIN number on the Vehicle Identification page of Digital Wrench are identical after reprogramming an ECU.

Refer to procedure and carefully follow all instructions provided in Digital Wrench.

DIGITAL WRENCH® FEATURES

Once connected to Digital Wrench, a variety of features are available for reference or to use as diagnostic tools.

You do not have to be connected to a vehicle to use the help feature.

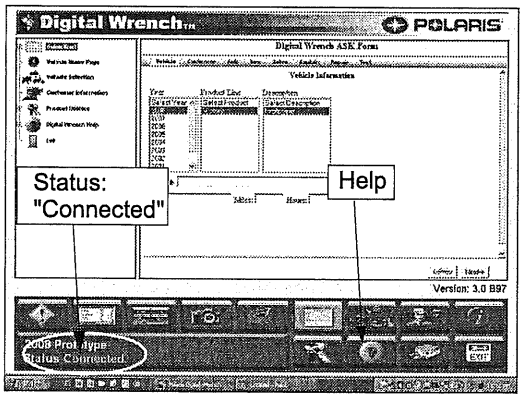

Vehicle specific service reports can be saved for future reference, or electronically sent to Polaris using the "Send Report" feature.

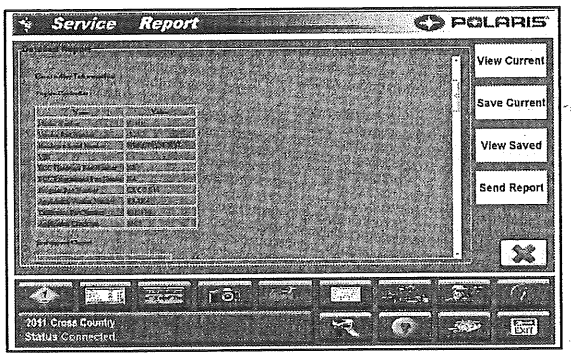

Data grids with typical or "normal" sensor values can be saved for future reference. Some examples are shown on the following pages.

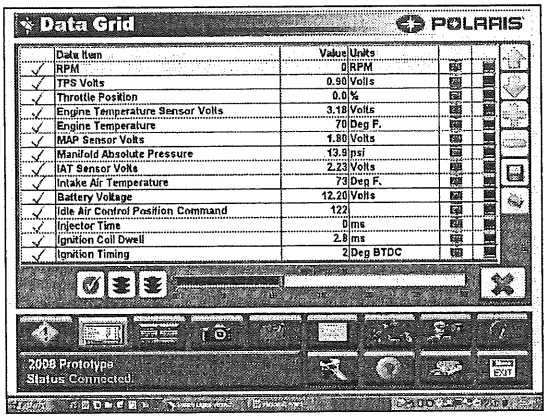

Data Item	Value	Units
RPM	0	RPM
TPS Volts	0.90	Volts
Throttle Position	0.0	%
Engine Temperature Sensor Volts	3.18	Volts
Engine Temperature	70	Deg F.
MAP Sensor Volts	1.80	Volts
Manifold Absolute Pressure	13.9	psi
IAT Sensor Volts	2.23	Volts
Intake Air Temperature	73	Deg F.
Battery Voltage	12.20	Volts
Idle Air Control Position Command	122	
Injector Time	0	ms
Ignition Coil Dwell	2.8	ms
Ignition Timing	2	Deg BTDC

DIGITAL WRENCH® GUIDED DIAGNOSTICS

Guided diagnostics are available within Digital Wrench for all supported Trouble Codes (that is, any fault that will turn on the CHK ENG light).

In addition, guided diagnostics are also available for many other electrical sub systems.

Diagnostic modules are added to subsequent versions of Digital Wrench as they become available. Check your release version often and upgrade to be sure you're using the most current tools available.

DIGITAL WRENCH® COMMUNICATION ERRORS

If you experience problems connecting to a vehicle or any Digital Wrench related problem, visit the Digital Wrench Knowledge Base for the most current troubleshooting information, FAQs, downloads and software updates at: *http://polaris.diagsys.com/.*

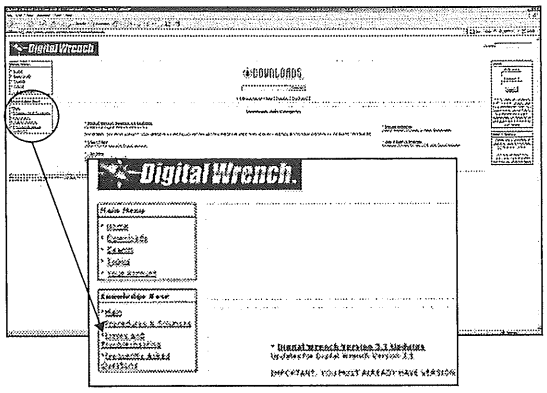

Victory dealers can access the Digital Wrench site by visiting www. polarisdealers. com and clicking on the Digital Wrench Updates link in the Service and Warranty drop down menu.

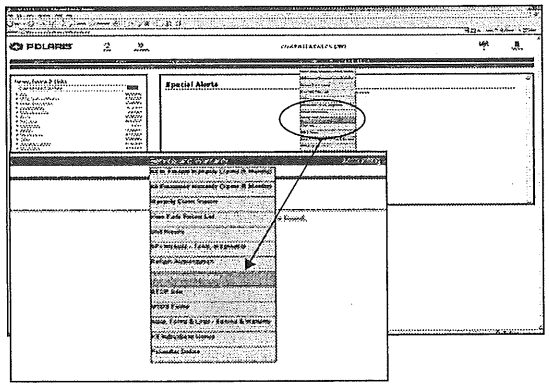

5

DIGITAL WRENCH® FEATURE MAP

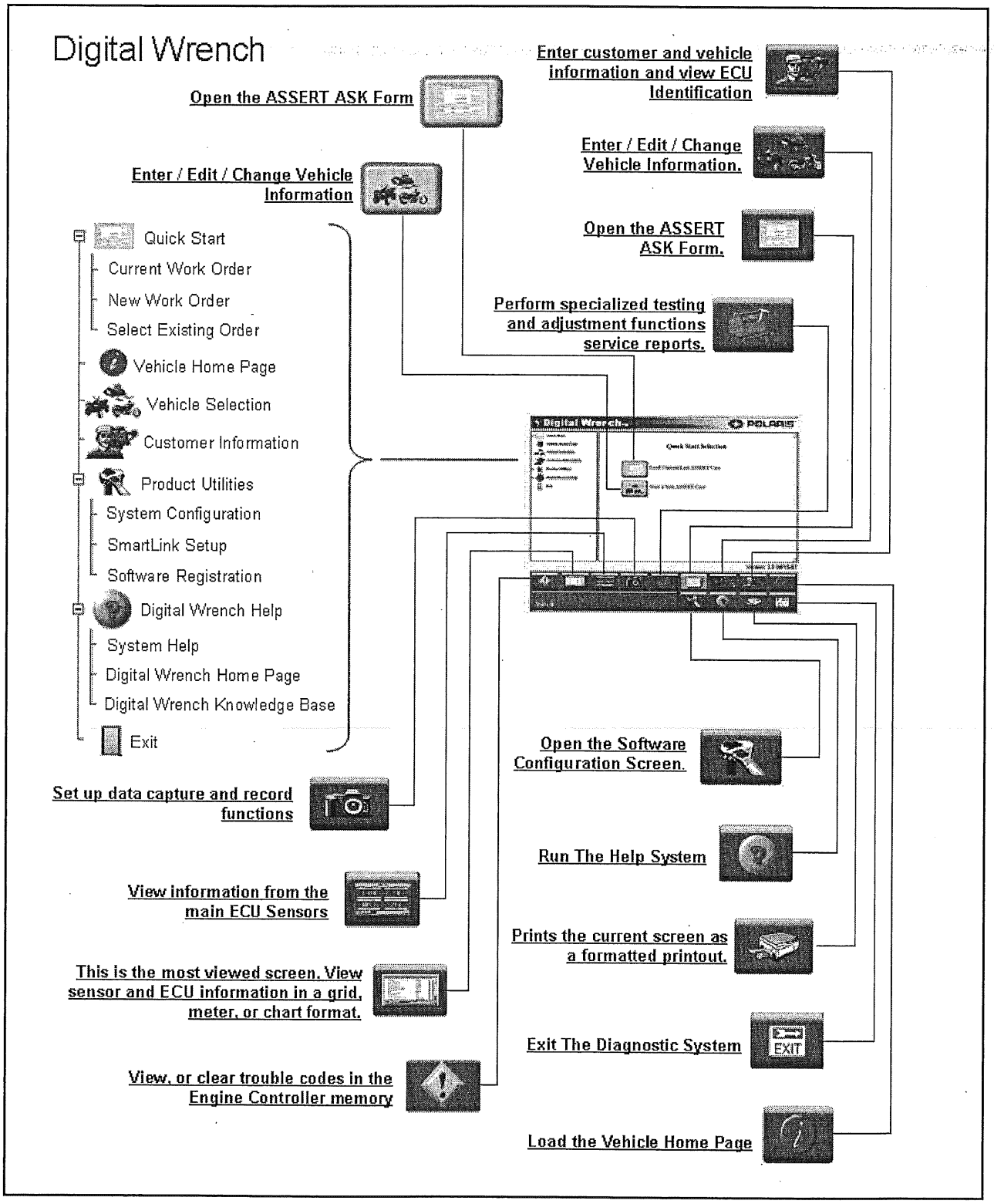

DIGITAL WRENCH® SCREEN EXAMPLES

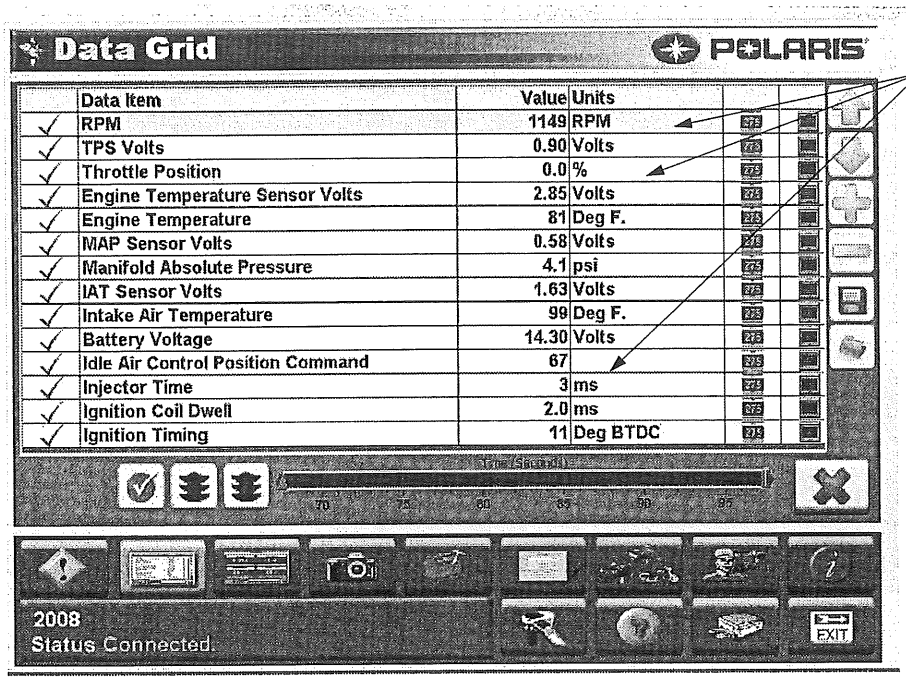

Data Item	Value	Units
RPM	1149	RPM
TPS Volts	0.90	Volts
Throttle Position	0.0	%
Engine Temperature Sensor Volts	2.85	Volts
Engine Temperature	81	Deg F.
MAP Sensor Volts	0.58	Volts
Manifold Absolute Pressure	4.1	psi
IAT Sensor Volts	1.63	Volts
Intake Air Temperature	99	Deg F.
Battery Voltage	14.30	Volts
Idle Air Control Position Command	67	
Injector Time	3	ms
Ignition Coil Dwell	2.0	ms
Ignition Timing	11	Deg BTDC

Cold engine at idle during warm up.

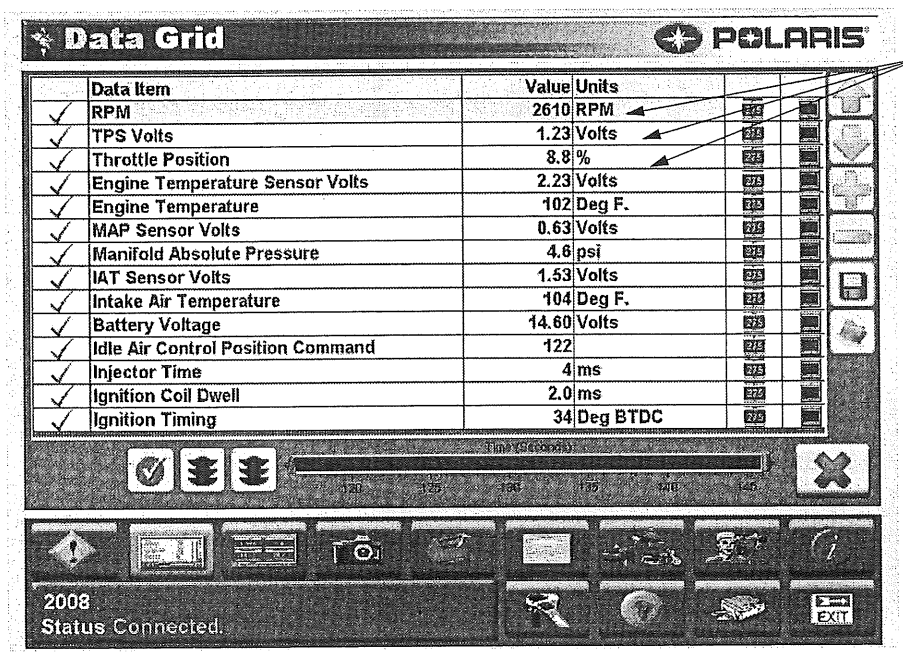

Data Item	Value	Units
RPM	2610	RPM
TPS Volts	1.23	Volts
Throttle Position	8.8	%
Engine Temperature Sensor Volts	2.23	Volts
Engine Temperature	102	Deg F.
MAP Sensor Volts	0.63	Volts
Manifold Absolute Pressure	4.6	psi
IAT Sensor Volts	1.53	Volts
Intake Air Temperature	104	Deg F.
Battery Voltage	14.60	Volts
Idle Air Control Position Command	122	
Injector Time	4	ms
Ignition Coil Dwell	2.0	ms
Ignition Timing	34	Deg BTDC

Throttle partially open. TPS voltage value has increased.

5

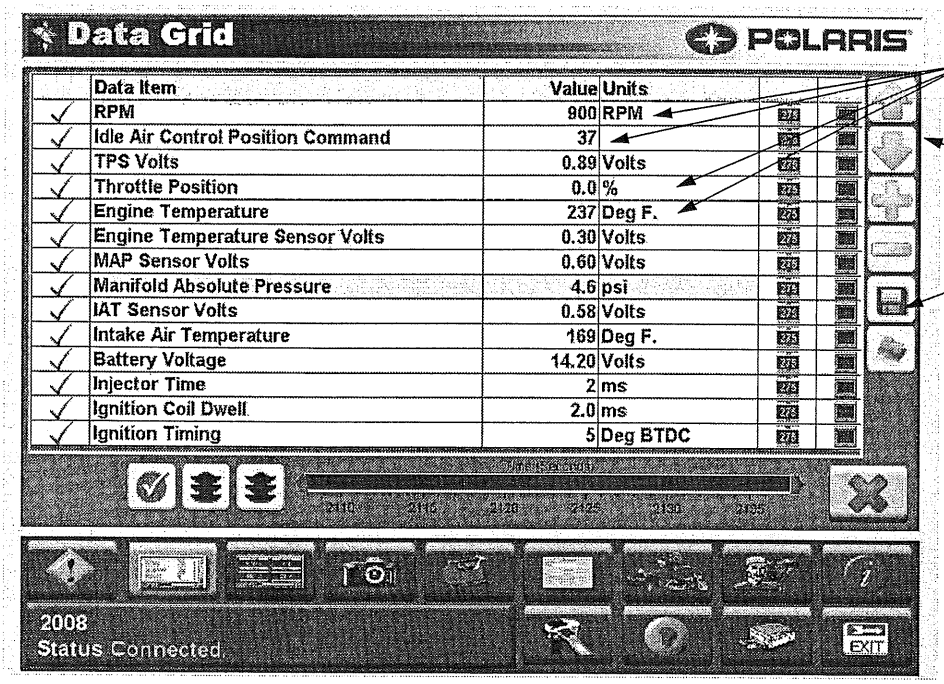

	Data Item	Value	Units
✓	RPM	900	RPM
✓	Idle Air Control Position Command	37	
✓	TPS Volts	0.89	Volts
✓	Throttle Position	0.0	%
✓	Engine Temperature	237	Deg F.
✓	Engine Temperature Sensor Volts	0.30	Volts
✓	MAP Sensor Volts	0.60	Volts
✓	Manifold Absolute Pressure	4.6	psi
✓	IAT Sensor Volts	0.58	Volts
✓	Intake Air Temperature	169	Deg F.
✓	Battery Voltage	14.20	Volts
✓	Injector Time	2	ms
✓	Ignition Coil Dwell	2.0	ms
✓	Ignition Timing	5	Deg BTDC

Warm engine at idle. RPM has stabilized

Change the position of various data items in the table with these buttons.

Save data grid.

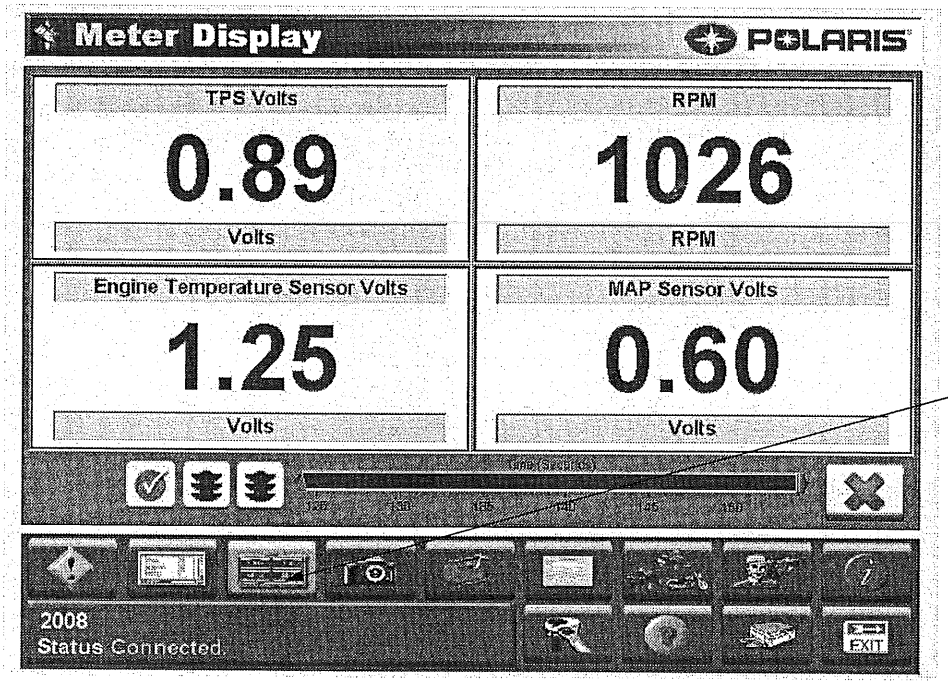

Meter Grid Display items

REPROGRAMMING THE ENGINE CONTROL MODULE (ECM)

The Digital Wrench® Engine Controller Reprogramming (or "Reflash") feature allows reprogramming of the ECM fuel and ignition map. To successfully reprogram the ECM, an Authorization Key must be obtained by entering a Request Code in the box provided on the Reflash Authorization site. The Request Code is automatically generated by Digital Wrench during the reprogramming process. The Reflash Authorization site is located under the *Service & Warranty* drop down menu on the dealer website at www.polarisdealers.com.

The Auxiliary Controller Reprogramming feature of Digital Wrench allows reprogramming of the main radio, CB radio, or Instrument Cluster in the same manner as the ECM. See Audio System Reprogramming (Auxiliary Controller Reprogram), page for *Auxiliary Controller Reprogramming*.

NOTE

: Failure to follow instructions completely can result in an engine that does not run! Review all of the Reprogramming Tips that follow to reduce the chance of reprogramming problems.

REPROGRAMMING TIPS

The reprogramming feature is in the Special Tests menu on the Digital Wrench® screen. Simply start Digital Wrench and click on the Special Tests menu icon (the red tool box). A technician should be familiar with this process and with computer operation in general before attempting to reprogram an ECM.

If you have not yet installed the software, read the *Install Instructions* in the *Getting Started* section of the Diagnostic System Installation Guide and User Manual. Laptops that fit the *System Requirements* guidelines listed in the User Manual can be used for reprogramming. Pay close attention to system requirements listed for the Windows version on your laptop.

1. *BATTERY VOLTAGE*: The majority of problems with reprogramming can be attributed to a low battery. Be sure the battery voltage (no load) is at least **13 volts and at least 12.5 volts with the key ON. It is recommended to leave a constant rate battery charger connected throughout the ECM reprogramming process.** If "Key ON" voltage is marginal, it may help to remove the headlamp relay in the fuse box.
2. *DEDICATED LAPTOP*: Best results are obtained using a laptop computer that is "dedicated to Polaris/ Victory service". A laptop that is used by a variety of people and in several applications around the dealership is more likely to cause a reprogramming problem than one dedicated to Digital Wrench® diagnostics only.
3. *OBTAINING THE LATEST FILE SET*: Reprogramming file sets are updated frequently and contain the most recent calibrations for both Stock and Performance updates. To verify the version of Digital Wrench currently installed, start Digital Wrench and check the right side of the screen just above the icon bar.

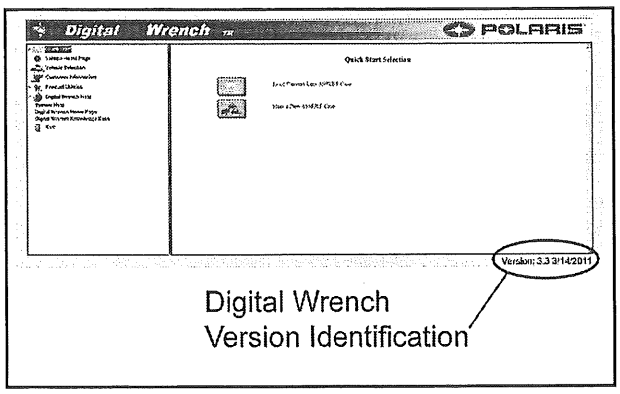

Compare your version with the version listed in the Downloads area at *www. diagsys. com*. If a later version is available, follow the instructions to download the most current version of Digital Wrench.

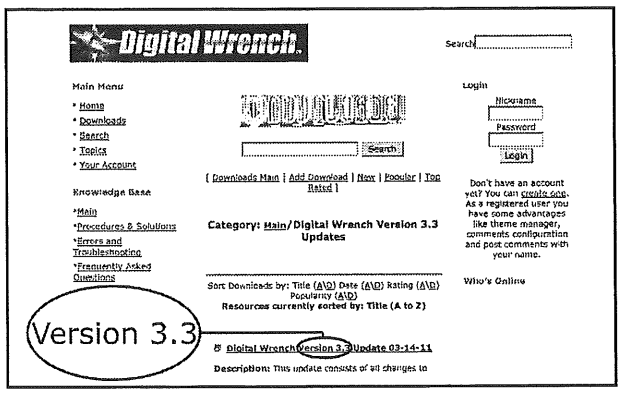

4. *CLOSE NON-ESSENTIAL PROGRAMS*: Victory recommends that you DO NOT install non-essential programs on a Service Department PC. Digital Wrench users should close all open software applications before attempting vehicle diagnostics or reprogramming an ECM.

5

5. *KNOW THE PROCESS*: If you are not familiar with the entire reprogramming process, review the **HELP** section of the diagnostic software before you attempt reprogramming. Click on the **?** on the toolbar or press F11. The information in the on-line help is the most current and complete information available. This should be your first step until you are familiar with the process.

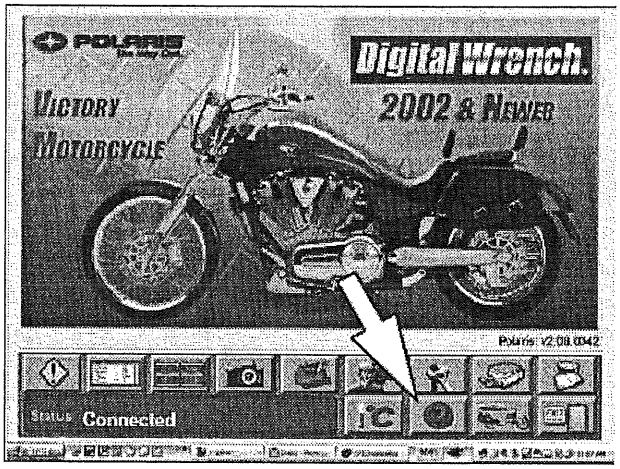

6. *COMMUNICATION PROBLEMS*: If you have had problems communicating with a vehicle while performing diagnostic functions, do not attempt reprogramming until the cause has been identified and fixed. Check all connections, and be sure battery voltage is as specified in Step 1.

7. Go to *www.diagsys.com* for specific information and FAQs on how to troubleshoot communication problems.

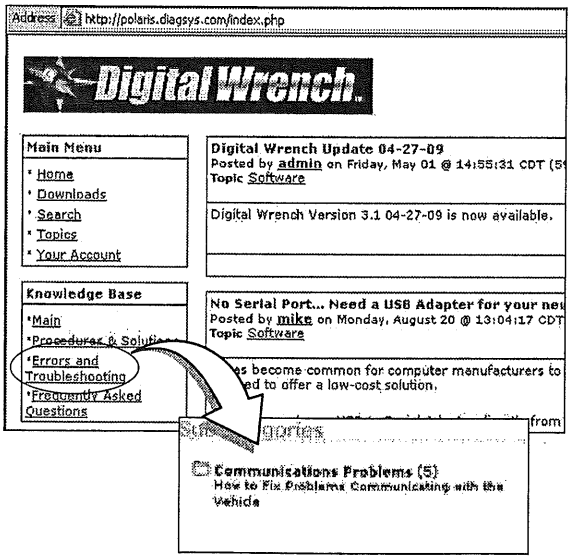

8. *DON'T DISTURB THE PC WHEN REPROGRAMMING IS IN PROGRESS. DON'T MOVE THE MOUSE AND DON'T TOUCH THE KEYBOARD.* The process only takes a few seconds, and is best left alone until complete.

9. You can select Vehicle Information from the Special Tests menu to view the part number of the software (map) installed when reprogramming is completed.

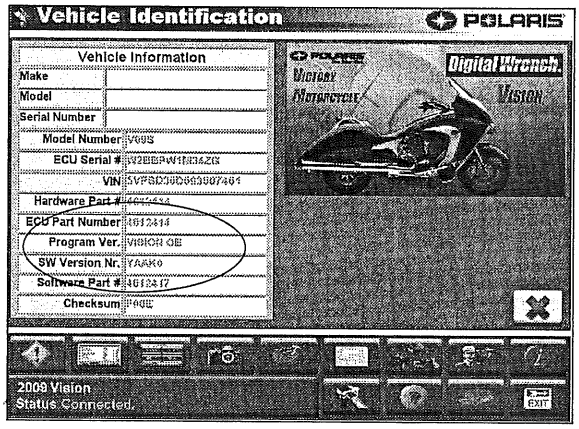

REPROGRAMMING PROCESS

If you are not familiar with the reprogramming process, review tips beginning on Reprogramming Tips, page 5.63 before you begin. Following is an overview of the reprogramming process. Follow the on-screen instructions as you progress through the steps. If you encounter a problem, always check the On-Line help for current tips and information.

1. Attach a battery charger to vehicle. See Battery Charging - General, page 16.7.
2. Connect the communication cable to the vehicle.
3. Start the Digital Wrench® program.

4. Select the year, product, and 2014model from the menus, then click the tool box icon to open the Special Tests menu.

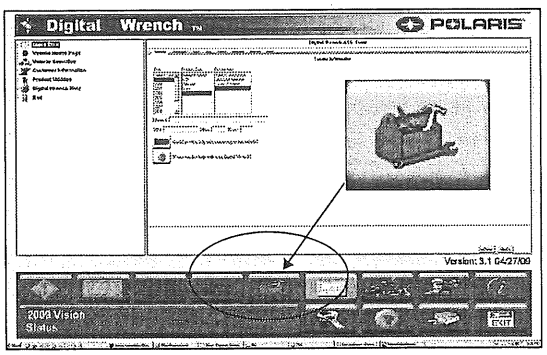

5. Select Engine Controller Reprogramming.

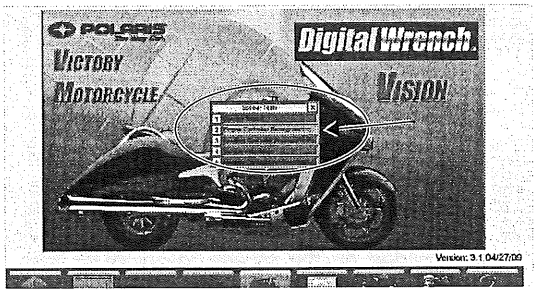

6. Select the file you want to load into the ECM then click CONTINUE to proceed to the Integrity Check and obtain a Request Code.

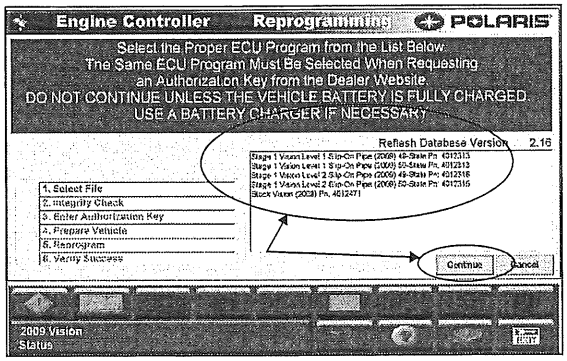

7. The Request Code will be required in the next step. Copy the Request Code, making sure not to close Digital Wrench or the Request Code will be invalid. Please note that the Request Code consists of letters, there are no numbers generated.

NOTE

Request Codes, Calibration I.D. numbers (for accessory exhaust) and Authorization Keys must be entered EXACTLY as they appear on the screen.

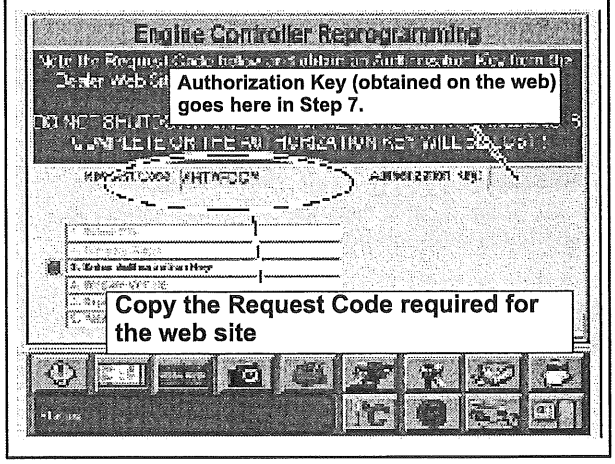

8. Go to www. polarisdealers. com and click on "Re-Flash Authorization" from the *Service and Warranty* drop-down menu.

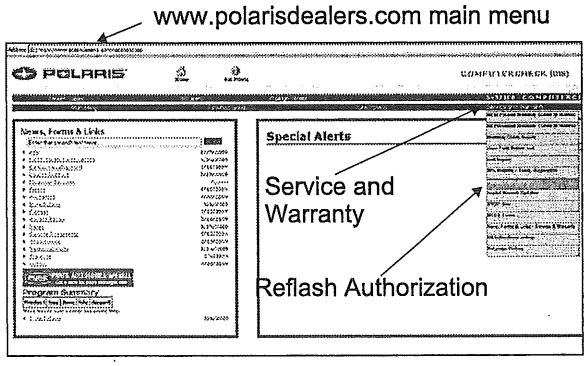

5

9. (See **III. 3**) Enter (or paste) the Request Code into the box.

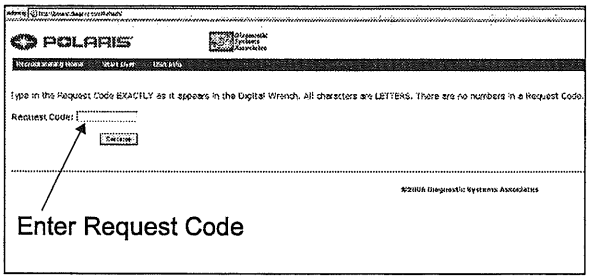

10. Select the same file type from the list that you selected previously (e.g. *Stage 1 H/JP Shotgun Pipe 2009 49 State...*), and click the Authorize button to proceed to the next screen.

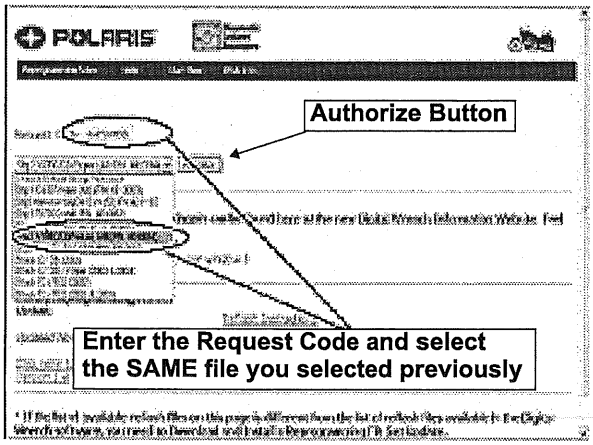

11. In the empty box provided on the screen, enter the 9 digit Calibration I.D number from the card enclosed with the accessory kit, then click "Continue".

NOTE

Stock reprogramming files do not require a Calibration I.D. number. An Authorization Key will appear after clicking the Authorize button in Step 9.

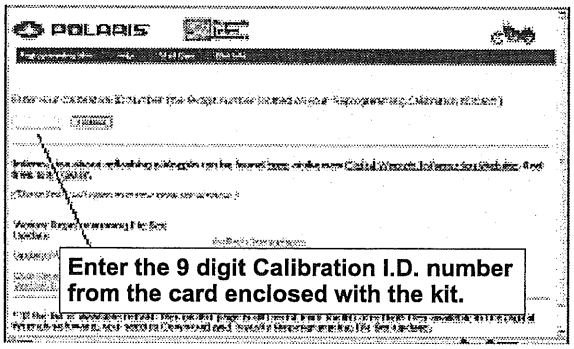

12. An 8-digit "AUTHORIZATION KEY" will appear in the upper left corner of the screen. Copy this number exactly as it appears, and enter it in the Authorization Key box on the Digital Wrench® screen. Follow instructions provided on the screen to complete the reprogramming procedure.

TROUBLESHOOTING

FUEL SYSTEM TROUBLESHOOTING

PROBLEM	POSSIBLE CAUSE	AFFECTED PART(S)	REPAIR RECOMMENDED
Engine turns over with electric starter, but won't start	Compression too low	See engine section	
	No spark at spark plugs	See ignition system	
	No fuel reaching intake tract	Out of fuel	Add Fuel
		Blown Fuse	Replace
		Plugged fuel filters / lines	Clean/Replace
		Fuel pump not working	Test / Replace
		Fuel pressure regulator Faulty fuel pump relay	Test / Replace
		Open wiring / connector	Inspect / Repair
		Faulty connection at ECM	Inspect / Repair
	Excessively rich or lean fuel mixture	Fuel pump	Test / Replace
		Fuel pressure regulator	
		Crank Position Sensor	
		Low Battery	
		TMAP sensor	
		CHT sensor	
		Fuel Injector	
	Spark at wrong time or no spark. Fuel delivery timing incorrect.	Timing Wheel or CPS installed incorrectly, damaged, or dirty; faulty CPS	Install correctly, inspect for proper air gap (gap is preset but cover, sensor, and timing wheel must be clean and in good condition).
Poor Idle / High Idle	Excessively rich or lean fuel mixture	Low Battery Voltage	Inspect Battery & Charging
		Air Leaks	Inspect IAC system
		Air restriction in IAC	Inspect IAC hoses and fittings
		Fuel Pump	Inspect fuel pressure
		Fuel injector or fuel rail obstructed or leaking	Replace
		Air Filter	Replace
		Wrong Fuel / Old Fuel	Inspect / Replace
		Crank Position Sensor	Inspect / Replace
		Throttle Plates	Remove carbon residue
Poor Running at Higher RPM	Air intake restriction	Air filter	Inspect
	Oil Overfilled	-	Inspect oil level and condition
	Ignition problems	Ignition Coil(s) / plug wires	Refer to ignition section.
	Low Battery Voltage	Battery	Charge or replace
	Loose, corroded, or wet connector(s)	ECM and wiring harness	Unplug connections - inspect
	Valve train problems	Valve springs, valve, head	Inspect cylinder head & valves

5

PROBLEM	POSSIBLE CAUSE	AFFECTED PART(S)	REPAIR RECOMMENDED
Engine Stalls	Fuel Pump Problem	Low battery voltage	Battery/Charging system
		Faulty fuel pump	Check fuel pressure
		No signal from ECM	Repair Wiring
		Wiring problem	Repair/Chk Pump Relay
	Excessive rich or lean fuel/ air mixture	TMAP Sensor	Repair / Replace
		Plugged fuel filter	Replace
		Fuel pump (pressure)	Test / Replace
		Fuel pressure regulator	Test / Replace Pump Assembly
		Vacuum leak	Repair / Replace hoses
		Wiring problem	Repair
		Air Filter	Replace
		Low battery voltage	Ck battery & charging system
	Control Circuit/Sensors not functioning correctly	Fuel pressure regulator	Test Pressure / Replace
		TPS	Test / Replace
		Engine speed sensor	Test / Replace
		Fuel pump relay	Test / Replace
		Rotor	Test / Replace
		Fuse	Inspect / Install correctly
		ECM Relay	Replace
		Low battery voltage ECM	Replace
	Valve train problems or Compression low	Refer to Cylinder Head / Valves Chapter	Inspect Charging system
Backfiring	Low Battery Voltage	Battery, spark plug fouled, poor wire connection for ignition or fuel injection, loose pin in multi-pin connector for ECM or wiring harness	Refer to battery section Replace plugs / diagnose Inspect wiring connections
	Ignition Problem	Inlet Manifold and Exhaust	Disconnect and check pin connections
	Air leaks	IAC Hoses	Seal inlet or exhaust leaks (NOTE: Air leaks at throttle body can often be identified using Digital Wrench to view the *Closed Loop Correction Factor* data item. Normal is between .92 and 1.07. Higher numbers (1.25-1.35) could indicate a leaking manifold.
	Restricted air intake or throttle body	Intake tract / Throttle body	Clean air inlet tract and/or throttle body / throttle plates.

PROBLEM	POSSIBLE CAUSE	AFFECTED PART(S)	REPAIR RECOMMENDED
Poor Running above idle	Control Circuit/Sensors not functioning correctly	Engine speed sensor	Test / Replace
		TPS	Test / Replace
		Air temperature sensor	Test / Replace
		Manifold Absolute Pressure sensor	Repair/Replace
		Intermittent wiring /connector problem ECM	Test / Replace
	Fuel delivery incorrect	Plugged or kinked fuel and/or vent hoses	Repair/Replace
		Fuel pump	Test / Replace
		Fuel regulator	Test Pressure / Replace
		Fuel filter	Test / Replace
		Battery/Charging System	Charge/Replace
		Fuel Injector plugged	Clean/Replace
		Contaminated fuel (water, additives, etc.)	Clean/Replace
		Inadequate octane	Use correct fuel
		Defective throttle valve	Replace throttle body
		Low battery voltage	Charging system
	Air intake restriction	Dirty Air Cleaner	Clean
		Intake restriction	Repair
	Air Leak	Throttle body gasket surfaces	Repair/Replace
		Intake manifold	Repair/Replace
		Throttle body	Repair/Replace
Engine lacks power	Engine component problems	See Cylinder Head / Valves, Cylinder / Piston Chapters	-
	Ignition problems	See Electrical Chapter	-
	Overfilled with oil	See Maintenance Chapter	-
	Improper fuel delivery	Plugged fuel injector	Replace
		TPS	Inspect / Replace
		Dirty air cleaner	Replace
		Vacuum leaks	Repair / Replace
		Fuel pump	Test / Replace
		Fuel pressure regulator	Test / Replace
		Air temperature sensor	Test / Replace
		Engine speed sensor	Test / Replace
		TMAP sensor	Charge Battery / Replace
		Plugged vent hose	Test batt./Charging system
		Low battery voltage ECM	Test / Replace

PROBLEM	POSSIBLE CAUSE	AFFECTED PART(S)	REPAIR RECOMMENDED
Engine overheats	Internal Engine Parts	Cooling System	Refer to Lubrication / Cooling Chapter
	Lubrication & Cooling system	Cooling System	Refer to Lubrication / Cooling Chapter
	Low or incorrect oil	Engine Oil	Refer to Frame / Body / Exhaust Chapter
	Brakes dragging	Brake systems	Refer to Brakes Chapter
	Drive belt too tight	Drive Belt	Refer to Frame / Body / Exhaust Chapter
	Ignition timing incorrect	Ignition Coils Faulty Engine Speed Sensor	Refer to Electrical Chapter
	Spark plug(s)	Faulty ECM Heat range incorrect	Replace
	Low battery voltage	Faulty Wiring Charging System Faulty Battery	Repair Refer to charging section Replace
	Lean Air/Fuel mixture	Fuel pressure regulator vacuum hose kinked or plugged	Repair/Replace
		Air leak	Repair
		Fuel injector plugged	Clean / Replace
		Coolant temperature sensor	Replace
		Vent hose plugged/ kinked	Repair
		Air leak at throttle body to manifold seal	Repair
Won't Accept New Calibration	Non-Current Calibration File Set	-	Go to Dealer website (Victory Re-Flash) and download the most current Victory Calibration File Set
	Low Battery Voltage	-	Attach Battery Charger During Re-Flash, and Re-Charge Battery When Re-Flash Is Completed
	Attempting Re-Flash Without Proper VIN, Calibration I.D. number, or calibration authorization code	-	Enter Authorization Code Sent With Accessory Kit

CHAPTER 6
ENGINE REMOVAL / INSTALLATION

OVERVIEW - ENGINE REMOVAL 6.2
GENERAL 6.2
SPECIFICATIONS 6.2
SPECIAL TOOLS 6.2
ENGINE MOUNTING - AIRBOX / MAIN FRAME ASSEMBLY 6.3
ENGINE REMOVAL 6.4
PREPARATION FOR REMOVAL 6.4
PRECAUTIONS 6.4
REMOVAL PROCEDURE 6.4
INJECTOR REMOVAL 6.11
ENGINE INSTALLATION 6.12
PREPARATION FOR INSTALLATION 6.12
INSTALLATION PROCEDURE 6.12
ENGINE ATTACHMENTS & NOTES 6.15

OVERVIEW - ENGINE REMOVAL

GENERAL

Swingarm removal is required to access the bolts that fasten the engine to the rear subframe on Cross Roads and Cross Country models. The front wheel must be secured in the wheel vise of a motorcycle lift, the engine supported securely on a platform lift, and the rear subframe supported with an overhead hoist or shop crane when the swingarm is removed. In order to complete the work safely and correctly, be sure all special tools and equipment are available before you begin. Arrange for assistance when removing and installing the engine.

Engine Mounting Plates PV-48737 must be installed and tightened *before* the engine is removed to maintain alignment between the front and rear frame sections and simplify the engine installation process.

After engine is removed, the swingarm (and rear shock and strut) can be temporarily installed so motorcycle is self supported. An engine stand is recommended for disassembly and assembly of engine.

Engine removal and installation methods may differ slightly depending on available equipment, but always be sure the engine and chassis are securely supported at all times.

⚠ WARNING

Care should be taken to be sure the motorcycle will not tip or fall while elevated. Severe personal injury or death could occur if the motorcycle or engine tips or falls.

REQUIRES ENGINE REMOVAL FOR SERVICE	CAN BE SERVICED WITH ENGINE IN FRAME
Camshaft	Regulator, Stator, Flywheel
Camshaft Chain / Guide / Tensioner Blade	Cam Chain Tensioner
Crankcase Breather Reed Valve	Clutch
Crankshaft & Crankshaft Component Service	Fuel Injectors / Fuel Rail
Cylinder Heads	Throttle Body

REQUIRES ENGINE REMOVAL FOR SERVICE	CAN BE SERVICED WITH ENGINE IN FRAME
Valve Covers	Ignition System
Oil Pump	Output Shaft Seal
Oil Pump Drive / Balance Shaft	Starter, Starter One-Way Clutch, Starter Torque Clutch,
Piston / Cylinder	Gearshift Linkage and Gear Shift Mechanism
Transmission / All Internal Transmission Parts	Torque Compensator Assembly

SPECIFICATIONS

Engine Weight and Oil Capacity

ITEM	SPECIFICATIONS
Engine Dry Weight	Approximately 120 Kilograms (265 lbs)
Oil Capacity	Approximately 4.75 Liters (5.0 Quarts)

SPECIAL TOOLS

Engine Removal Special Tools and Equipment

ITEM	PART NUMBER
Engine Mounting Plates	PV-48737
Motorcycle table lift with wheel vise	Commercially Available
Engine platform jack or platform lift	Commercially Available
Overhead hoist or shop crane	Commercially Available
Engine stand.	Commercially Available

ENGINE MOUNTING - AIRBOX / MAIN FRAME ASSEMBLY

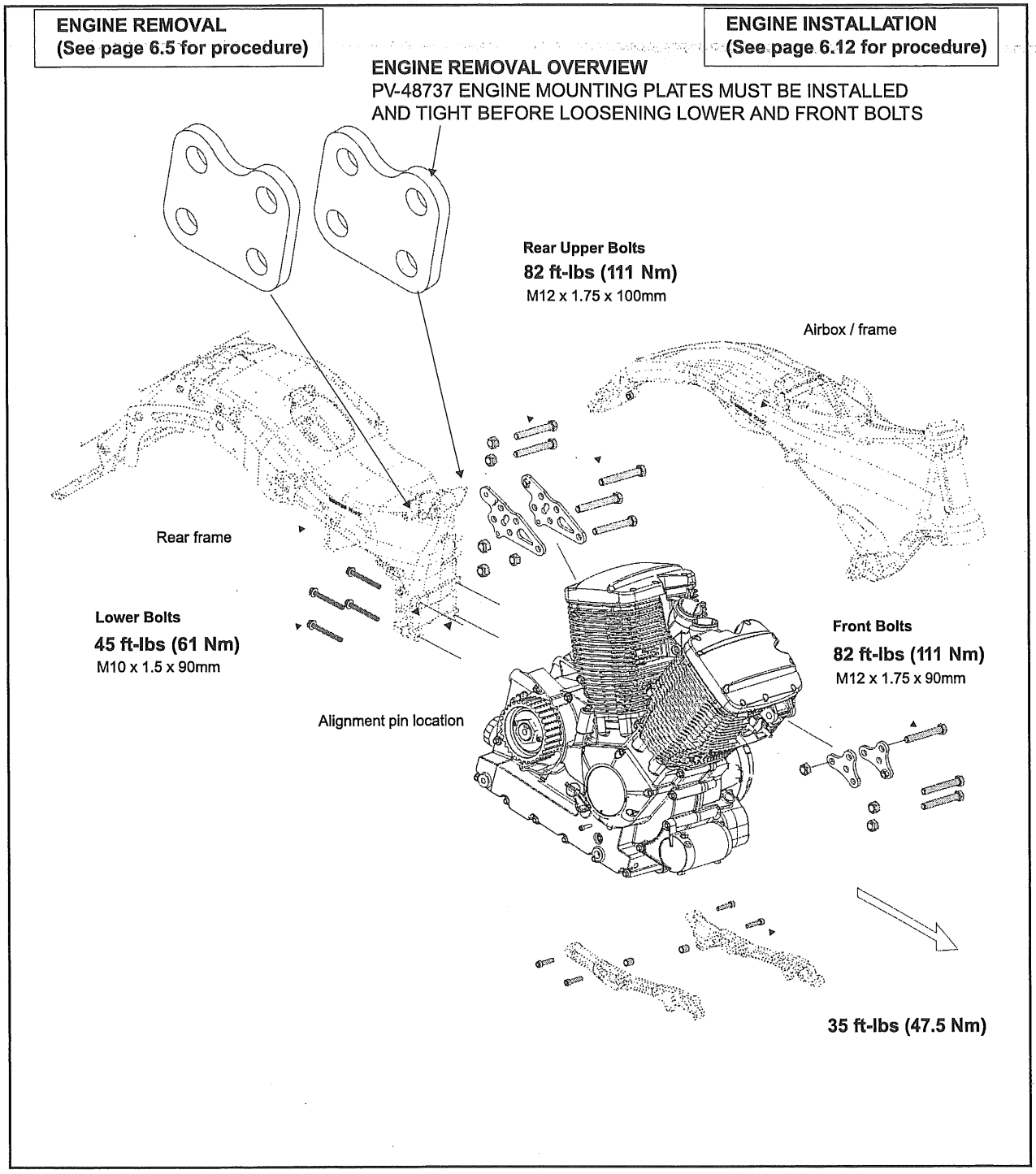

6

ENGINE REMOVAL

PREPARATION FOR REMOVAL

A number of different methods can be used to remove the engine depending on the equipment available to the technician.

- Support motorcycle securely in an upright position during engine removal. Clamp front tire securely on a stable motorcycle lift and secure the front wheel in the wheel vise.
- Clear the work area so rear and sides of motorcycle are accessible with lift equipment.

PRECAUTIONS

- Clean engine thoroughly before removal. Cover openings during and after engine removal.
- Note routing of wires, cables and hoses. Refer to routing diagrams throughout this manual for more information.
- Always note the location of tie straps, dart straps, or any one-time-use fastener and replace with new parts in the same location upon assembly.

REMOVAL PROCEDURE

Remove the list of items in this general order. Refer the pages listed for procedure.

1. Remove:

- Side covers and seat (Side Cover Removal, page 3.27).
- Saddlebags (Saddlebag, Removal / Installation (Unbolted), page 3.28).
- Engine oil (Oil Change Specifications, page 2.4) and mufflers (Assembly View - Exhaust Complete, page 3.46).
- Ignition switch and IAC covers (Ignition Switch / IAC Cover, page 3.6).
- Highway bars and horn bracket (Highway Bars, page 3.23).
- Chin fairings (outer, inner, and rear) (Chin Fairing (Inner Grill), page 3.22).
- Battery (Battery, page 2.21).
- Fuel tank and fuel line (Fuel Tank Removal, page 5.19).
- Left footrest with shift linkage (Floorboard / Foot Control Mounting, page 3.41).
- Engine crankcase breather hose.
- Left passenger footrest, rear brake line clamp (A), tie strap (B), and line guide (C) from swingarm.
- Rear brake line clamp (D) on left cradle (near sidestand mount).

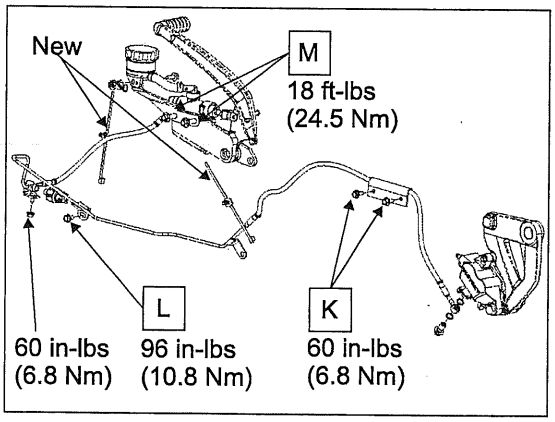

- Remove oil cooler and lines (Oil Cooler / Oil Line Removal, page 4.6).
- Disconnect clutch cable from lifter arm on primary cover (Clutch Lever Lubrication, page 2.15) and remove cable from bracket.

2. Remove starter motor (+) cable from motor or solenoid (E), ground wires (F), wires from load side of circuit breaker (G), and brake light switch wires (H). Disconnect Regulator/Rectifier 3-Pin connector from stator.

3. Remove (3) battery box screws (I) at front of left cradle and remove left cradle.

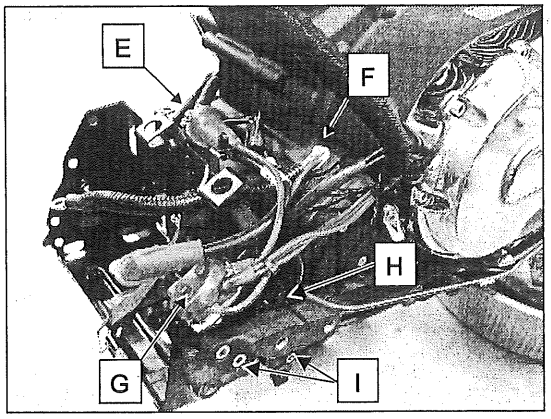

4. Remove right floorboard support bolts (J) then remove rear master cylinder assembly from floorboard mount by removing bolts (K) and clip (L) with clevis pin. Support master cylinder and reservoir. Do not allow assembly to hang from brake lines.

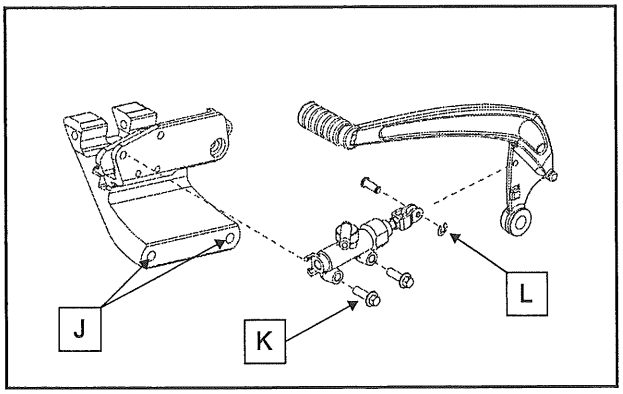

5. Remove left side cradle bolts (M) then remove cradle with sidestand attached.
6. Open clip to release front head pipe oxygen sensor wire. Disconnect sensor wire at harness connector (*do not attempt to disconnect wire from sensor*).
7. Cut tie strap (N) that secures brake line to rear right side of battery box.
8. Remove right side cradle bolts (O) then remove cradle with battery box attached. Set assembly aside with brake master cylinder, reservoir, and line supported.

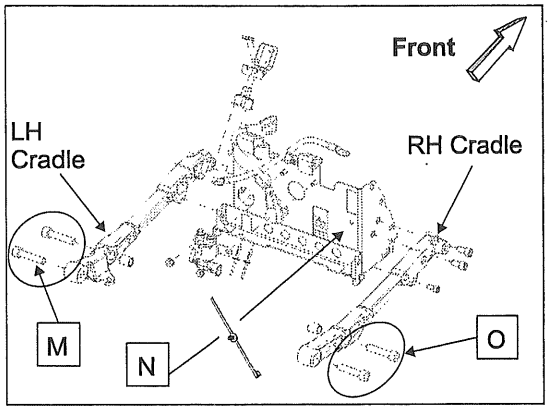

9. Disconnect rear oxygen sensor wire at harness connector (*do not attempt to disconnect wire from sensor*).
10. Loosen front head pipe flange nuts (P) about two turns. Remove rear head pipe flange nuts (Q).

6

11. Loosen clamp (R) and remove bolt (S) on left side.

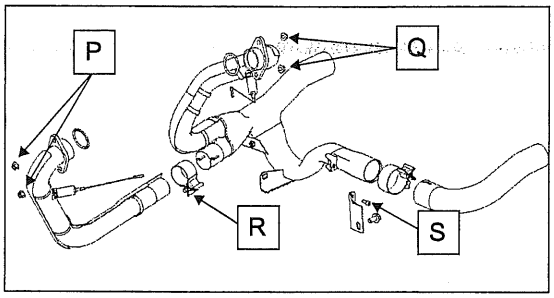

NOTE

The exhaust header cross-over pipe is attached to a plate with an M6 allen screw on the left rear corner of the engine (M5 drive head).

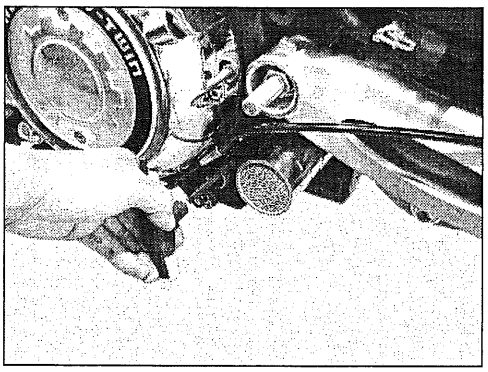

12. Remove nut from right side of swingarm pivot shaft that secures the right side passenger footrest bracket; then remove the lower bracket fasteners.
13. Pull rear head pipe outward to loosen front head pipe clamp joint (R, above) then slide passenger foot rest bracket off swingarm pivot shaft and remove bracket.
14. Remove front head pipe flange nuts and remove head pipe assembly.
15. Loosen rear axle nut about 3 turns. Loosen belt adjusters (T) equally on each side 2 - 3 turns. Tap wheel / axle forward to remove belt tension.

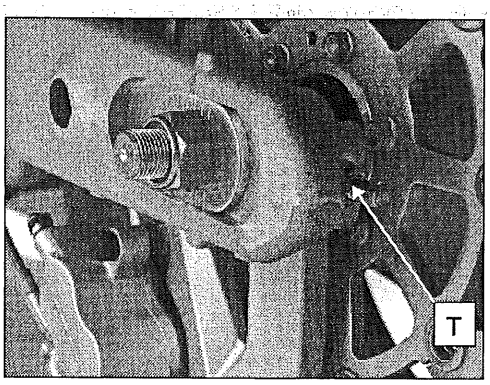

16. Remove drive sprocket cover and drive belt.

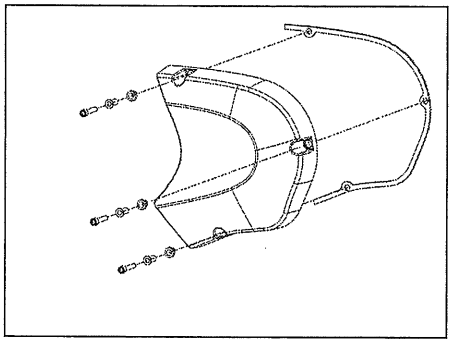

NOTE

Do not kink or twist the drive belt.
If you plan to disassemble the engine crankcase, remove drive sprocket (Drive Sprocket and Seal Removal, page 11.7).

17. Remove ignition switch bracket with coil and switch attached. Lift tab (U) to disconnect coil. Push tab (V) to disconnect ignition switch.

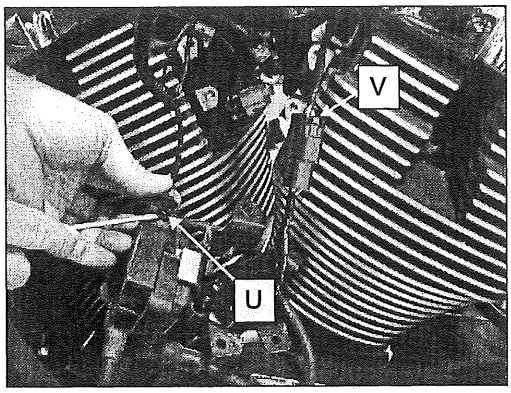

18. Disconnect IAC air supply hose (W) from frame, and air delivery hoses (X) from throttle body.

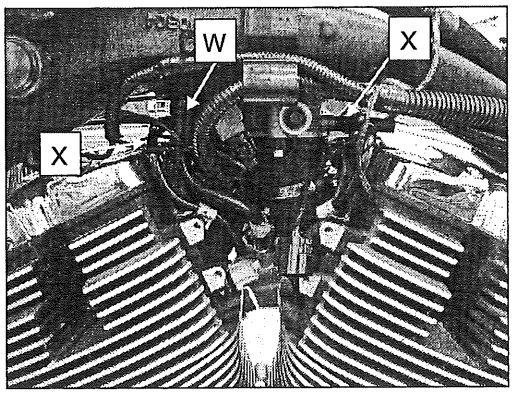

19. Push tab (Y) to disconnect IAC valve. Remove bracket (M5 ball-drive allen), valve, and hoses.

20. Remove cables from bracket and throttle reel. The bottom cable (Z) is the PULL cable and is darker in color than the upper (PUSH) cable.

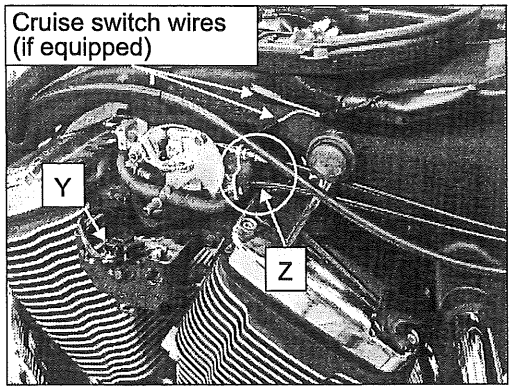

SENSORS - LEFT SIDE and REAR ENGINE

21. Push black tab (A) and disconnect the TPS harness from throttle body.

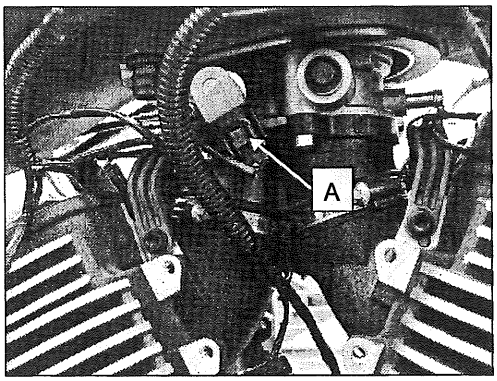

22. Slide oil pressure switch connector off switch and cut tie strap (B) that secures the wire to the crankcase.

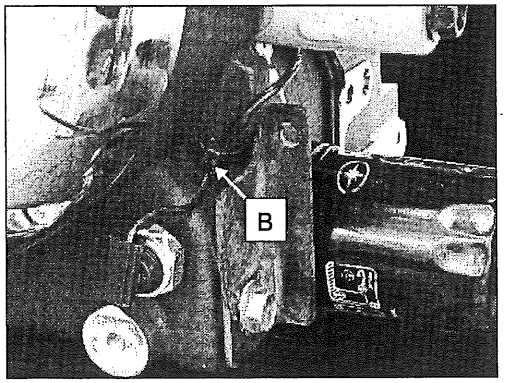

23. Push black tab on left side of connector to disconnect speed sensor (C).

6

24. Push white tab to disconnect gear position sensor.
25. Lift black tab to separate CPS harness.
26. Remove ground wire screw (D) near clutch cable bracket.

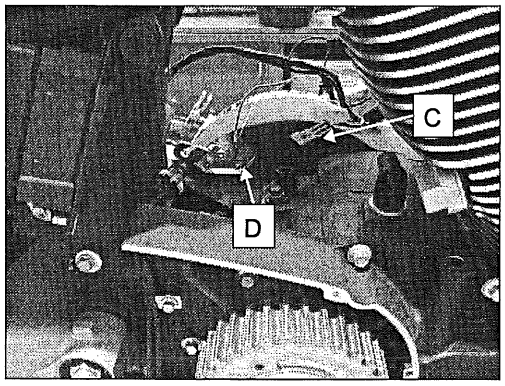

SENSORS - RIGHT SIDE

27. Push black tab (E) to remove TMAP sensor harness from sensor.
28. Push white tab (F) to disconnect engine temperature sensor.

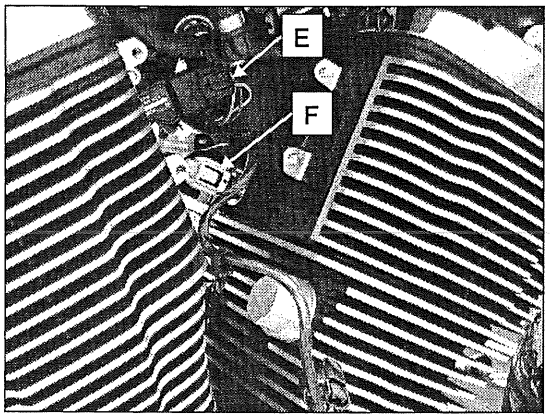

29. Secure wire harness out of the way of engine removal.

ENGINE REMOVAL FROM FRAME

30. Place a platform lift (commercially available) under engine crankcase and lift engine just enough to support the engine (do not elevate wheel or frame).

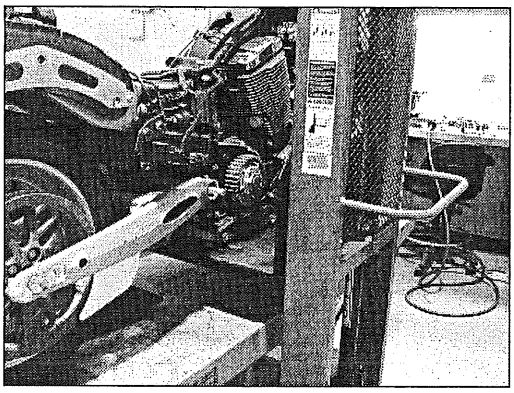

31. Remove upper rear engine mount bolts and plates.

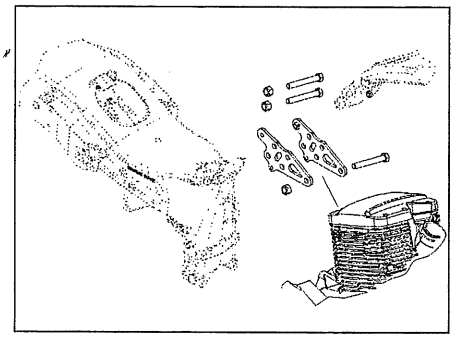

32. Install Engine Mounting Plates PV-48737 in place of original upper rear engine mount plates using four of the 5 bolts removed in previous step (see Special Tools, page 6.2). Torque bolts to specification.

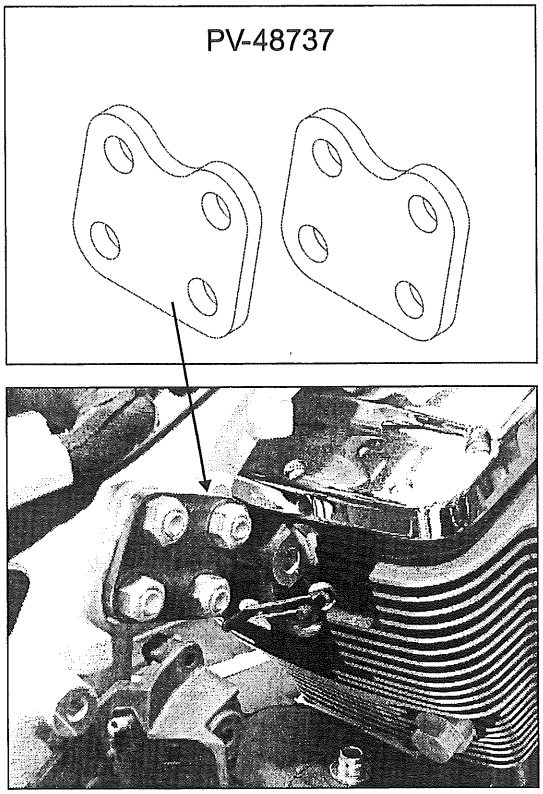

TORQUE
Engine Mounting Plate Bolts: **82 ft-lb (111 Nm)**

33. After PV-48737 plate fasteners are tightened, remove front upper engine mount bolts and plates.

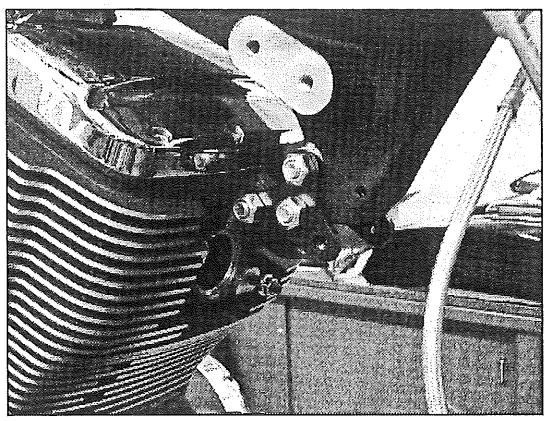

34. Remove the swingarm pivot shaft nut and washer from the RIGHT side.

NOTE

The (4) lower engine mount bolts will contact the swingarm and cannot be removed until swingarm is removed.

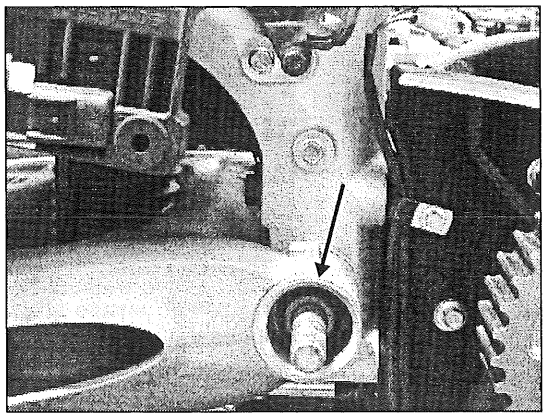

35. Support the rear frame with a shop crane or an overhead hoist. *Be sure the front wheel is secured in the wheel vise, and the engine is properly supported and secured on the platform lift.*

36. Remove lower shock bolt and lower strut bolt (G).

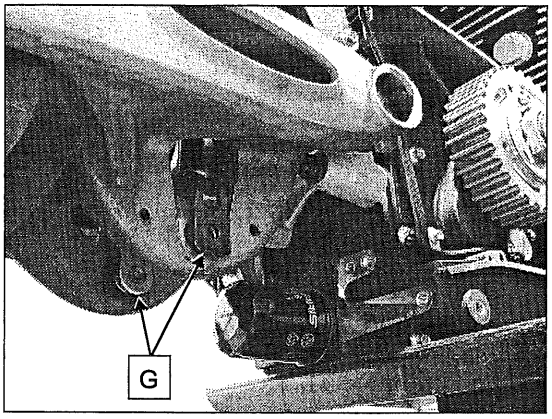

37. Push swingarm pivot shaft out with a suitable drift, and lower the front of the swingarm to the work bench.

38. Completely remove the (4) lower rear engine mount bolts (H) with a 16mm socket.

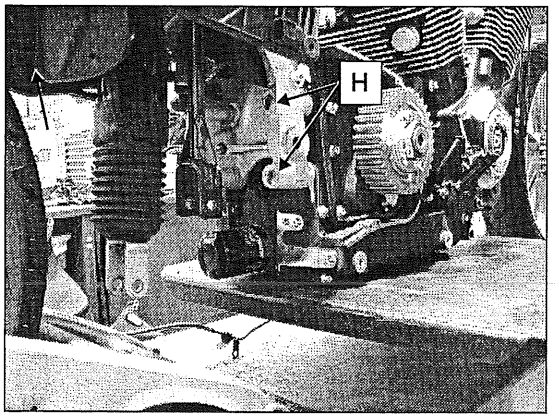

39. When all fasteners have been removed, ensure all hoses, wiring and other components have been disconnected or removed.

NOTE

Injector wires are easier to disconnect, reconnect, and secure to the fuel rail when engine and throttle body are lowered out of the air box / frame. It is not necessary to disconnect the injector wires at this time.

40. Slowly lower engine and move it forward slightly to release engine from rear crankcase alignment pins.

41. When engine is free of frame and alignment pins, carefully lower it enough to allow throttle body adaptor to clear the airbox/frame assembly. Place clean shop towels in the intake to prevent contamination.

42. With engine lowered, cut tie straps (I) that secure the front and rear injector wire harness to the fuel rail.

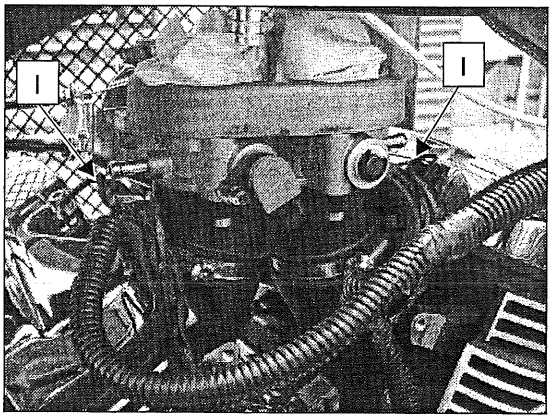

43. Lift red lock tab on injector harness connector. Push black tab to remove harness from injector. Be sure injectors are aligned properly after re-connecting wires upon installation (see Fuel Rail / Fuel Injector Removal, page 5.39).

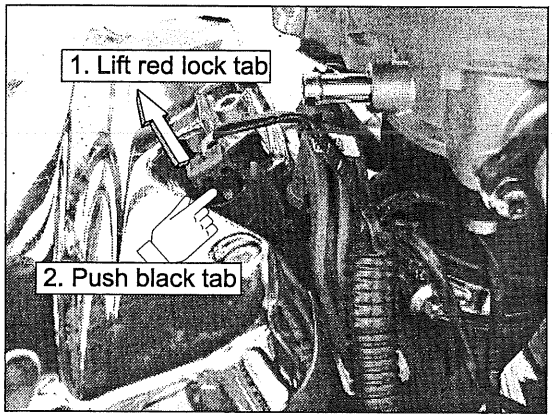

44. Lower the engine and remove out the right side.

45. Cover any openings with a clean shop towel to prevent contamination.

46. Temporarily re-install swingarm, shock, and strut if necessary so vehicle can be moved.

NOTE

Attach engine securely to an engine stand to prevent damage and for ease of disassembly. Use spacers as needed for stand you are using. If crankcases will be separated, use two left crankcase mounts only.

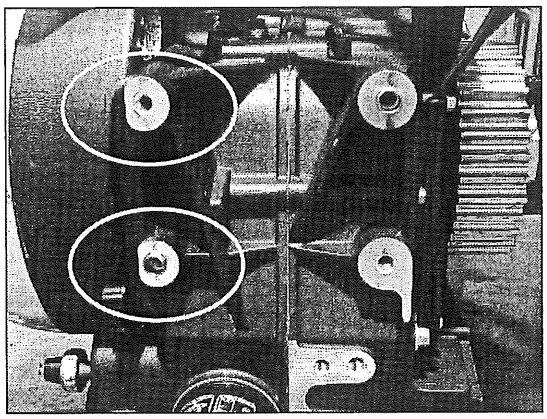

INJECTOR REMOVAL

NOTE

Debris could have collected in and around injector cavities. If injector removal is required, clean cavity and surrounding area with compressed air before removing injectors. If removed, injectors must be indexed properly to the fuel rail (aligned) to ensure proper spray pattern.

See Fuel Rail Installation, page 5.39 for injector installation.

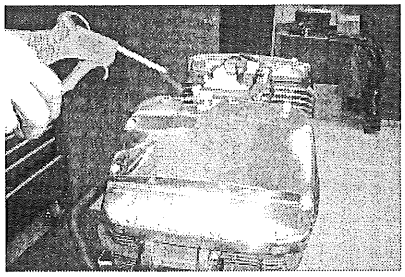

ENGINE INSTALLATION

PREPARATION FOR INSTALLATION

Refer to Engine Mounting - Airbox / Main Frame Assembly, page 6.3 for torque values and assembly views.

CAUTION

Arrange for assistance when installing engine. The engine must be held securely and aligned properly to prevent damage to engine, frame, wiring, or hoses. The engine is very heavy and could cause severe personal injury if not handled properly. Be sure engine is properly supported before proceeding.

NOTE

Be sure alignment pins are in place on engine crankcase.

INSTALLATION PROCEDURE

1. Clean mating surfaces of rear sub frame and engine crankcase. Lightly grease the alignment pins.
2. Move engine on a table lift into position through RIGHT side.
3. Move the lift until the throttle body adaptor is centered and aligned under the air box seal.

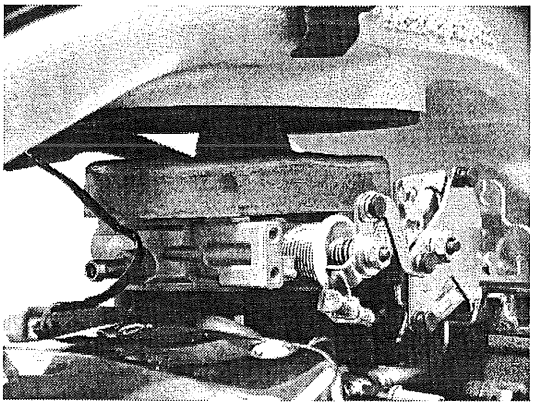

4. Connect both front and rear injectors.

NOTE

White / Gray injector wire is Rear cylinder; White / Blue is Front cylinder.

5. Route front injector wire harness along top of fuel rail toward throttle reel. Secure harness to the fuel rail with a tie strap (A) located about 6mm (1/4 inch) past the IAC fitting, on the throttle reel side.

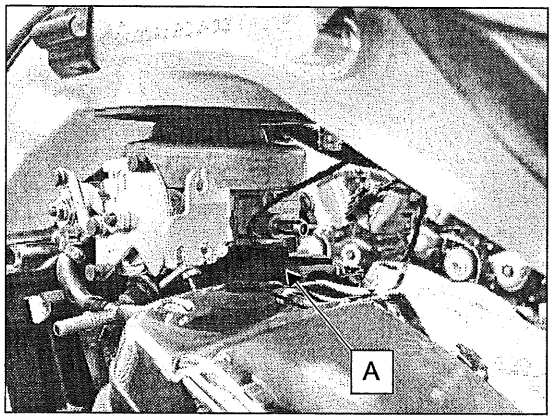

6. Route rear injector wire harness along top of fuel rail toward throttle reel. Secure harness to the fuel rail with a tie strap (B) located about 6mm (1/4 inch) past the IAC fitting, on the throttle reel side.

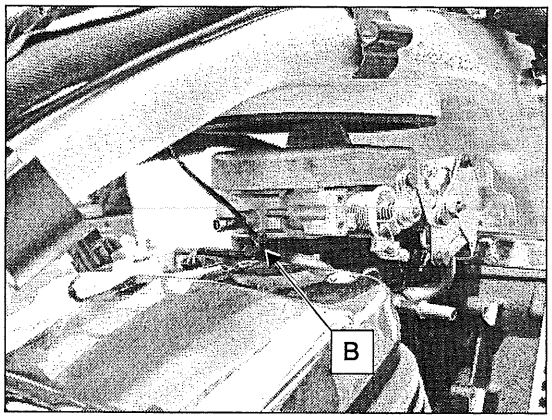

7. Attach a shop crane or an overhead hoist to the rear frame section.
8. Remove swingarm pivot shaft and lower shock and strut bolts (if they were re-installed after engine removal) and lower the swingarm to the work bench.
9. Apply a rubber lubricant (sparingly) or a light film of oil to the throttle body adaptor and air box seal.

10. Raise engine until throttle body adaptor (C) is fully engaged and flush with the airbox seal (D). Be sure seal is not rolled, folded, or misaligned.

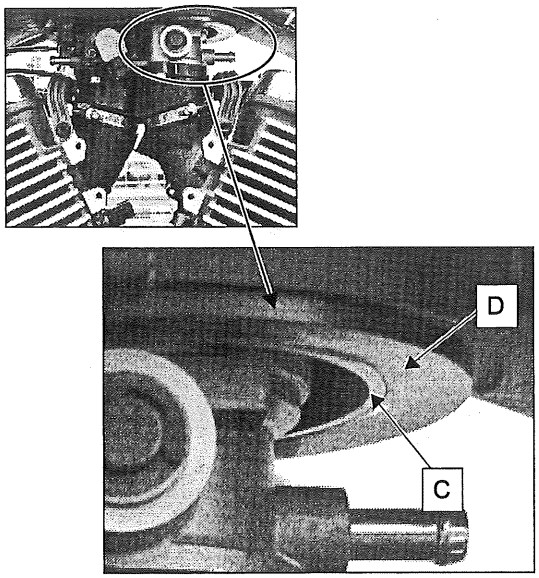

11. Use the crane or overhead hoist to adjust the height of the rear frame section and align the rear mounting bolt holes.

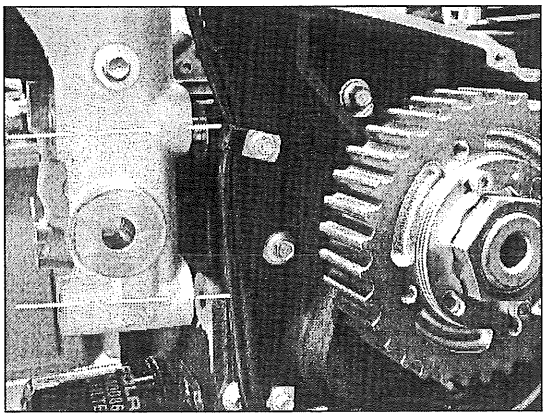

12. When alignment is correct, install all (4) lower rear bolts.

CAUTION
Be sure engine is aligned at the proper height and angle with the bolt holes. DO NOT force engine alignment using the mounting bolts or the crankcase threads, rear sub frame, or alignment pins may be damaged!Adjust engine height and angle continuously as required while drawing up the bolts.

13. Tighten rear engine mount bolts to draw engine flat against sub frame and onto alignment pins. Tighten all 4 bolts to specification.

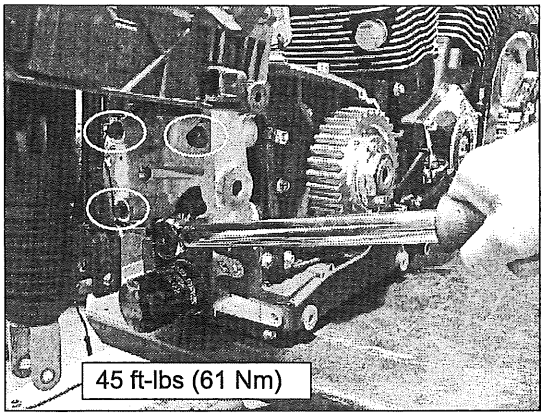

TORQUE
Rear Engine Mount Bolts: **45 ft-lb (61 Nm)**

14. Grease right side swingarm needle bearing and both seals, and install bearing sleeve.
15. Be sure stepped spacers are in place on the spherical bearings on the swingarm (for lower shock and strut mounts).
16. Lift swingarm while aligning lower shock and strut clevis over the stepped spacers and spherical bearings. Install bolts and loosely install nuts.

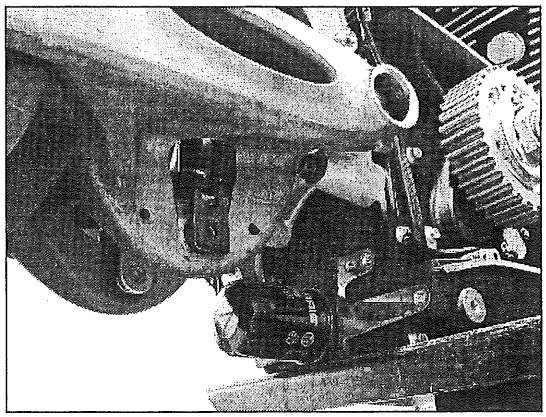

17. Raise or lower the rear crane or overhead hoist as required to align the swingarm with the pivot shaft bore on frame, and install the pivot shaft.

18. Install washer and nut on right side of pivot shaft. Torque nut to specification.

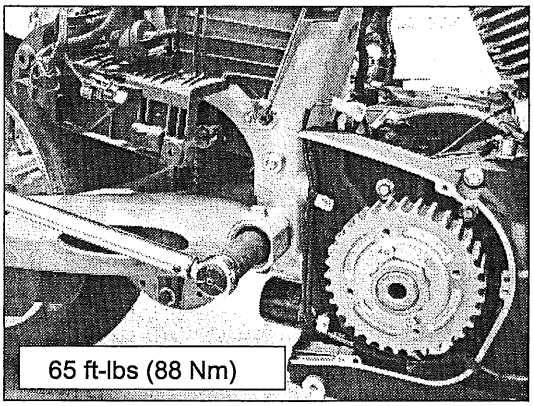

TORQUE
Pivot Shaft Nut: **65 ft-lb (88 Nm)**

19. Torque lower shock and strut bolts to specification.

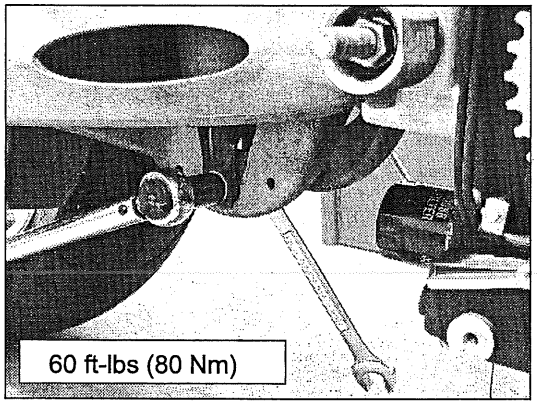

TORQUE
Lowe rShock / Strut Bolts: **60 ft-lb (80 Nm)**

20. Lower and remove the rear frame crane or hoist.
21. Install front upper engine mount plates.
22. Torque all front mount bolts to specification.

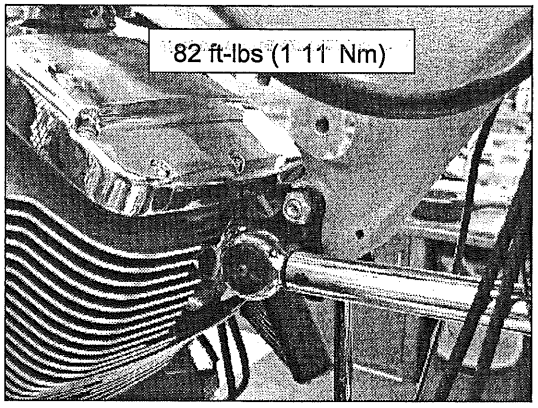

TORQUE
Front Engine Mount Bolts: **82 ft-lb (111 Nm)**

23. Remove the PV-48737 Engine Mount Plates from the upper rear mount.
24. Install original rear upper engine mount plates and tighten all bolts evenly hand tight.
25. Torque all upper rear mount bolts to specification.

TORQUE
Upper Rear Engine Mount Bolts: **82 ft-lb (111 Nm)**

26. Install M6 screw (E) in top of side panel on each side. Torque to specification.

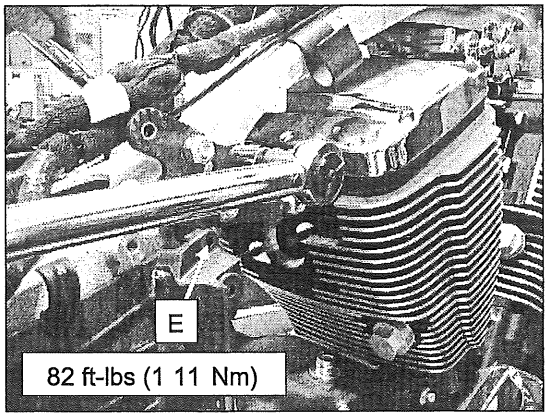

TORQUE
Side Panel Screws: **48 in-lb (5 Nm)**

27. Remove platform jack or platform lift.

ENGINE ATTACHMENTS & NOTES

1. Route oil pressure sensor wire behind engine and toward the sensor on the left rear crankcase. Attach sensor wire to sensor and secure it to the left rear crankcase with a tie strap through hole (F) provided.

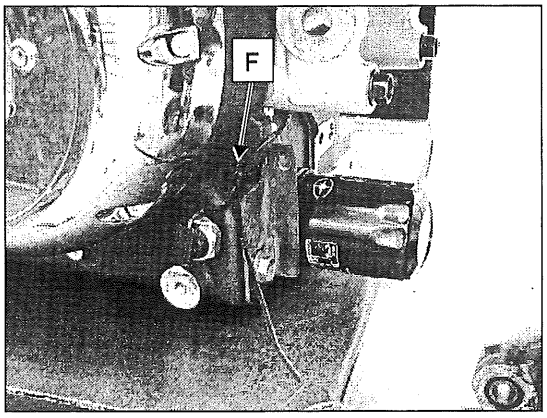

2. Install throttle cables onto cable bracket (dark cable is PULL cable and located on the bottom). Torque nuts to specification. Adjust cable free play (see Throttle Cable Free Play, page 2.13).

TORQUE
Throttle Cable Nuts: **48 in-lb (5 Nm)**

3. Connect cruise cable to throttle reel (if equipped) and snap cable securely into bracket.
4. Route wire harnesses to general location and connect:

- Ground wires to left rear crankcase **87 in-lbs (10 Nm)**.
- Engine temperature sensor
- TMAP sensor
- CPS
- Speed sensor
- TPS
- Horn and bracket

5. Install engine breather hose.
6. *Loosely* install front left and right frame cradles with alignment pins (G) and M10 bolts (H).
7. Move rear brake line, battery box, and master cylinder to general mounting location.
8. Install a new dart strap for brake line (if removed) to right rear side of battery box.
9. Loosely install (3) screws (I) & (J) through front of each frame cradle to battery box.

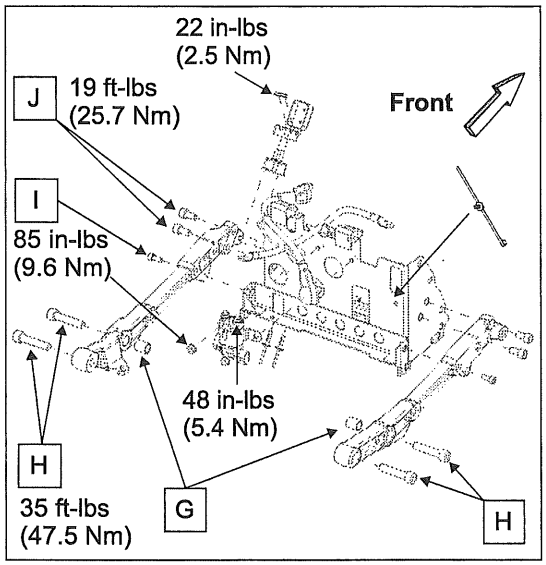

10. Fully tighten left and right frame cradle bolts (H) to engine.

6

11. Fully tighten left and right battery box screws (I & J).
12. Install starter motor lead and torque to specificaton.

TORQUE
Starter Motor Wire Nut: **60 in-lb (7 Nm)**

13. Install regulator/rectifier to engine (if removed) and torque fasteners to specification. Connect 3-Pin stator connector.

TORQUE
Regulator/Rectifier: **85 in-lb (10 Nm)**

14. Install harness ground wires and regulator rectifier ground wire to engine. Torque screw to specification.

TORQUE
Harness/Regulator Ground Wires: **85 in-lb (10 Nm)**

15. Attach removed wires to circuit breaker terminal and torque nut to specification.

TORQUE
Circuit Breaker Terminal: **25 in-lb (3 Nm)**

16. Install oil cooler (see Oil Cooler / Oil Line Installation, page 4.6).
17. Install drive sprocket (if removed). Torque to specification. (See Drive Sprocket And Seal Installation, page 11.8).

TORQUE
Drive Sprocket: **180 ft-lb (244 Nm)**

18. Install drive belt and sprocket cover. Torque cover bolts to specification.

TORQUE
Sprocket Cover Bolts: **85 in-lb (10 Nm)**

NOTE
Drive belt is installed with "VICTORY" readable from right side. Do not kink or twist the drive belt.

19. Adjust belt tension and tighten axle nut (see Drive Belt Adjustment / Alignment, page 2.28).
20. Install new exhaust head pipe gaskets.
21. Install head pipe assembly along with right side passenger footrest bracket as an assembly.
22. Loosely install head pipe flange nuts, lower footrest bracket bolt, and footrest bracket nut with washer.
23. Tighten fasteners in the following sequence:

- Draw rear head pipe bracket (A) against crankcase with lower passenger footrest fastener (B) then back off fastener 1/4 turn.
- Tighten head pipe flange nuts (C) evenly.
- Tighten footrest bracket nut (D).
- Tighten lower footrest bracket fastener (B).
- Tighten head pipe clamp (E).
- Tighten screw (F).
- Install mufflers with shields (see Assembly View - Exhaust Complete, page 3.46).

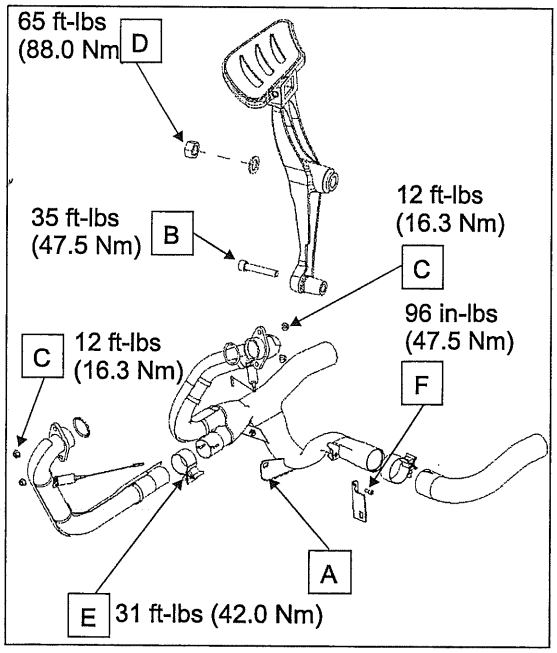

24. Install clutch cable to bracket on crankcase and connect cable to lifter arm.

TORQUE
Clutch Cable: **48 in-lb (5 Nm)**

25. Install rear brake line guide to swingarm (K) and line clamp (L) to left frame cradle.

26. Install rear master cylinder onto brake pedal support. Torque mounting bolts (M) to specification.

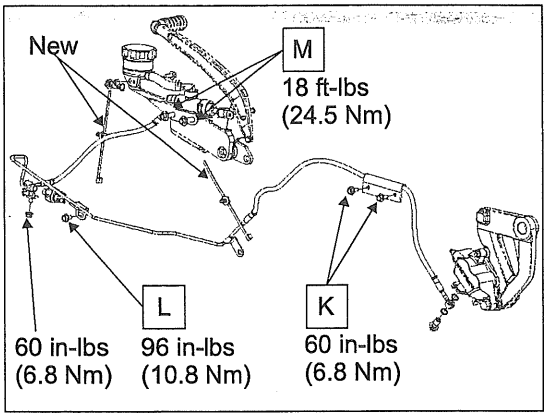

TORQUE
Master Cylinder to Pedal Support: **18 ft-lb (24 Nm)**

27. Install right floorboard assembly. Torque bolts (N) to specification.

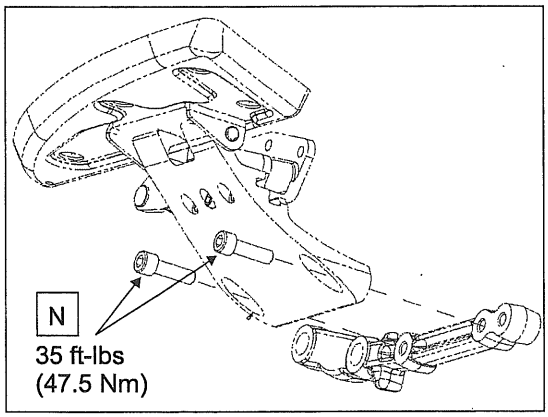

TORQUE
Floor Bolts: **35 ft-lb (48 Nm)**

28. Install left floor board assembly with shift arm.

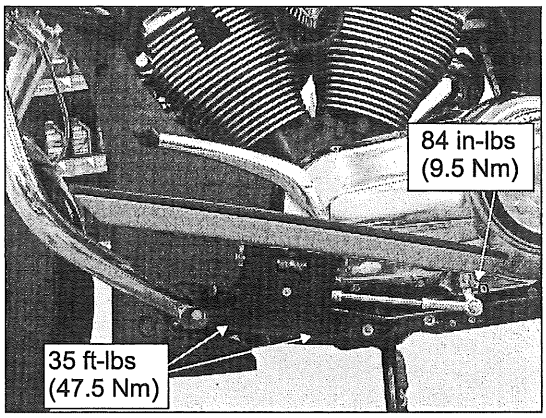

29. Install battery (see Battery Installation, page 2.23).
30. Apply dielectric grease to battery terminals and connect battery cables. Torque terminal bolts to specification.

TORQUE
Battery Cable Terminals: **40 in-lb (5 Nm)**

31. Install chin fairings (see Chin Fairing (Inner Grill), page 3.22).
32. Install highway bars (see Highway Bars, page 3.23).
33. Install fuel tank (see Fuel Tank Installation, page 5.20).
34. Secure clutch cable with a tie strap to upper right engine mount bracket with lower wire harness (O) and evaporative emission purge valve hose (P) (California models).

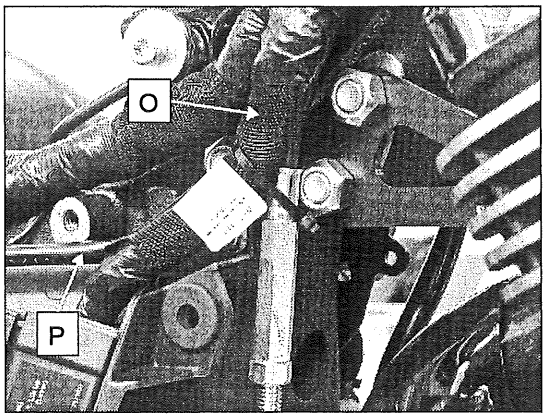

35. Secure engine and chassis wire harness to left upper engine mount plate with a tie strap (Q).

36. Two tie straps secure upper and lower branches (R) of harness under left side cover.

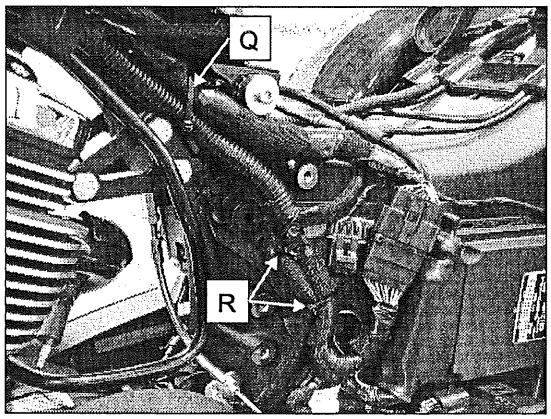

37. Install saddlebags (see Saddlebag Assembly View (non-audio), page 3.32).
38. Install new oil filter and fill crankcase to proper level with Victory engine oil (Oil Change Specifications, page 2.4).
39. Inspect operation of all cables and controls and adjust (Throttle Cable Inspection / Lubrication, page 2.12).
40. Add fuel to fuel tank and prime fuel system (see Priming The Fuel System, page 5.17).
41. Start engine and inspect for oil leaks.
42. Pump front brake lever and rear brake pedal to seat pads against disc. Test brakes to be sure operation and pedal pressure are normal. Bleed brake system if necessary (see Brake Fluid Replacement & Bleeding Precautions, page 15.20).
43. Test ride motorcycle; check all systems for proper operation.
44. When test ride is completed, again check entire vehicle and engine for fluid leaks and be sure all fasteners have been properly tightened.
45. Inspect oil level and adjust if necessary.

CHAPTER 7
CYLINDER HEAD / VALVES

GENERAL INFORMATION 7.2
IMPORTANT NOTES 7.2
SPECIAL TOOLS 7.2
SPECIFICATIONS 7.3
TORQUE VALUES AND ASSEMBLY VIEWS 7.4
CAM DRIVE & VALVE COVER 7.4
CAMSHAFT CARRIER / ROCKER ARM 7.5
CYLINDER HEAD 7.6
CAMSHAFT TIMING QUICK REFERENCE 7.7
CYLINDER HEAD SERVICE 7.8
CAMSHAFT DRIVE COVER 7.8
VALVE COVER REMOVAL 7.8
VALVE COVER INSTALLATION 7.8
CAM CHAIN TENSIONER REMOVAL 7.8
CAM CHAIN TENSIONER INSPECTION 7.10
CAM CHAIN TENSIONER INSTALLATION 7.10
CAMSHAFT CHAIN & SPROCKET REMOVAL 7.10
CAMSHAFT CARRIER REMOVAL 7.11
ROCKER ARM & SHAFT INSPECTION 7.12
CAMSHAFT INSPECTION 7.12
CYLINDER HEAD REMOVAL 7.13
CYLINDER HEAD DISASSEMBLY 7.14
CYLINDER HEAD INSPECTION 7.15
VALVE SPRING FREE LENGTH INSPECTION 7.15
VALVE INSPECTION 7.15
VALVE INSPECTION CHART 7.17
VALVE GUIDE REMOVAL / INSTALLATION 7.17
VALVE SEAT INSPECTION 7.18
VALVE SEAT RECONDITIONING 7.18
CYLINDER HEAD ASSEMBLY 7.19
CYLINDER HEAD ASSEMBLY 7.20
CYLINDER HEAD / CAMSHAFT INSTALLATION 7.21
CAMSHAFT TIMING - REAR CYLINDER 7.22
CAMSHAFT CHAIN GUIDE INSTALLATION 7.23
CAMSHAFT TIMING - FRONT CYLINDER 7.24
TROUBLESHOOTING CYLINDER HEAD AND VALVE TRAIN 7.27

GENERAL INFORMATION

IMPORTANT NOTES

- This section covers service of the cylinder heads, camshafts, cam chains and tensioners, cam chain guides and rocker arms. Cam chain tensioners can be serviced with the engine in the frame. Most other cylinder head components require engine removal.
- Refer to Removal Procedure, page 6.4 for engine removal and installation.
- If cylinder heads are removed the cylinder base gasket must be replaced also.
- Head and base gasket replacement is recommended if camshaft carrier fasteners are loosened or removed. The 1-piece camshaft carrier design on these engines uses common fasteners for the carrier, the cylinder head, and the cylinder.
- Mark and store all mating parts for correct engine assembly.
- Use Moly Assembly Paste P/N 2871460 or Victory Semi-Synthetic 20W/40 Engine Oil P/N 2872176 to lubricate parts where indicated.
- Handle and store all parts in such a way that they will not be damaged or contaminated.
- Some fasteners have a pre-applied locking agent, and must be replaced if loosened or removed. Always replace fasteners that have a pre-applied locking agent or as directed in this service manual.
- There are some precision machining steps to be performed in this section. If you are not sure of your capabilities in these areas, have a competent machinist perform these operations.
- Valve guide and seat reconditioning should be performed by a technician proficient in cylinder head reconditioning techniques using high quality equipment with grinding stones. Do not attempt cylinder head repair without the proper equipment or experience in cylinder head reconditioning techniques.
- The intake and exhaust valves cannot be re-faced.
- Cleanliness of parts is critical to engine life and accurate parts inspection. Use clean solvent to clean all disassembled parts. Dry parts with compressed air and lubricate before engine inspection and engine assembly.

SPECIAL TOOLS

SPECIAL TOOL	PART NUMBER
Valve Spring Compressor	PV-1253 or PV-4019 with adapter PV-43513-A
Crankshaft Rotation Socket	PV-48736
8mm or 5/16 pin punch	(Commercially available)
Engine lock Tool	PV-43502-A

SPECIFICATIONS

CYLINDER HEAD	Valve Train	SOHC / 2 Intake valves / 2 Exhaust valves
	Intake Valve Opens At 1 mm Lift	1° BTDC
	Intake Valve Closes At 1 mm Lift	27° ABDC
	Exhaust Valve Opens At 1 mm Lift	33° BBDC
	Exhaust Valve Closes At 1 mm Lift	-5° ATDC (5° BTDC)
	Max Lobe Lift (In / Ex)	7.26 mm / 7.07mm
	Max Valve Lift (In / Ex)	10 mm / 10 mm

Cylinder Head & Valve Train

ITEM		STANDARD	SERVICE LIMIT
Cam Chain Tensioner	(Hydraulic)	-	-
Cam Shaft	Lobe Height (IN) (EX)	40.259 mm (1.5850") 40.060 mm (1.5772")	40.159 mm (1.5811") 40.02 mm (1.5732")
	Oil Clearance	.036 mm to .086 mm (.0014" to .0034")	
	Journal O.D. (Small)	23.96 - 23.98 mm (.943 - .944")	23.93 mm (.942")
	Journal O.D. (Large)	48.464 - 48.484 mm (1.9080 - 1.9088")	48.434 mm (1.9068")
Cylinder Head	Warp (Distortion)	-	.10 mm max. (.004")
Rocker Arm, Shaft, & Lifter	Rocker Arm Bore I.D. IN/EX	12.01 - 12.03 mm (.473 - .474")	12.065 mm (.475")
	Rocker Arm Shaft O.D. IN/EX	11.974 - 11.986 mm (.471-.472")	11.944 mm (.470")
	Rocker Arm to Rocker Arm Shaft Clearance IN/EX	.024 - .056 mm (.001 - .0022")	.156 mm (.006")
Valve, Valve Guide, Valve Seat	Valve Clearance	Hydraulic/Self Adjusting	-
	Valve Guide Installed Height (See illustration on Cylinder Head Assembly, page 7.19)	12.2-12.8mm (.480-.504")	41.40 mm (1.630")
	Valve Stem O.D. (IN) (EX)	6.953 - 6.973 mm (.2737 - .2745") 6.950 - 6.970 mm (.273 - .274")	6.933 mm (.2729") 6.928 mm (.2727")
	Valve Stem Deflection	-	.13 mm max. (.005")
	Valve Seat Width Intake	1.2 mm (.047")	-
	Valve Seat Width Exhaust	1.75 mm (.068")	-
	Valve Stem Runout	-	.13 mm max. (.005")
	Valve Head Radial Runout	-	.05 mm max. (.002")
	Valve Installed Height (See illustration onCylinder Head Assembly, page 7.19)	INTAKE: 49.31 - 50.31 mm (1.941 - 1.981") EXHAUST: 48.78 - 49.78 mm (1.920 - 1.960")	–
Valve Spring	Free Length IN/EX	43.36 mm (1.708")	41.40 mm (1.630")
	Intake Valve Maximum Lift	10.0 mm (.393")	–
	Exhaust Valve Maximum Lift	10.0 mm (.393")	–
	Spring Installed Height (See illustration on Cylinder Head Assembly, page 7.19)	34.20 - 36.20 mm (1.346 - 1.425")	–

TORQUE VALUES AND ASSEMBLY VIEWS

CAM DRIVE & VALVE COVER

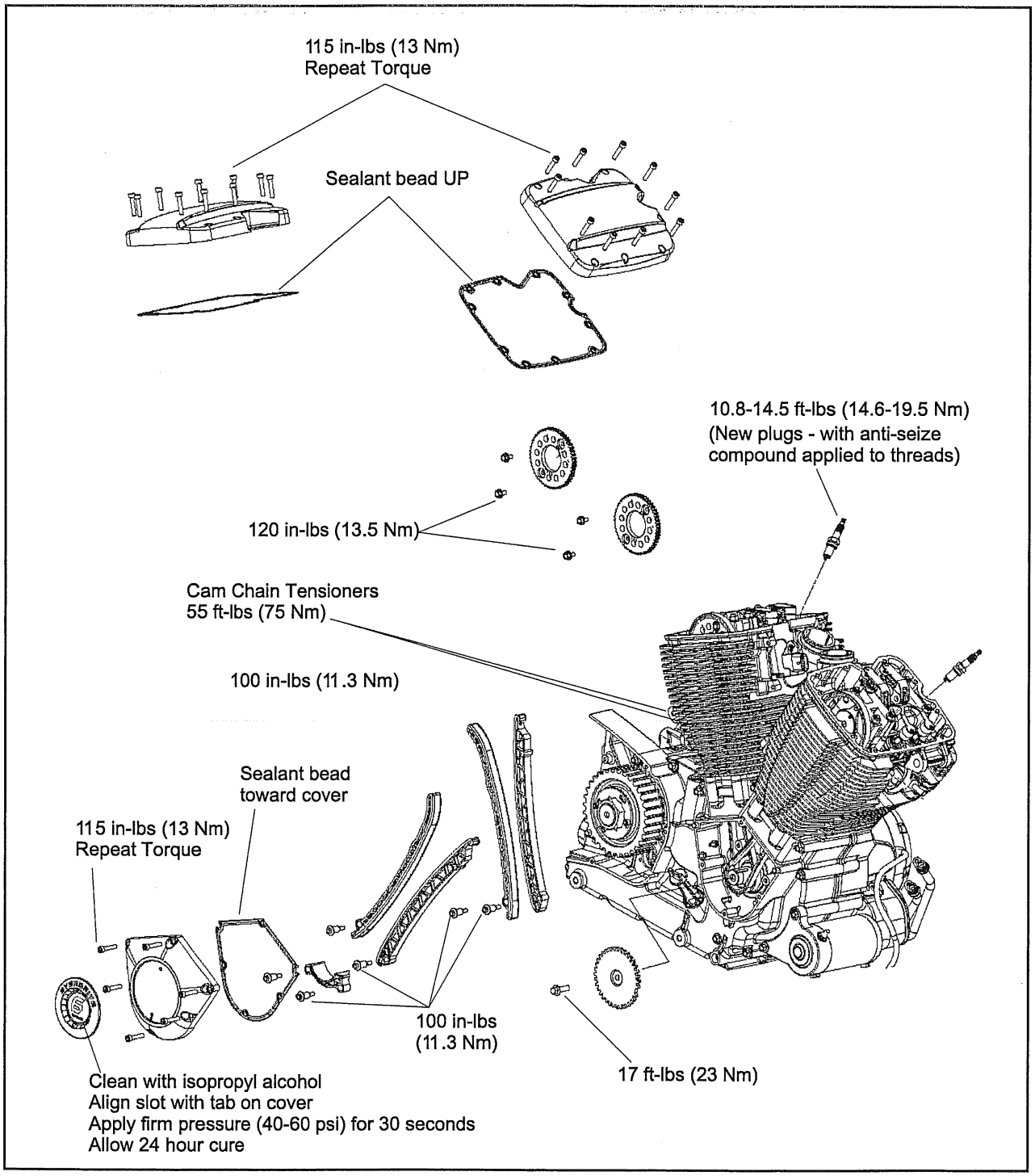

CAMSHAFT CARRIER / ROCKER ARM

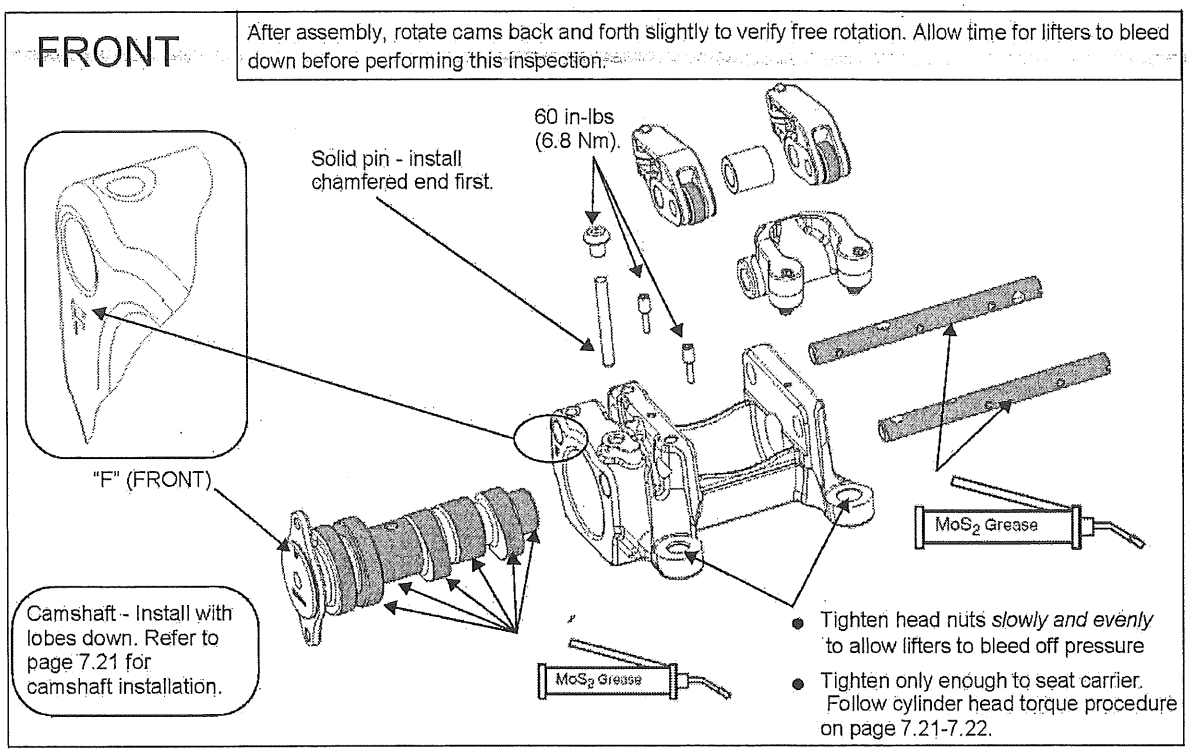

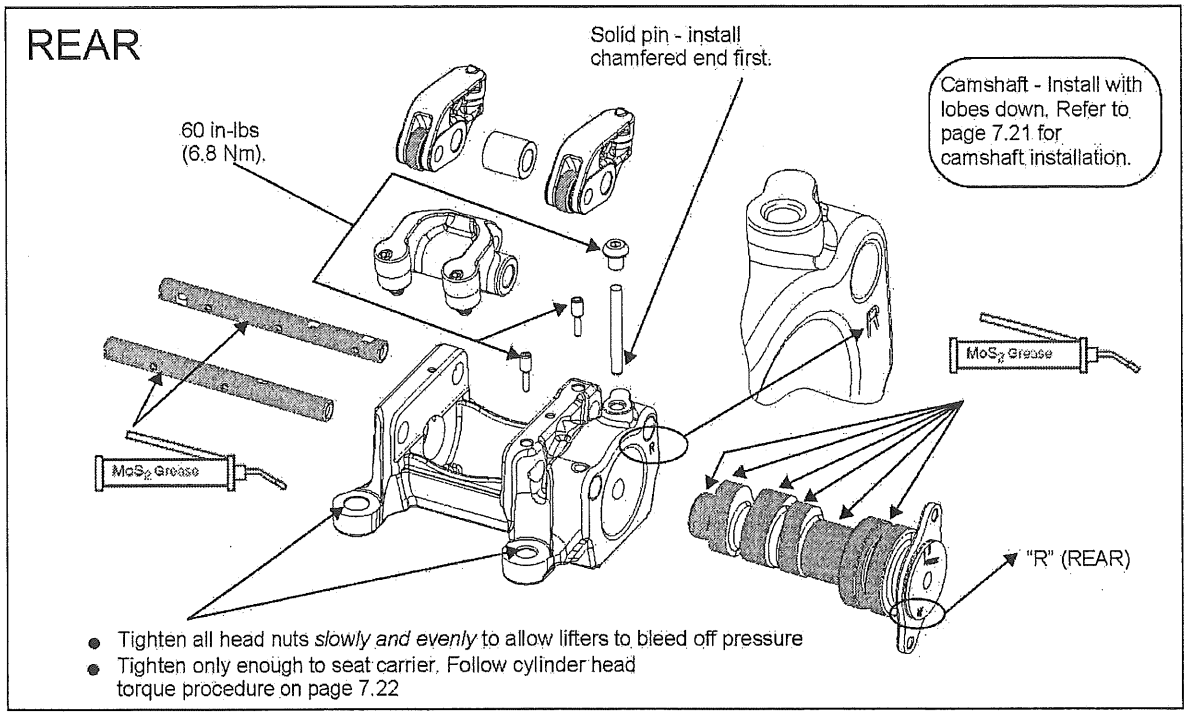

7

CYLINDER HEAD

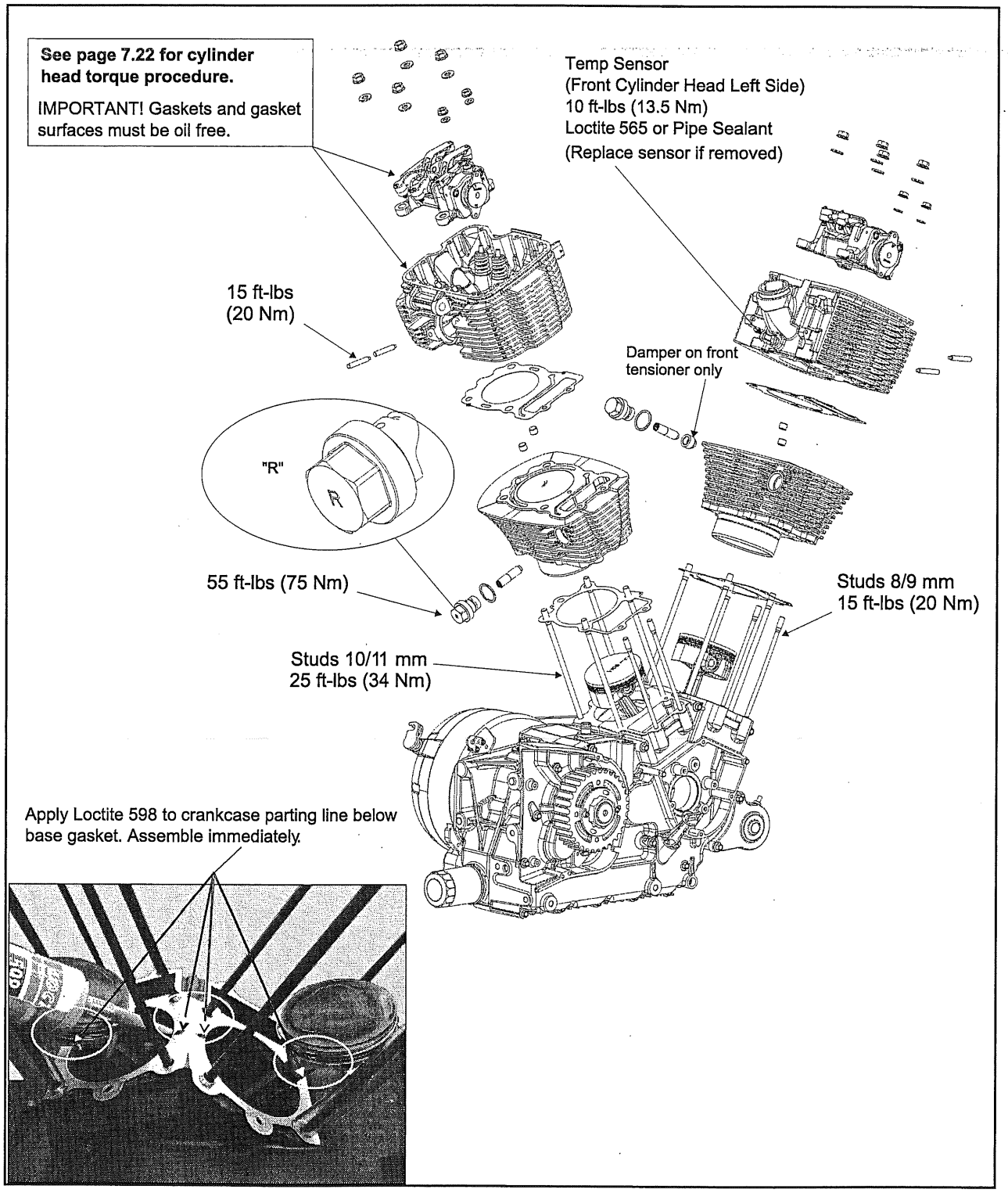

CAMSHAFT TIMING QUICK REFERENCE

Use this page as a reference ONLY if you are familiar with the cam timing procedure.

Refer to Page 7.23 for complete camshaft timing procedure

The illustration below shows final cam timing configuration.
The rear cylinder has been timed and the crankshaft rotated 410° from rear TDC.

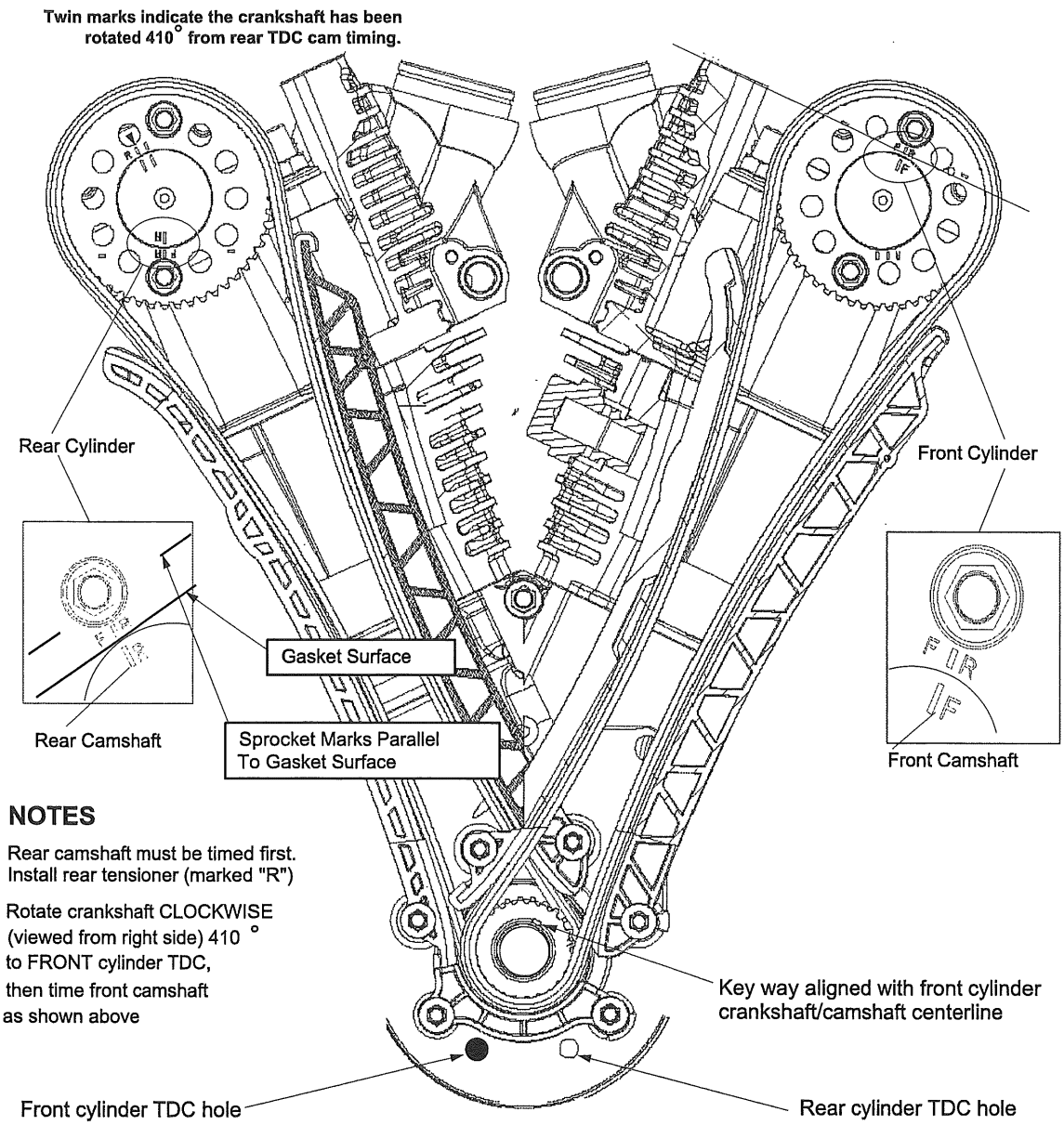

NOTES

Rear camshaft must be timed first.
Install rear tensioner (marked "R")

Rotate crankshaft CLOCKWISE (viewed from right side) 410 ° to FRONT cylinder TDC, then time front camshaft as shown above

Ill. 1

7

CYLINDER HEAD SERVICE

CAMSHAFT DRIVE COVER

1. Remove cam drive cover.
2. Remove CPS timing wheel.

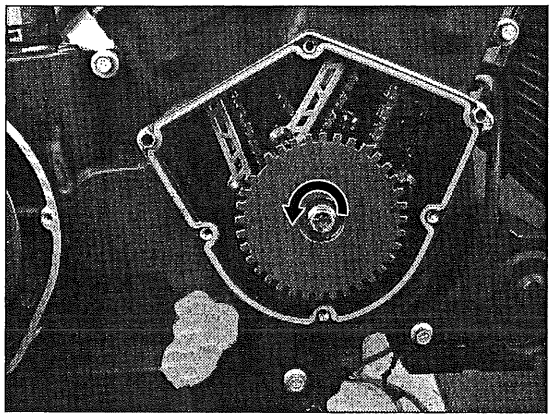

3. Place shop towel in cavity below cam drive sprocket to prevent objects from falling into crankcase.

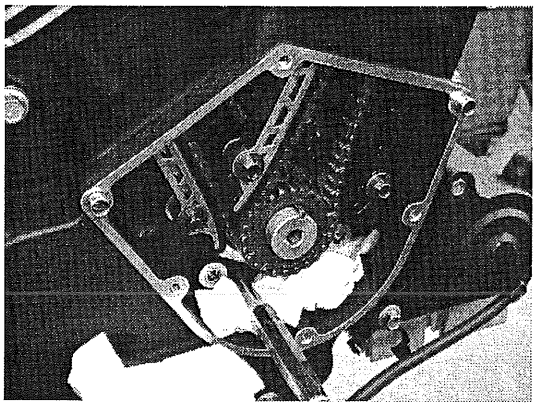

4. Rotate engine to front or rear TDC using Crankshaft Rotation Tool PV-48736.
5. Insert 8mm (5/16) pin at front or rear cylinder TDC to prevent engine rotation. See Camshaft Chain Guide Installation, page 7.23

CAUTION
Do not rotate engine with cam chain tensioner(s) removed.

VALVE COVER REMOVAL

1. Engine removal is required. Refer to Removal Procedure, page 6.4.
2. Remove all valve cover screws.
3. Tap cover with a soft faced hammer until loose.
4. Remove cover and gasket.

VALVE COVER INSTALLATION

1. Install gasket with sealant bead UP (toward cover) on clean, dry surfaces.
2. Install all screws ① and tighten evenly in a cross pattern.

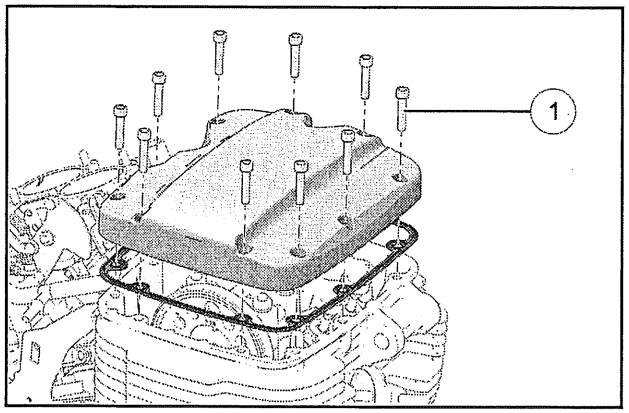

TORQUE
Valve Cover Screws: **115 in-lbs (13 Nm)**

CAM CHAIN TENSIONER REMOVAL

CAUTION
Do not rotate engine with tensioner(s) removed.

1. Remove tensioner body ①, sealing washer ② and damper sleeve ③ (damper on FRONT cylinder only).

2. Inspect tensioner parts.

Front Cam Chain Tensioner

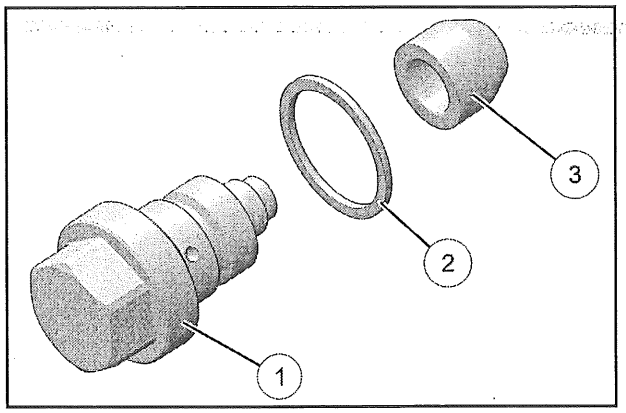

CAM CHAIN TENSIONER INSPECTION

1. Visually inspect inner plunger ① for damage, scoring, or burrs.
2. Lubricate inner plunger with engine oil. Move plunger in and out of outer plunger ② to check for smooth movement without binding.
3. Inspect damper ③ on FRONT tensioner. It should slip over inner plunger with noticeable drag, not a loose fit.
4. Replace tensioner assembly or damper if worn or damaged.

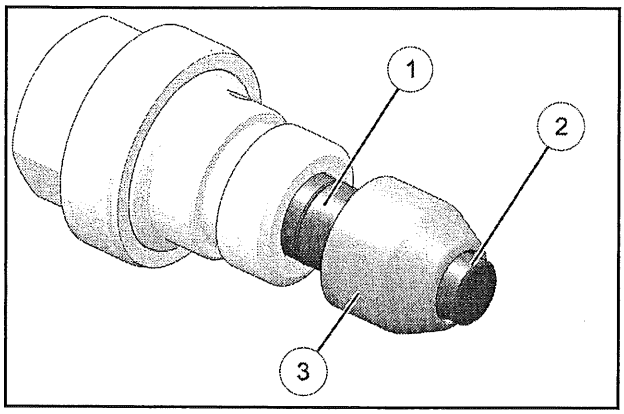

CAM CHAIN TENSIONER INSTALLATION

1. Lubricate all parts with engine oil.
2. Install damper (C) squarely into tensioner bore in cylinder, and push it past the first 4 or 5 threads.

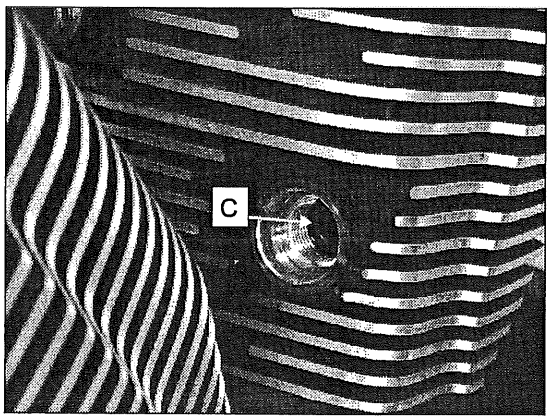

3. Install tensioner body with a new sealing washer.
4. Torque tensioner body to specification.

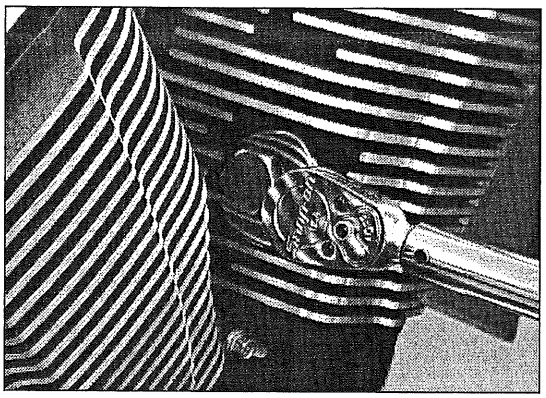

TORQUE
Cam Chain Tensioner: **55 ft-lb (75 Nm)**

CAMSHAFT CHAIN & SPROCKET REMOVAL

1. Remove engine from frame (see Removal Procedure, page 6.4).
2. Remove camshaft drive cover and CPS timing wheel (Camshaft Drive Cover, page 7.8).
3. Rotate crankshaft clockwise, past TDC on the compression stroke for front cylinder until bottom sprocket bolt (A) is accessible and remove it.

   Crankshaft Rotation Socket: PV-48736

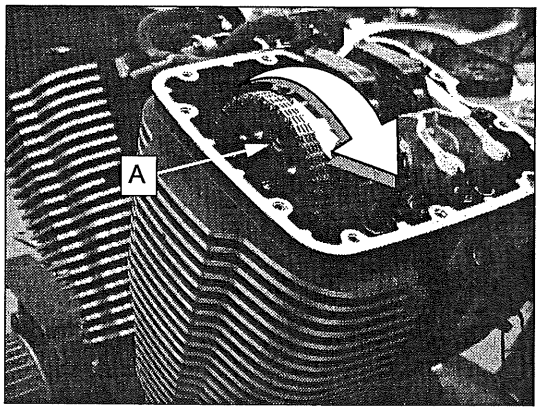

4. Rotate crankshaft clockwise back to front cylinder TDC (camshaft marks aligned with cylinder head surface) and remove top sprocket bolt (B).

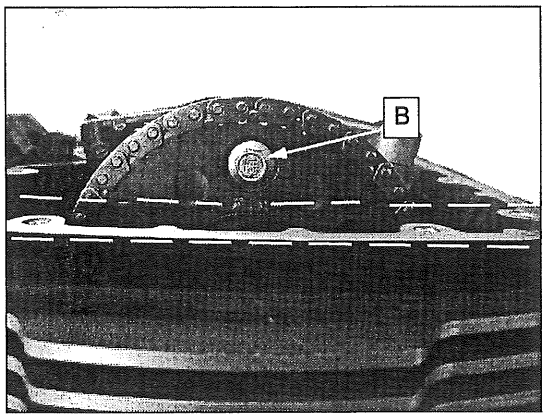

5. Remove front cam chain tensioner (Cam Chain Tensioner Removal, page 7.8).
6. Remove lower cam chain guide (below drive sprocket).
7. Remove tensioner blade bolt (C) and guide bolt (D).

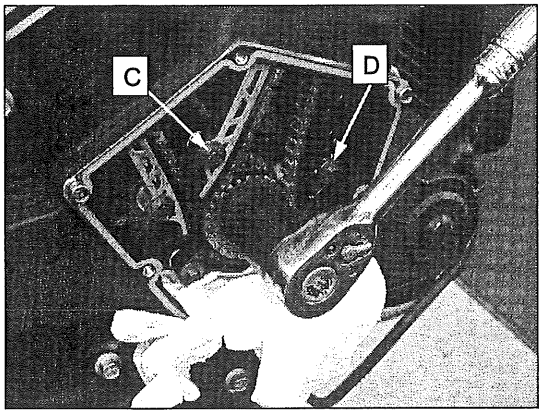

8. Remove cam chain and sprocket from camshaft and lower it between tensioner blade and guide, then remove chain from drive sprocket on crankshaft.
9. Lift chain, sprocket, tensioner blade, and guide out of engine.
10. Repeat steps for rear cylinder.

CAMSHAFT CARRIER REMOVAL

NOTE

Keep mated parts together. Mark parts as required to keep them in order.

1. Loosen camshaft carrier / cylinder head nuts (A) 1/2 turn at a time using a cross pattern until loose.

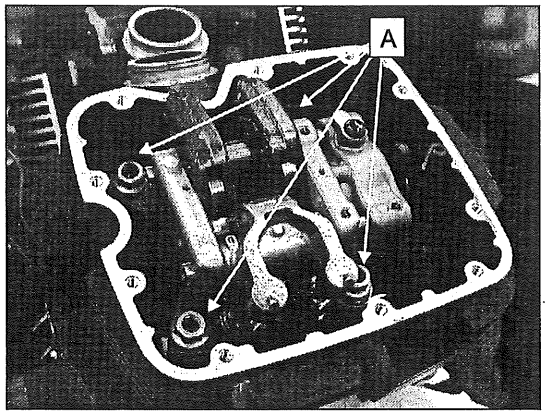

2. Remove carrier nuts and washers, then remove carrier with camshaft and rocker arms as an assembly.

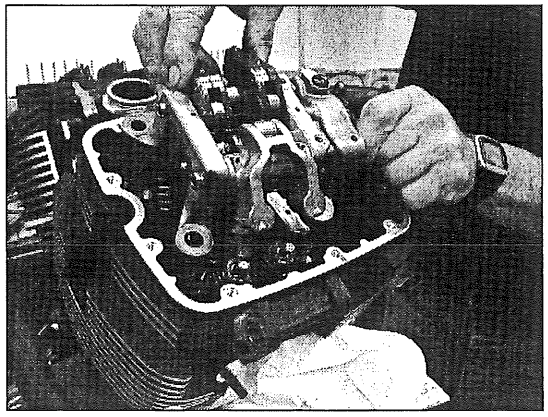

7

3. Note markings "F" or "R" on drive end of camshafts. Front and Rear cylinder heads use different camshafts.

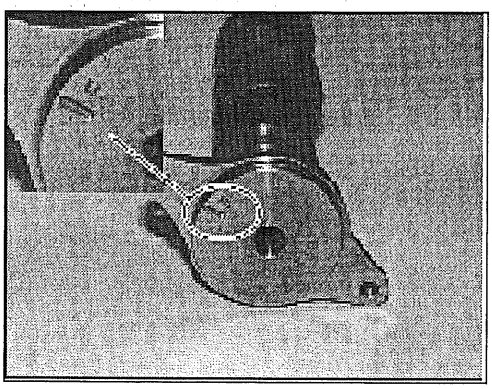

ROCKER ARM & SHAFT INSPECTION

1. Remove button head screw (B) and pin (C). Slide camshaft out of carrier.
2. Remove dog point screws (D) and tap rocker shafts out of carrier.
3. Visually inspect rocker arms and rocker arm shafts for wear, scoring, or damage.
4. Inspect all oil passages and clean thoroughly. Use only clean solvent. Do not allow debris to contaminate hydraulic lifters or rocker arms.
5. Rocker arm should fit tightly on shaft without excessive play, and rotate smoothly on shaft without binding.
6. Check roller for radial movement. Roller should have no noticeable radial movement (E).
7. Apply light pressure to roller with a flat piece of bar stock and draw the stock over the roller while observing movement. Roller should not stop, drag, or bind.

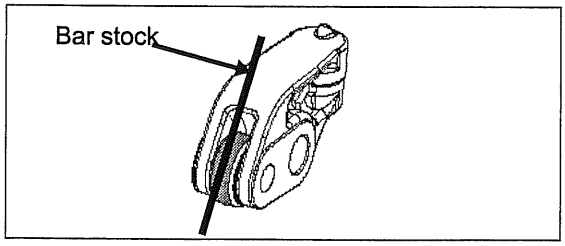

8. Measure O. D. of each rocker arm shaft (F) and compare to specification.
9. Measure I.D. of each rocker arm (G).
10. Subtract rocker arm shaft O. D. from its matching rocker arm I.D. to determine clearance. Compare to specification on Specifications, page 7.3.

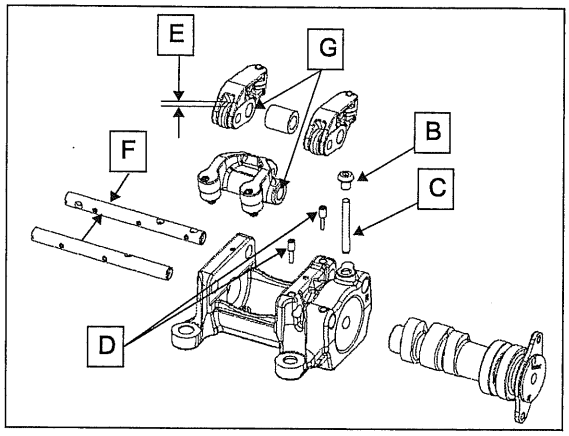

11. Replace parts worn beyond service limits.

CAMSHAFT INSPECTION

1. Visually inspect camshaft journal surfaces (A) for scoring or signs of insufficient lubrication. Replace camshaft if heavy scoring or damage is noted.

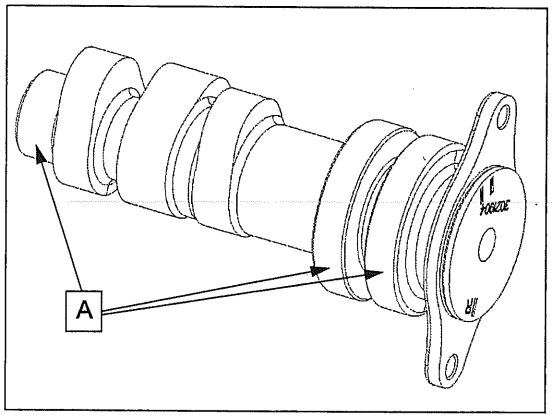

2. Measure O.D. of each camshaft journal.

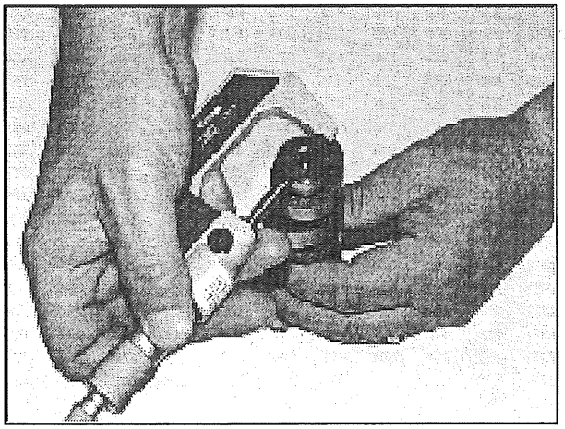

3. Inspect height of each cam lobe.

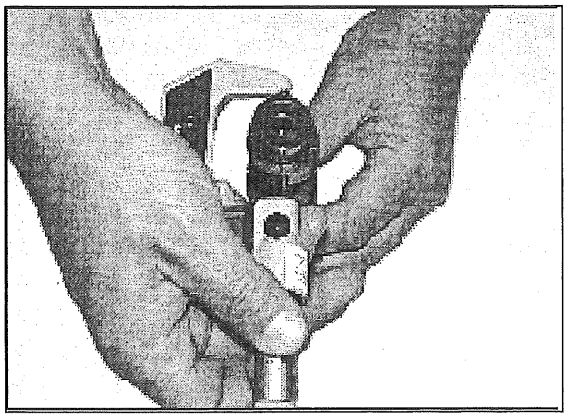

CYLINDER HEAD REMOVAL

1. Remove engine (see Removal Procedure, page 6.4), valve covers (Valve Cover Removal, page 7.8), and camshaft sprockets (Camshaft Chain & Sprocket Removal, page 7.10).
2. Remove camshafts (Camshaft Carrier Removal, page 7.11).
3. Remove cylinder head nuts and washers (A).
4. Remove cylinder head (B) head gasket (C) and alignment pins (D).

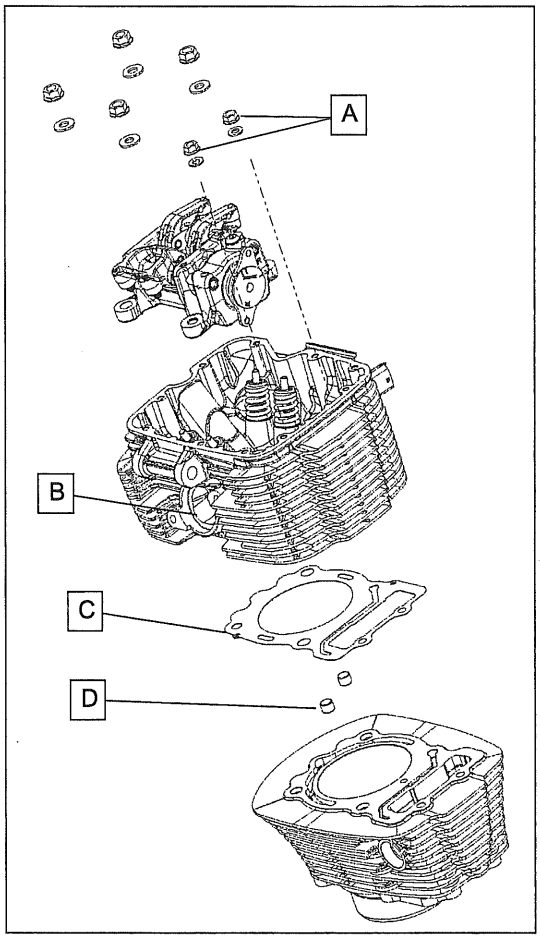

7

CYLINDER HEAD DISASSEMBLY

CAUTION

Wear eye protection while removing valve springs.

NOTE

Keep mated parts together for assembly. It is important to put cylinder head parts back in the same location. Valve Spring Compressor: PV-1253 (or PV-4019 with adapter PV-43513-A)

1. Remove the valve keepers ① using a valve spring compressor tool. Use a pencil magnet to remove valve keepers.

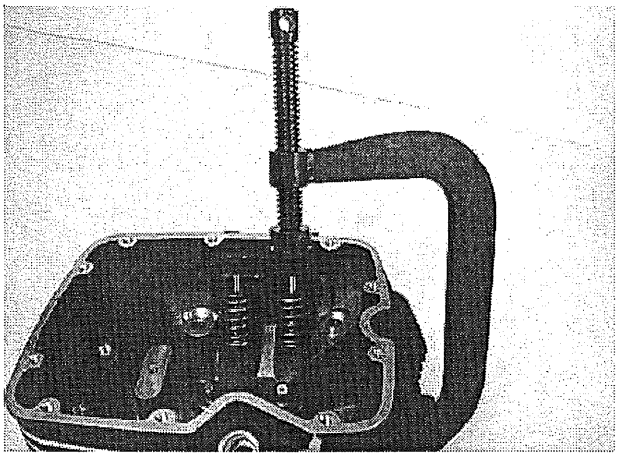

2. Remove upper valve spring retainers ②, springs ③, and valves ⑤.

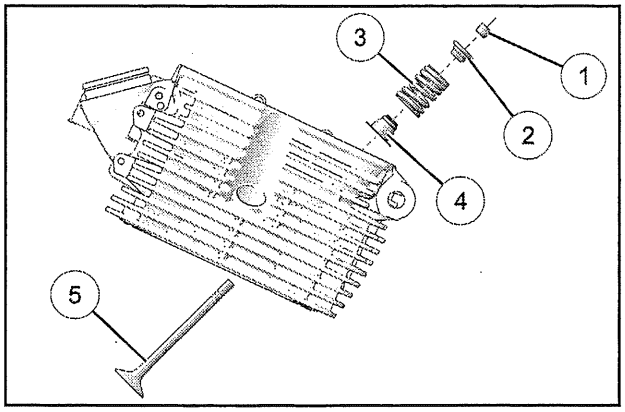

3. Remove and discard valve guide seals ④.

4. Clean carbon deposits from combustion chamber.

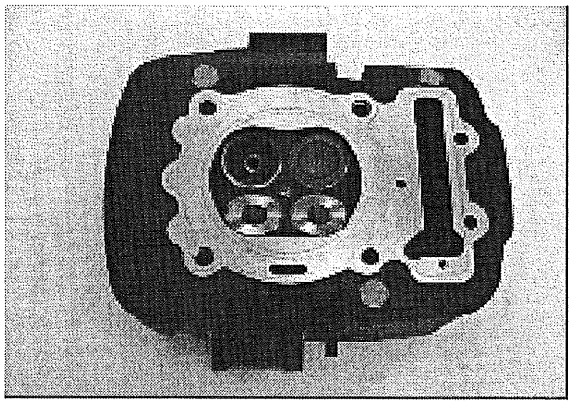

5. Clean gasket surfaces.

CYLINDER HEAD INSPECTION

1. Visually inspect cylinder head for cracks or damage. Pay close attention to the areas around spark plug and valve seats.
2. Be sure oil passage (A) in cylinder head is unobstructed.

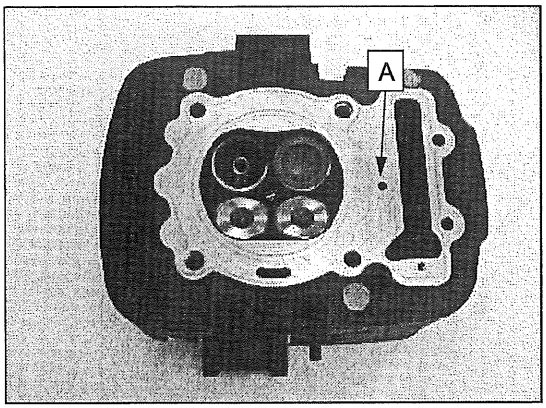

3. Inspect cylinder head for distortion with a straight edge and feeler gauge. Check in different directions and locations on the cylinder head as shown. Compare to specification on Specifications, page 7.3.

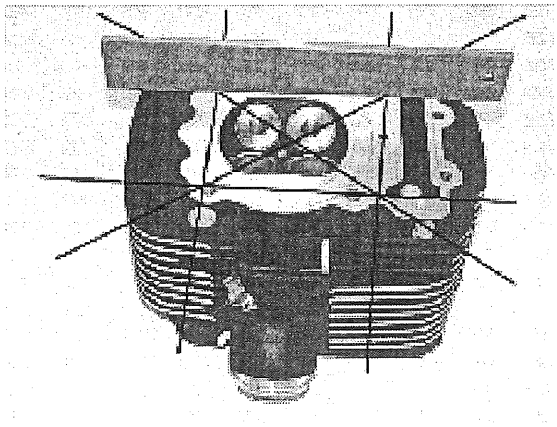

VALVE SPRING FREE LENGTH INSPECTION

- Measure free length of valve springs. Replace springs that do not meet specification on Specifications, page 7.3.

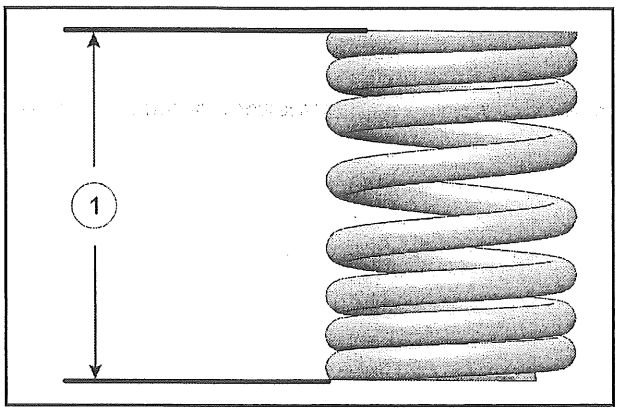

ITEM	STANDARD LENGTH
①	43.36 mm (1.708")

NOTE

Intake and exhaust springs are identical.

VALVE INSPECTION

NOTE

Valve service specifications can be found at the beginning of this chapter. See Specifications, page 7.3.

1. Place valves on V-blocks as shown and measure valve stem runout ① using a runout gauge or similar tool.
2. Inspect the valve face for damage from burning, pitting or uneven contact.
3. Place valves on V-block as shown and inspect valve head radial runout ②.

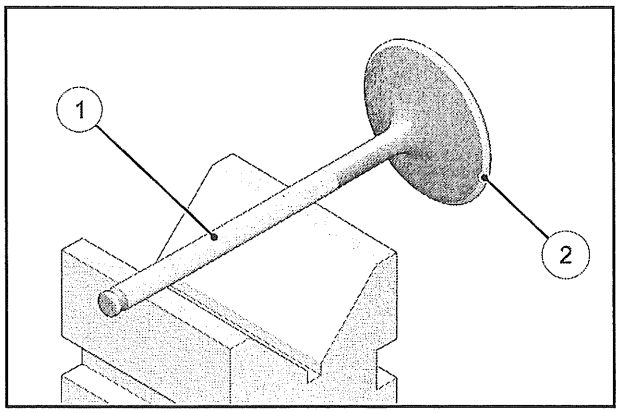

4. Insert valves into their original locations in cylinder head.

7

5. Inspect that each valve moves up and down smoothly without binding in guide.
6. Measure valve stem deflection ③ for all valves to determine if valve or valve guide requires replacement.

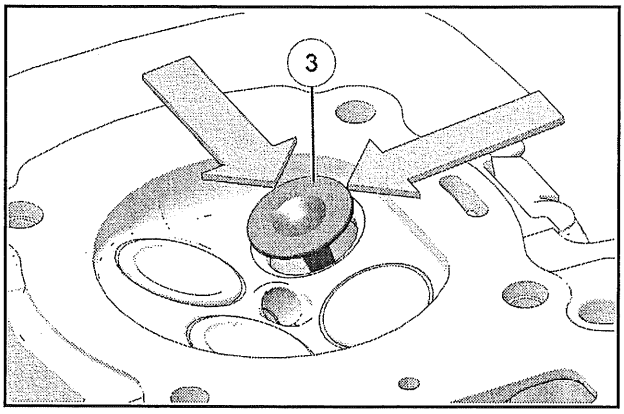

A. Raise valve 10mm (0.400") off of seat.

B. Position dial indicator as shown. Measure deflection in two directions perpendicular to each other (X & Y axis).

C. If valve deflection exceeds service limit measure valve stem diameter.

7. Replace valve and repeat step 6 if valve stem O.D. measures outside standard range. If valve stem deflection exceeds service limits with a new valve installed, valve guide must be replaced.
8. Installation of new valve guides and/or new valves requires valve seat reconditioning. This work should be performed by an experienced technician properly equipped to perform cylinder head reconditioning.

VALVE INSPECTION CHART

Valve Inspection

CONDI-TION	ILLUSTRA-TION	POSSIBLE CAUSE	CORREC-TIVE ACTION
Uneven seat width	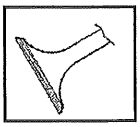	Bent valve stem, worn valve guide	Replace valve and reface seat
Damaged valve face	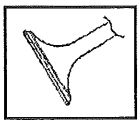	Burnt, pitted, foreign material damage	Replace valve and reface seat
Contact area too high	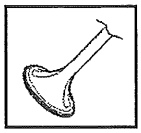	Wear, settling of valve seat	Lower with 30° stone
Contact area too low	X 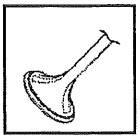	Wear, settling of valve seat	Raise with 60° stone
Contact area too wide	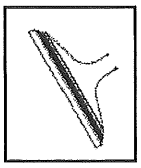	Wear, settling of valve seat	Narrow with both 30° stone and 60° stone
Contact area too narrow	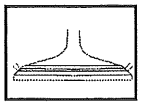		Use 45° stone
Contact area free of pitting and damage, centered in seat, proper width.	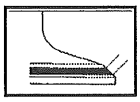	Correct	None

VALVE GUIDE REMOVAL / INSTALLATION

CAUTION

Replacement of valve guides requires an oven, special equipment and experience to do the job correctly. If you are unsure of your ability to do the repair professionally it is best to sublet the labor to a competent machinist. Valve seat reconditioning is required when valve guides are replaced.

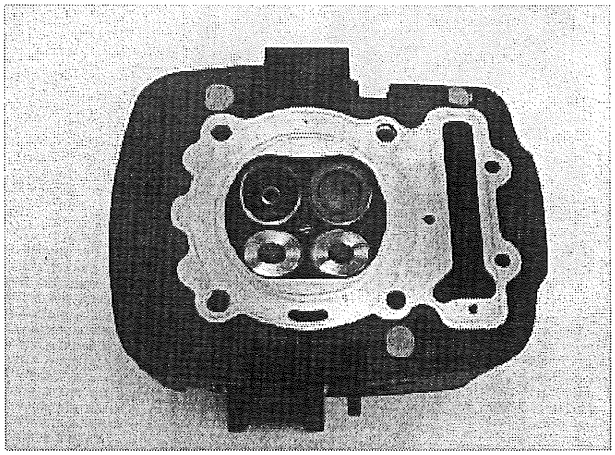

1. Support cylinder head and place valve guide remover into valve guide from the combustion chamber side.
2. Drive or press old valve guides out of cylinder head.

CAUTION

The cylinder head can be easily damaged if the procedure is done carelessly.

3. Apply 90 weight oil to outside of new valve guides.
4. Drive or press new guides from camshaft side of head. Drive or press guides in until circlip (A) seats against head surface (B).

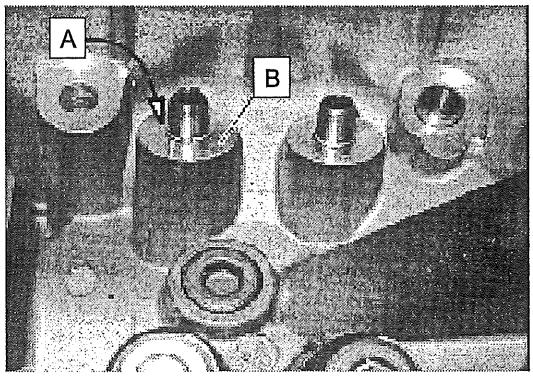

7

5. Measure valve guide height from spring seat:
   GUIDE INSTALLED HEIGHT: 12.20-12.80 mm
6. Ream new valve guides to size to obtain specified stem-to-guide clearance. Ream from combustion chamber side of head.

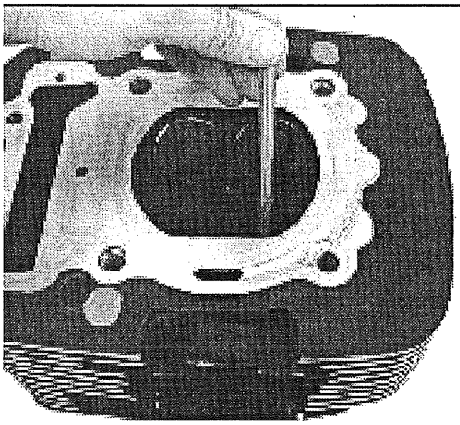

CAUTION

Do not tilt the reamer while reaming the guide. Always rotate the reamer in a clockwise direction.

7. Clean cylinder head thoroughly with clean solvent.
8. Inspect and recondition valve seats.

VALVE SEAT INSPECTION

NOTE

Valves cannot be ground. If valve face is burned or badly worn, replace the valve.

1. Remove carbon deposits from valves and seats.
2. Inspect valve face for burning, pitting or uneven contact.
3. Apply a light coating of machinist's layout fluid or paste to valve face.
4. Install valve into valve guide.
5. Tap valve several times to make a clear impression on the valve face. Do not rotate valve.
6. Remove valve and measure contact area ①. See Specifications, page 7.3.

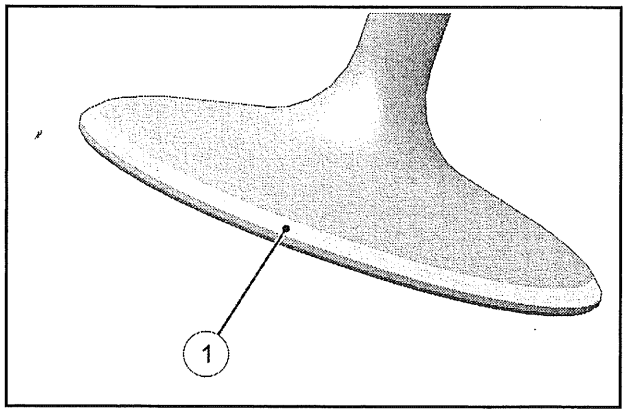

7. If valve seat is incorrect, recondition as needed.

VALVE SEAT RECONDITIONING

NOTE

Valve seat reconditioning should be performed by a technician proficient in cylinder head reconditioning techniques using grinding stones. The use of carbide cutters is not recommended. Follow recommendations of the manufacturer of the valve seat reconditioning equipment being used. Do not grind seats more than necessary to provide proper seat width and contact point on valve face.

CYLINDER HEAD ASSEMBLY

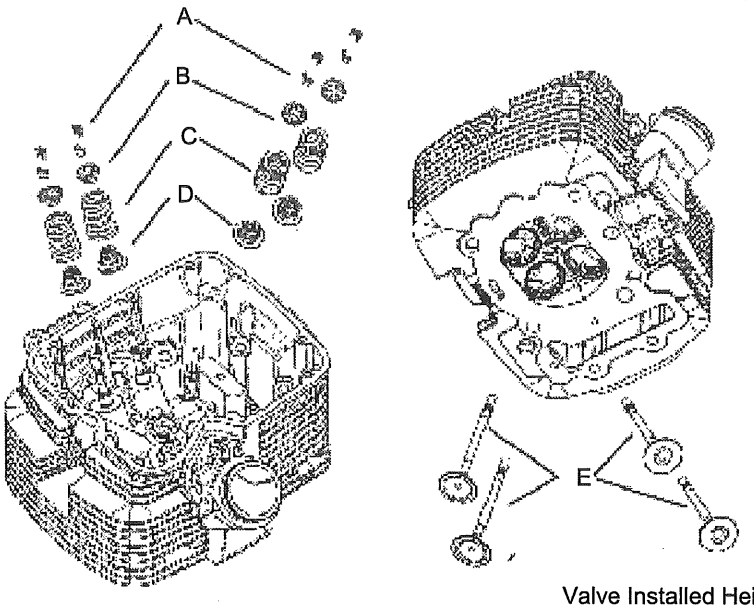

A. Keeper

B. Spring Retainer

C. Spring

D. Seal

E. Valve

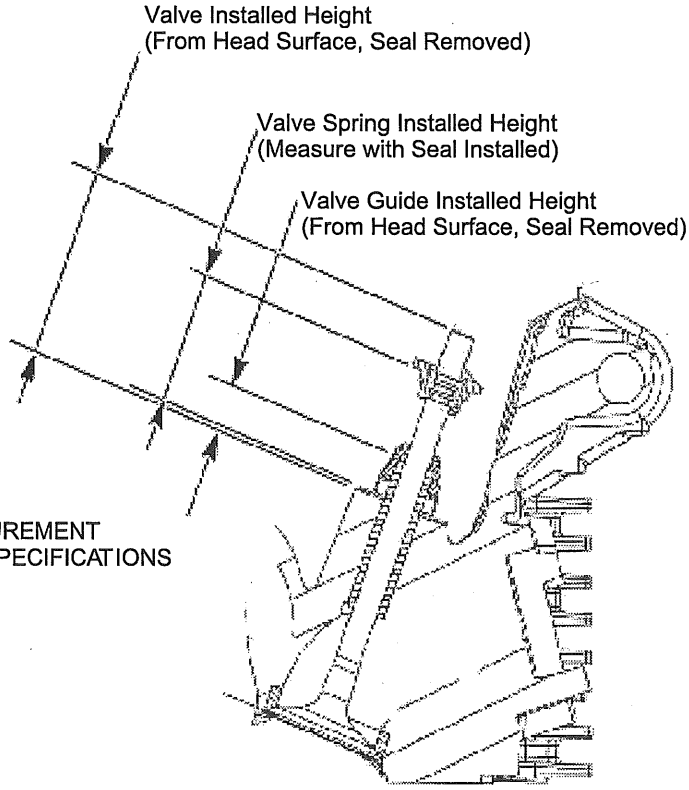

INSTALLED HEIGHT MEASUREMENT
REFER TO PAGE 7.3 FOR SPECIFICATIONS

7

CYLINDER HEAD ASSEMBLY

CAUTION
Wear eye protection during assembly.

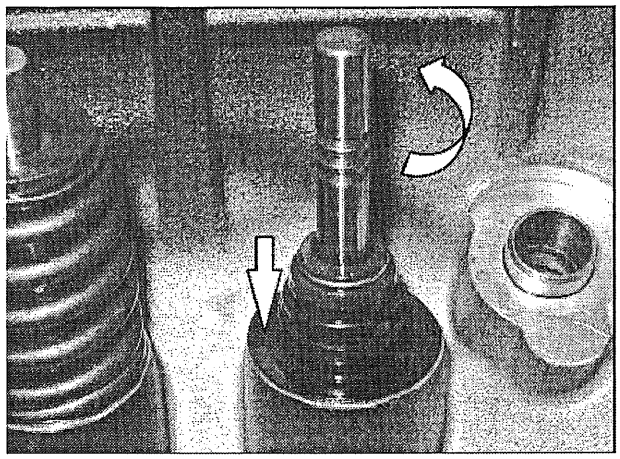

1. Lubricate valve stems with assembly lube.
   Moly assembly paste PN: 2871460
2. Install valve in head *before* installing seal. Hold valve against seat wipe off the portion that extends above the guide.
3. Apply Victory engine oil to valve guide seal and install seal on valve, rotating the seal as you install it.
4. Press seal firmly in place on top of guide. Be careful not to dislodge spring from seal.
5. Install valve spring and upper retainer.

CAUTION
Support cylinder head so valves will not be damaged. Do not compress valve springs more than necessary to install keepers.

6. Compress valve springs using a valve spring compressor and adapter.

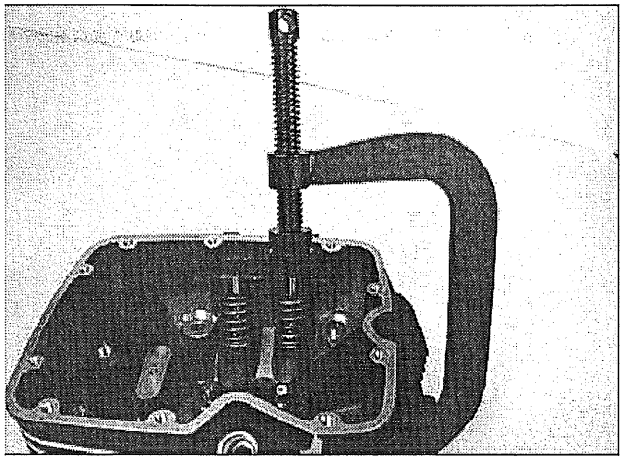

7. Apply a small amount of grease to both sides of a valve keeper.

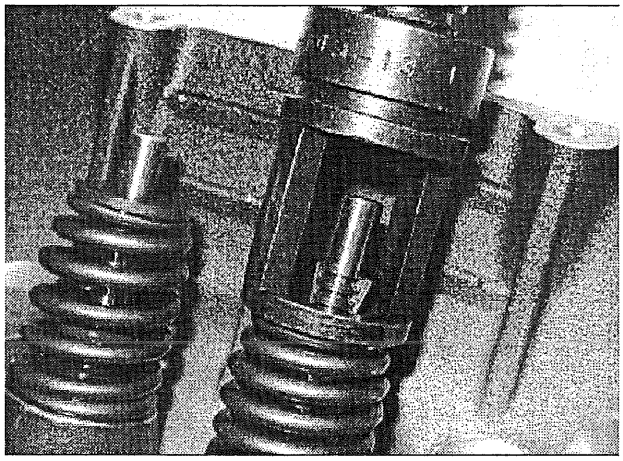

8. Insert both valve keepers in place on valve.
9. Remove spring compressor.
10. Repeat previous steps for remaining valves.
11. Be sure all keepers are fully seated in groove.

CYLINDER HEAD / CAMSHAFT INSTALLATION

NOTE

The base gasket seal is broken when the cylinder head is removed and must be replaced. Refer to Base Gasket Sealing & Cylinder Stud Torque, page 8.2 for cylinder base gasket replacement.

1. Thoroughly clean cylinder and cylinder head gasket surfaces. Both surfaces and gasket must be free of oil or grease.

NOTE

Gaskets and gasket sealing surfaces must be free of oil and grease during assembly.

2. Install dowel pins ①.

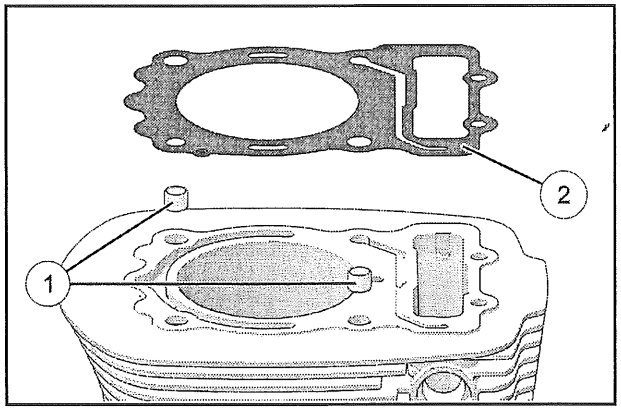

3. Install a new head gasket ②.
4. Clean gasket surface on cylinder head and set cylinder head in place on cylinder.
5. Camshaft carriers are marked "F" (FRONT) or "R" (REAR) for installation in their respective cylinder heads (C).

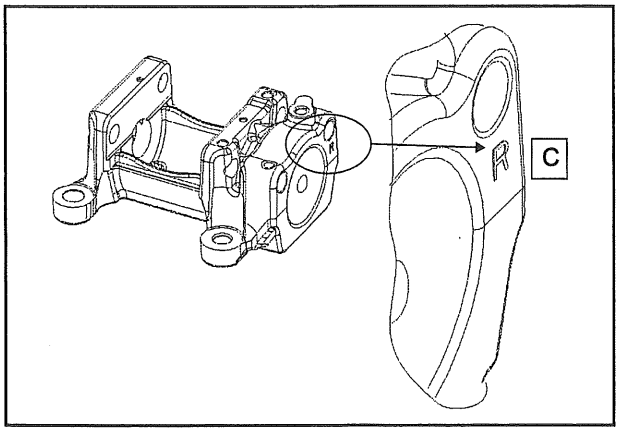

6. Apply Moly Assembly Paste (P/N 2871460) to lobes and main journals of camshaft.
7. Install camshaft marked "R" into rear cam carrier and camshaft marked "F" into front cam carrier.
8. Be sure alignment pins (D) are in place and fully seated in cylinder head.

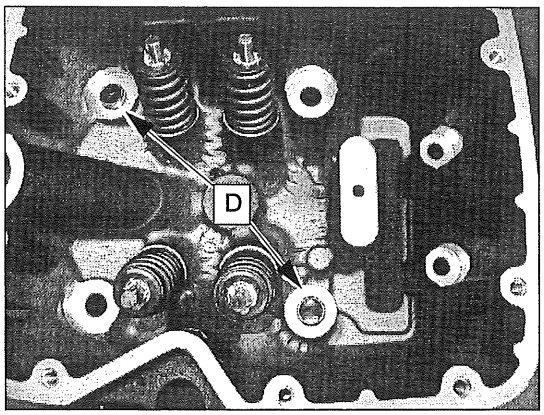

9. Turn camshaft until lobes are pointing down (away from cam follower rollers).
10. Inspect each rocker arm and position flat side of hydraulic lifter DOWN.
11. Set camshaft carrier on cylinder head.
12. Apply engine oil to 10mm studs, nut threads, nut bases and washers.
13. Install washers and nuts on cylinder studs. Tighten finger tight.

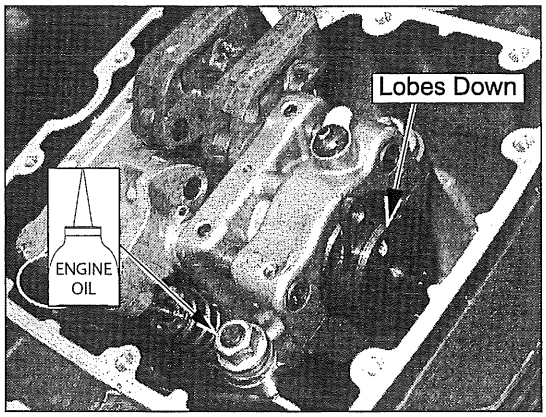

14. *Slowly and evenly* tighten cylinder head nuts following torque sequence in Fig. 2. This allows hydraulic lifters to bleed off pressure. Tighten only enough to seat cam carrier on head.

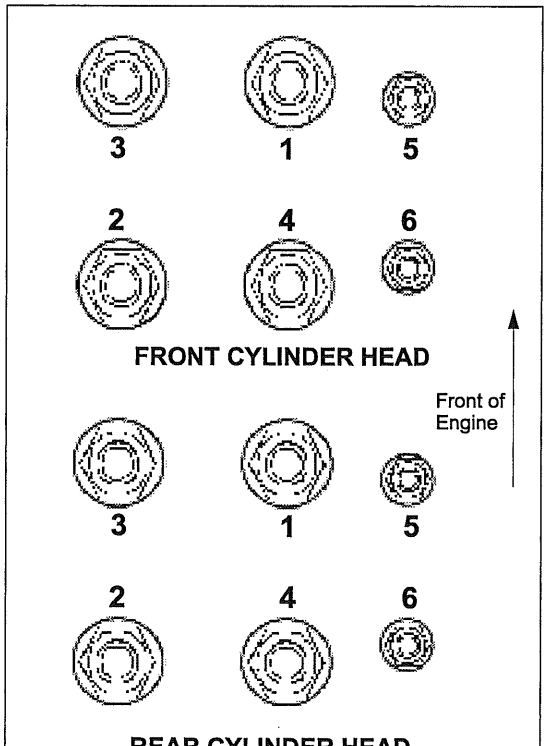

Fig. 2

15. Fully torque cylinder head following the procedure below to ensure accurate final torque:

CYLINDER HEAD TORQUE PROCEDURE (CAMSHAFT CARRIERS INSTALLED AND SEATED IN HEAD)
Step 1 Lubricate 8mm studs, washers, and nuts with engine oil and install hand tight.
Step 2 Follow torque pattern shown in Fig. 2.
Step 3 Tighten 10 mm nuts (1-4) to 22 ft-lbs (30 Nm)
Step 3 Back off completely
Step 4 Tighten 10 mm nuts (1-4) to 40 ft-lbs (54 Nm)
Step 5 Repeat the 40 ft-lbs (54 Nm) torque on 1-4.
Step 6 Torque 8mm nuts (5-6) to 18 ft-lbs (25 Nm).
Step 7 Verify that camshaft rotates freely in carrier after hydraulic lifters have had time to bleed down.
Step 8 Repeat Steps 1-7 for other cylinder head.

CAMSHAFT TIMING - REAR CYLINDER

NOTE
Rear cam chain must be installed first.

1. Rotate crankshaft clockwise to TDC (rear cylinder) using crankshaft rotation tool PV-48736.

Crank Rotation Socket PV-48736

2. Hold crankshaft at rear TDC by inserting an 8 mm (or 5/16²) locating pin through crankcase hole (A) into crankshaft.

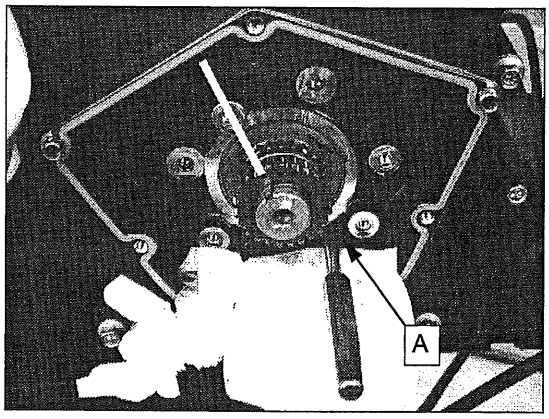

CAMSHAFT CHAIN GUIDE INSTALLATION

1. Place cam chain around rear camshaft sprocket and lower it into chain cavity along with the cam chain guide (B).
2. Seat upper pins of guide in the cylinder head recess, and install cam chain over innermost sprocket on crankshaft.
3. Install rear tensioner blade (C).
4. Torque guide and tensioner blade bolts to specification.

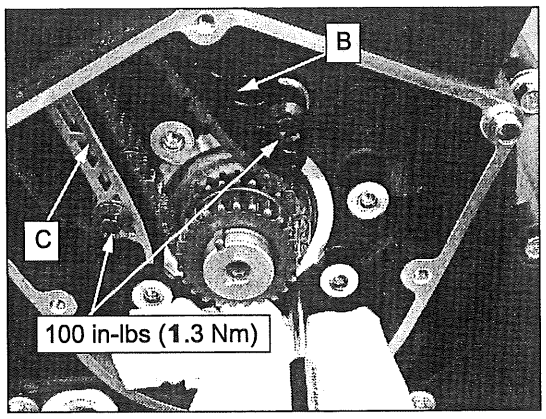

5. Be sure rear camshaft lobes are pointing down. The single mark on cam (D) must be facing UP as shown below.
6. Inspect marks before installing sprocket on camshaft. Mark on sprocket (E) must align with camshaft "R" mark (D). Outer marks (F) must be parallel with valve cover gasket surface.

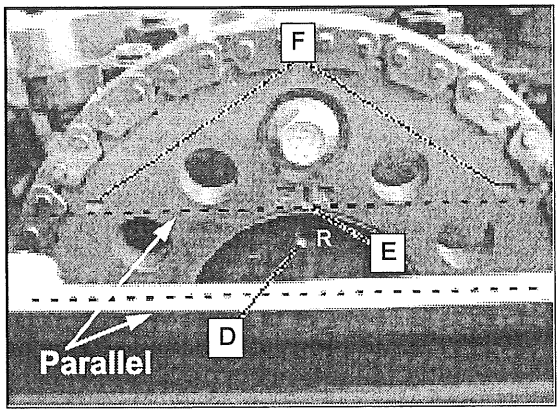

7. Align camshaft with sprocket hole and install top sprocket bolt finger tight.
8. Apply engine oil to rear cam chain tensioner. Tensioners are not interchangeable due to the length of the tensioner body. The rear tensioner is stamped with a "R".

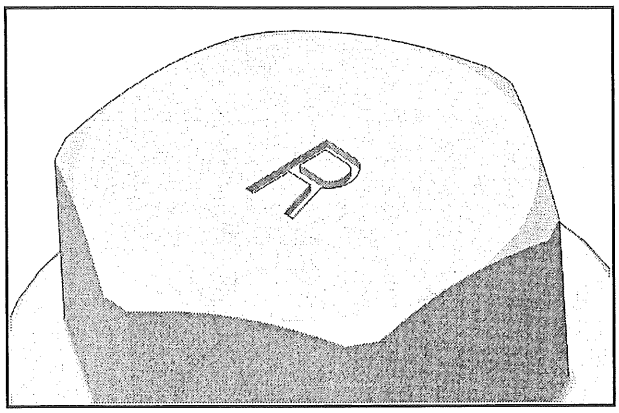

9. Install tensioner with a new sealing washer. Torque to specification.

TORQUE
Chain Tensioner: **55 ft-lb (75 Nm)**

10. Torque top sprocket bolt to specification.

TORQUE
Top Sprocket Bolt: **10 ft-lb (14 Nm)**

11. Check carefully to be sure rear cylinder camshaft timing is correct before proceeding:

- Crankshaft secured by pin and locked in the rear cylinder TDC position.
- Rear camshaft lobes facing down ("R" mark on cam aligned with "F/R" mark on sprocket).
- Rear tensioner (stamped "R") is installed and tight.
- Outer marks on camshaft sprocket are parallel to valve cover gasket surface.

12. Remove locating pin from crankshaft and proceed to Step 13.

CAMSHAFT TIMING - FRONT CYLINDER

NOTE

Rear camshaft must be properly timed as shown in Step 6 on Camshaft Chain Guide Installation, page 7.23 *before* you begin the front cylinder camshaft timing procedure.

1. Rotate crankshaft *clockwise 410°* to TDC on the front cylinder (exactly one full turn, plus an additional 50°).

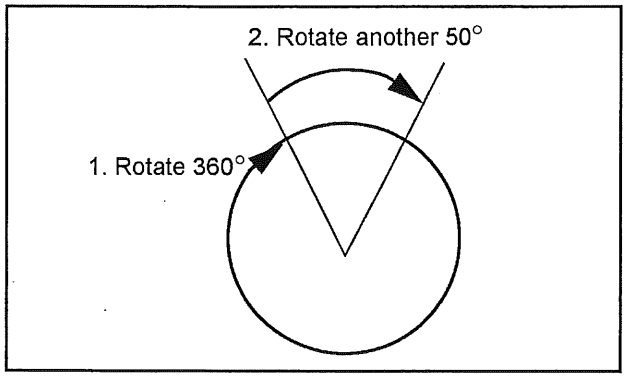

2. Rear camshaft double marks are now at the top. Install cam sprocket finger tight.

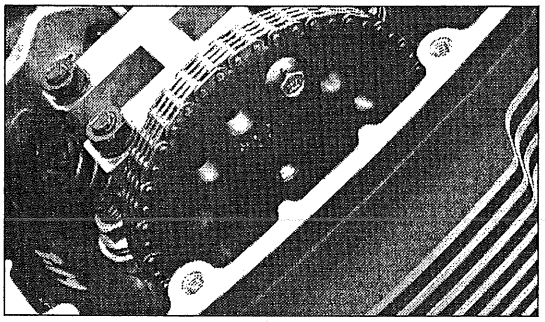

3. Insert an 8 mm (5/16²) pin through crankcase hole to hold the crankshaft in position at front cylinder TDC. Timing sprocket key (A) will be aligned with pin and front cylinder centerline.

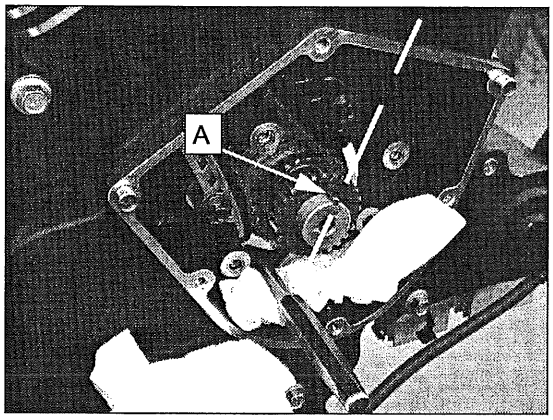

4. Install cam chain guide with front cylinder cam chain and sprocket. Insert pins (B) on upper end of guide into recess in cylinder head.

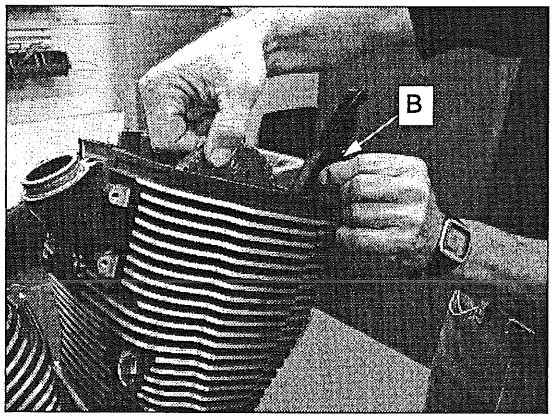

5. Install front cam chain over crankshaft sprocket.

6. Install front tensioner blade (C).

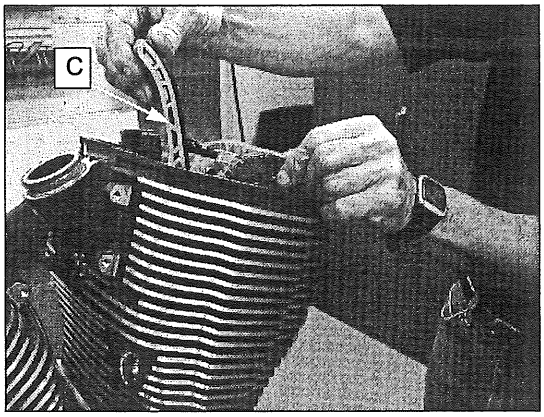

7. Torque guide and tensioner blade bolts to specification.

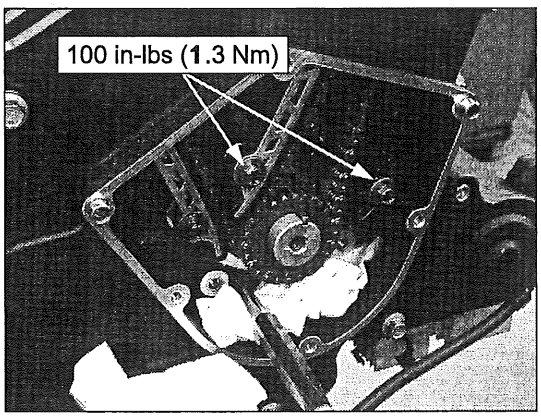

8. After pin is installed, torque the rear cam sprocket bolt (installed in Step 14) to specification.

TORQUE
Rear Cam Sprocket Bolt: **10 ft-lb (14 Nm)**

9. Rotate front camshaft slightly so lobes are pointing DOWN.

10. Install sprocket on camshaft with two lines on sprocket (D) parallel to valve cover gasket surface (E).

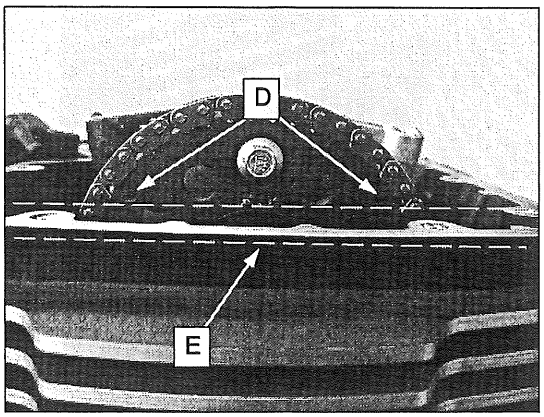

11. **Install top camshaft sprocket bolt finger tight. Do not torque the bolt until front tensioner is installed.**

12. Apply engine oil to front cam chain tensioner and damper. Push damper (F) squarely into tensioner bore in cylinder, and push it past the first 4 or 5 threads.

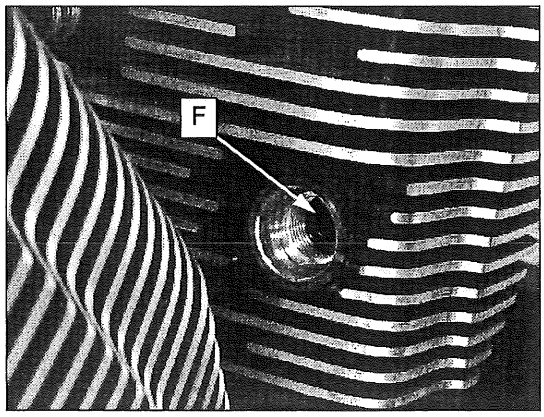

13. Install tensioner with a new sealing washer. Torque to specification.

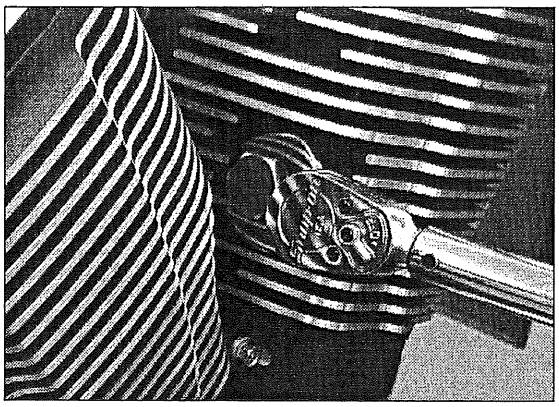

TORQUE
Cam Chain Tensioner: **55 ft-lb (75 Nm)**

14. Torque sprocket bolt to specification.

TORQUE
Sprocket Bolt: **10 ft-lb (14 Nm)**

15. Verify camshaft timing by comparing to Ill. 1 on Camshaft Timing Quick Reference, page 7.7.
16. Remove TDC locating pin from crankcase and rotate engine clockwise until the remaining front camshaft sprocket bolt hole is accessible.
17. Install sprocket bolt. Torque to specification.

TORQUE
Sprocket Bolt: **10 ft-lb (14 Nm)**

18. Fill cam carrier area of both front and rear cylinders with Victory engine oil.

NOTE
Be sure all camshaft sprocket bolts have been installed and properly tightened.

19. Rotate crankshaft clockwise approximately three complete revolutions and stop on front cylinder TDC on the compression stroke.
20. Again compare camshaft timing to Ill. 1 onCamshaft Timing Quick Reference, page 7.7 to verify the timing is correct.
21. Install valve covers (Valve Cover Installation, page 7.8).
22. Install bottom cam chain guide. Torque screws ⑦ to specification.

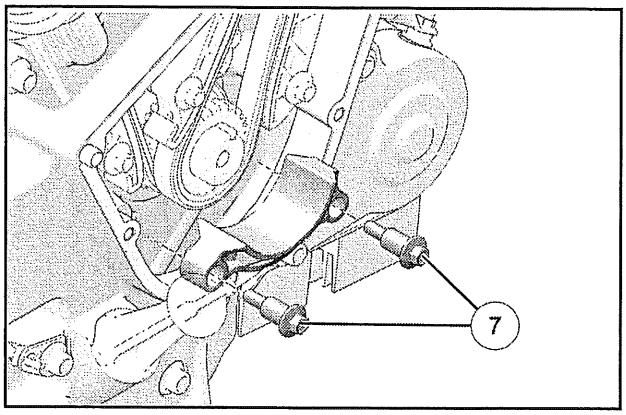

TORQUE
Bottom Cam Chain Guide: **100 in-lb (11 Nm)**

23. Clean threads of crankshaft and retaining bolt with Loctite® Primer N.
24. Apply 2 drops of Loctite® 262 (red) to bolt threads (not required if using a new bolt which has a pre-applied locking agent).
25. Install ignition timing wheel and torque bolt ⑧ to specification. Allow adequate cure time for Loctite® 262 as directed on container.

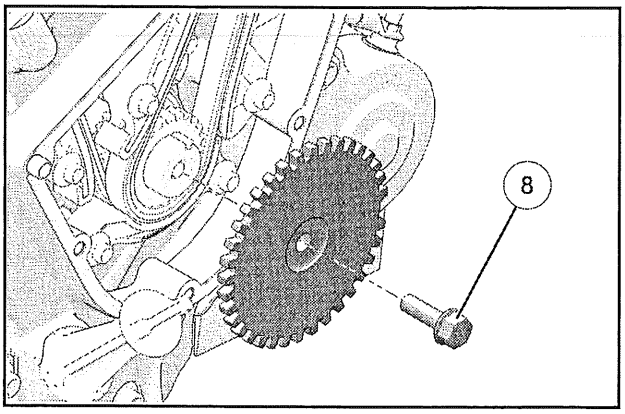

TORQUE
Timing Wheel Bolt: **17 ft-lb (23 Nm)**

26. Install cam drive cover.

TROUBLESHOOTING CYLINDER HEAD AND VALVE TRAIN

Cylinder head, valve train and piston/cylinder problems are usually detected by an engine compression test. Other problems associated with this area of the engine are external fluid leaks, excessive use of oil or abnormal noises. Troubleshooting involves the use of:

- Leak down (cylinder leakage test) or a compression gauge
- Visual inspection for the source and cause of a fluid leak
- Listening to the engine with a stethoscope to determine source of abnormal noise

The troubleshooting table below lists problems and possible causes, parts affected, and repair suggestions. Thoroughly investigate the problem and possible solution before disassembling the engine to replace suspect parts.

PROBLEM	POSSIBLE CAUSE	PART(S) AFFECTED	REPAIR RECOMMENDED
Hard Starting Won't Start Excessive Lifter Noise	Low Compression	Lifter(s) locked	Replace lifter(s)
		Collapsed Hydraulic Lifter(s). Lifter Extremely Noisy.	Bleed Lifter Noise will typically stop after 10-15 minutes of high idle operation. If lifter will not bleed, replace lifter.
		Worn Valve Guide(s)	Replace Valve Guide(s).
		Poor Seating of Valve(s)	Repair or Replace
		Broken Valve Springs	Replace
		Spark Plug Not Seated	Torque to Specifications
		Incorrect Valve Timing	Repair
		Valve Stuck Open	Repair
		Cylinder Head Gasket Leak	Repair
		Slow Starter Motor	See Electrical Section
		Worn Rings, Piston, or Cylinder	See Cylinder/Piston Section
		Ignition Problem	See Ignition Section
		Fuel Problem	See F.I. Section
Electric Starter Straining to Turn Engine Over	High Compression	Excessive carbon build-up in combustion chamber.	Use "Carbon Clean" fuel system additive or disassemble engine to de-carbon combustion chamber.
Abnormal Pre-ignition	Excessive Starter Load	Internal Engine / Drive Components Seized or Binding	Determine Cause of Seizure or Binding
Poor Idle Quality	Low Compression	Collapsed Hydraulic Lifter(s). Lifter Extremely Noisy.	Air trapped in lifter. Noise will stop after 10-15 minutes of high idle operation. If air will not bleed, replace lifter.
		Poor Seating of Valve(s)	Repair or Replace
	Air leak	Mounting Surfaces, Hoses	Repair Air Leak
	IAC System Fault	Inspect IAC System Hoses	Repair Air Leak or restriction in IAC System
	Fuel Mixture Rich	F.I. System	Refer to Fuel System Chapter
	Fuel Mixture Lean	F.I. System / Inlet Tract	Refer to Fuel System Chapter
	Ignition Misfire	Ignition System	Refer to Electrical Chapter
	Excessive Oil in Combustion Chamber	Valve guides	Replace
		Worn Rings, Cylinder, or Piston	Refer to Cylinder / Piston Chapter
		Engine Oil Overfilled	Correct
	Valves Not Opening Fully	Worn Cam Shaft or Rocker Arms	Replace
Engine Noise	Valve Train Area	Collapsed Hydraulic Lifter(s). Lifter Extremely Noisy.	Air trapped in lifter. Noise will stop after 10-15 minutes of high idle operation. If lifter will not bleed, replace lifter.

PROBLEM	POSSIBLE CAUSE	PART(S) AFFECTED	REPAIR RECOMMENDED
		Lifter(s) Locked	Replace Lifter(s)
		Broken or Weak Valve Springs	Replace
		Worn Camshaft or Rocker Arm	Replace
		Rocker Arm Roller Bearing Damage	Replace
		Cam Journal Worn or Damaged	Replace
	Piston/Cylinder Area	Worn Pistons and/or Cylinders	Replace
		Excessive Carbon Build-up in Combustion Chamber	Clean
		Worn Piston Pin, Piston Pin Bore and/or Small End of Connecting Rod	Replace
		Worn Piston Rings or Piston Ring Lands.	Replace
	General (May apply to all areas below)	Exhaust leak	Remove exhaust and seal
	Timing Chain Area	Stretched Chain	Replace
		Worn Sprockets	Replace
		Tensioner Not Working	Replace
	Primary Cover Area	Clutch	Refer to Clutch, Primary / Shift Chapter
		Flywheel	Refer to Clutch, Primary / Shift Chapter
		Starter System	Refer to Electrical Chapter
		Torque Compensator	Refer to Clutch, Primary / Shift Chapter
	Bottom End Area	Main Bearings	Refer to Transmission / Crankshaft Chapter
		Rod Bearings	Refer to Transmission / Crankshaft Chapter
		Loose Side Clearance	Refer to Transmission / Crankshaft Chapter
	Transmission Area	Bearings	Refer to Transmission / Crankshaft Chapter
		Misplaced Circlips	Refer to Transmission / Crankshaft Chapter
		Incorrect Side Clearance	Refer to Transmission / Crankshaft Chapter
Poor high speed running	Air Intake Problem		Refer to Fuel System Chapter
	F.I. System Problem		Refer to Fuel System Chapter
	Ignition Problem		Refer to Electrical Chapter
	Valve Float	Weak Valve Springs	Replace
	Insufficient Valve Travel	Worn Camshaft/Rocker Arms	Replace
	Valves Opening & Closing at Wrong Time	Incorrect Valve Timing	Correct
Lack of power in all RPM ranges	Low Compression	Worn Piston, Rings, Cylinder	Replace
	Low Compression	Poor Valve Seating	Repair/Replace
	Valves Opening & Closing at Wrong Time	Valve Timing Incorrect	Correct
	Incorrect Valve Clearance	Hydraulic Lifter Bleeding Down	Replace

PROBLEM	POSSIBLE CAUSE	PART(S) AFFECTED	REPAIR RECOMMENDED
	Lifter(s) Locked	Debris in Lifter	Replace lifter(s)
	Collapsed Hydraulic Lifter (s).Lifter Extremely Noisy.	Air Trapped in Lifter. Noise will stop after 10-15 minutes of high idle operation. If lifter will not bleed, replace lifter.	Replace Lifter
	Valve Float	Weak Valve Springs	Replace
	Insufficient Valve Travel	Worn Camshaft/Rocker Arms	Replace
	Ignition Problem		Refer to Fuel System Chapter
	F.I. Problem		Refer to Fuel System Chapter
	Air Intake Problem		Refer to Fuel System Chapter
	Oiling Problem	Oil Overfilled	Correct
	Vacuum Leak	Mounting Surfaces, Hoses	Correct
Using/Burning Oil	Oil in Combustion Chamber	Oil Overfilled	Correct
	Oil Past Rings	Worn or Damaged Piston, Rings, Cylinder	Replace
	Oil Past Valve Guides	Worn Valve Guides	Replace
		Worn Valve Guide Seals	Replace

NOTES

CHAPTER 8
CYLINDER / PISTON

CYLINDER AND PISTON 8.2
GENERAL 8.2
SPECIAL TOOLS 8.2
BASE GASKET SEALING & CYLINDER STUD TORQUE 8.2
PISTON / CYLINDER SPECIFICATIONS 8.4
CYLINDER REMOVAL 8.5
CYLINDER INSPECTION 8.5
CYLINDER BORE MEASUREMENT 8.5
PISTON TO CYLINDER CLEARANCE WORKSHEET 8.6
CYLINDER WARP MEASUREMENT 8.7
PISTON & RING REMOVAL 8.7
PISTON & RING INSPECTION 8.8
PISTON PIN / PIN BORE INSPECTION 8.9
CYLINDER STUD REPLACEMENT 8.9
PISTON RING INSTALLATION 8.9
PISTON INSTALLATION 8.10
CYLINDER INSTALLATION 8.11
TROUBLESHOOTING CYLINDER & PISTON 8.12

CYLINDER AND PISTON

GENERAL

NOTE

Clean the machine thoroughly before removing engine from frame.

- This section covers service of the cylinder, piston and rings. The engine must be removed from the frame to perform the procedures in this section. Refer to Engine Removal / Installation Chapter.
- Mark and store all mated parts for assembly. Assemble engine by putting used parts that pass inspection back in the same location.
- Machined and mated surfaces are very delicate. Handle and store all parts in such a way that the mating surfaces will not be damaged.
- Many parts require assembly lubrication. Follow the assembly lubrication procedures carefully.

Moly assembly paste PN: 2871460

- There are many precision measuring steps in this section. If you are not sure of your capabilities in these areas, have a competent machinist perform the precision part inspection operations.
- Cleanliness of parts is critical to engine life and proper parts inspection. Use clean solvent and hot, soapy water to clean parts. Dry with compressed air before inspection and engine assembly. Coat parts with fresh lubricant to prevent oxidation after cleaning.

SPECIAL TOOLS

TOOL	PART NUMBER
Piston Ring Compressor Pliers	PV-43570-1
Piston Ring Compressor Band	PV-43570-2
Cylinder Bore Gauge	PV-3017
Straight-edge	Refer to Chapter 1 or Commercially Available
Feeler Gauge	
Precision Measuring Instruments	
Protective Sleeves for Pistons / Studs	Commercially Available

BASE GASKET SEALING & CYLINDER STUD TORQUE

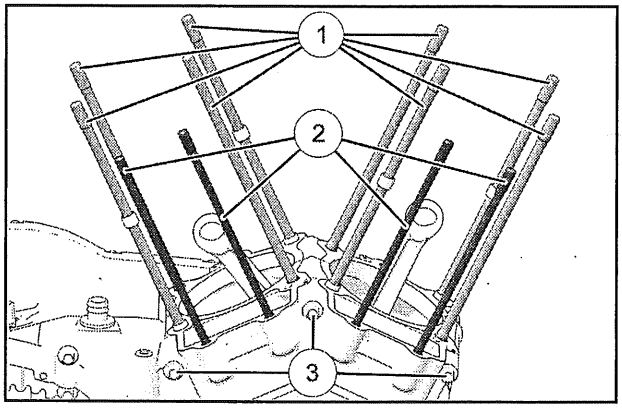

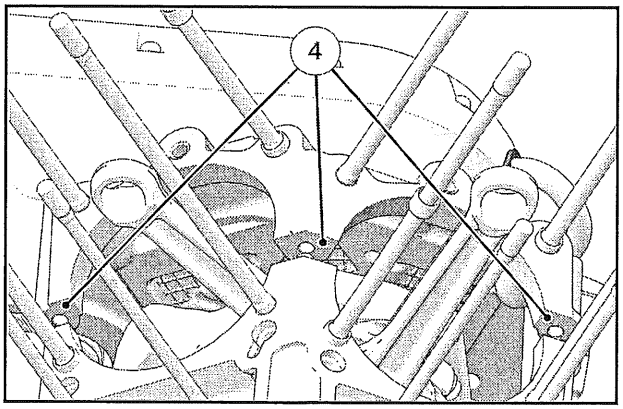

ITEM	NOTES	TORQUE
①	M11 x 1.50 mm thread to case	**25 ft-lbs (34 Nm)**
②	M8 x 1.25 mm Studs	**15 ft-lbs (20 Nm)**

ITEM	NOTES	TORQUE
③	M9 x 1.25 mm to case	**22 ft-lbs (30 Nm)** See Crankcase Bolt Length And Torque Pattern, page 10.8 for proper torque sequence.
④	Apply sealant to case parting line before installing base gasket	—

PISTON / CYLINDER SPECIFICATIONS

ITEM		STANDARD	SERVICE LIMIT
Cylinder	I.D.	100.987 - 101.013 mm (3.9759" - 3.9769")	Check taper and out of round
	Out of Round	Measure 66mm up from base gasket surface	0.05 mm (0.002")
	Taper		0.05 mm (0.002")
	Gasket Surface Warp	→	0.1 mm max (0.0039")
Piston	Piston Mark Direction	Piston orientation is determined by arrow on piston crown. Position BOTH pistons so arrows point to front of engine.	
	Piston O.D. (Nominal) (measured 10mm up from bottom of skirt, 90° to pin)	100.946 - 100.964 mm (3.9742 - 3.9750")	Replace if piston-to-cylinder clearance is excessive with good cylinder
	Piston Pin Hole I.D.	22.006 - 22.012 mm (0.8664 - 0.8666")	22.047 mm (0.8680")
	Piston Pin O.D.	21.995 - 22.000 mm (0.8659 - 0.8661")	21.96 mm (0.864")
	Piston to Cylinder	0.023 - 0.067 mm (0.0009 - 0.0026")	0.15 mm (0.006")
	Piston to Piston Pin	0.006 – 0.017 mm (0.0002 - 0.0007")	0.035 mm (0.0014")
Piston Ring Clearances (Installed)	Ring End Gap – Top	0.15 – 0.40 mm (0.006 – 0.016")	0.80 mm (0.031")
	Ring End Gap – 2nd	0.33 – 0.53 mm (0.013 – 0.021")	1.11 mm (0.043")
	Ring End Gap – 3rd	0.15 – 0.35 mm (0.006 – 0.014")	0.80 mm (0.031")
Piston Ring Marks		—	"CTOP" mark must face UP on all rings. Piston Ring Installation, page 8.9
Piston Ring to Ring Land	Top Ring (1.2mm ring thickness)	0.02 – 0.060 mm (0.008 – 0.0024")	0.11 mm (0.0043")
	2nd Ring (1.2mm ring thickness)	0.02 – 0.060 mm (0.008 – 0.0024")	0.11 mm (0.0043")
	Oil Control Ring	0.03 – 0.17 mm (0.001 – 0.0067")	0.26 mm (0.010")

CYLINDER REMOVAL

1. Remove engine from frame (see Removal Procedure, page 6.4).
2. Remove cylinder head (s) (see Cylinder Head Removal, page 7.13).
3. Remove cylinder(s). Support pistons while removing cylinders so they do not fall into the cylinder studs. Use a section of hose (A) to protect the piston rings from contacting the studs.
4. Clean gasket surfaces of cylinders thoroughly.

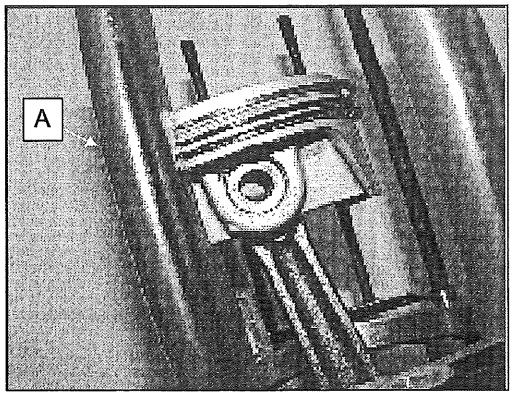

CAUTION
Careless handling of cylinder, pistons or rings may cause irreparable damage. Do not damage gasket surfaces during cleaning.

CYLINDER INSPECTION

1. Visually inspect cylinder bores for scratches and wear.
2. Inspect gasket surfaces for scratches or other damage that may cause an oil leak.

CYLINDER BORE MEASUREMENT

1. Measure each cylinder bore in 6 places to determine:
   - Cylinder Bore Inside Diameter
   - Cylinder Taper and Out of Round

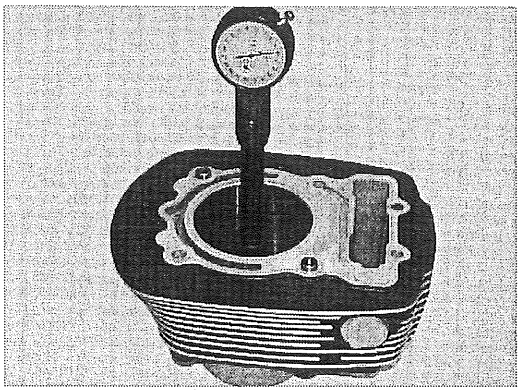

2. Use maximum measurement to determine wear.
3. Use the worksheet provided on Piston to Cylinder Clearance Worksheet, page 8.6 to record measurements and calculate the clearance.

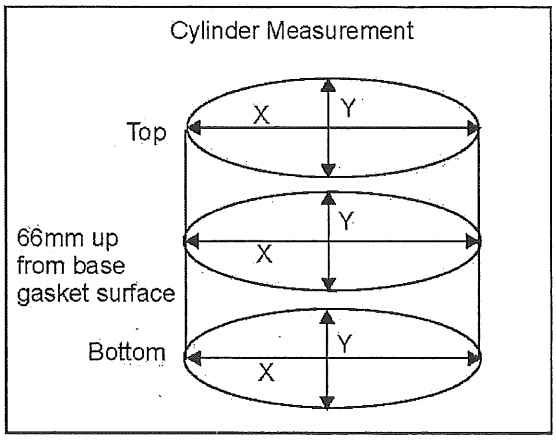

8

PISTON TO CYLINDER CLEARANCE WORKSHEET

FRONT CYLINDER	RECORDED MEASURE-MENT	SPECIFICATION
Top "X"		Taper Service Limit: .05mm (.002")
Middle "X"		
Bottom "X"		
Top "Y"		
Middle "Y"		
Bottom "Y"		
Difference between largest "Y" measurement and smallest "Y" measurement	Taper for "Y" axis:	
Difference between largest "X" measurement and smallest "X" measurement	Taper for "X" axis:	
Largest difference between any "X" axis measurement and "Y" axis measurement	Cylinder Out-of-Round:	Out-of-Round Service Limit: 0.05mm (0.002")
Piston Skirt Measurement		
Difference between largest "X" axis measurement and piston measurement	Piston-to-Cylinder Clearance*	Piston-to-Cylinder Clearance Service Limit: .15 mm (.006")

REAR CYLINDER	RECORDED MEASURE-MENT	SPECIFICATION
Top "X"		Taper Service Limit: .05mm (.002")
Middle "X"		
Bottom "X"		
Top "Y"		
Middle "Y"		
Bottom "Y"		

REAR CYLINDER	RECORDED MEASURE-MENT	SPECIFICATION
Difference between largest "Y" measurement and smallest "Y" measurement	Taper for "Y" axis:	
Difference between largest "X" measurement and smallest "X" measurement	Taper for "X" axis:	
Largest difference between any "X" axis measurement and "Y" axis measurement	Cylinder Out-of-Round:	Out-of-Round Service Limit: 0.05mm (0.002")
Piston Skirt Measurement (see Piston Cylinder Specifications).		
Difference between largest "X" axis measurement and piston measurement	Piston-to-Cylinder Clearance*	Piston-to-Cylinder Clearance Service Limit: .15 mm (.006")

Compare recorded measurement to specifications. If measured value exceeds service limit replace the appropriate part.

NOTE

The cylinders are Ni-SiC plated and cannot be reconditioned by boring or honing. If excessive surface damage, taper or out-of-round exists, the cylinder must be replaced.

- If the piston-to-cylinder clearance exceeds the service limit, *measure a new piston and re-calculate the clearance.* If the piston-to-cylinder clearance exceeds the service limits with a new piston, the cylinder must be replaced.

CYLINDER WARP MEASUREMENT

1. Inspect cylinder for warpage at cylinder head surface and base gasket surface.

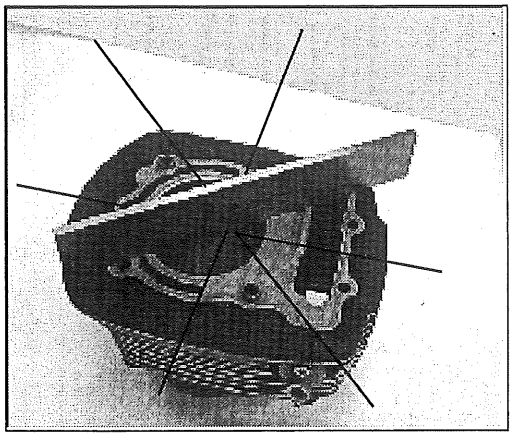

2. Place a straight edge diagonally across cylinder mating surfaces in several positions. Attempt to slide a .05mm (.002") feeler gauge under the straight edge in each position.
3. Replace cylinder if warped beyond the service limit.

PISTON & RING REMOVAL

1. Cover crankcase with a clean shop towel to prevent piston clip from falling into the crankcase.
2. Remove the left piston pin circlip.
3. Push piston pin out to left side of engine and remove the piston.

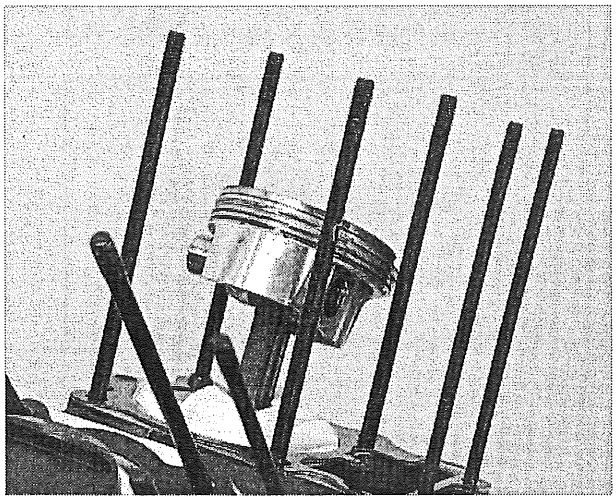

4. Rotate rings in piston groves. Rings should rotate freely in grooves.
5. Clean carbon deposits from piston.
6. Spread rings only wide enough to remove them from piston. Spreading rings too wide will damage them.
7. Clean piston ring grooves. Break or cut a piston ring in half. File or grind one edge square and remove all burrs. Use this piston ring to carefully clean piston ring grooves.

NOTE

A soft wire brush may be used to clean the top of the piston. Do not use a wire brush to clean the sides of the piston or the piston ring groves.

8

PISTON & RING INSPECTION

1. Visually inspect piston for cracks, excessive wear, scoring, etc.

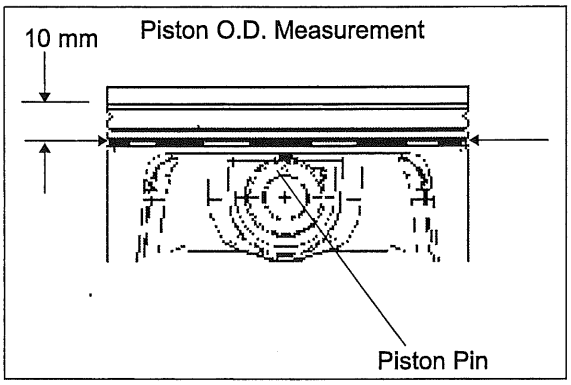

2. Measure piston skirt O.D. (90° to pin and 10 mm from bottom of piston skirt). Compare to specifications on Piston / Cylinder Specifications, page 8.4. Replace piston if worn beyond the service limit.
3. Calculate Piston to Cylinder Clearance. Subtract piston O. D. from cylinder bore I. D. and compare to specification listed on Piston / Cylinder Specifications, page 8.4.

Piston to Cylinder Clearance Calculation

Cylinder I.D.
\- Piston O.D.

= Piston to Cylinder Clearance

4. Replace parts that do not meet specification.

NOTE

If piston-to-cylinder clearance exceeds service limit, *measure a new piston and re-calculate clearance*. If piston-to-cylinder clearance exceeds service limits with a new piston, cylinder must be replaced.

5. Use a piston to push each ring squarely into cylinder bore from bottom (push rings 25-50 mm into cylinder).

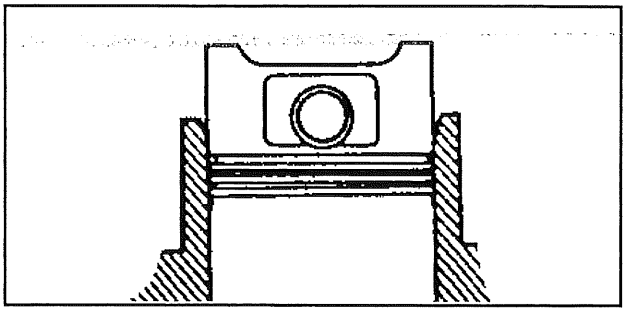

6. Measure installed ring end gap with a feeler gauge and compare to specification listed on Piston / Cylinder Specifications, page 8.4. If either ring exceeds the service limit, replace ring set.

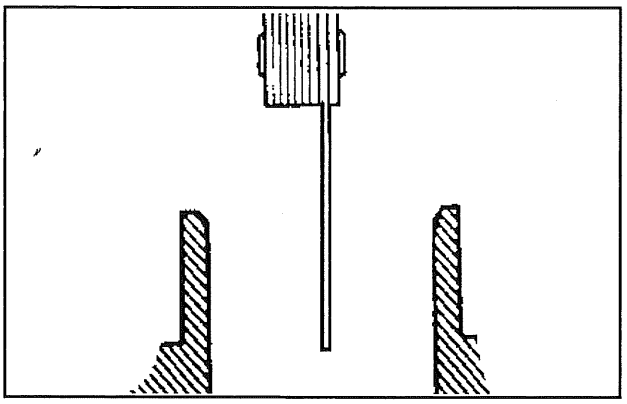

7. Install rings onto a clean piston. Push rings in until they are flush with piston. Using a feeler gauge (A), measure side clearances for the 1st & 2nd rings. If any of clearances exceed limit, replace piston and piston rings.

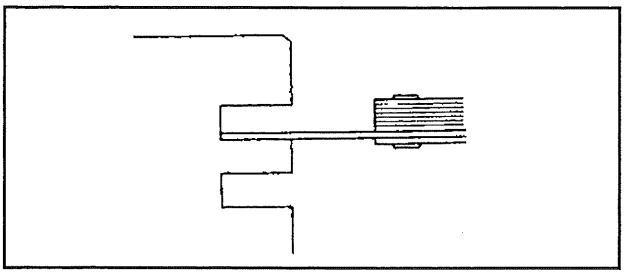

PISTON PIN / PIN BORE INSPECTION

1. Measure piston pin hole I.D. (as shown) as close to the circlip groove as possible with a telescoping gauge. Record the smallest measurement.

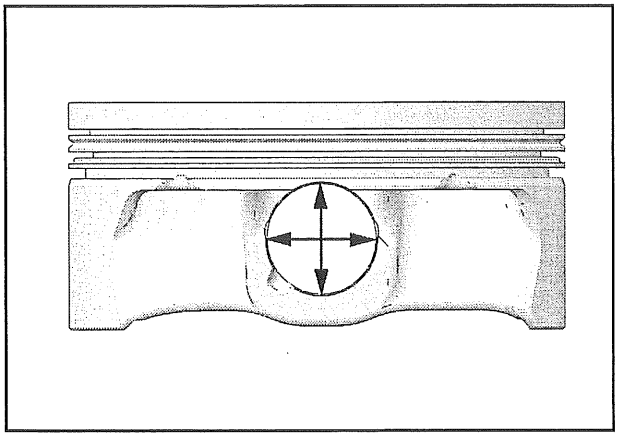

2. Measure piston pin O.D. at three locations. Record largest measurement.

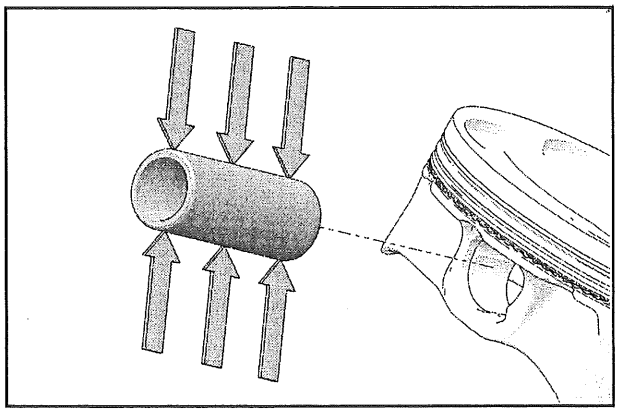

3. Calculate piston pin-to-piston clearance. Subtract pin O.D. from pin hole I.D.
4. Measure connecting rod small end I. D. at two locations.

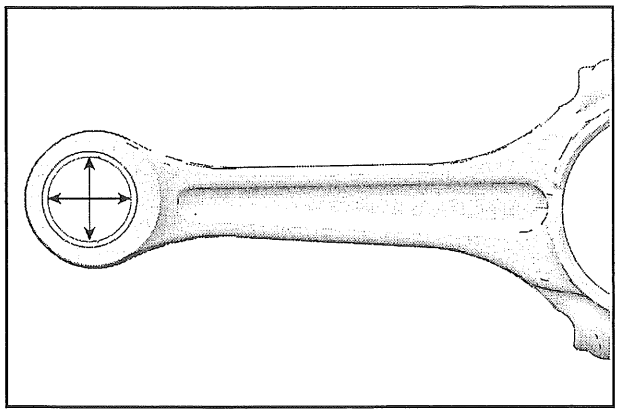

5. Calculate connecting rod-to-piston pin clearance by subtracting pin O.D from rod hole I.D.
6. Compare measurements to specifications and replace any worn parts. See Piston / Cylinder Specifications, page 8.4.

CYLINDER STUD REPLACEMENT

1. Use a stud remover to remove 10 mm studs ① and 8 mm studs ②.

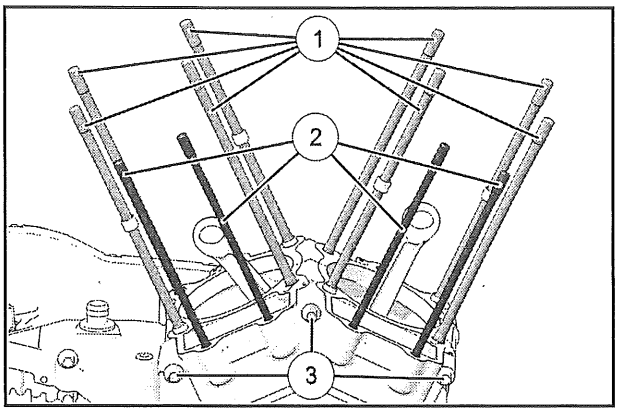

2. Clean threads in cases thoroughly.
3. Apply engine oil to stud threads.
4. Install studs and torque them to specification.

TORQUE
10 mm Studs **25 ft-lbs (34 Nm)**

TORQUE
8 mm Studs **15 ft-lbs (20 Nm)**

PISTON RING INSTALLATION

CAUTION
The rings may be damaged if they are over expanded during installation.

1. Carefully install oil control ring assembly (bottom ring) with "CTOP" mark facing up. The oil control ring consists of a backing spring and one rail component.

8

2. Install first and second rings with "CTOP" mark facing UP.

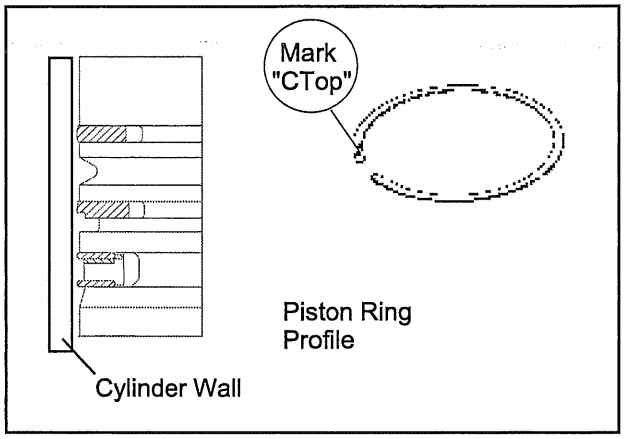

3. Make sure that rings rotate freely in grooves.
4. Locate ring end gaps as shown below in relation to arrow on piston crown.

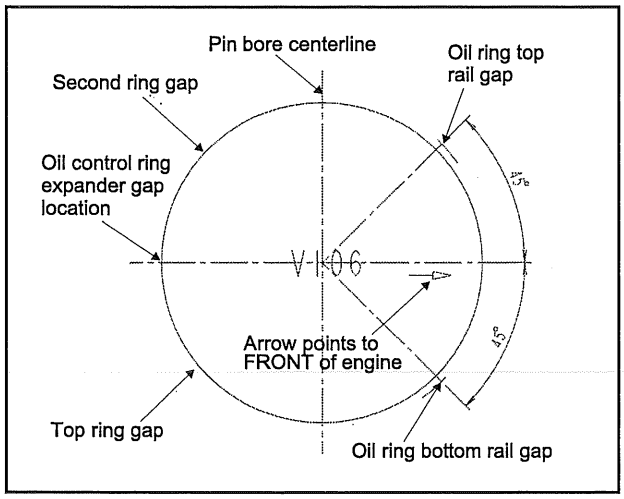

PISTON INSTALLATION

The pistons are marked with an arrow on the crown. Install pistons on connecting rods with arrow (A) facing the FRONT of the engine.

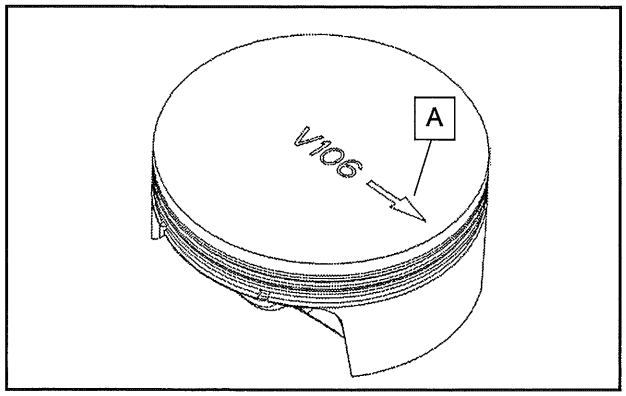

1. Place a clean shop towel over crankcase to prevent foreign material from entering crankcase.
2. Install a new circlip on one side of the piston with end gap facing UP (12:00 position.)

CAUTION
Never reuse piston pin circlips.

3. Apply assembly lube piston pin and I.D. of connecting rod small end.

Moly assembly paste PN: 2871460

4. Install piston over connecting rod with arrow on piston crown facing FRONT of engine.

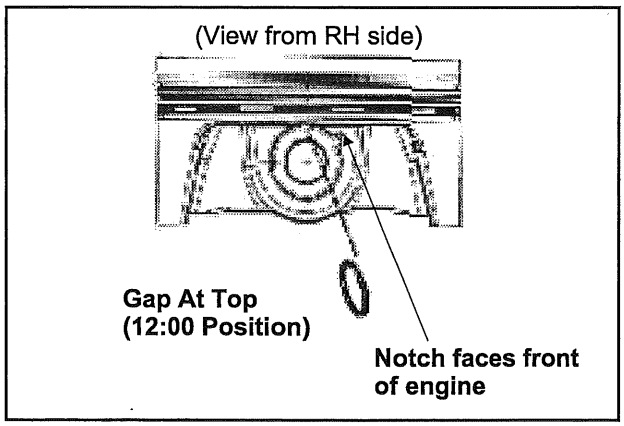

5. Push piston pin through rod and piston pin hole until it is stopped by circlip.
6. Install remaining circlip with end gap facing up (12:00 position).

7. Make sure both piston circlips are seated properly in the groove.

CYLINDER INSTALLATION

NOTE

Be sure all top end parts are ready for assembly. Sealant on crankcase parting line must not be allowed to dry before top end is assembled and torqued.

1. First wash cylinders with clean solvent, then with hot soapy water.
2. Rinse the cylinders with clear water and immediately dry with compressed air. Cylinder bore should be wiped with a clean white shop towel and engine oil.
3. Apply a light coat of engine oil to piston and rings.
4. Ensure cylinder alignment dowel pins are in place and gasket surfaces are clean and oil-free.
5. Apply a small amount of crankcase sealant to the crankcase parting lines on base gasket surface (A).

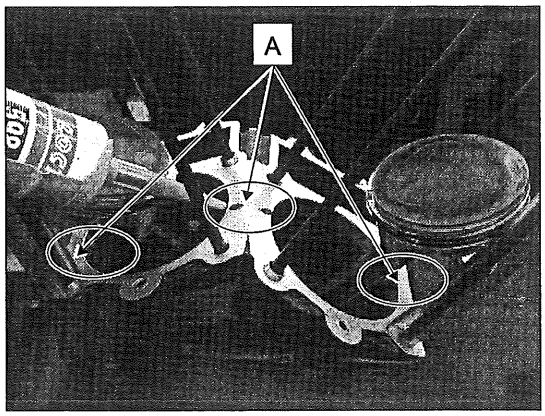

6. Install new cylinder base gaskets onto crankcase.

NOTE

Inspect all sealing surfaces carefully for scratches or imperfections. DO NOT allow oil or grease to contact gaskets or sealing surfaces during the assembly process.

7. Apply a small amount of engine oil to inside surfaces of a piston ring compressor band.

Piston Ring Compressor Band:PV-43570-2
Piston Ring Compressor Pliers PV-43570-1

8. Install piston ring compressor over rings and compress rings into ring grooves.

CAUTION

Be sure compressor band end gap does not align with any ring end gap when compressing the rings.

NOTE

Install cylinders in their original locations.

9. Remove protective covering from crankcase.
10. Carefully install cylinder(s) over piston/ring assembly. Do not force cylinder over piston. Monitor rings carefully. If a piston ring becomes dislodged from the ring compressor; remove cylinder, inspect ring carefully for damage.

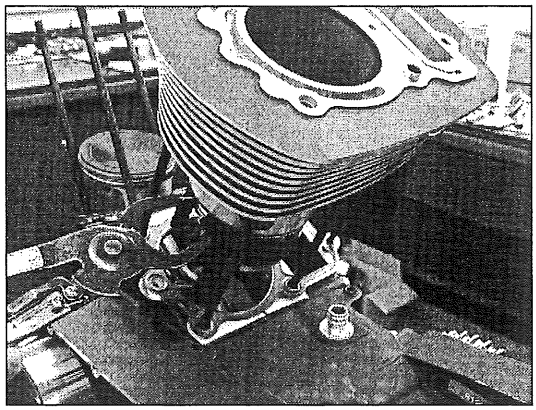

11. Remove piston ring compressor when rings are fully captive in cylinder.
12. Slide cylinder down over piston until seated to base gasket and crankcase surface.
13. Repeat for other cylinder.
14. Install cylinder head (s). (see Cylinder Head / Camshaft Installation, page 7.21).

TROUBLESHOOTING CYLINDER & PISTON

PROBLEM	POSSIBLE CAUSE	AFFECTED PART(S)	REPAIR RECOMMENDED
Engine Hard Starting or Engine Will Not Start	Low Compression	Lifter(s) Locked	Refer to Cylinder Head / Valves Chapter
		Collapsed Hydraulic Lifter (s). Lifter Extremely Noisy.	Refer to Cylinder Head / Valves Chapter
		Worn Valve Guide(s)	Refer to Cylinder Head / Valves Chapter
		Poor Seating of Valve(s)	Refer to Cylinder Head / Valves Chapter
		Broken Valve Springs	Refer to Cylinder Head / Valves Chapter
		Spark Plug Not Seated	Torque Spark Plug
		Incorrect Valve Timing	Refer to Cylinder Head / Valves Chapter
		Valve Stuck Open	Refer to Cylinder Head / Valves Chapter
		Leaking Cylinder Head Gasket	Check for Warped Head and Replace Head Gasket
		Slow Starter Motor	Refer to Electrical Chapter
		Worn Cylinder, Piston and / or Rings	Replace parts that do not meet specification
		Ignition Problem	Refer to Electrical Chapter
		Fuel Problem	Refer to Fuel System Chapter
Poor High Speed Performance	Valve Float	Weak Valve Springs	Refer to Cylinder Head / Valves Chapter
	Insufficient Valve Travel	Worn Camshaft / Rocker Arms	Refer to Cylinder Head / Valves Chapter
	Valves Opening & Closing at Wrong Time	Valve Timing Incorrect	Refer to Cylinder Head / Valves Chapter
	Ignition Problem	—	Refer to Electrical Chapter
	Fuel System Problem	—	Refer to Fuel System Chapter
	Air Intake Problem	—	Refer to Fuel System Chapter
Lack of Power in all RPM Ranges	Incorrect Valve Clearance	Hydraulic Lifter Bleeding Down	Refer to Cylinder Head / Valves Chapter

PROBLEM	POSSIBLE CAUSE	AFFECTED PART(S)	REPAIR RECOMMENDED
	Collapsed Hydraulic Lifter (s). Lifter Extremely Noisy.	Air trapped in lifter. Noise will stop after 10–15 minutes of high idle operation. If air will not bleed, replace lifter.	Refer to Cylinder Head / Valves Chapter
	Valve Float	Weak Valve Springs	Refer to Cylinder Head / Valves Chapter
	Valves Opening & Closing at Wrong Time	Valve Timing Incorrect	Refer to Cylinder Head / Valves Chapter
Engine Hard Starting	Fuel Delivery Problem	Low Fuel Pressure	Refer to Fuel System Chapter
	Ignition Problem	No Spark or Weak Spark	Refer to Electrical Chapter
Engine Idles Poorly	Fuel Management Incorrect	Air leaks intake tract	Refer to Fuel System Chapter
		IAC system malfunction, air leak, or restriction	Refer to Fuel System Chapter
	Low Compression	Collapsed Hydraulic Lifter (s). Lifter Extremely Noisy	Refer to Cylinder Head / Valves Chapter
		Lifter(s) Locked	Refer to Cylinder Head / Valves Chapter
		Poor Seating of Valve(s)	Refer to Cylinder Head / Valves Chapter
		Worn Cylinder, Pistons and/or Rings	Replace parts that do not meet specification
Lack of Power in all RPM Ranges	Insufficient Valve travel	Worn Camshaft/Rocker arms	Refer to Cylinder Head / Valves Chapter
	Low Compression	Worn Piston, Rings, Cylinder	Replace parts that are worn beyond the service limit
Leaks	Improper Assembly	Cylinder, Gaskets, Gasket Surfaces	Perform white powder test to determine leak path. Assemble parts clean and free of oil, grease, or debris.
		Incorrect Fastener Torque	Torque fasteners properly
	Damaged gasket sealing surface(s)	Cylinder/Crankcase	Repair surface or replace part
Noise	Excessive piston to cylinder clearance	Piston / Cylinder	Replace parts that are worn beyond the service limit
	Excessive piston pin clearance (to piston or connecting rod)	Piston / Pin / Connecting Rod	Replace parts that are worn beyond the service limit

PROBLEM	POSSIBLE CAUSE	AFFECTED PART(S)	REPAIR RECOMMENDED
	Exhaust Leak	-	Inspect seal of exhaust system at cylinder head

CHAPTER 9
CLUTCH, PRIMARY / SHIFT

GENERAL 9.3
SERVICE INFORMATION 9.3
CLUTCH SPECIFICATIONS 9.3
SERVICE / MAINTENANCE 9.3
PRIMARY DRIVE SPECIAL TOOLS 9.3
ASSEMBLY VIEWS / TORQUE VALUES 9.4
CLUTCH (CABLE) 9.4
SHIFT LINKAGE / FOOTREST FASTENER TORQUE 9.5
PRIMARY COVER ASSEMBLY VIEW 9.6
SHIFT MECHANISM ASSEMBLY VIEW 9.7
SERVICE PROCEDURES 9.8
CAP PLATE & CAP PLATE SEAL REMOVAL 9.8
CAP PLATE & CAP PLATE SEAL INSTALLATION 9.8
CLUTCH PINION SHAFT REMOVAL 9.8
CLUTCH PINION SHAFT BEARING INSPECTION 9.8
CLUTCH PINION SHAFT SEAL REMOVAL & INSTALLATION 9.9
CLUTCH PINION SHAFT INSTALLATION 9.10
PRIMARY COVER REMOVAL 9.10
SHIFT RATCHET REMOVAL & INSPECTION 9.11
SHIFT RATCHET INSTALLATION 9.12
SHIFT SHAFT BEARING & SEAL REPLACEMENT 9.13
PRIMARY COVER INSTALLATION 9.13
LOCKING THE CRANKSHAFT 9.15
CLUTCH SERVICE 9.16
CLUTCH ASSEMBLY VIEW & TORQUE 9.16
CLUTCH REMOVAL 9.17
CLUTCH DISASSEMBLY 9.17
CLUTCH INSPECTION 9.19
CLUTCH ASSEMBLY 9.21
CLUTCH INSTALLATION 9.23
PRIMARY DRIVE 9.24
ASSEMBLY VIEW - PRIMARY DRIVE 9.24
TORQUE COMPENSATOR REMOVAL 9.25
TORQUE COMPENSATOR INSPECTION (EARLY BUILD) 9.26
TORQUE COMPENSATOR INSPECTION (LATE BUILD) 9.27
TORQUE COMPENSATOR INSTALLATION 9.27
ROTOR (FLYWHEEL) REMOVAL 9.29
ROTOR (FLYWHEEL) INSTALLATION 9.29
SPLIT GEAR REMOVAL 9.30
SPLIT GEAR INSPECTION 9.30
SPLIT GEAR INSTALLATION 9.30
STARTER DRIVE 9.32

STARTER DRIVE REMOVAL 9.32
STARTER GEAR INSPECTION 9.32
STARTER CLUTCH REMOVAL / INSPECTION 9.32
PRIMARY DRIVE GEAR 9.34
PRIMARY DRIVE GEAR REMOVAL / INSPECTION 9.34
STARTER TORQUE LIMIT CLUTCH INSPECTION 9.34
PRIMARY DRIVE GEAR INSTALLATION 9.35
STARTER GEAR / STARTER CLUTCH INSTALLATION 9.36
TROUBLESHOOTING 9.38

GENERAL

SERVICE INFORMATION

- Clutch and external transmission shift linkage service can be accomplished with the engine in the frame.
- Internal transmission or internal shifting mechanism service requires engine removal and crankcase separation.
- Oil additives of any kind are not recommended by Victory. Using oil additives or oil of the wrong viscosity can have a detrimental affect on clutch performance, operation, and service life.
- Burnt clutch plates are not an indication of a defect. Burnt clutch plates can indicate that the plate service life has been exceeded, that a problem exists within the clutch system, that the clutch has been used improperly, or that the plates were contaminated by improper oil or additives.
- Victory 20W/40 motorcycle oil is recommended for all operating temperatures. If Victory 20W/40 oil is not available, a high quality 20W/40 motorcycle oil suitable for use in wet clutch transmissions can be used.
- Lubricate parts during assembly as described in the procedures.
- Corroded or sticking shift linkage pivot points can cause abnormal shifting. Replace any linkage components that are damaged or do not move freely, and lubricate at regular intervals.

CLUTCH SPECIFICATIONS

ITEM		SPECIFICATIONS
Clutch, Gear Shift, and Linkage	Clutch Type	Wet, Multi-Disk
	Clutch Operating Mechanism	Cable
	Torque Compensator	Belleville Spring Loaded Cam Assembly
	Primary Reduction Ratio	1.5 : 1
	Transmission Shift Mechanism	Manually Operated, Spring Centered
	Gearshift Pattern	1-N-2-3-4-5-6
	Clutch Spring (Diaphragm Type)	145 lb. (Green Paint Mark)

SERVICE / MAINTENANCE

Clutch / Gearshift / Linkage

ITEM	STANDARD	SERVICE LIMIT
Clutch Lever and Pivots	Lubricate	Refer to Periodic Maintenance Ch2
Clutch Cable Freeplay	0.50-1.50 mm (0.020-0.060")	-

PRIMARY DRIVE SPECIAL TOOLS

SPECIAL TOOL	PART NUMBER
Crankshaft Rotation Socket	PV-48736
Clutch Shaft Holder	PV-45028
Clutch Spring Compressor	PV-45032
Engine Lock Tool	PV-43502-A
Rotor (Flywheel) Puller	PV-43533
1/4 inch (or 6mm) and 5/16 (or 8mm) Pin Punch or Flat Punch	Commercially available
Moly Assembly Paste	2871460

ASSEMBLY VIEWS / TORQUE VALUES

CLUTCH (CABLE)

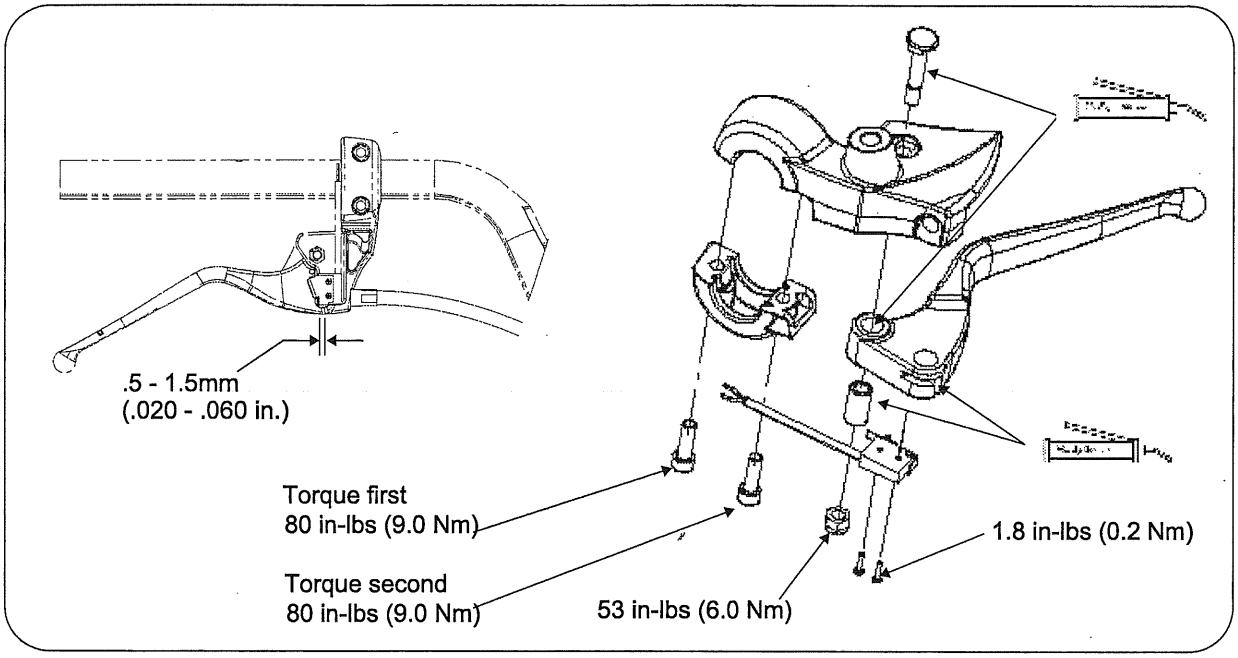

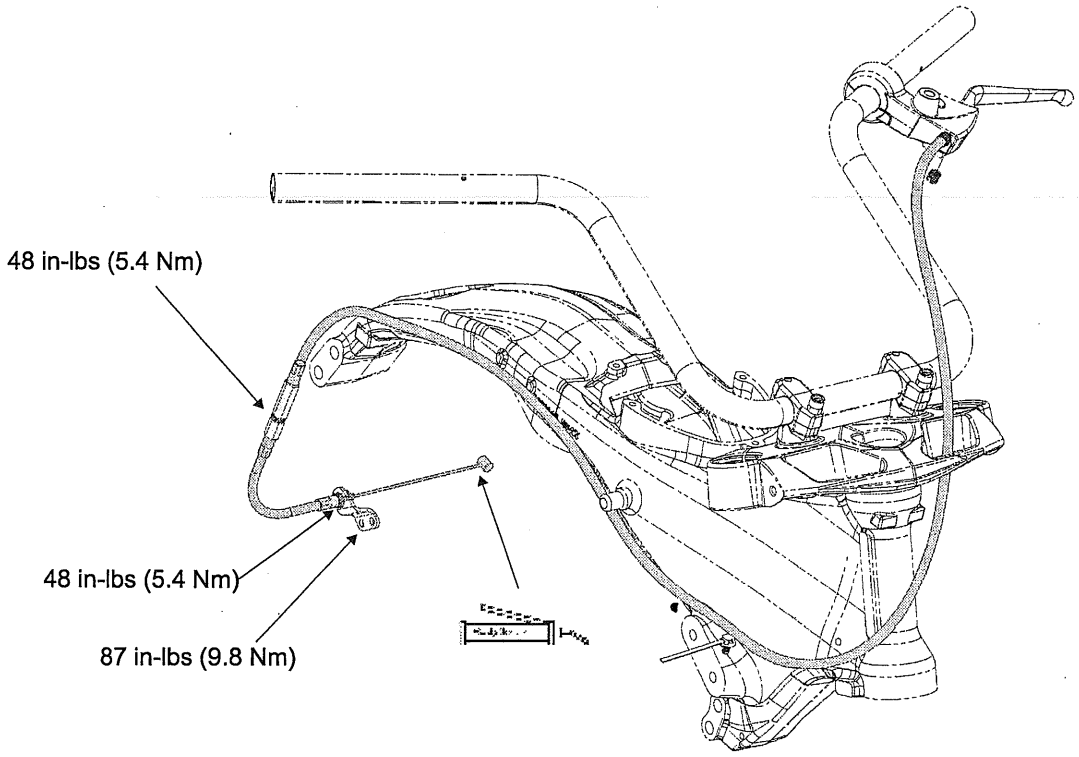

SHIFT LINKAGE / FOOTREST FASTENER TORQUE

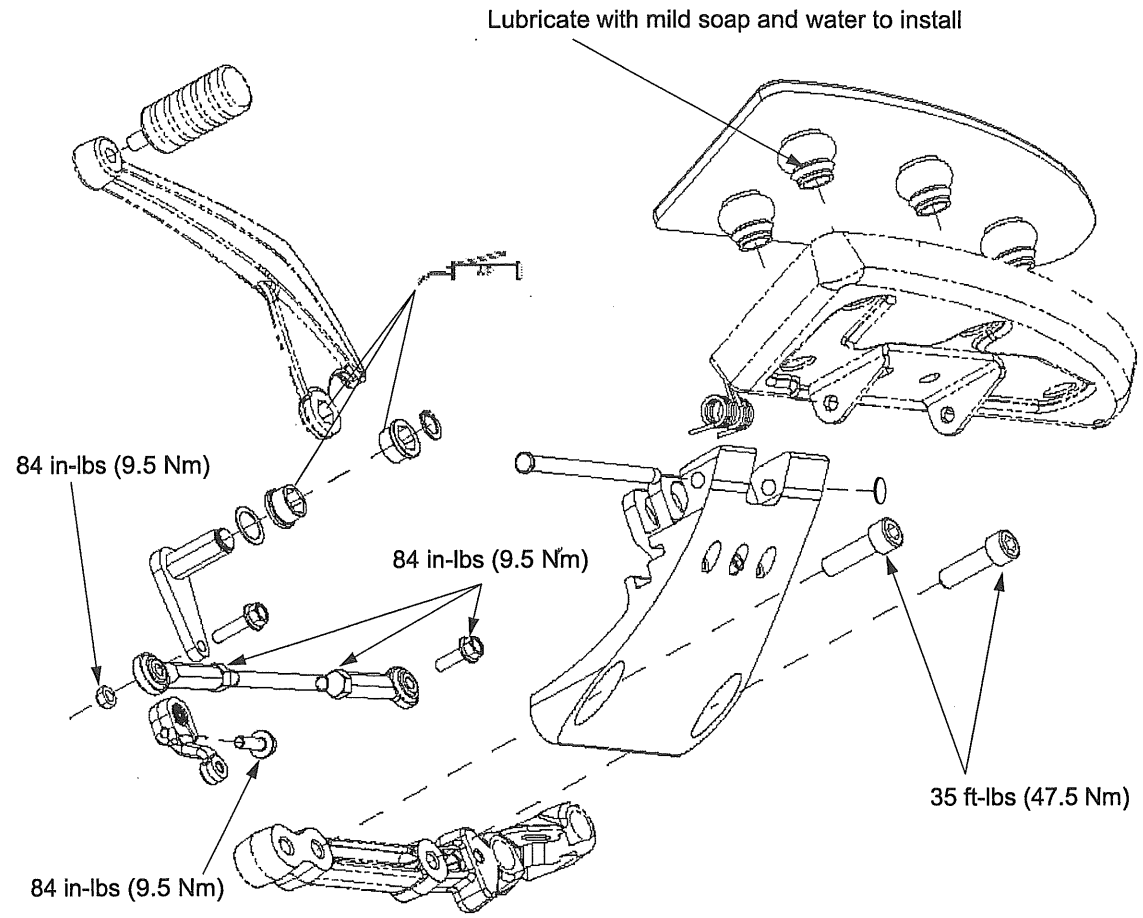

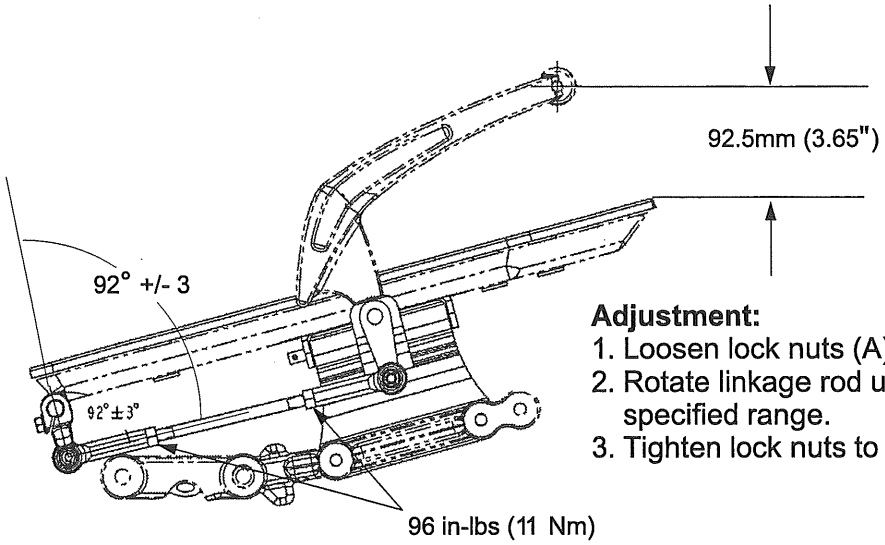

Adjustment:

1. Loosen lock nuts (A)
2. Rotate linkage rod until pedal height is within specified range.
3. Tighten lock nuts to 96 in-lbs (11 Nm).

9

PRIMARY COVER ASSEMBLY VIEW

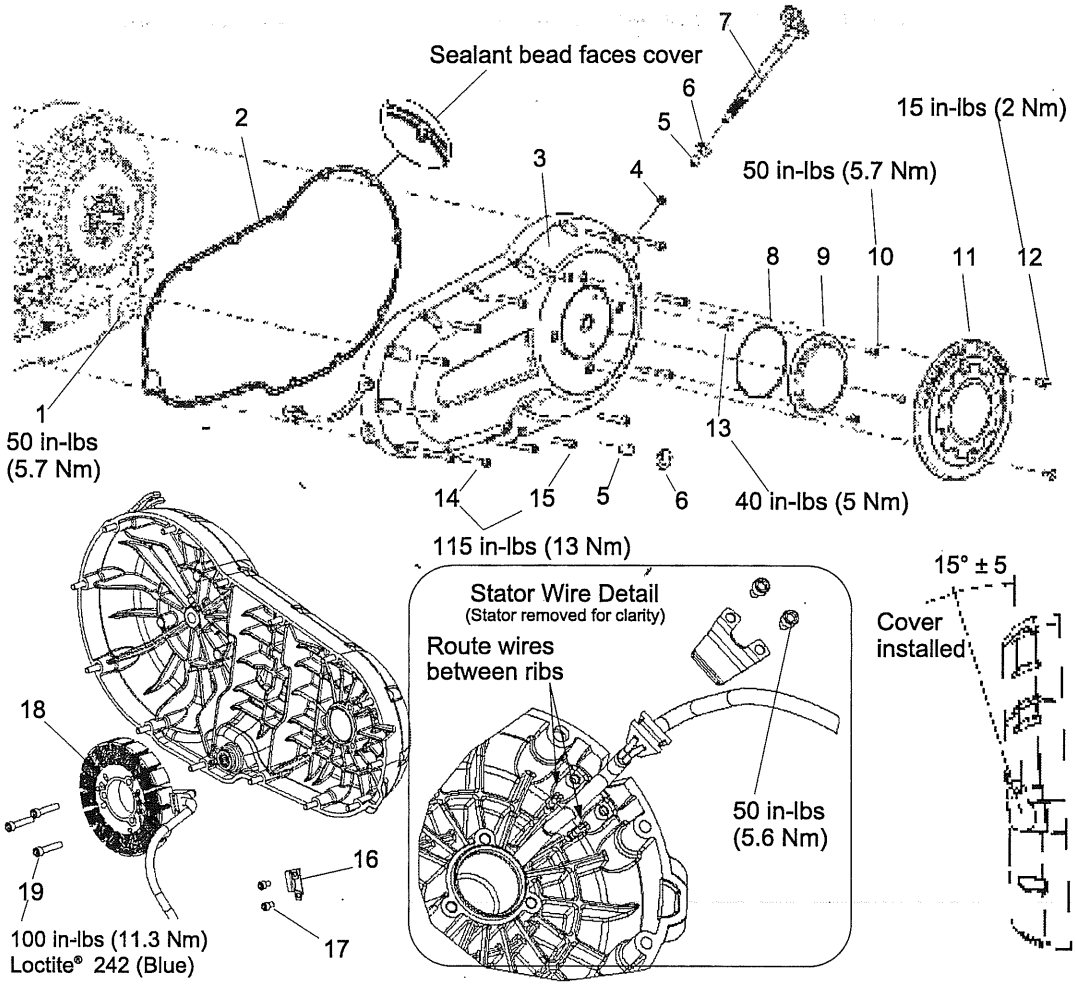

1. Sensor, Oil Pressure
2. Gasket, Primary Cover
3. Asm, Primary Cover (Incl. 4, 5, 6)
4. Bearing, Needle (1)
5. Bearing, Needle (2)
6. Seal (2)
7. Pinion, Clutch
8. O-Ring
11. Cap Plate
12. Screw (2) 6x14 Tapered
13. Screw, Dog Point (1) 8x16
14. Screw, (16) 6x40
15. Screw (1) 6x30
16. Bracket, Stator Wire
17. Screw, (2) 5x8

CAUTION
The rotor contains powerful magnets. Use caution when installing primary cover to avoid personal injury. Refer to Primary Cover Installation, page 9.13.

SHIFT MECHANISM ASSEMBLY VIEW

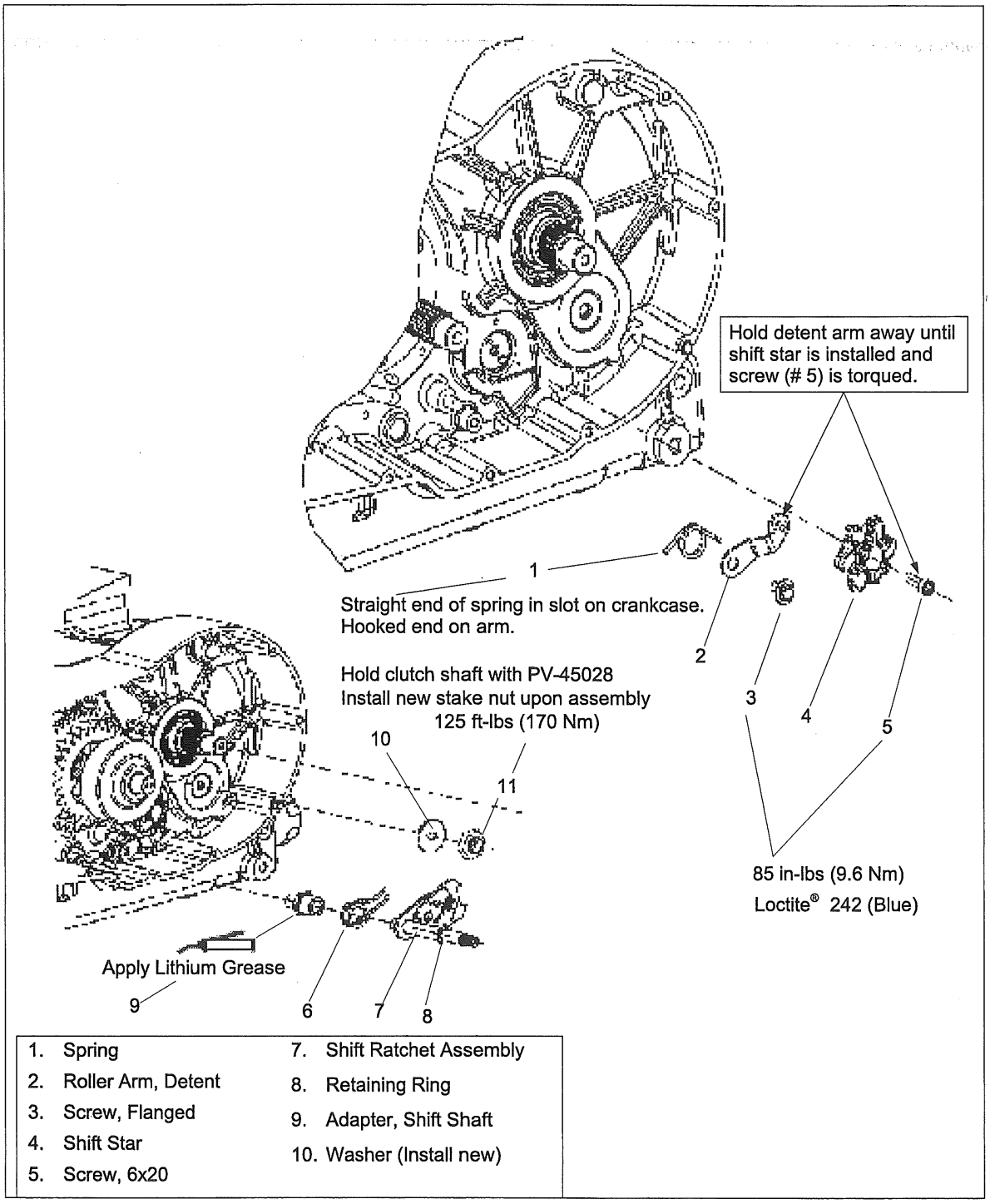

1. Spring	7. Shift Ratchet Assembly
2. Roller Arm, Detent	8. Retaining Ring
3. Screw, Flanged	9. Adapter, Shift Shaft
4. Shift Star	10. Washer (Install new)
5. Screw, 6x20	

9

SERVICE PROCEDURES

CAP PLATE & CAP PLATE SEAL REMOVAL

1. Remove screws ① and cap plate.
2. Remove three screws ②, cover ③, and O-ring ④.

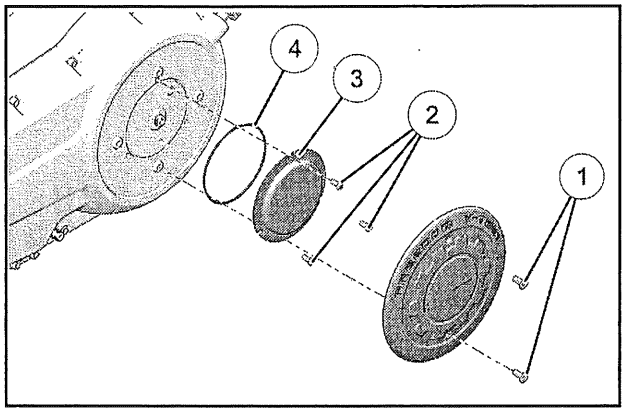

CAP PLATE & CAP PLATE SEAL INSTALLATION

1. Install new O-ring ④.
2. Install cover ③.
3. Torque cover screws ② to spec.

TORQUE
Cover Screws: **5.6 Nm (50 in.-lb)**

4. Install cap plate with screws ① and torque to spec.

TORQUE
Cap Plate Screws **1.7 Nm (15 in.-lb)**

CLUTCH PINION SHAFT REMOVAL

1. Protect finish of pinion shaft ⑤. Use an adjustable wrench to rotate arm inward and remove cable from pinion shaft.

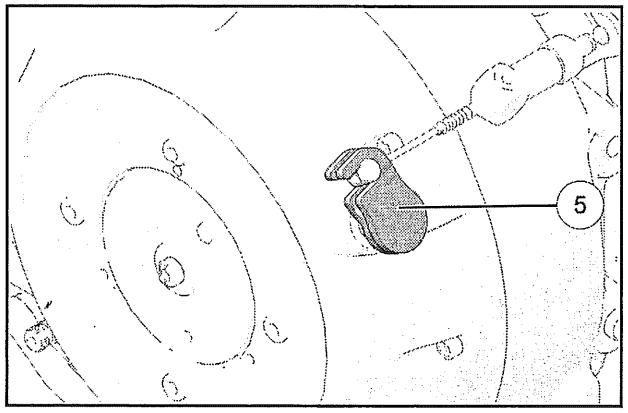

2. Remove primary cover cap plate, cover plate, and O-ring (Cap Plate & Cap Plate Seal Removal, page 9.8).
3. Remove dog point screw ⑥.
4. Pull clutch pinion shaft out of primary cover.

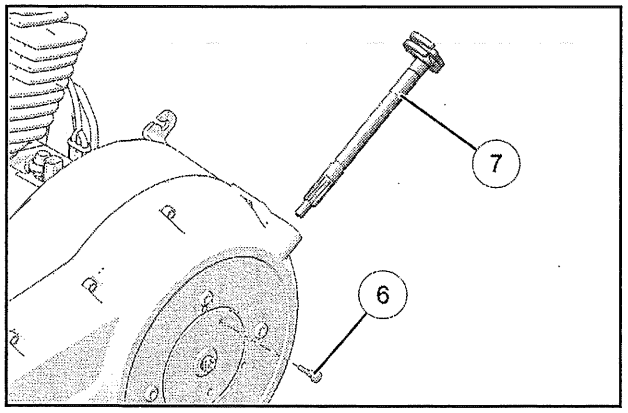

5. Inspect pinion shaft gear teeth ⑦ for cracks, broken teeth, or wear.

CLUTCH PINION SHAFT BEARING INSPECTION

1. Apply engine oil to the bearings.
2. Temporarily install pinion shaft into primary cover.

9927627 - 2012 – 2017 Cross Roads, Hard-Ball, Cross Country, Magnum Service Manual
© Copyright

3. Turn shaft by hand. Replace bearings that feel rough, notched, or loose.

CLUTCH PINION SHAFT SEAL REMOVAL & INSTALLATION

1. Remove clutch pinion shaft (Clutch Pinion Shaft Removal, page 9.8).
2. Carefully pry seal ① out of primary cover.

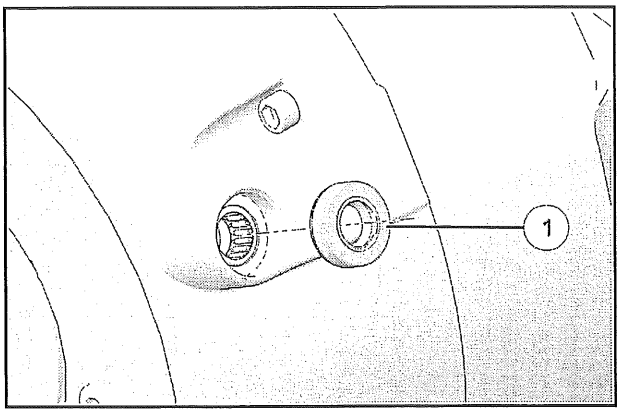

3. Lubricate outer edge of new seal with engine oil and sealing lip with grease.
4. Drive seal into place with a suitable driver.

CLUTCH PINION SHAFT INSTALLATION

1. Lubricate and install clutch pinion shaft. Rotate release rack with screwdriver until flat side of rack is UP and rack teeth align with teeth of pinion shaft.
2. Push pinion shaft into cover until seated.

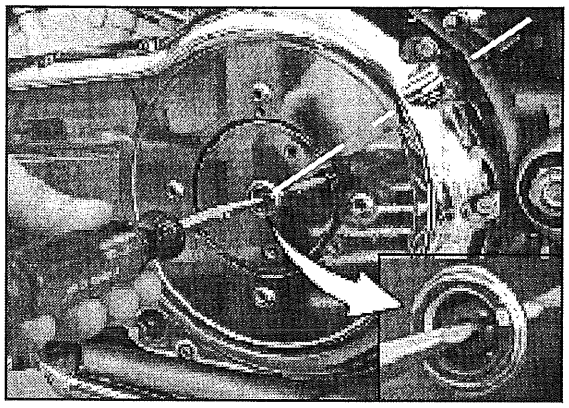

3. Push lightly inward by hand on the clutch arm until it stops. The arm must be positioned at a 15°±5° angle to primary cover parting line when it stops. If angle is not correct, lift arm, rotate as needed, and re-install until angle is correct.
4. Install dog-point screw ① to spec.

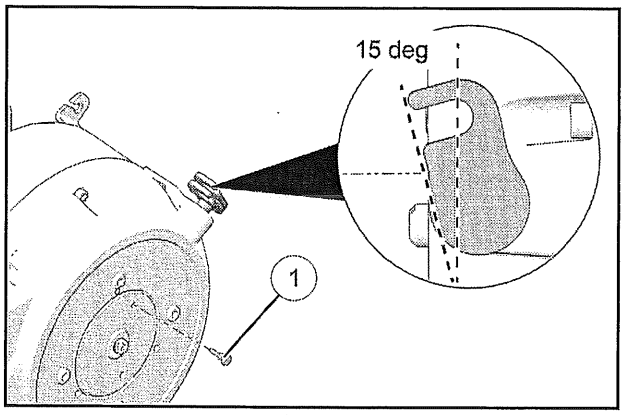

TORQUE
Dog-Point Screw **40 in-lbs (4.5 Nm)**

PRIMARY COVER REMOVAL

1. Refer to exploded view on Primary Cover Assembly View, page 9.6.
2. Remove shift linkage and footrest as an assembly (Shift Linkage / Footrest Fastener Torque, page 9.5). Note dots on arm and shaft must be aligned for assembly

   Pull Rod / Cable Removal From Release Arm
3. Protect finish of pinion shaft release arm and use an adjustable wrench to rotate arm toward primary cover.
4. Remove pull rod or cable end from release arm. Do not bend pull rod or kink cable.

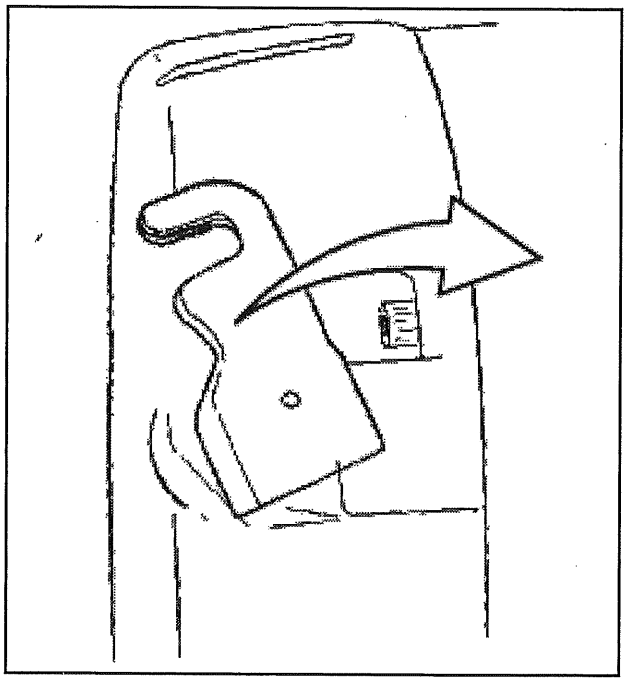

5. Remove cap plate and cap plate seal (Cap Plate & Cap Plate Seal Removal, page 9.8).
6. Remove clutch pinion shaft (Clutch Pinion Shaft Removal, page 9.8).

NOTE
Pinion shaft removal is not required for primary cover removal unless pinion shaft service is required.

7. Drain engine oil into suitable container.

NOTE
Primary cover can be removed without draining engine oil by safely leaning and supporting motorcycle at an angle to the right.

8. Remove primary cover screws.

NOTE

Note position of shorter screw ① in the hole just to the rear of the shift shaft.

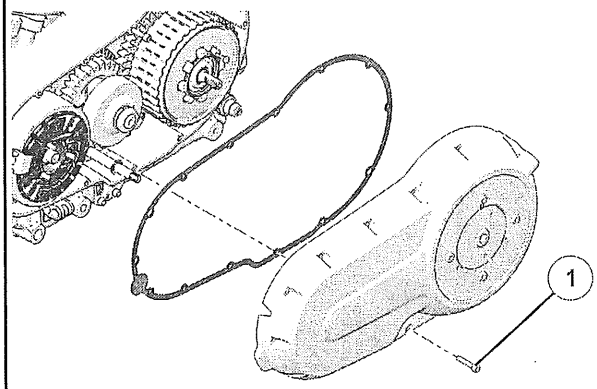

9. Tap cover with a soft face hammer to loosen.
10. Pull primary cover outward evenly at front and rear of cover to remove.

SHIFT RATCHET REMOVAL & INSPECTION

1. Shift transmission into neutral.

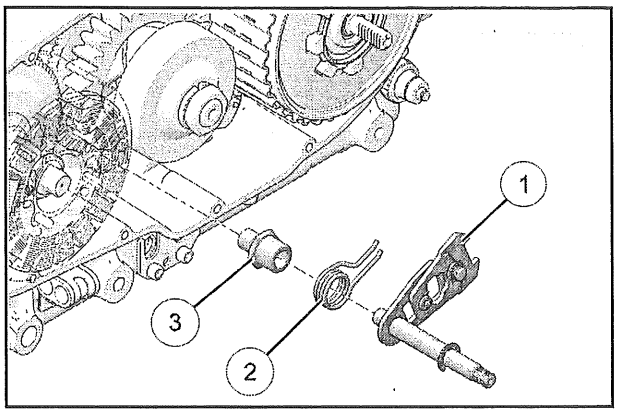

2. Remove primary cover (Primary Cover Removal, page 9.10).
3. Pull straight outward on shaft to remove the shift ratchet assembly ① with return spring ② attached.
4. Inspect shift shaft adapter ③ on crankcase for wear and verify it is tight.
5. Inspect shift shaft return spring for cracks or loss of tension. The spring should have enough tension to keep the shift shaft centered.

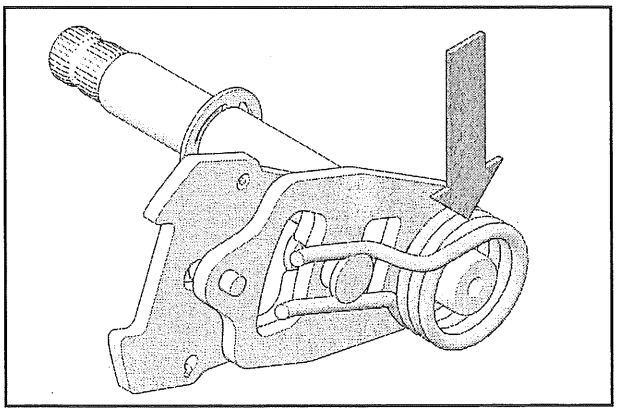

6. Inspect shift shaft for wear or damage.
7. Inspect compression spring ④ for tension. The spring should apply enough tension on the shift ratchet mechanism to keep it extended.
8. Inspect fit of rivet ⑤ on shift ratchet assembly. It should allow for free movement, but not be excessively loose.

9. Inspect fit of locating retainer clip ⑥ and all parts of ratchet for cracks or damage.

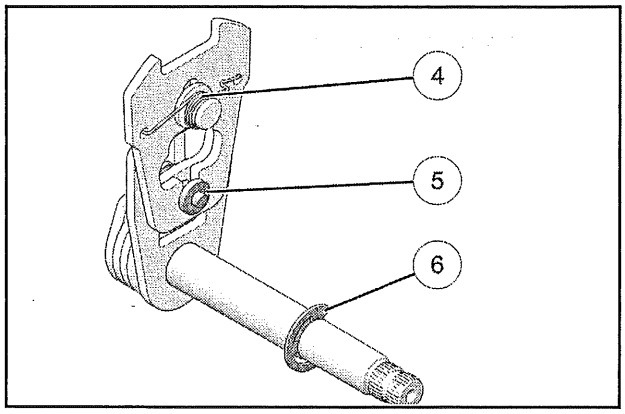

10. Inspect cases around shift shaft adapter for cracks.
11. Use a pin punch to hold detent roller away and remove shift star ⑦ from shift drum.
12. Inspect shift star.
13. Inspect detent roller arm ⑧ for wear or damage.
14. Inspect spring ⑨ for proper tension.
15. Remove detent roller arm and spring.

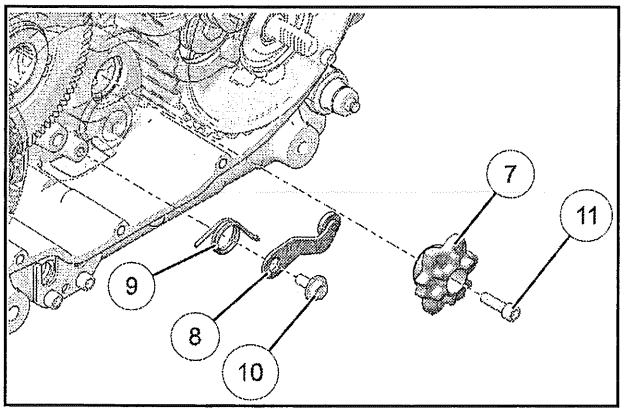

SHIFT RATCHET INSTALLATION

Refer to Shift Mechanism Assembly View on Shift Mechanism Assembly View, page 9.7.

1. Apply Loctite 242 (Blue) to clean threads of detent roller screw. Install detent roller arm ⑧ with spring and torque screw to spec.

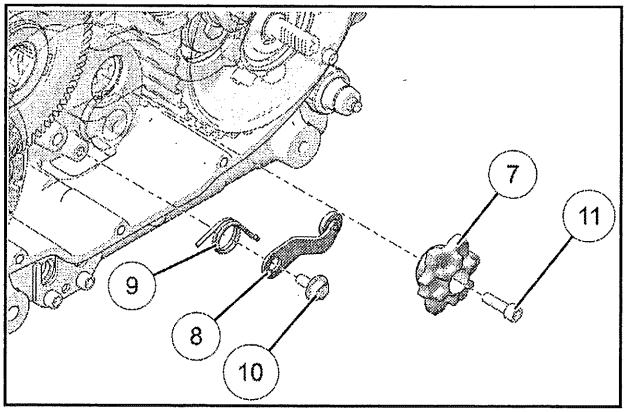

TORQUE
Detent Roller Arm Screw: **85 in-lbs (9.6 Nm)**

2. Be sure balance gear oiler pin ② is tight in crankcase.
3. Torque shift shaft adapter ③ and apply a small amount of lithium grease to shift shaft bore.

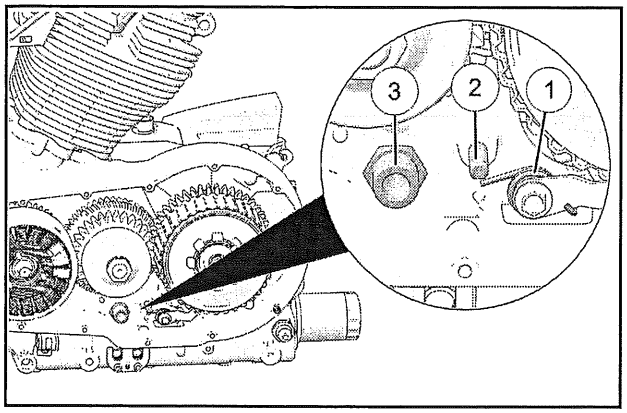

TORQUE
Shift Shaft Adapter: **25 ft-lbs (34 Nm)**

4. Clean threads of shift star screw with Loctite Primer N and apply a few drops of Loctite 242 (Blue) to threads.
5. Hold detent roller ⑦ away with a pin punch and install shift star. Torque screw to spec.

TORQUE
Detent Roller Screw: **85 in-lbs (9.6 Nm)**

6. Install shift ratchet into shift shaft adapter with centering spring ④ attached. Slide ratchet fork ⑤ away from shift star and hold. Center the legs of ratchet return spring on pin and push ratchet in until seated.

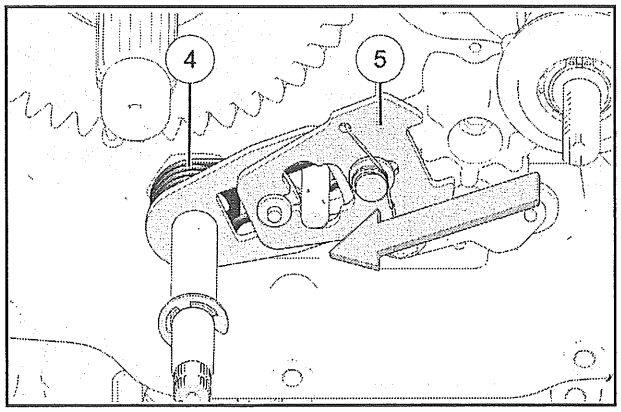

7. Release ratchet fork to engage ratchet with shift star.
8. Install clutch (Clutch Installation, page 9.23).

SHIFT SHAFT BEARING & SEAL REPLACEMENT

1. Remove primary cover (Primary Cover Removal, page 9.10). Carefully pry shift shaft seal ① from cover.

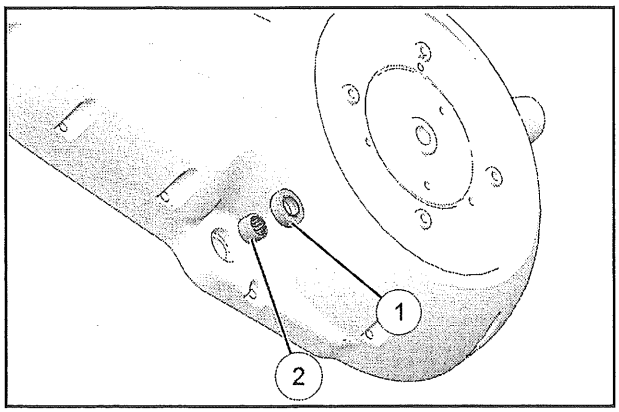

2. Using a suitable arbor and arbor press, press bearing ② from inside of cover to outside.
3. Apply assembly lube to inner & outer surfaces of new bearing.

   Moly assembly paste PN: 2871460

4. Press bearing into place with numbered side out until fully seated.
5. Apply a small amount of grease to lip of seal and apply engine oil to outside of seal.
6. Drive seal into place with a seal driver slightly smaller than the O.D. of seal.
7. Install primary cover (Primary Cover Installation, page 9.13).
8. After installing primary cover, be sure shift shaft returns freely to the centered position after rotating up or down.

PRIMARY COVER INSTALLATION

1. Clean gasket surfaces of crankcases and cover.
2. Verify alignment pins ① are in position and pinion shaft is removed from cover.
3. Place new primary cover gasket on crankcase with sealant bead ② out (toward cover). Loctite® 534 can be used to hold gasket in place.

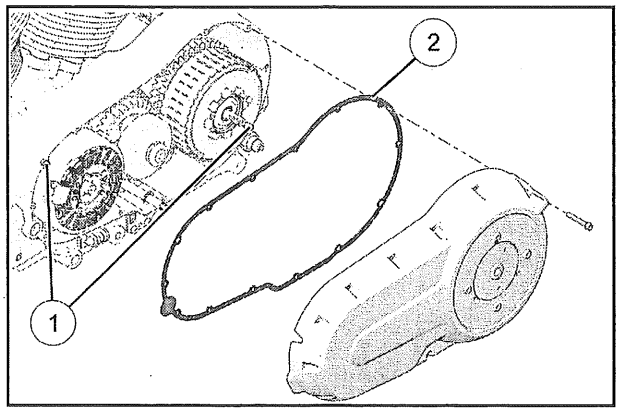

4. Install cover keeping it parallel to crankcase to prevent binding on shift shaft.

CAUTION
The rotor magnets have considerable energy. DO NOT place fingers between primary cover gasket surface and other parts or they may be pinched.

9

5. Install primary cover screws.

NOTE

Short screw ③ is placed in hole just behind shift shaft.

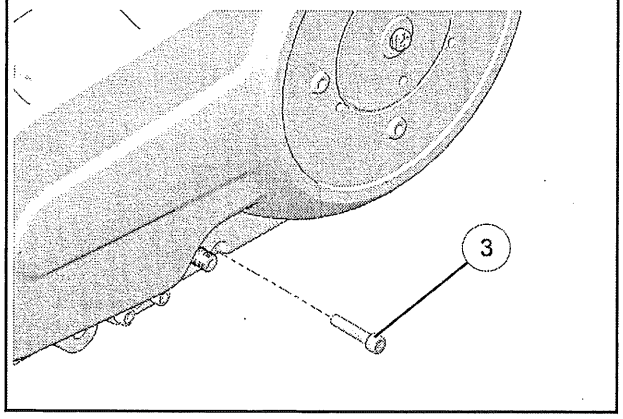

6. Torque primary cover screws in two steps to specification. Repeat torque on all screws.

TORQUE

Primary Cover Screws:
115 in-lbs (13 Nm)

7. Install pinion shaft (Clutch Pinion Shaft Installation, page 9.10).
8. Install cap plate with seal (Cap Plate & Cap Plate Seal Installation, page 9.8).
9. Lubricate clutch lever pivots and cable ends (Throttle Cable Inspection / Lubrication, page 2.12).
10. Install clutch cable on pinion shaft arm.
11. Install shift linkage arm on shift shaft with dots aligned and install left footrest assembly. Torque linkage arm pinch bolt to spec.

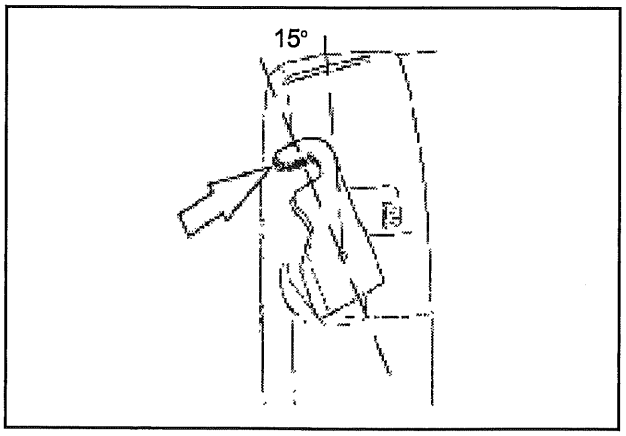

TORQUE

Linkage Arm Pinch Bolt:
84 in-lbs (9.5 Nm)

12. Check engine oil and fill to proper level. See Oil Change Specifications, page 2.4.

LOCKING THE CRANKSHAFT

Service procedures described in this chapter require locking of the gears or shafts to prevent rotation while removing or installing the retaining nuts. Engine Lock Tool PV-43502-A is described in most procedures; however, in some cases it is preferable to lock the engine crankshaft (shown below) or the clutch shaft using tool PV-45028.

- Remove RH lower engine cover.
- Remove crankshaft position timing wheel.
- Rotate engine to front or rear cylinder TDC with tool PV-48736 until 8mm (5/16 inch) pin punch can be inserted into the crankshaft TDC location hole.

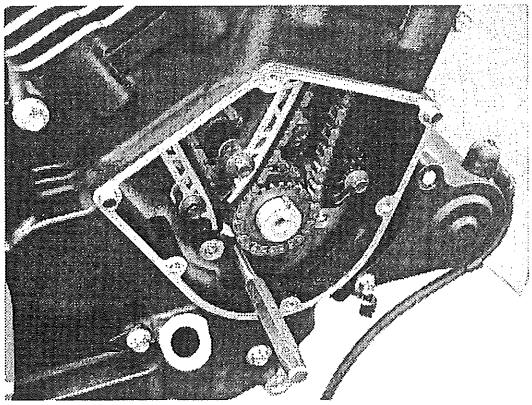

CLUTCH SERVICE

CLUTCH ASSEMBLY VIEW & TORQUE

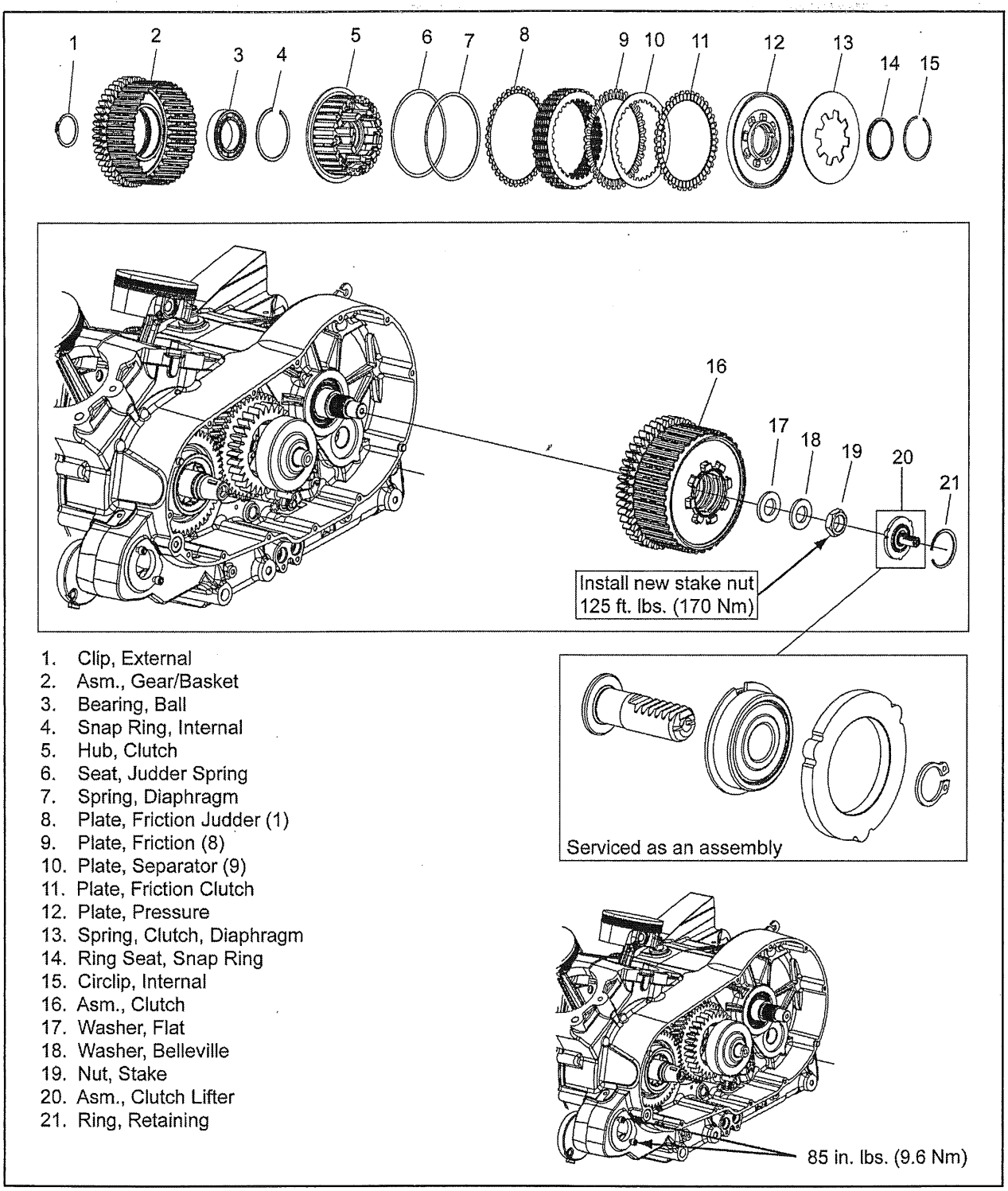

1. Clip, External
2. Asm., Gear/Basket
3. Bearing, Ball
4. Snap Ring, Internal
5. Hub, Clutch
6. Seat, Judder Spring
7. Spring, Diaphragm
8. Plate, Friction Judder (1)
9. Plate, Friction (8)
10. Plate, Separator (9)
11. Plate, Friction Clutch
12. Plate, Pressure
13. Spring, Clutch, Diaphragm
14. Ring Seat, Snap Ring
15. Circlip, Internal
16. Asm., Clutch
17. Washer, Flat
18. Washer, Belleville
19. Nut, Stake
20. Asm., Clutch Lifter
21. Ring, Retaining

CLUTCH REMOVAL

1. Remove primary cover (Primary Cover Removal, page 9.10).
2. Using an internal snap ring pliers, remove clutch rack.

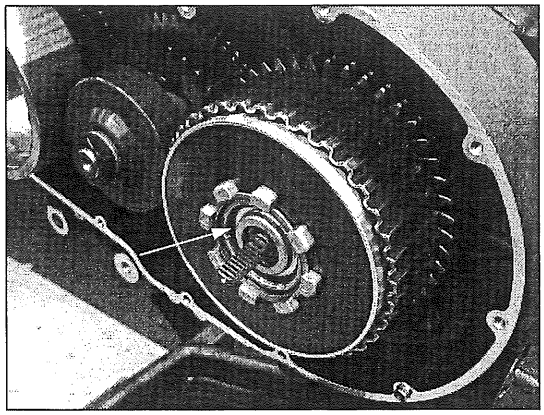

3. Install engine lock tool (A) between crankcase and split gear as shown below to prevent gear rotation and loosen clutch nut (rotor / starter gear removal is not required).

NOTE
An alternate method of preventing gear rotation is to lock the crankshaft as shown on Locking The Crankshaft, page 9.15.

Special tool: Engine lock tool PV-43502-A

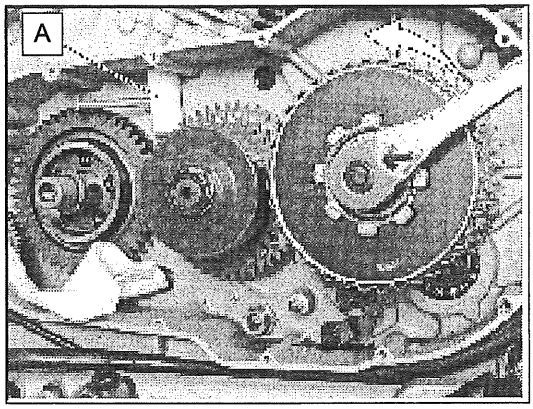

CAUTION
Use caution when removing nut and keep hands and body clear in case tool slips off gears.

4. Remove clutch nut, lock washer, and flat washer. Discard lock washer and nut.
5. Remove clutch assembly from clutch shaft.
6. A new spring washer (B) & Stake nut (C) must be installed upon assembly.

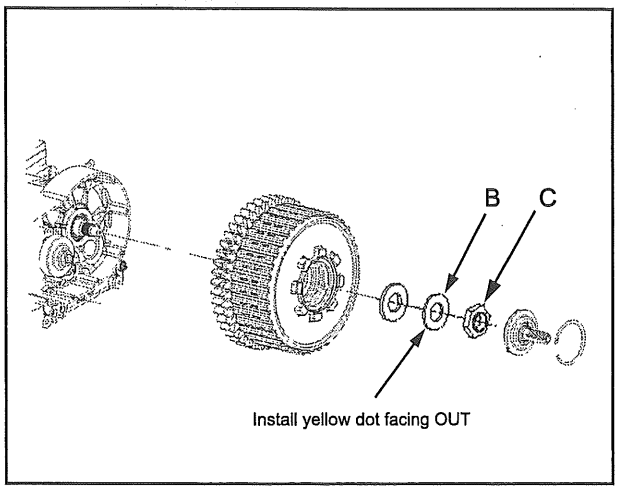

CLUTCH DISASSEMBLY

Special tool: Clutch spring compressor PV-45032

CAUTION
Clutch is under spring pressure. WEAR EYE PROTECTION.

1. Install clutch spring compressor threaded rod and secure it with the snap ring (A).

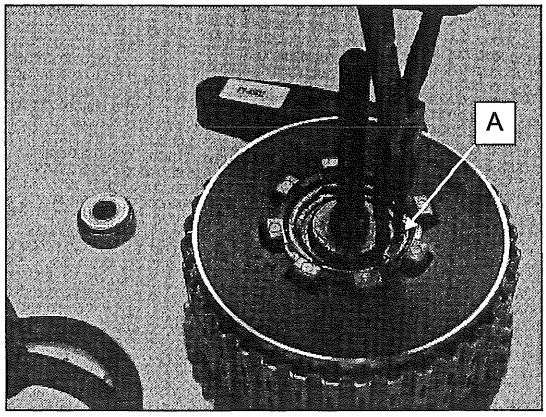

2. Install compressor bridge, bearing, and T-handle over threaded post.

3. Compress clutch spring and remove snap ring.

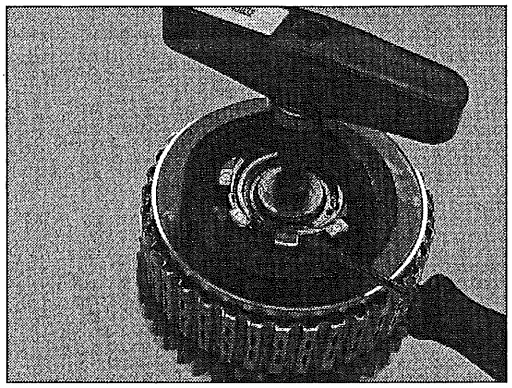

4. Remove retaining ring seat (B) (stepped washer).

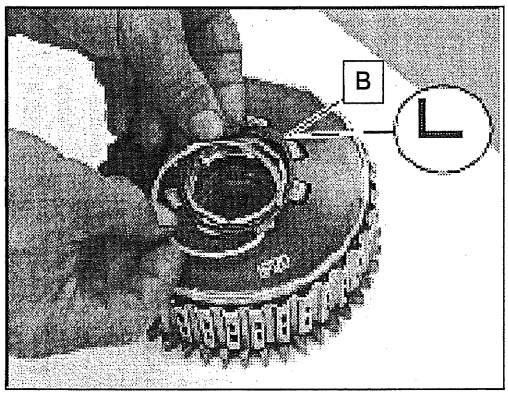

5. Remove tool from clutch.
6. Refer to exploded view on Clutch Assembly View & Torque, page 9.16.
7. Disassemble clutch, laying parts out in order of removal and keep them in order.
8. Remove clutch spring (C) and pressure plate (D).
9. Remove (1) special friction plate (E) that is placed outermost against pressure plate.

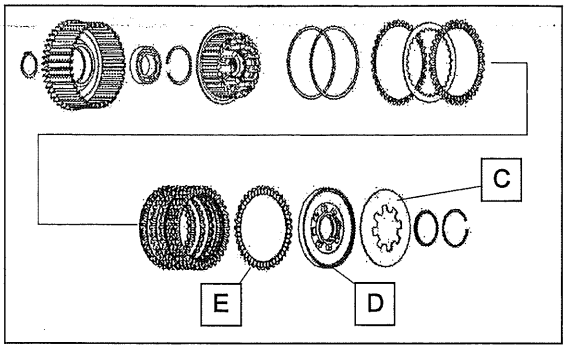

10. The outermost plate can be identified by the wider pads on the friction material.

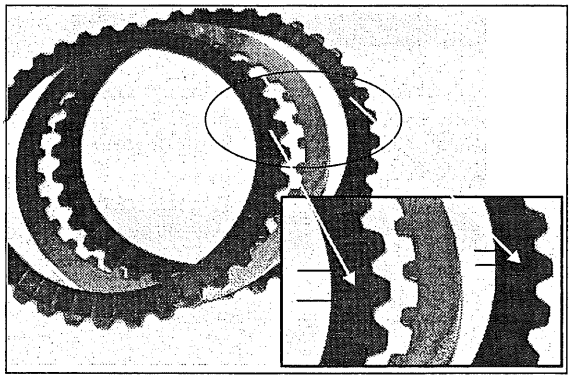

11. Remove (9) identical steel plates that separate the (8) identical friction plates.
12. Remove judder friction plate, judder spring, and judder spring seat.

13. Note difference between judder plate (F) and next friction plate (G). The judder plate is the innermost friction plate on the clutch hub.

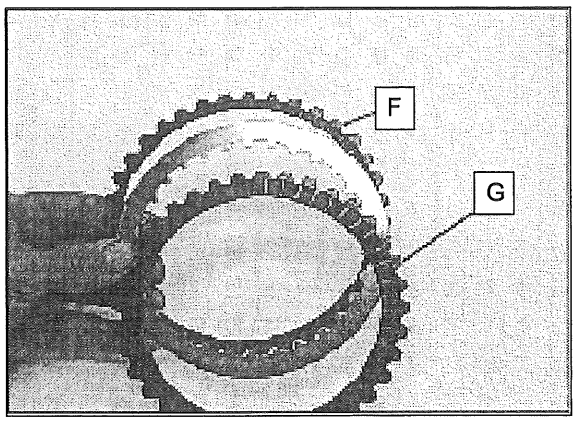

CLUTCH INSPECTION

1. Clean clutch plates, inner hub, and outer basket.
2. Inspect clutch gear teeth (A) for wear, cracks or damage.
3. Inspect inside surfaces (B) of basket for cracks or wear (grooves) from clutch plates.

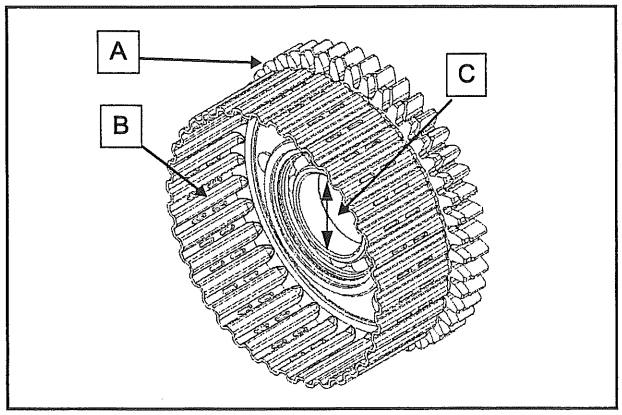

4. Replace parts that fail inspection
5. Rotate hub bearing. Check for smooth rotation. Inner race should have no detectable radial movement (C).
6. Lubricate bearing with engine oil.
7. Inspect spline teeth (D) for wear, cracks or damage.

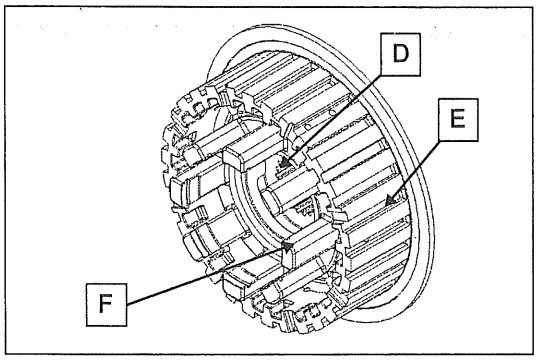

8. Inspect surface of steel plate guides (E) on outer edge of hub for wear, grooves, or damage. Check all posts (F) for cracks or damage. Check the snap ring groove for wear.
9. Visually inspect friction and steel plates for wear or damage on both surfaces. Replace plates as a set if any plate is worn or damaged.

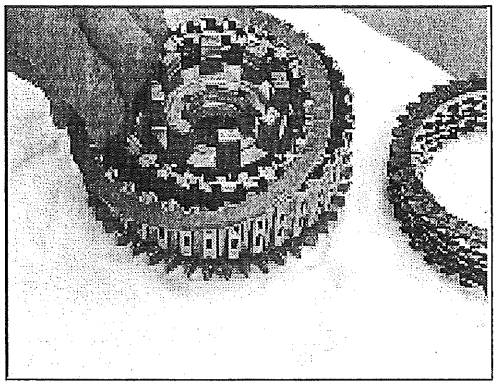

9

10. Replace steel plates if grooved, distorted or discolored. Inspect plates for distortion by placing each plate on a precision flat surface. Insert a feeler gauge (G) between plate and flat surface in several places.

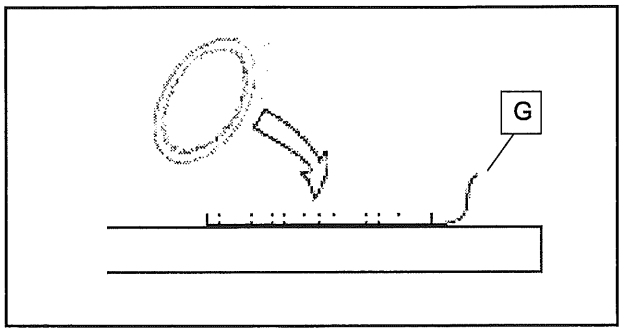

Clutch Steel Plate Warp Service Limit: 0.20 mm (0.008")

11. Measure thickness of friction plates in several places. Thickness should be the same at each place. Replace plates that fail inspection.

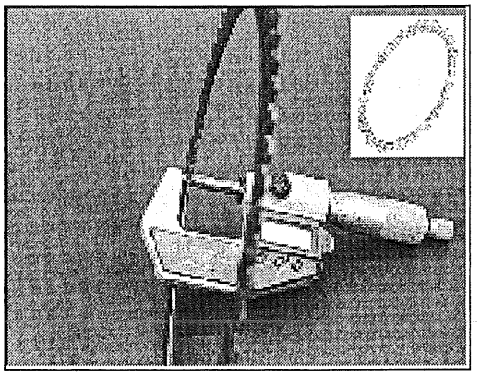

Friction Plate Thickness Minimum): 2.00 mm (0.078")

12. Inspect pressure plate for cracks, scoring, or wear on friction surface.

13. Inspect lifter retaining ring groove (H) for cracks or chips. Replace pressure plate if it fails inspection.

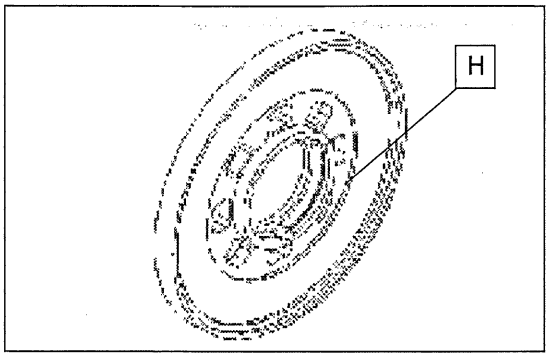

14. Inspect clutch diaphragm spring (I) for cracks or distortion.

15. Inspect inner and outer edges of spring carefully for unusual wear or damage. Outer edge should lay flat against a surface plate and inner tabs should be even in height (J).

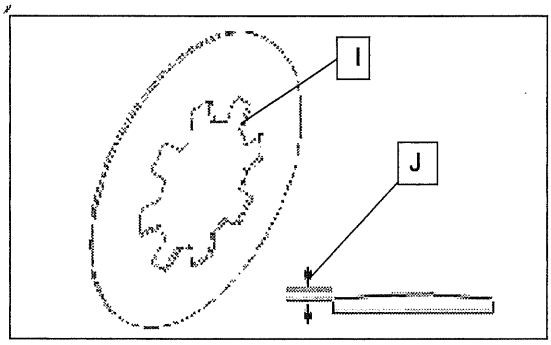

Clutch Release Rack and Bearing

NOTE
Clutch rack is serviceable as an assembly only.

16. Inspect clutch rack for broken or damaged teeth.

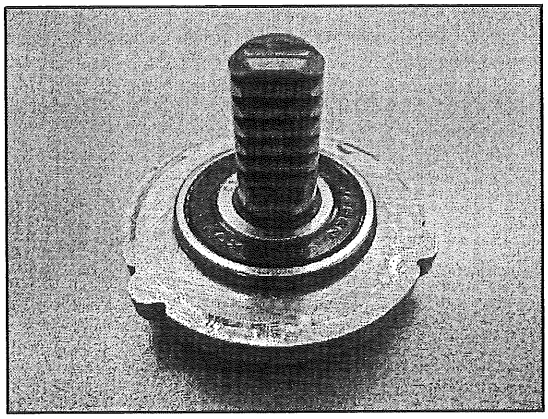

17. Inspect lifter bearing visually for any signs or wear or discoloration. Rotate bearing inner race with your finger and check for smooth movement and no play.
18. Replace clutch rack assembly if necessary.

CLUTCH ASSEMBLY

1. Refer to exploded views on Clutch Assembly View & Torque, page 9.16. Apply engine oil to judder spring seat (A) and spring (B).

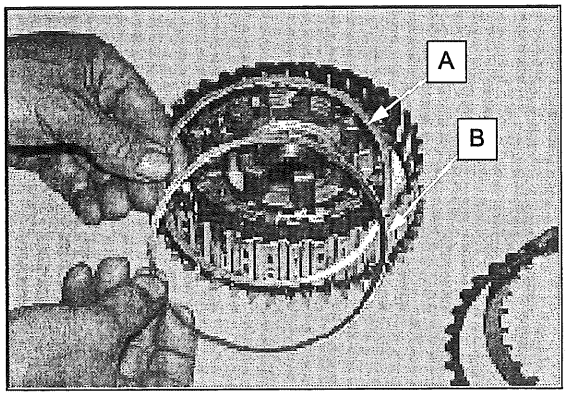

2. Install judder spring seat (flat ring), then judder spring.

NOTE

Judder spring must be installed with concave side facing UP (toward outside of clutch). The tallest edge of spring will be outermost.

3. Apply engine oil to judder friction plate and install.

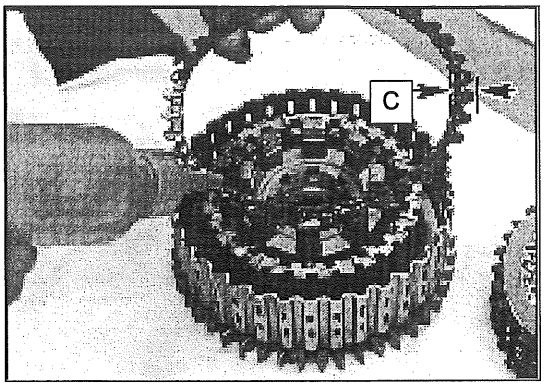

NOTE

This plate has a thinner profile (C) than the rest of the friction plates.
Feel the edge of steel plates and friction plates with your finger. One side of plate is machined at the edges and the other side is a rolled edge (rounded). Install steel plates with machined edge facing UP. Install friction plates with rolled edge facing UP.

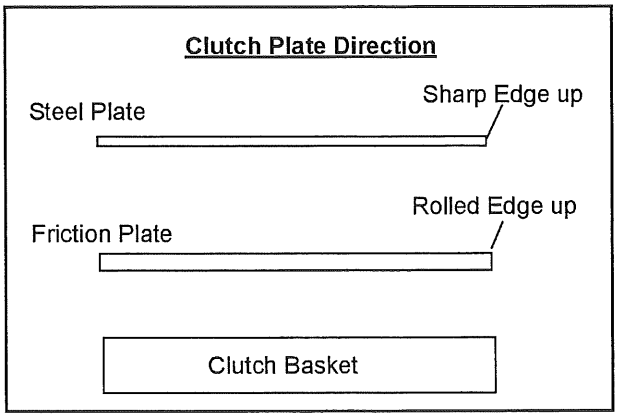

4. Place an oiled steel plate into clutch basket with machined edge UP.

NOTE

If friction plates are new, soak them in clean engine oil for a few minutes before installing.

9

5. Continue stacking oiled clutch plates into clutch basket alternating friction and steel plates until all are installed, ending with the special friction plate.

NOTE

Be sure to install special friction plate last (against pressure plate). As noted in Disassembly, the friction material on this plate has wider pads than the other (8) common friction plates. See illustrations on Clutch Assembly View & Torque, page 9.16 and photo below.

6. Install clutch pressure plate on top of clutch packing.

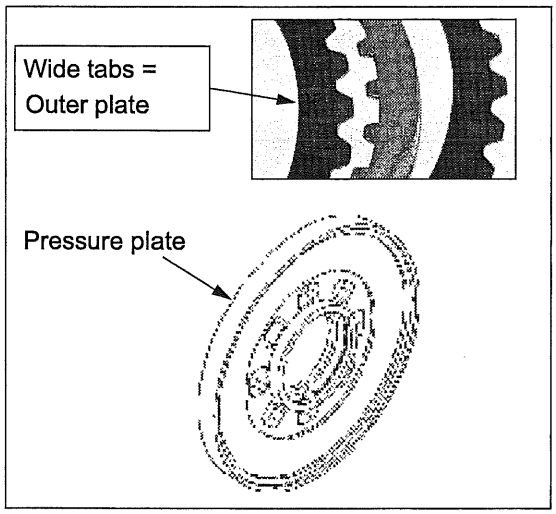

7. Install clutch diaphragm spring (D) with concave side down on top of pressure plate.

8. Place retaining ring seat (E) and retaining ring over clutch assembly before installing clutch spring compressor tool. Flange on inner edge of seat faces UP as shown.

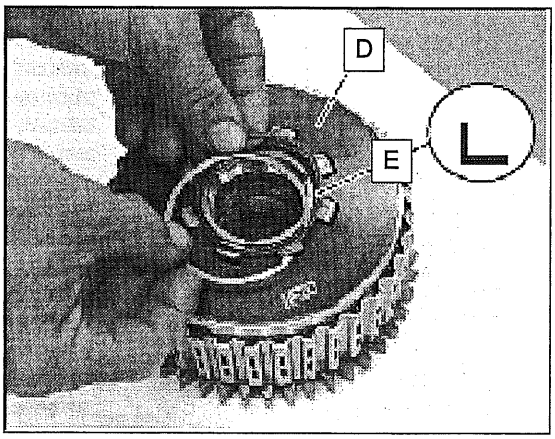

CAUTION

Tool will be under spring pressure.
WEAR EYE PROTECTION.

9. Install compressor tool and compress spring so ring seat can be positioned and retaining ring installed.

Special Tool: Clutch Spring Compressor
PV-45032

10. Install retaining ring with machined (sharp) edge up. Position retaining ring so one end of retainer is located on one of the posts (F).

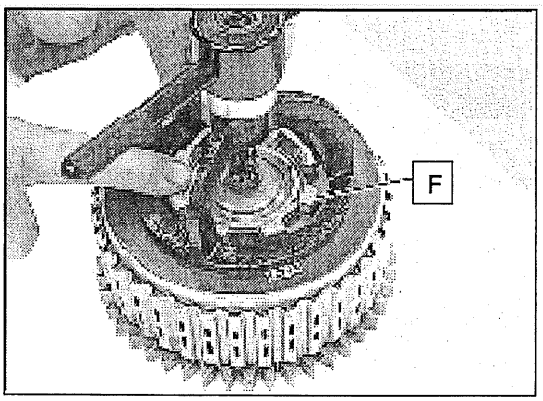

11. After retaining ring is installed, slowly release pressure from tool and guide flange into position under the retaining ring.

12. Remove spring compressor tool. Inspect retaining ring to be sure it is fully expanded and seated.

CLUTCH INSTALLATION

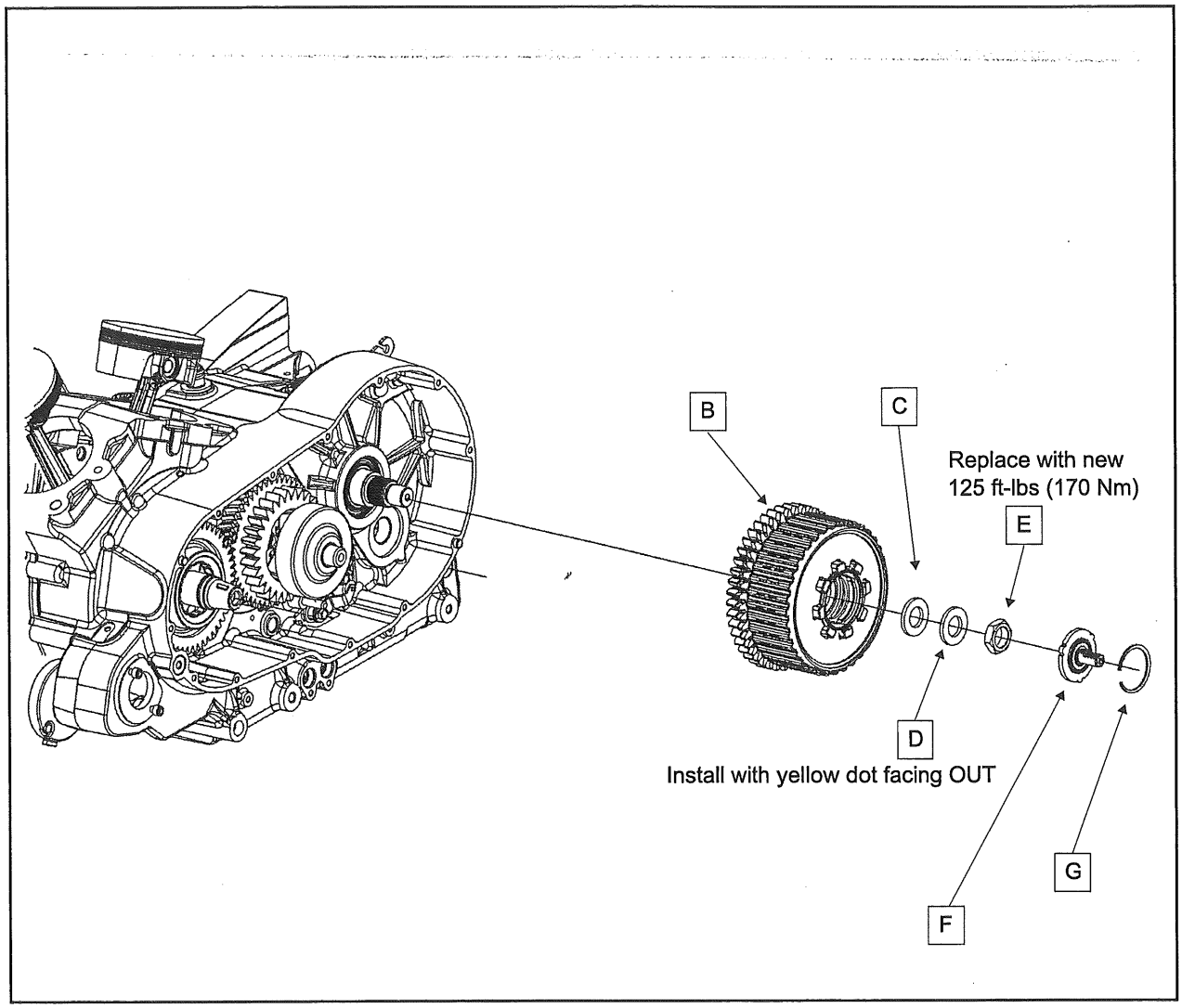

1. Pry back split gear (B) to align teeth and push clutch assembly onto clutch shaft until gear is fully engaged with torque compensator gear.
2. Clean clutch shaft threads with Loctite™ Primer N to remove all grease, oil, or old locking agent.
3. Install washer (C), a new spring washer (D) and a new stake nut (E). Install spring washer with yellow dot facing OUT. See Stake Nut Installation, page 10.37 for stake nut installation.
4. Install lock tool under split gear or lock crankshaft as shown on Locking The Crankshaft, page 9.15. Torque nut to specification.

TORQUE
Clutch Stake Nut: **125 ft-lbs (170 Nm)**

Engine lock tool PV-43502-A

5. Install clutch lifter assembly (F) and retaining ring (G). Be sure retaining ring is seated in groove.
6. Install primary cover.
7. Check engine oil and fill to proper level.

PRIMARY DRIVE

ASSEMBLY VIEW - PRIMARY DRIVE

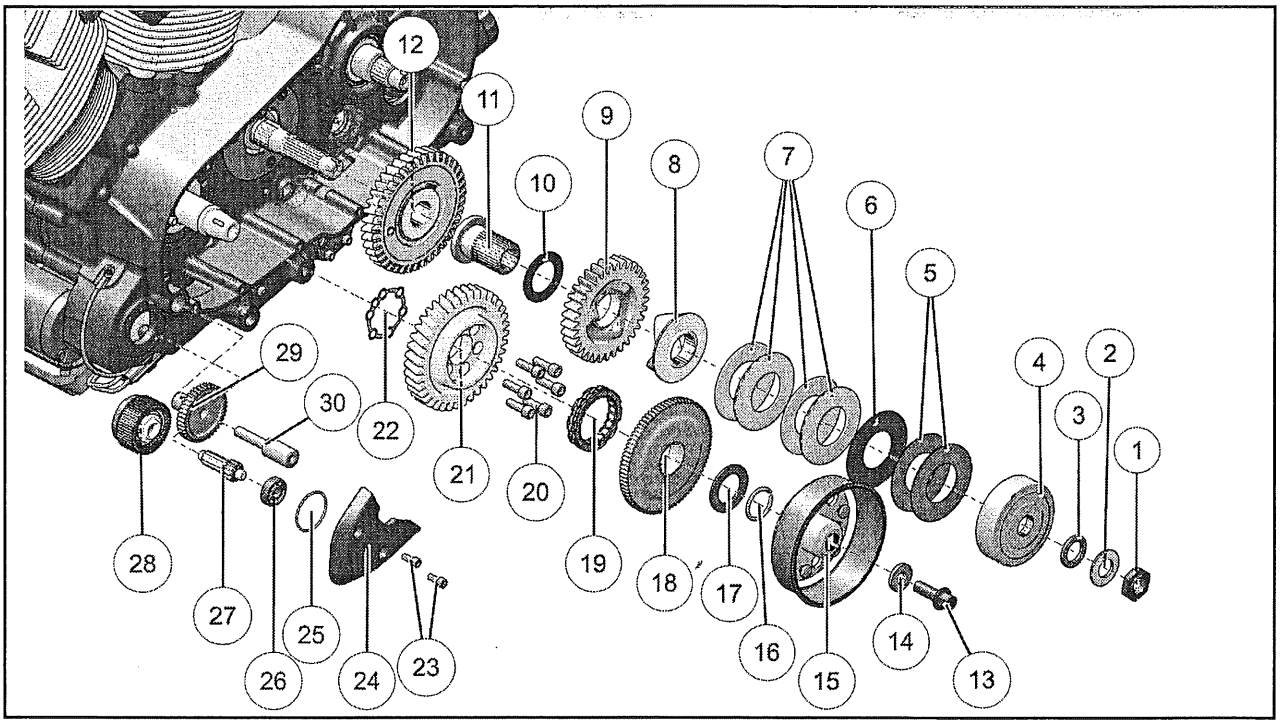

NUMBER	PART DESCRIPTION	TORQUE (IF APPLICABLE)
①	Stake Nut (Single Use)	125 ft-lbs (170 Nm)
②	Spring Washer	–
③	Flat Washer	–
④	Retainer, Compensator	–
⑤	Compensator Spring, 0.9 mm (Late MY12 - MY14 only)	–
⑥	Spacer (Late MY12 - MY14 only)	–
⑦	Compensator Spring, 2.54 mm	–
⑧	Slider, Compensator	–
⑨	Compensator, Drive Gear	–
⑩	Washer	–
⑪	Shaft, Compensator	–
⑫	Assembly, Split Gear	–
⑬	Bolt, Rotor	75 ft-lbs (102.0 Nm)
⑭	Washer, Rotor	–
⑮	Rotor	–
⑯	Snap-Ring, External	–
⑰	Washer, Starter Idler Gear	–
⑱	Gear, Starter	–
⑲	Drive Clutch, Starter	–
⑳	Bolt, Primary Gear (Single Use)	30 ft-lbs (41.0 Nm)
㉑	Gear, Primary	–
㉒	Diamond-Coated Spacer (Limited MY14–MY15)*	–
㉓	Screw, Bearing Cap	88.5 in-lbs (10.0 Nm)
㉔	Cap, Bearing	–
㉕	O-Ring	–
㉖	Bearing	–
㉗	Gear, Starter Drive (11T)	–
㉘	Clutch, Torque Limit (57T)	–
㉙	Idler Gear, Starter Drive	–
㉚	Shaft, Idler	–

*The Diamond-Coated Spacer will only be found on a limited number of engines manufactured on and between 01/22/2014 and 04/25/2014. If the Diamond-Coated Spacer must be removed to perform a specific service operation, it is critical that it is reinstalled upon assembly.

TORQUE COMPENSATOR REMOVAL

See Torque Compensator Assembly View as outlined in Assembly View and Torque. If split gear removal is required, see Split Gear Removal, after compensator is removed.

1. Remove primary cover (see Primary Cover Removal).
2. Lock the engine to prevent rotation with the lock tool or lock the crankshaft as described in Locking the Crankshaft.

Engine Lock Tool
PV-43502-A

3. Remove torque compensator stake nut and discard.
4. Remove retainer plate and Belleville springs.

9

5. Note orientation of washers (concave edges of washers face each other) for installation.

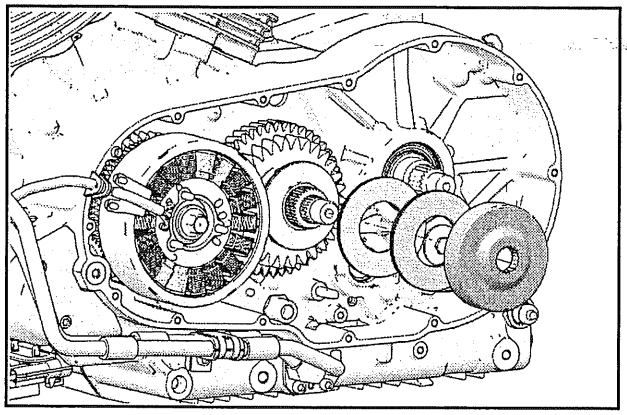

6. **If working on a late build type compensator** (see ASSEMBLY VIEWS / TORQUE VALUES, page for identification), collect the spacer off of the balance shaft, beneath the retainer plate.
7. Remove outer ramp.

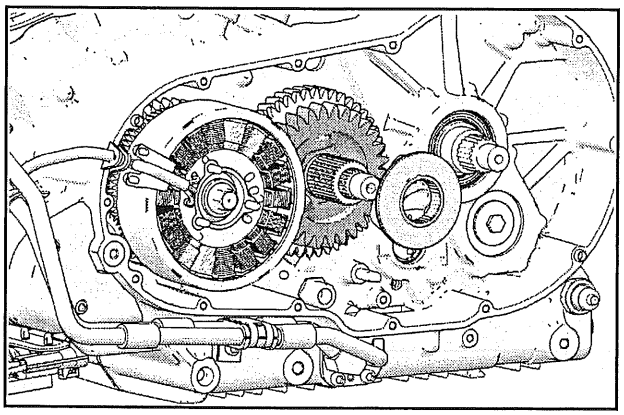

8. Remove compensator sleeve, washer and gear as an assembly.

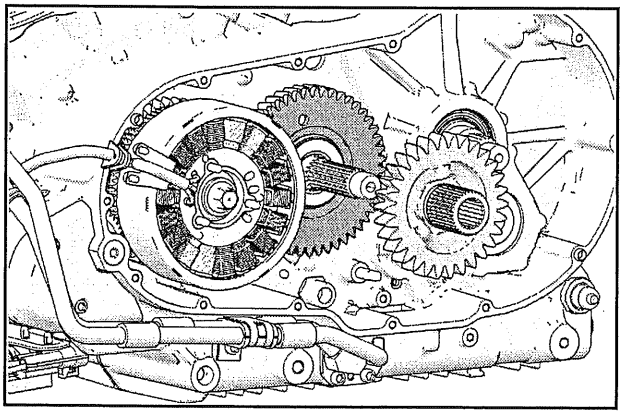

TORQUE COMPENSATOR INSPECTION (EARLY BUILD)

1. Inspect all parts for excessive galling or damage.

NOTE
Some polishing will be evident between the compensator gear and the compensator slider and is a normal condition. Replace assembly if ramps are worn.

2. Measure free length of torque compensator spring stack.

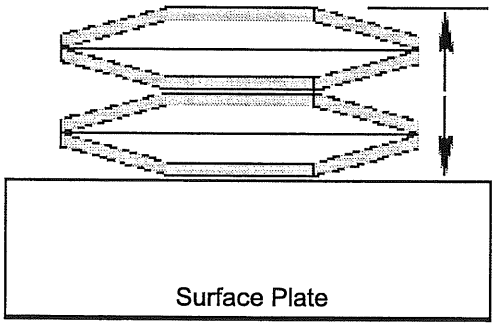

MEASUREMENT
Compensator Spring Stack Height **17.68-18.08mm (0.696 - 0.712")**

TORQUE COMPENSATOR INSPECTION (LATE BUILD)

1. Inspect all parts for excessive galling or damage.

NOTE

Some polishing will be evident between the compensator gear and the compensator slider and is a normal condition. Replace assembly if ramps are worn.

2. Measure free length of torque compensator spring stack.

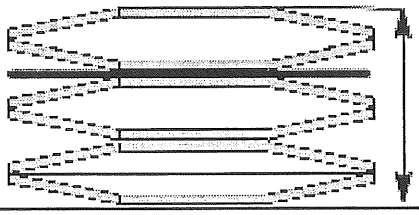

Surface Plate

MEASUREMENT

Compensator Spring Stack Height:
22.67mm (0.893")

TORQUE COMPENSATOR INSTALLATION

NOTE

Make sure that the driven split gear is fully engaged with the drive (crankshaft) gear before proceeding.

1. Assemble the torque compensator sleeve ①, washer ② and gear ③ as shown.

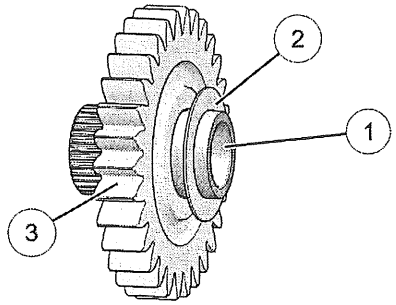

2. Apply Moly Assembly Paste 2871460 to shaft splines, sleeve, washer and back side of gear.

Moly Assembly Paste:
2871460

3. Slide torque compensator gear assembly ④ onto balance shaft ⑤ and seat it firmly against split gear ⑥.

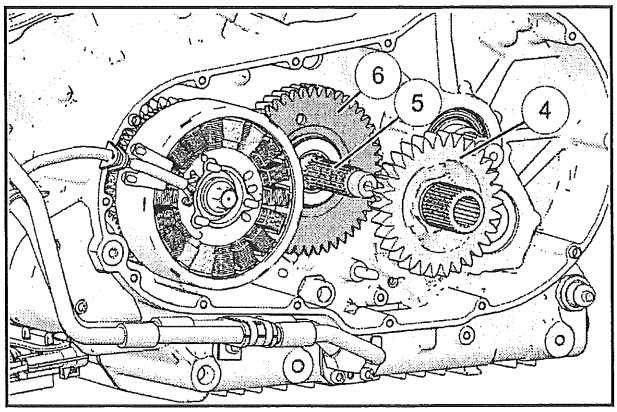

9

4. Grease the peaks and valleys gear ⑦ , sliding ramp, and splines of sleeve ⑧ .

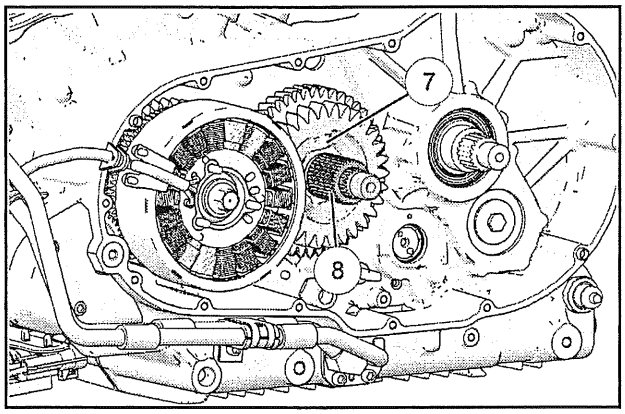

5. Install sliding ramp ⑨ .

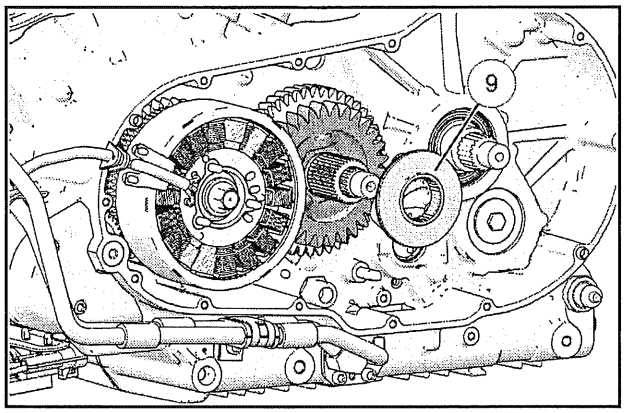

6. **If working on a late build type compensator** (see Assembly View — Primary Drive for identification), place the spring retainer spacer on the end of the balance shaft.

7. Grease edges of springs and retainer plate. Illustration below shows correctly assembled springs (Early Build), with concave edge facing each other. The assembled sets of spring washers are stacked back to back.

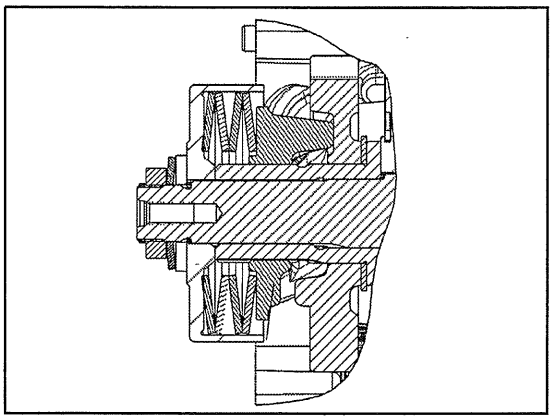

8. Install retainer plate and Belleville spring assembly, pushing it onto splines as far as possible.
9. **Clean balance shaft threads thoroughly** to remove all old locking agent, oil, or grease.
10. **Early Build** (shown below)- Install the flat washer ⑩ , Belleville washer ⑪ and a new stake nut ⑫ .
11. **Late Build** - Install the Belleville washer and a new stake nut.

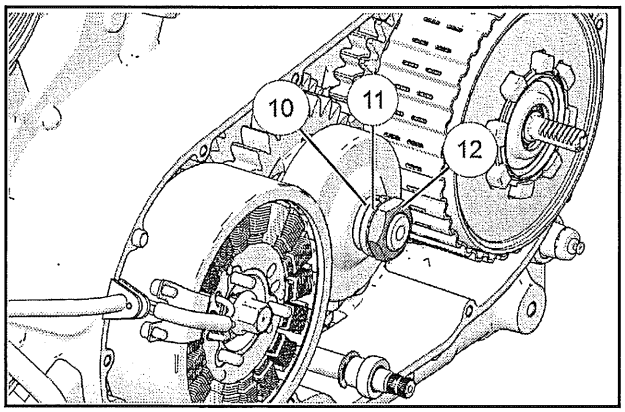

12. Hold shaft by inserting lock tool or pin the crankshaft. Torque nut to specification.

Engine Lock Tool
PV-43502-A

TORQUE
Compensator Nut:
125 ft-lbs (170 Nm)

13. Install primary cover. See Primary Cover Installation, page 9.13.
14. Fill engine oil to proper level.

ROTOR (FLYWHEEL) REMOVAL

1. Remove primary cover (see Primary Cover Removal) and rotor retaining bolt (counterclockwise). Lock the engine to prevent rotation with the lock tool, or lock the crankshaft as described in Locking the Crankshaft..

Engine Lock Tool
PV-43502-A

CAUTION
Use caution when removing nut and keep hands and body clear in case tool slips off gear.

2. Remove lock tool.
3. Cover crankcase cavity under rotor with a clean shop towel to prevent parts from falling into case.

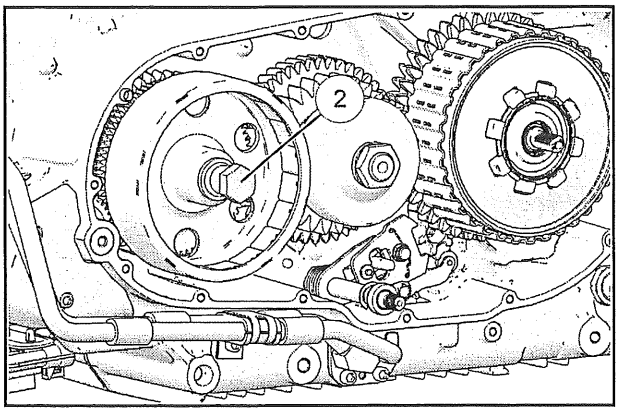

4. Install puller ②. Install lock tool on bottom of gear and rotate puller clockwise to remove rotor.

Rotor Puller
PV-43533

5. Remove rotor and key.

ROTOR (FLYWHEEL) INSTALLATION

1. Clean taper of rotor and crankshaft thoroughly.
2. Install key in key way on crankshaft.
3. Align rotor key-way and install rotor on crankshaft.

Engine Lock Tool
PV-43502-A

4. Position the lock tool as for rotor removal or lock the crankshaft as described in Locking The Crankshaft, page 9.15.
5. Install washer & bolt ①. Torque to specification.

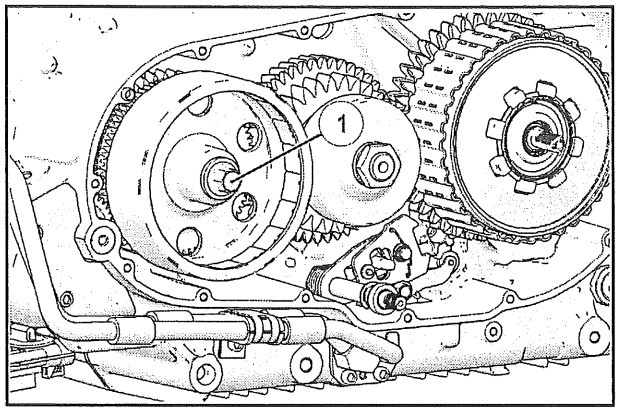

TORQUE
Rotor Nut:
75 ft-lb (102 Nm)

9

SPLIT GEAR REMOVAL

1. Remove primary cover (see Primary Cover Removal, page 9.10).
2. Remove rotor (see Rotor (Flywheel) Removal, page 9.29).
3. Remove clutch assembly (see Clutch Removal, page 9.17).
4. Remove torque compensator (see Torque Compensator Removal, page 9.25).
5. Remove starter gear retaining ring ① with a flat-billed external ring pliers. Remove any burrs from crankshaft ring groove before removing starter gear, or starter gear bushing may be damaged when gear is removed.

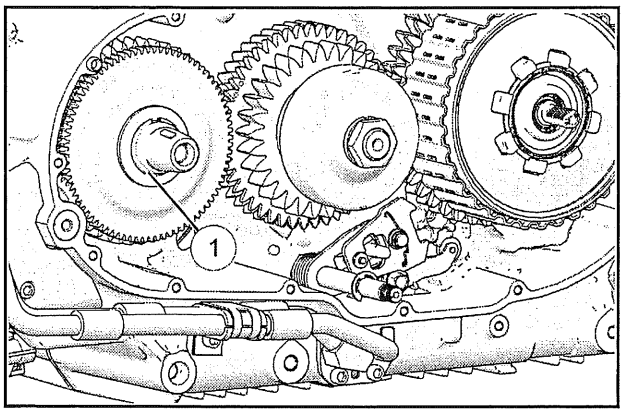

6. Temporarily install rotor to rotate engine until key is pointing up, and timing marks on split gear are aligned with mark on crankshaft gear.
7. Insert a 1/4" pin punch in gear alignment hole ② to relieve spring pressure on gear teeth.

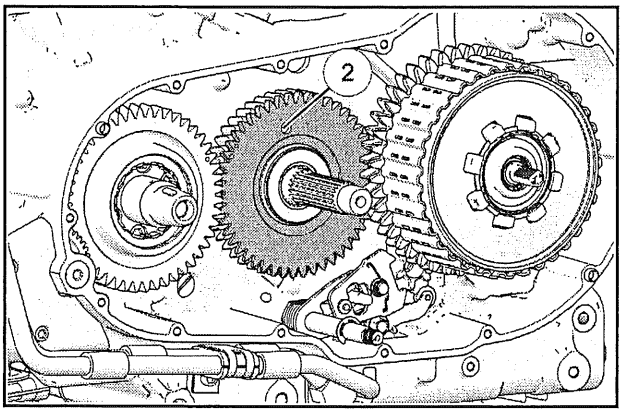

8. Pull split gear off balancer shaft.

SPLIT GEAR INSPECTION

1. Remove retaining ring ③ from split gear hub and separate outer gear from inner gear. Visually inspect contact surfaces of gears, springs, spring channels, and gear teeth.

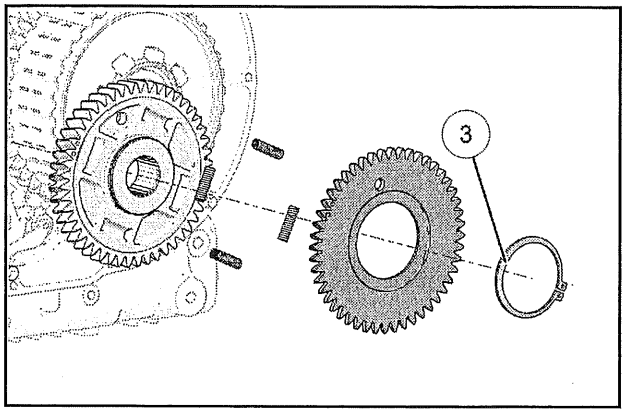

NOTE

Some normal polishing may be evident in the spring channels of gears. Replace the gear assembly if wear is evident.

2. After assembly, outer gear must rotate and return freely without binding on inner gear.

SPLIT GEAR INSTALLATION

1. Rotate balance shaft until "boss" spline ① (double wide spline) is at 12:00 o'clock position.

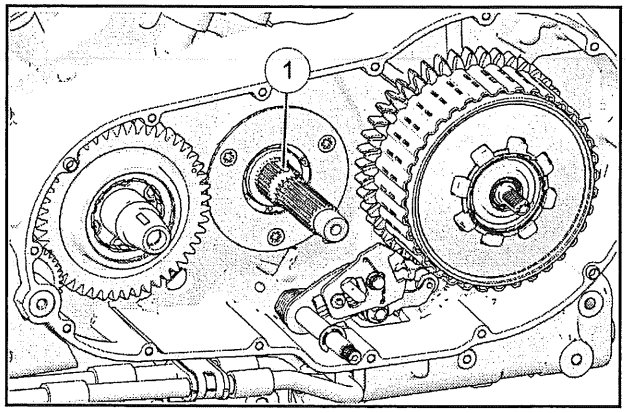

2. Apply grease to balance shaft and back of split gear assembly.
3. Line up teeth of split gear assembly with 1/4" straight pin in hole ② . Leave pin in place.

4. Do not allow pin to protrude out the back of the split gear assembly.

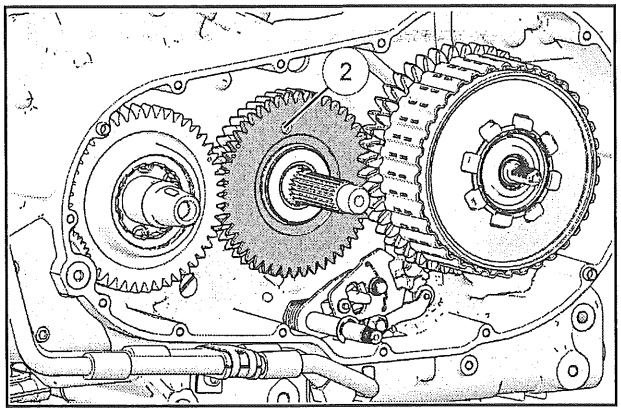

5. Place split gear on balance shaft with alignment dots at the 9:00 o'clock position.
6. Align "boss" splines of balance shaft and split gear while engaging crankshaft gear with split gear. Dot on crankshaft gear ③ must be between the 2 dots on balance gear ④.

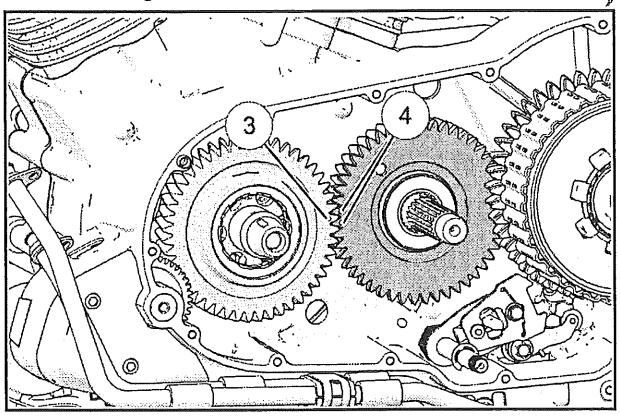

7. Push split gear inward until fully seated and flush with crankshaft gear. Verify proper balance shaft timing.
8. Install torque compensator, starter gear, rotor, clutch, and primary cover.

9

STARTER DRIVE

STARTER DRIVE REMOVAL

NOTE

The starter gear and primary drive (crankshaft) gear must be removed before the starter idler gear or starter torque limiter clutch and shaft can be removed from crankcase.

1. Remove primary cover (Primary Cover Removal, page 9.10).
2. Remove rotor (Rotor (Flywheel) Removal, page 9.29).

   Rotor Puller PV-43534
3. Place a shop towel in the crankcase cavity.
4. Remove starter gear retaining ring (A) with a flat-billed external ring pliers. Remove any burrs from crankshaft ring groove before removing starter gear, or starter gear bushing may be damaged when gear is removed.

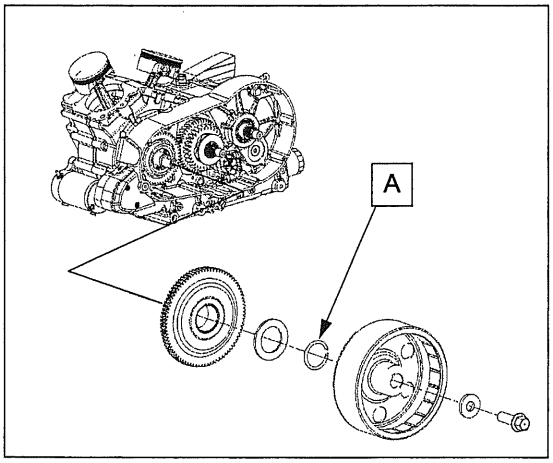

5. Remove flat washer and gear.

STARTER GEAR INSPECTION

1. Inspect gear teeth for chips, cracks or excessive wear.

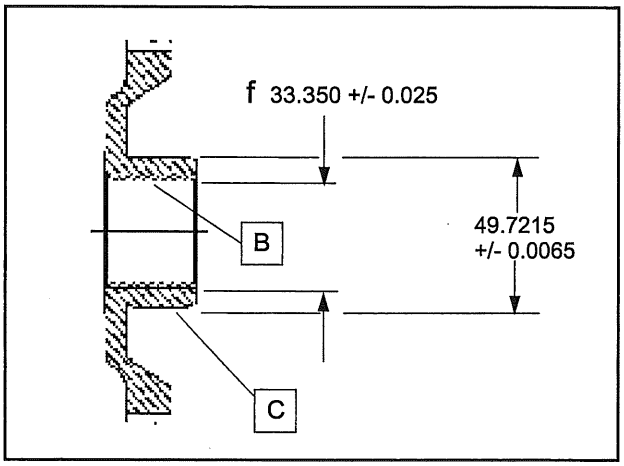

2. Inspect bushing (B) for excessive wear and scoring.
3. Inspect one-way clutch hub (C) for wear, scoring or rough surface.
4. Measure I.D. of bushing and O.D. of one-way clutch hub and compare to specification.
5. Replace gear if wear or damage is evident.

STARTER CLUTCH REMOVAL / INSPECTION

1. Remove one-way clutch from primary drive gear.
2. Note direction of one-way clutch with flanged side (D) inward (toward engine) for reassembly.

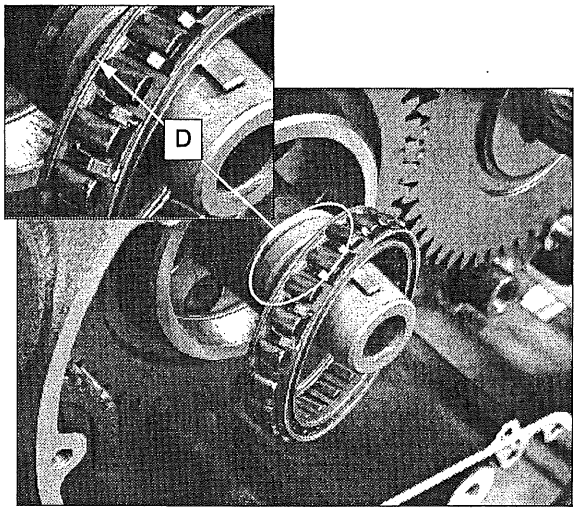

3. Inspect cage for cracks. Check band springs for tension and proper function.
4. Inspect clutch lobes for wear, galling, or rough surface.
5. See Starter Gear / Starter Clutch Installation, page 9.36.

PRIMARY DRIVE GEAR

PRIMARY DRIVE GEAR REMOVAL / INSPECTION

1. Install engine lock tool in position to hold crankshaft gear stationary while removing bolts.
2. Remove primary gear screws. Install new screws with pre-applied locking agent upon assembly.
3. Use a primary cover screw to pull idler gear shaft ①.

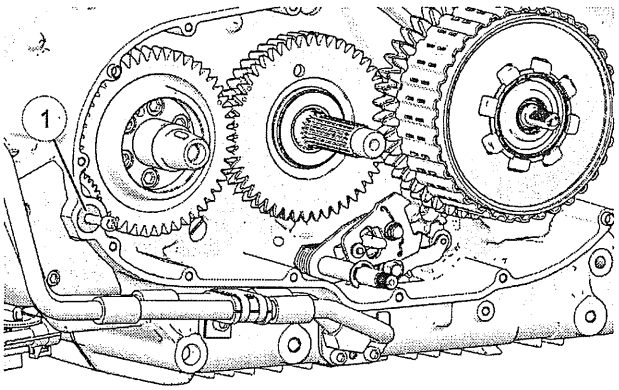

4. Pull primary drive gear off crankshaft.
5. Inspect the crankshaft thrust face and back of primary gear for diamond-coated spacer.
6. If applicable, remove diamond-coated spacer and store in a safe location until reassembly.

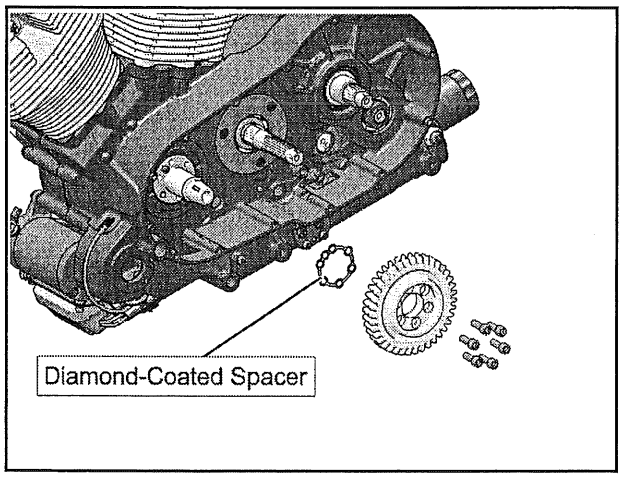

7. Remove idler gear from crankcase.
8. Inspect clutch hub surface ② inside primary drive gear for wear, scoring, nicks, or rough surface.

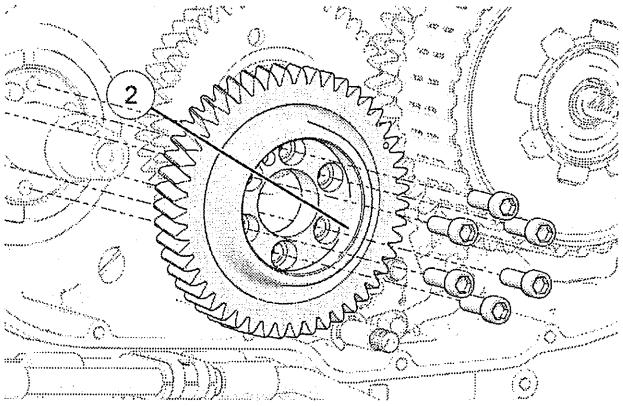

9. Inspect gear teeth on idler and primary drive gear for chips, cracks or excessive wear.
10. Remove starter drive cover.
11. Pull torque limiter clutch shaft out through cover opening with washer.

NOTE

Stepped side of washer faces out (toward gear) and flat side of washer is against limiter clutch (inset).

12. Remove torque limit clutch.

STARTER TORQUE LIMIT CLUTCH INSPECTION

1. Mount torque limit clutch in a soft jawed vise across entire gear face ①. Clamp only tight enough to prevent gear rotation.

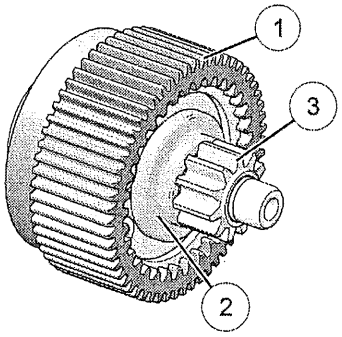

2. Install shaft *with spacer* ②.
3. Use a 19mm 12 point socket on gear ③.

4. Read torque at point of clutch slip.

TORQUE
Limit Clutch Break-Away Torque: **Standard: 35-45 ft-lbs (46-61 Nm)** **Service Limit: 30 ft-lbs (40 Nm)**

PRIMARY DRIVE GEAR INSTALLATION

1. Clean mating surfaces of crankshaft and gear.
2. For engines equipped with the diamond-coated spacer, verify the spacer is not torn / damaged and free from grease and oil.

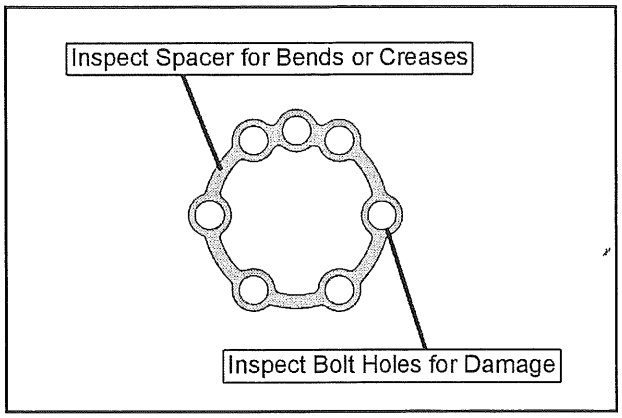

3. Clean screw threads in crankshaft to remove all locking agent, oil, and grease with Loctite™ Primer N and dry with low pressure air.

NOTE
Starter torque limit clutch ① and idler gear ② MUST be placed in the case before the primary drive gear is installed.

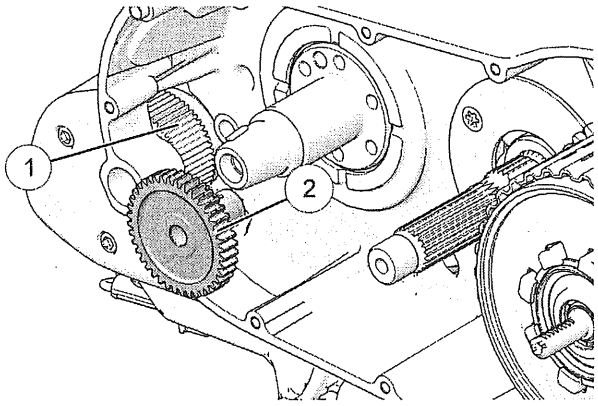

4. Place idler gear in crankcase but do not install shaft.

5. Temporarily install rotor to rotate engine until key is pointing UP. Remove rotor.
6. For engines equipped with the diamond-coated spacer, install spacer onto crankshaft and fit dowel through hole as shown.

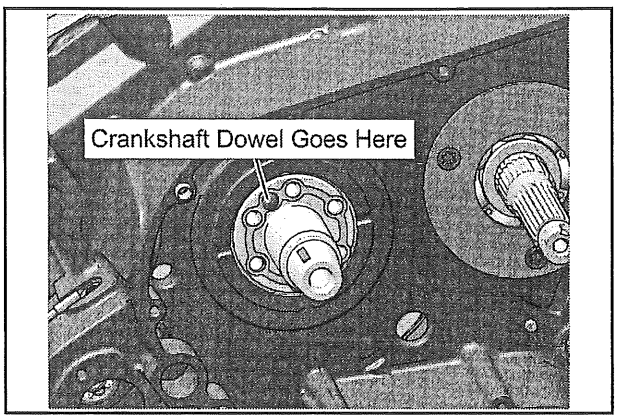

7. Carefully install primary gear on crankshaft being sure to engage all holes in the diamond-coated spacer (if applicable), and align dot on gear at the 3:00 position (90 degrees to the rear).

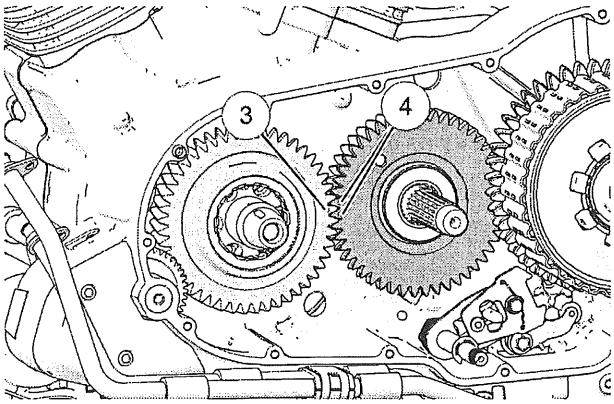

8. Engage teeth of primary gear ③ and split gear ④ , with dot on primary gear between two dots on split gear.
9. Place engine lock tool between bottom of inner split gear and crankcase.

9

10. Install drive gear ⑤ . If split gear is installed, rotate drive gear clockwise against spring pressure until split gear teeth align. Push gear in and rotate until pin on crankshaft aligns with hole on the back of drive gear. Primary and split gear teeth will be flush if fully seated.

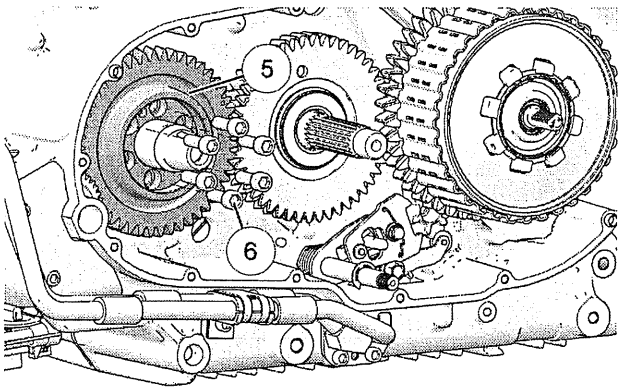

11. Install new primary drive gear screws ⑥ . These screws have a pre-applied locking agent. Always replace these screws if loosened or removed.
12. Install screws and torque in 2 steps following a star pattern to specification. Repeat final torque on all screws.

TORQUE
Primary Drive Gear Screws: **30 ft-lb (41 Nm)**

13. Install idler gear and shaft ⑦ .

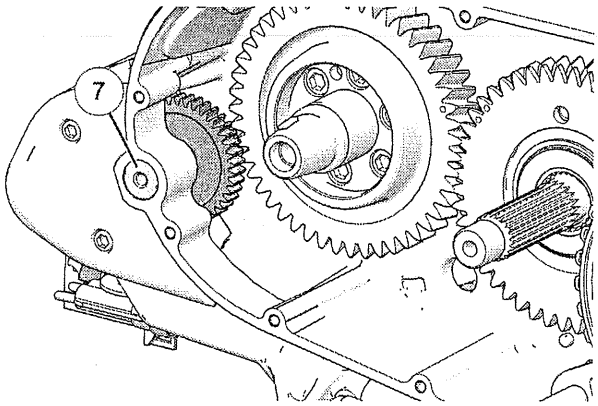

14. Install starter clutch and gear (Starter Gear / Starter Clutch Installation, page 9.36).

STARTER GEAR / STARTER CLUTCH INSTALLATION

1. Install one-way clutch with raised edge ① inward (toward primary gear).

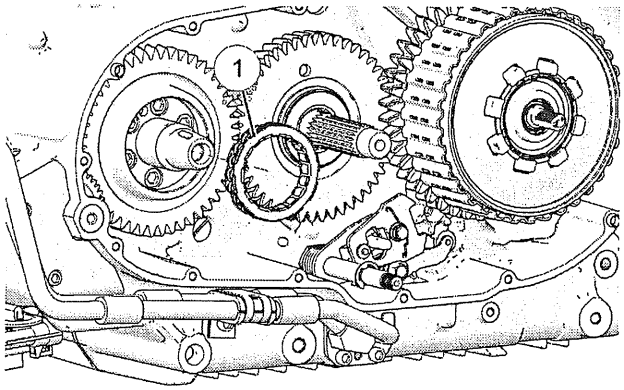

2. Install starter gear ② . When properly installed, the starter gear should rotate smoothly in a clockwise direction and lock to the primary gear when you attempt to rotate it counterclockwise.

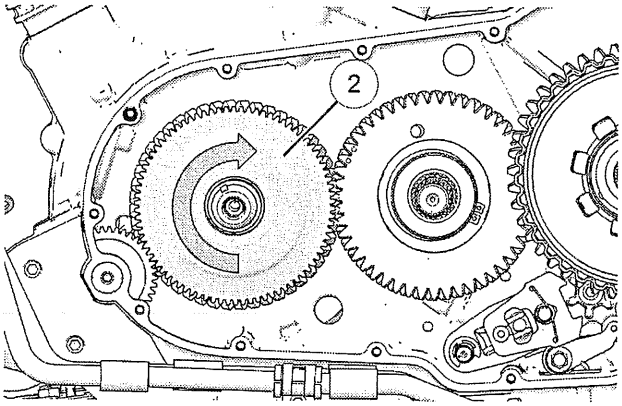

3. Install washer ③ .
4. Install retaining ring ④ .

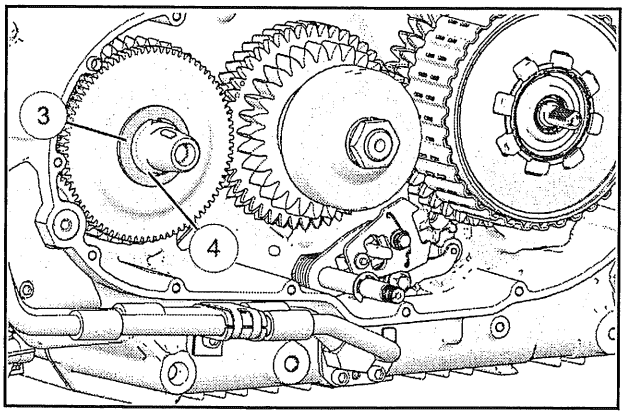

5. Install rotor (see Rotor (Flywheel) Installation).

6. Install primary cover (see Primary Cover Installation).
7. Check engine oil and fill to proper level.

TROUBLESHOOTING

Clutch Troubleshooting

PROBLEM	POSSIBLE CAUSE	PART(s) AFFECTED	REPAIR RECOMMENDED
Clutch Lever Pulls Excessively Hard	Clutch lever pivot, bushings, ferrules need lubrication.	Clutch lever pivot points	Lubricate
	Drive plates catching on primary driven gear basket	Clutch primary driven gear / clutch plates	Replace necessary parts
	Clutch lifter plate bearing damage	Clutch plate bearing lifter	Replace
	Damaged clutch lifter mechanism	Clutch release mechanism	Repair as necessary
Clutch Slips	Clutch spring weak	Clutch spring	Replace
	Clutch spring snap ring loose or broken	Clutch spring snap ring	Repair or replace as necessary
	Pressure plate worn, warped or distorted	Pressure plate	Replace
	Clutch plate(s) worn, warped or distorted	Driven plates or drive plates	Replace
	Clutch lifter mechanism sticking	Clutch lifter mechanism	Repair
	Engine oil level low	Oil level	Correct
	Oil additives present in oil or used previously	Oil quality	Replace oil & filter (clutch plates may need to be replaced)
Dragging Clutch (doesn't disengage completely, creeping, hard to find Neutral)	Clutch lever , pivot, cable, or lifter arm sticking	Lever, pivots, bushings, bearings, cable	Inspect
	Oil additives present in oil or used previously	Oil quality	Replace oil & filter (clutch plates may need to be replaced)
	Oil level too high	Oil level	Correct
	Oil viscosity too high	Oil quality	Replace oil & filter
	Pressure plate worn, warped or distorted	Pressure plate	Replace
	Clutch plate(s) worn, warped or distorted	Driven plates and/or drive plates	Replace
	Weak clutch spring	Clutch springs	Replace all

Transmission / Shift Troubleshooting

PROBLEM	POSSIBLE CAUSE	PART(s) AFFECTED	REPAIR RECOMMENDED
Transmission Will Not Shift	Broken shift drum	Shift drum	Replace shift drum
	Bent shift forks	Shift fork	Replace shift forks
	Worn shift drum	Shift drum	Replace shift drum
	Broken gears	Transmission gears	Replace broken gear(s)
	Damaged/broken bearings	Transmission, shift cam bearings	Replace bearings that fail inspection
	Worn gear shift pawl ratchet mechanism	Shift pawl mechanism	Replace parts that fail inspection
	Broken or dislodged shift shaft return spring	Shift shaft return spring	Repair or replace
	Roller detent arm stuck	Roller detent arm	Repair or replace parts
	Bent shift shaft (internal)	Shift shaft	Repair or replace
	External shift linkage binding or damaged	External shift linkage	Repair or replace
	Bent or distorted shift forks	Shift fork	Replace
	Bent or distorted shift fork rails	Shift fork rail	Replace
	Broken transmission components	Transmission components	Repair or replace
Transmission Hard to Shift	Improper clutch operation	Clutch	Inspect, repair
	Incorrect oil viscosity	Oil quality	Replace engine oil
	Incorrect clutch cable adjustment	-	Adjust
	Shift shaft damaged	Shift shaft components	Repair or replace
	Sticking pivot point, bent external shift linkage	External shift linkage	Repair or replace
	Bent or distorted shift forks	Shift forks	Replace
	Damaged shift drum grooves	Shift drum	Repair or replace
	Shift detent plunger stuck	Shift detent plunger	Repair or replace
	Bent/binding shift fork rails	Shift fork rails	Repair or replace
Transmission Jumps Out of Gear	Broken / loose stop pin	Shift stop pin	Replace
	Worn shift drum or shift drum ratchet	Shift drum or shift linkage	Replace
	Broken shift return spring	Shift return spring	Replace
	Damaged shift drum grooves	Shift drum	Replace
	Bent or worn shift forks	Shift forks	Replace
	Bent/binding shift fork rails	Shift fork rails	Replace
	Worn engagement dogs on transmission gears	Transmission gears	Replace
Transmission Noise	Drive belt tension incorrect	Drive belt	Adjust or replace
	Clutch plates bind or drag when clutch is disengaged	Clutch plates / hubs	Adjust / repair / replace
	Gear/bearing wear/damage	Transmission components	Inspect / replace

NOTES

CHAPTER 10
TRANSMISSION / CRANKSHAFT

GENERAL....10.3
SERVICE INFORMATION....10.3
CRANKCASE / CRANKSHAFT / CONNECTING ROD SPECIAL TOOLS....10.3
SPECIFICATIONS....10.4
DRIVE TRAIN....10.4
CONNECTING ROD AND CRANKSHAFT SPECIFICATIONS....10.4
ASSEMBLY VIEWS / TORQUE VALUES....10.6
ASSEMBLY VIEW - CRANKCASE....10.6
CRANKSHAFT / CONNECTING ROD / CRANKCASE TORQUE PATTERN....10.7
CRANKCASE BOLT LENGTH AND TORQUE PATTERN....10.8
ASSEMBLY VIEW - TRANSMISSION....10.9
ASSEMBLY VIEW - MAINSHAFT / CLUTCH SHAFT....10.10
ASSEMBLY VIEW - SHIFT DRUM AND SHIFT FORK....10.11
GEAR TRAIN....10.12
SERVICE PROCEDURES....10.13
CRANKCASE SEPARATION....10.13
2012 - 2015 TRANSMISSION INFORMATION....10.14
NSA (NEUTRAL SELECTION ASSIST) TRANSMISSION INFORMATION....10.15
NSA (NEUTRAL SELECTION ASSIST) TRANSMISSION COMPONENT REMOVAL....10.16
NSA (NEUTRAL SELECTION ASSIST) TRANSMISSION COMPONENT INSTALLATION....10.16
TRANSMISSION REMOVAL....10.17
CLUTCH SHAFT INSPECTION / REMOVAL....10.18
TRANSMISSION INSPECTION....10.19
CRANKSHAFT ENDPLAY MEASUREMENT....10.20
CRANKSHAFT REMOVAL....10.22
CONNECTING ROD SIDE CLEARANCE INSPECTION....10.23
CONNECTING ROD REMOVAL / IDENTIFICATION....10.23
CONNECTING ROD INSPECTION (BIG END)....10.24
CONNECTING ROD BEARING INSPECTION....10.25
CONNECTING ROD BEARING CLEARANCE INSPECTION (TYPICAL)....10.25
CONNECTING ROD BEARING SELECTION....10.26
CRANKSHAFT INSPECTION....10.26
CONNECTING ROD INSTALLATION....10.27
CRANKSHAFT CLEANING....10.28
MAIN BEARING INSPECTION....10.28
MAIN BEARING OIL CLEARANCE INSPECTION....10.28
LEFT CRANKCASE ASSEMBLY....10.29
RIGHT CRANKCASE ASSEMBLY....10.30
CRANKCASE REED VALVE ASSEMBLY REMOVAL & INSPECTION....10.30
CRANKSHAFT INSTALLATION....10.30
TRANSMISSION INSTALLATION....10.31
BALANCE SHAFT....10.32

BALANCE SHAFT REMOVAL & INSPECTION 10.32
BALANCE SHAFT INSTALLATION 10.32
CRANKCASE 10.33
CRANKCASE ASSEMBLY & SEALING 10.33
STAKE NUT INSTALLATION 10.37
TROUBLESHOOTING 10.38

GENERAL

SERVICE INFORMATION

- Remove engine from frame to service internal transmission and/or crankshaft components (see General, page 6.2)
- The crankcase must be separated to access internal transmission components and crankshaft. Remove:
- Cylinder heads
- Cylinders & pistons
- Gear shift linkage
- Primary cover and components (as required depending on needed access to other components)
- Regulator / Rectifier and Bracket
- Starter motor
- Label and store parts neatly to speed the assembly process and ensure that matched parts like connecting rods, camshaft carriers and bearings can be installed in their original location
- Crankshaft main bearing replacement requires line boring. This procedure requires full machine shop capabilities and specialized knowledge. It is recommended that a qualified machine shop perform this procedure if it becomes necessary or replace the crankcase assembly
- Crankshafts and connecting rods are color coded for manufacturing tolerances with a white or red paint mark (or stamped "R" or W"). See Connecting Rod Bearing Inspection, page 10.25
- All torque specifications are "dry" unless specified for oil or locking agent. Refer to exploded views
- When locking agents are required, use Loctite Primer N to clean fastener before applying locking agent Primer N reduces cure time of thread locking agent in addition to preparing the surfaces

CRANKCASE / CRANKSHAFT / CONNECTING ROD SPECIAL TOOLS

SPECIAL TOOL		PART NUMBER
Crankshaft Main Bearing Protector		PV-47207
Crankcase Separator	MY11 Com-plete New Kit	PV-47332B
	All others	PV-47332A & PV-50371 (PV-50371 updates PV-47332A for MY11 engines)
Crankcase Assembly Tools	Base Tool	PV-45030
	Collar	PV-46299 (M36 x 1.50 thread for use with PV-45030
Assembly Adapter		PVX-47429 (for use with PV-45030)
Drive Sprocket Seal Installer		PV-43505A
Clutch Shaft Installation Tool		PV-47331

10

SPECIFICATIONS

DRIVE TRAIN

ITEM		SPECIFICATIONS
Drive Train (General)	Transmission	6 Speed (Overdrive)
	Primary Reduction Ratio	1.48: 1
	Final Reduction Ratio	2.12: 1
Drive Train (Gear Ratios)	Gear Ratio: 1st Gear	3.13: 1
	Gear Ratio: 2nd Gear	2.02: 1
	Gear Ratio: 3rd Gear	1.50: 1
	Gear Ratio: 4th Gear	1.20: 1
	Gear Ratio: 5th Gear	1.00: 1
	Gear Ratio: 6th Gear (Overdrive)	0.87: 1

CONNECTING ROD AND CRANKSHAFT SPECIFICATIONS

PART	PART SPECIFIC	STANDARD	SERVICE LIMIT
Connecting Rod	Connecting Rod to Crankshaft Side Clearance	0.22 - 0.42 mm (0.0087 - 0.0165")	0.65 mm (0.025")
	Connecting Rod Bearing to Crankshaft Oil Clearance	0.0254 - 0.0635 mm (0.001 - 0.0025")	0.11 mm (0.0043")
	Connecting Rod Small End I.D.	22.01 - 22.02 mm (0.8665 - 0.8670")	22.09 mm (0.8694")
	Connecting Rod Width	20.28 - 20.34 mm (0.798 - 0.801")	20.03 mm (0.788")
	Connecting Rod Big End I.D. (White)	50.84 - 50.85 mm (2.0016 - 2.0020")	50.89 mm (2.0031")
	Connecting Rod Big End I.D. (Red)	50.85 - 50.86 mm (2.0019 - 2.0024")	50.89 mm (2.0034")
Crankshaft Main Bearing / Rod Journals	Connecting Rod Journal Width	40.00 - 40.58 mm (1.5748 - 1.5976")	41.35 mm (1.627")
	Crankshaft Rod Journal O.D. (White)	47.970 - 47.978 mm (1.888 - 1.889")	47.94 mm (1.8871")
	Crankshaft Rod Journal O.D. (Red)	47.978 - 47.986 mm (1.8888 - 1.8891")	47.95 mm (1.8875")
	Main Bearing Oil Clearance	Left 0.013 - 0.060 mm (0.0005 - 0.0023") Right .014 - .061mm (0.0005 - 0.0024")	0.10 mm (0.004") 0.10 mm (0.004")
	Left Main Bearing Journal O.D.	64.952 - 64.973 mm (2.5571 - 2.5579")	64.93 mm (2.556")
	Right Main Bearing Journal O. D.	59.952 - 59.973 mm (2.3603 - 2.3611")	59.93 mm (2.359")
	Crankshaft End Play	.05 - .30 mm (0.0019 - 0.0118")	-

PART	PART SPECIFIC	STANDARD	SERVICE LIMIT
Balance Shaft	Journal O.D., Left (Primary Side) Journal O.D., Right (Oil Pump Drive Side)	29.980 - 29.992 mm 29.969 - 29.979 mm	-
Transmission			
Shift Fork	Shift Fork I.D. (Dimension A, Assembly View - Shift Drum and Shift Fork, page 10.11)	12.00 - 12.026 mm (0.4725 - 0.4732")	12.05 mm (0.4744")
	Shift Fork Pin O.D. (Dimension B, Assembly View - Shift Drum and Shift Fork, page 10.11)	6.036 - 6.136 mm (0.2376 - 0.2416")	6.02 mm (0.2370")
	Shift Fork Width (Dimension C1 & C2, Assembly View - Shift Drum and Shift Fork, page 10.11)	C1 5.70 - 5.90 mm (0.2244 - 0.2322") C2 5.10 - 5.30 mm (0.2007 -0.2086")	C1 5.65 MM C2 5.05 MM
Shift Fork Rail	Shift Fork Rail O.D. (Dimension C, Assembly View - Shift Drum and Shift Fork, page 10.11)	11.948 - 11.972 mm (0.4704 - 0.4713")	11.92 mm (0.4693")
	Shift Fork Rail Runout	-	.025 mm (0.001")
Shift Drum	Shift Drum Groove	-	Replace drum if any wear is evident

ASSEMBLY VIEWS / TORQUE VALUES

ASSEMBLY VIEW - CRANKCASE

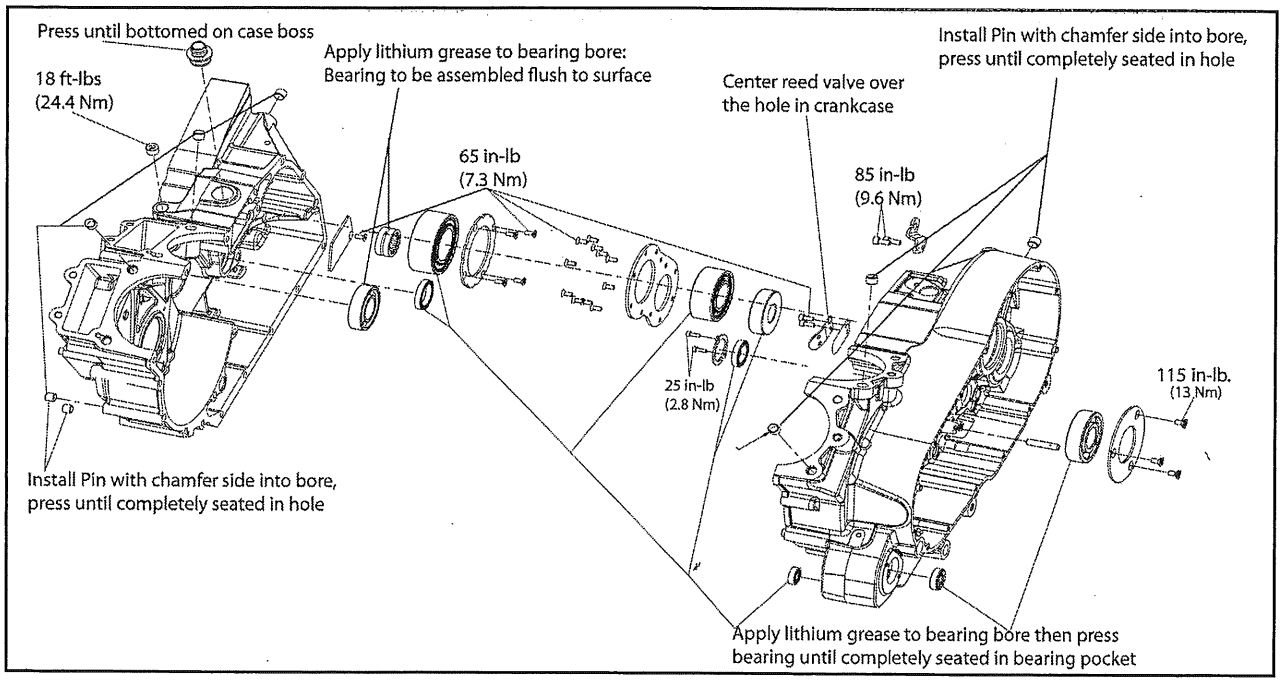

CRANKSHAFT / CONNECTING ROD / CRANKCASE TORQUE PATTERN

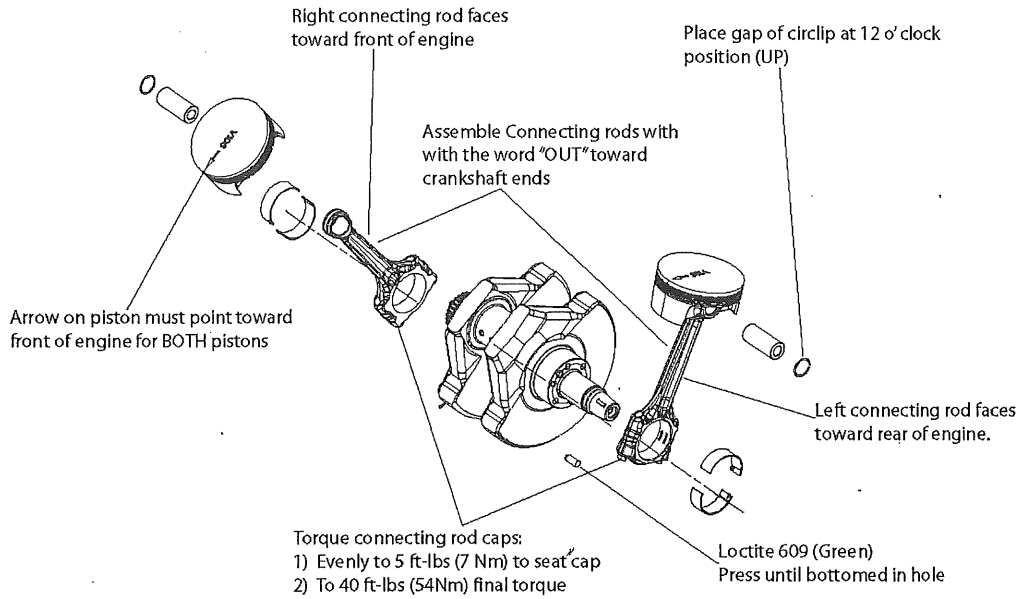

See Page 10.18 for bearing color codes, size chart, and paint numbers

10

CRANKCASE BOLT LENGTH AND TORQUE PATTERN

Crankcase Bolt Torque: Torque bolts in order 1-14 (shown below) in two steps to 22 ft-lbs (30 Nm).

Repeat 22 ft-lbs (30 Nm) torque.

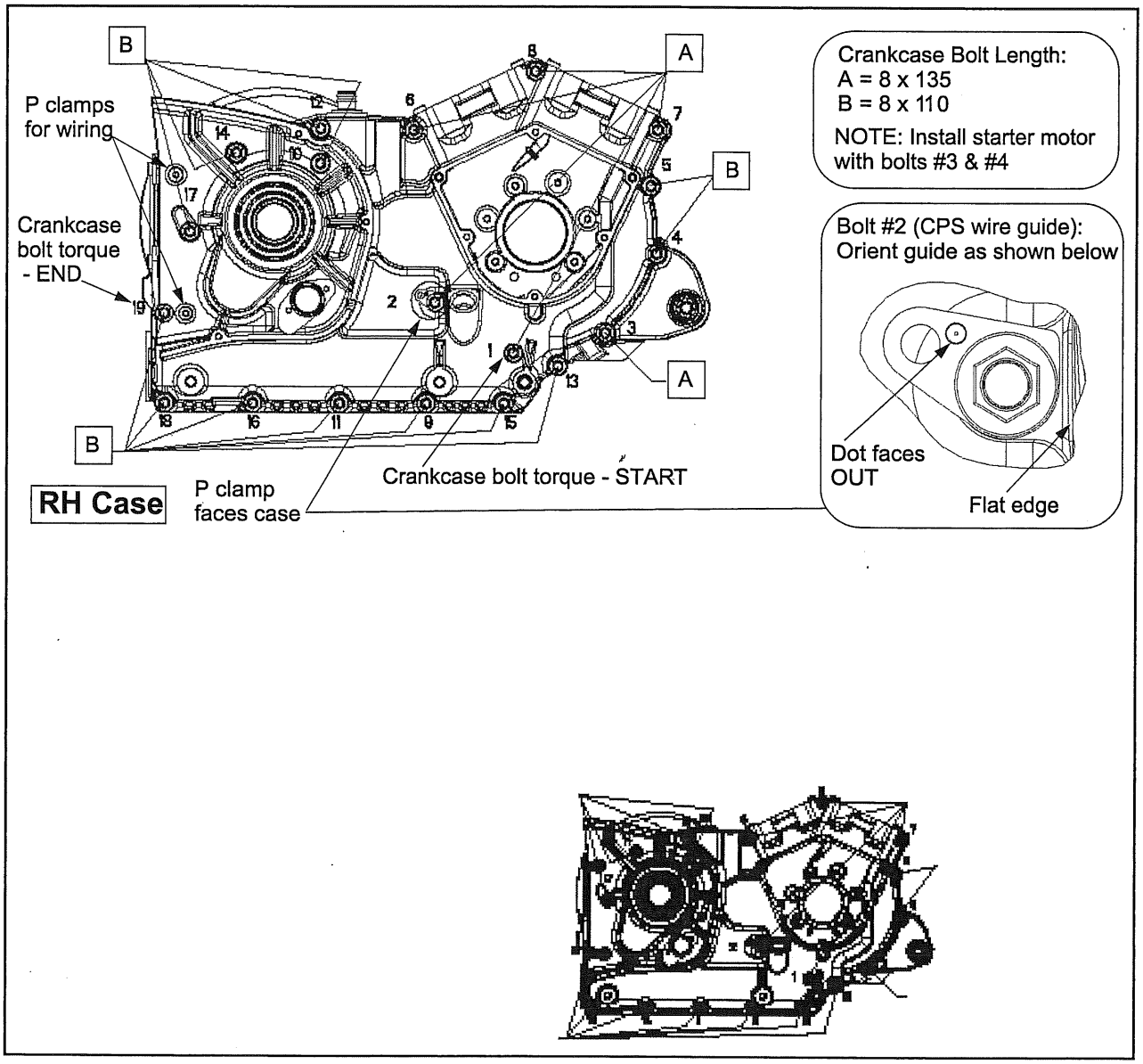

ASSEMBLY VIEW - TRANSMISSION

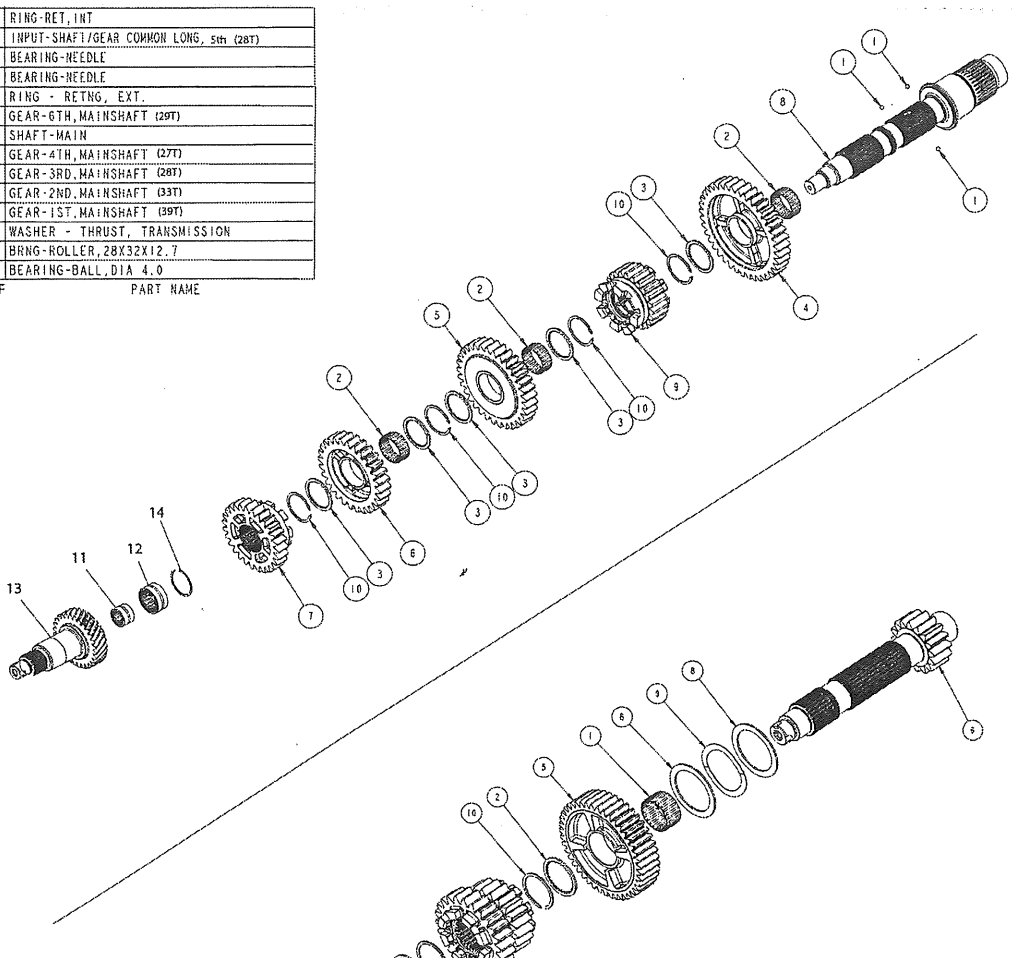

Mainshaft/Clutchshaft

REF	PART NAME
14	RING-RET,INT
13	INPUT-SHAFT/GEAR COMMON LONG, 5th (28T)
12	BEARING-NEEDLE
11	BEARING-NEEDLE
10	RING - RETNG, EXT.
9	GEAR-6TH,MAINSHAFT (29T)
8	SHAFT-MAIN
7	GEAR-4TH,MAINSHAFT (27T)
6	GEAR-3RD,MAINSHAFT (28T)
5	GEAR-2ND,MAINSHAFT (33T)
4	GEAR-1ST,MAINSHAFT (39T)
3	WASHER - THRUST, TRANSMISSION
2	BRNG-ROLLER,28X32X12.7
1	BEARING-BALL,DIA 4.0

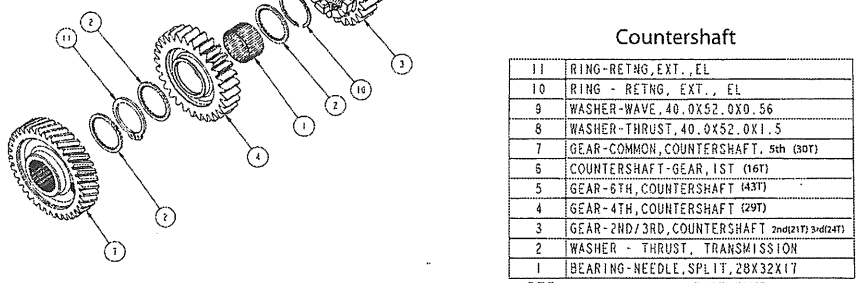

Countershaft

REF	PART NAME
11	RING-RETNG,EXT.,EL
10	RING - RETNG, EXT., EL
9	WASHER-WAVE,40.0X52.0X0.56
8	WASHER-THRUST,40.0X52.0X1.5
7	GEAR-COMMON,COUNTERSHAFT, 5th (30T)
6	COUNTERSHAFT-GEAR,1ST (16T)
5	GEAR-6TH,COUNTERSHAFT (43T)
4	GEAR-4TH,COUNTERSHAFT (29T)
3	GEAR-2ND/3RD,COUNTERSHAFT 2nd(21T) 3rd(24T)
2	WASHER - THRUST, TRANSMISSION
1	BEARING-NEEDLE,SPLIT,28X32X17

10

ASSEMBLY VIEW - MAINSHAFT / CLUTCH SHAFT

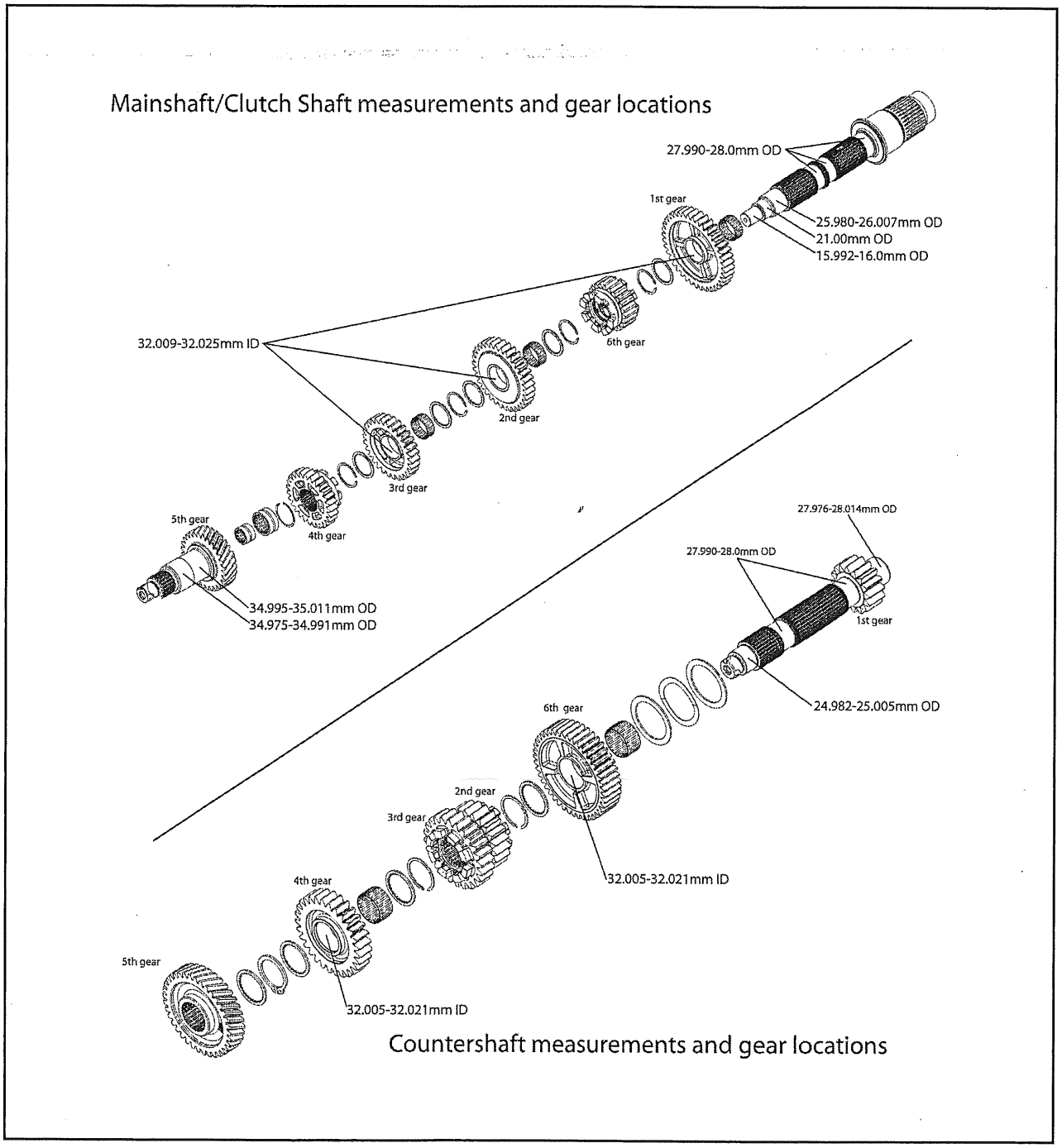

ASSEMBLY VIEW - SHIFT DRUM AND SHIFT FORK

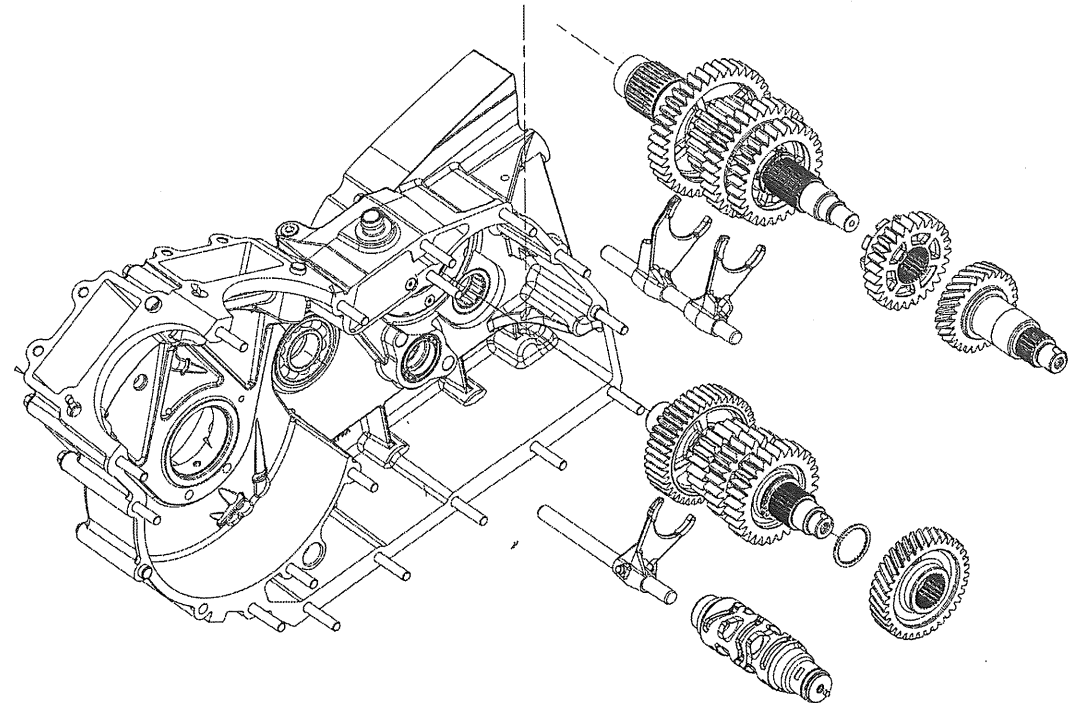

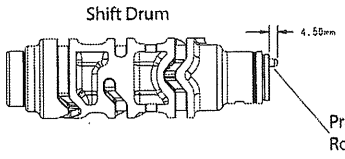

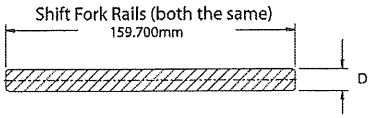

Dimensions in mm

A	12.000-12.026 id
B	6.036-6.136 od
C1	5.70-5.90
C2	5.10-5.30
D	11.948-11.972 od

Countershaft shift fork

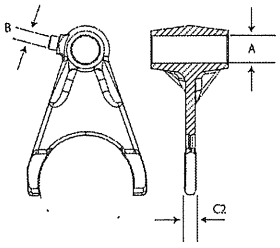

Mainshaft / Clutch shaft 4th gear shift fork

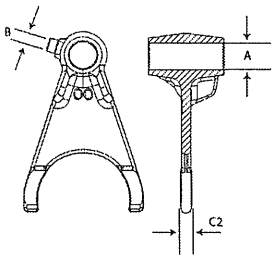

Mainshaft / Clutch shaft 6th gear shift fork

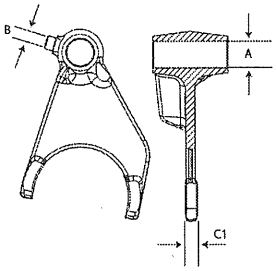

10

GEAR TRAIN

1st Gear

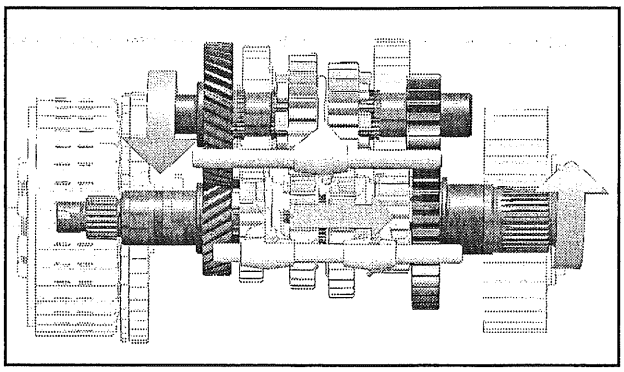

4th Gear

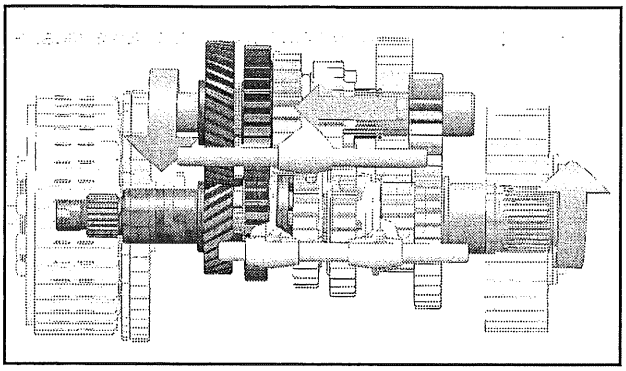

2nd Gear

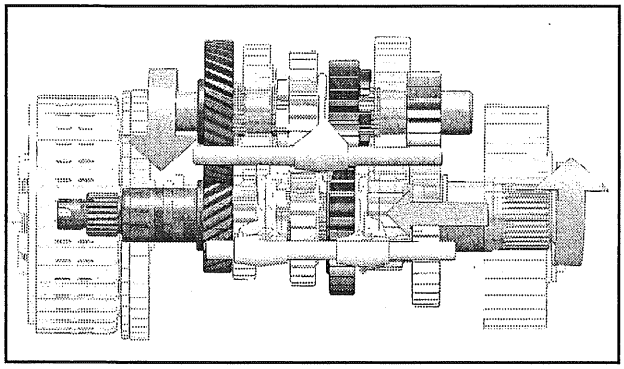

5th Gear

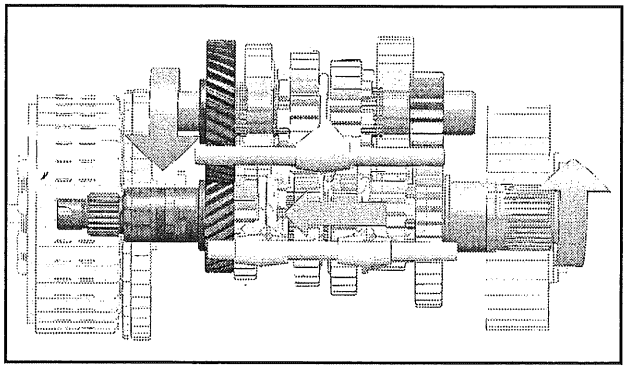

3rd Gear

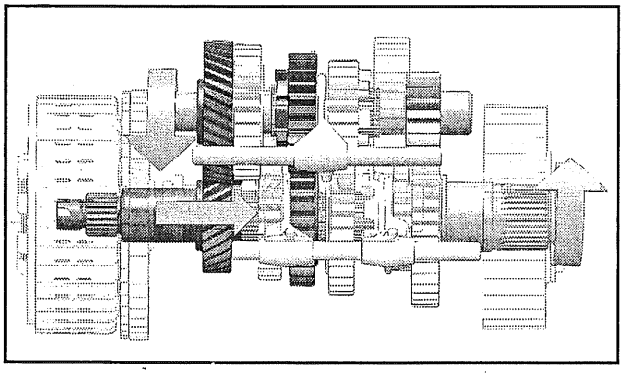

6th Gear

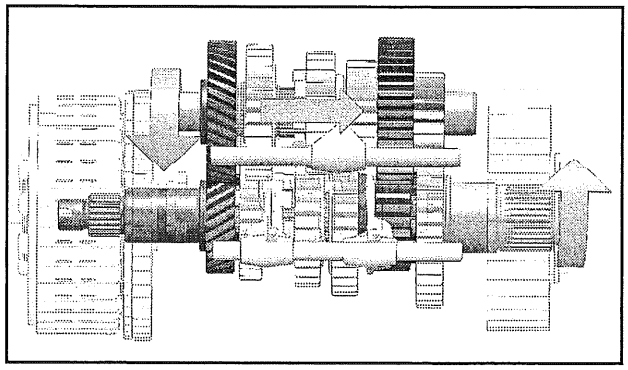

SERVICE PROCEDURES

CRANKCASE SEPARATION

1. Drain engine oil.
2. Remove drive sprocket (see Drive Sprocket and Seal Removal, page 11.7).
3. Remove regulator / rectifier to avoid damage.
4. Remove engine and mount securely on an engine stand (see General, page 6.2).
5. Remove primary cover (see Primary Cover Removal, page 9.10).
6. Remove cylinder heads (Cylinder Head Removal, page 7.13), cylinders and pistons (Cylinder Removal, page 8.5).
7. Remove shift ratchet, clutch, alt. rotor and starter gear (Shift Ratchet Removal & Inspection, page 9.11).

NOTE

For transmission service only, remove:

- Clutch
- Shift drum star
- Countershaft retaining nut (A). Use clutch shaft holder PV-45028 to prevent shaft rotation.

This allows transmission removal after cases are split.

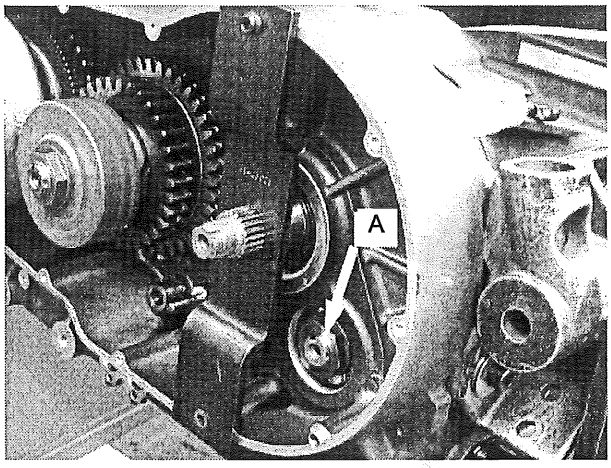

NOTE

For complete engine disassembly, refer to Clutch, Primary / Shift Chapter to remove:

- Flywheel
- Torque compensator
- Starter gear & one way clutch
- Primary drive gear
- Starter idler gear and shaft

8. Remove starter motor.
9. Loosen remaining crankcase bolts evenly and remove from case. Note the two different bolt lengths and the locations of each (Crankcase Bolt Length And Torque Pattern, page 10.8).
10. Install the crankshaft bearing protector over the cam chain drive gear on the crankshaft.

    Special Tool: Crankshaft Bearing Protector PV-47207

11. Install crankcase separator tool on crankcase over the main shaft and tighten screws. Tighten the center screw while tapping with a soft faced mallet.

    Special Tool: Crankcase Separator PV-47332B (MY11 new kit) or PV-47332A & PV-50371 (PV-50371 updates PV-47332A for MY11 and newer engines).

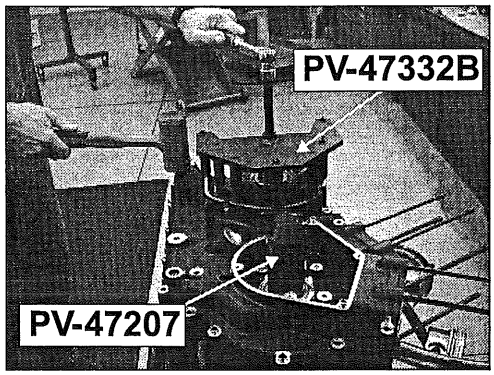

12. Lift crankcase off and remove bearing protector from cam chain drive sprocket.

NOTE

Components such as the crankshaft, oil pump, balance shaft, transmission and shift drum can be removed individually for service.

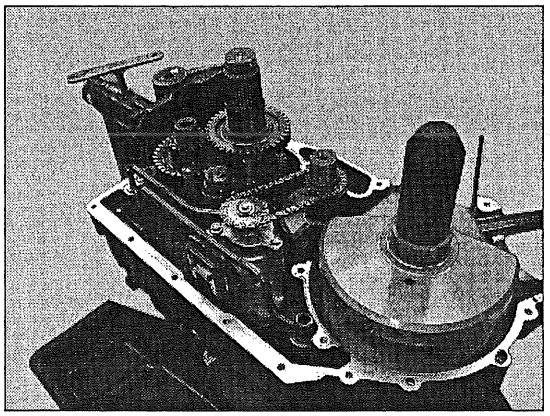

Refer to the following pages as required:

- Crankshaft Service: Crankshaft Removal, page 10.22
- Oil Pump Service: Oil Pump Removal, page 4.9
- Balance Shaft: Balance Shaft Removal & Inspection, page 10.32
- Shift Drum / Transmission: Transmission Removal, page 10.17

2012 - 2015 TRANSMISSION INFORMATION

- Before replacing any transmission component, it is important to determine which gear set has been used. Transmissions with back-cut gear dogs can be identified by locating the cut v-groove around the outer diameter of any gear.

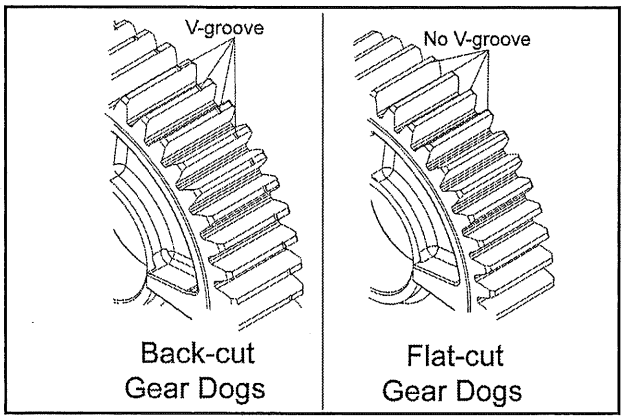

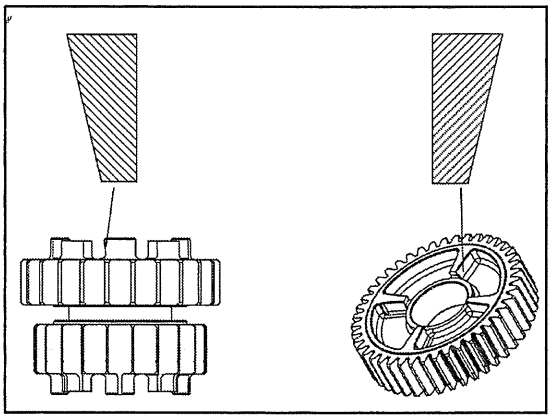

CAUTION

2012-2013 back-cut gears should not be used in conjunction with previous model year Victory transmission gears.

- Transmissions with back-cut gears do not require countershaft shimming upon reassembly.

NSA (NEUTRAL SELECTION ASSIST) TRANSMISSION INFORMATION

- The NSA system assists the operator by preventing the unwanted engagement of 2nd gear when trying to locate neutral with the gear shifter. This system also prevents shifting into second gear from a stop when the vehicle is not moving forward.

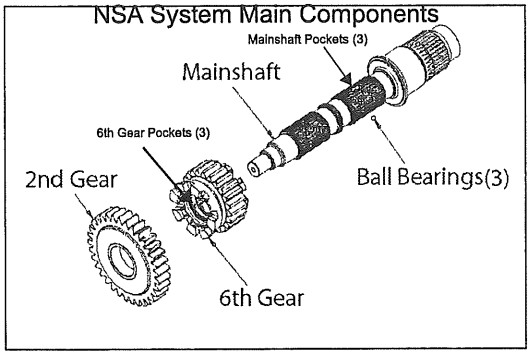

- When the transmission is in first gear or neutral, not rotating or rotating slowly, the ball bearings are seated into pockets in the mainshaft, preventing 6th gear from sliding on the mainshaft. As the transmission speed increases in first gear, centrifugal force pulls the three ball bearings into pockets in the 6th gear, thus allowing the shift fork to move the 6th gear to allow engagement into 2nd gear.

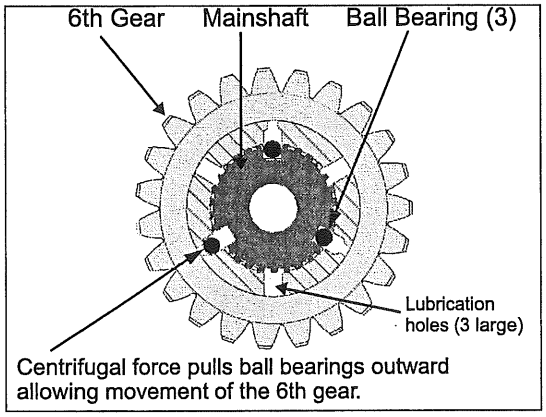

10

NSA (NEUTRAL SELECTION ASSIST) TRANSMISSION COMPONENT REMOVAL.

1. Remove mainshaft as outlined in this chapter and secure vertically.
2. Remove 4th, 3rd & 2nd gear along with all applicable retaining rings, thrust washers and needle bearings from the mainshaft.
3. All three ball bearings need to be seated outward in the 6th gear pockets for the 6th gear to slide up and off of the mainshaft. When the ball bearings are properly seated in the 6th gear for removal, they are visible through the hole in the gear. This can be accomplished by one of the following:

- Lift the 6th gear upward with a shift fork approx 3/8" & spin the mainshaft assembly so centrifugal force pulls all three of the ball bearings outward into the 6th gear pockets, then lift the gear upward off of the mainshaft.
- Abruptly tilt the main shaft at each 6th gear bearing pocket location until all three bearings are outward into the 6th gear pockets. Squirting Victory engine oil into the 6th gear pocket holes will aid getting the ball bearings to stay in the outward position.

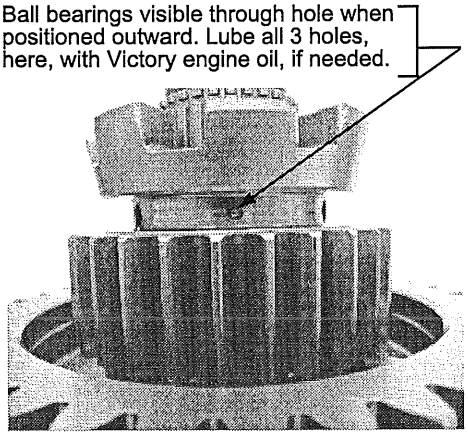

CAUTION

Only use Victory engine oil to lubricate transmission components. Using grease or other lubricants may cause incorrect operation of the NSA system.

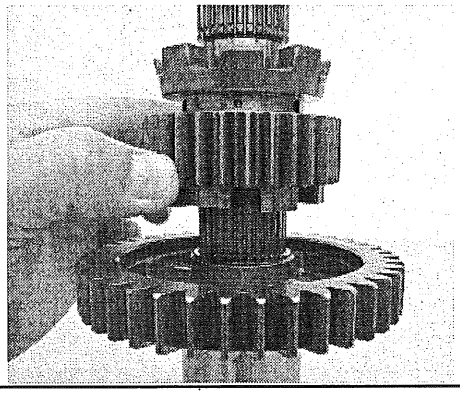

NSA (NEUTRAL SELECTION ASSIST) TRANSMISSION COMPONENT INSTALLATION.

1. To reinstall 6th gear onto the mainshaft, lubricate the inside 6th gear pockets and splines with Victory engine oil. Install the three ball bearings into the lubricated 6th gear bearing pockets.

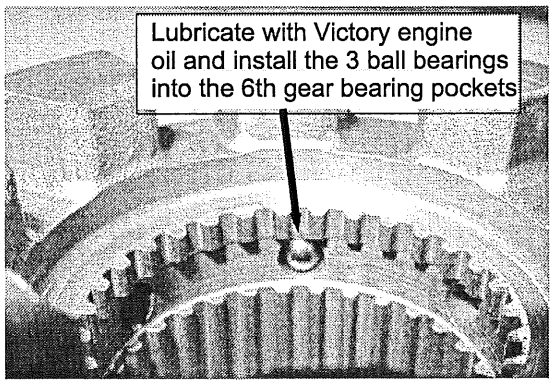

2. With the mainshaft secured vertically, rotate 6th gear so any one of the three bearing holes in the gear and the bearing pockets on the shaft are in alignment. Note the alignment notch on one spline of the mainshaft. Be sure the ball bearings do not fall out of the 6th gear pockets when positioning the gear onto the splines.

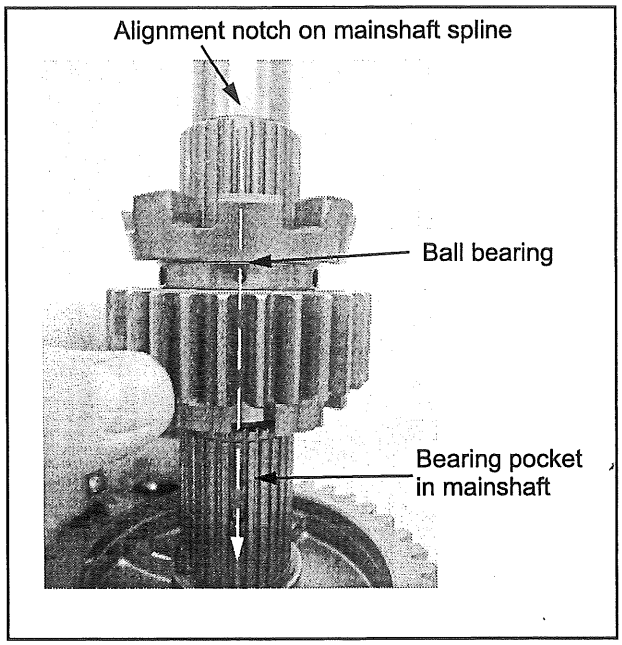

3. Slide 6th gear down onto the splines making sure that the pocket alignment is correct. If the ball bearings and mainshaft pockets do not line up, incorrect operation of the NSA system will result.

4. When 6th gear is fully installed, abruptly rock the mainshaft so the bearings move into the mainshaft pockets or use a small dowel to push the ball bearings into the mainshaft pockets. Check for proper NSA operation by trying to remove the 6th gear from the main shaft; the gear should not pull up and off of the mainshaft without performing steps 1-4 of the removal process.

5. If NSA operation is correct, reassemble mainshaft as outlined in this chapter.

CAUTION

Only use Victory engine oil to lubricate transmission components. Using grease or other lubricants may cause incorrect operation of the NSA system.

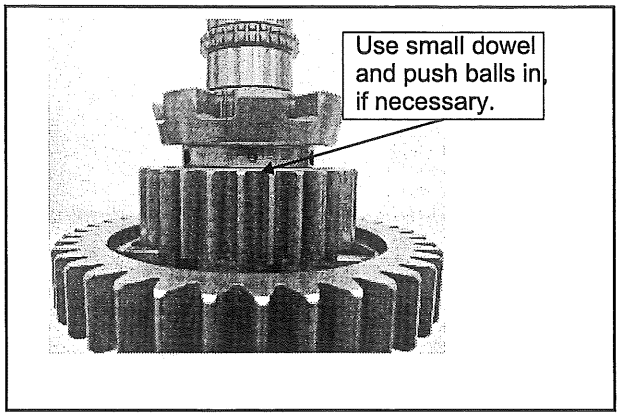

TRANSMISSION REMOVAL

1. If not removed previously, remove countershaft locating nut and washer (A). Use clutch shaft holder PV-45028 to prevent shaft rotation.

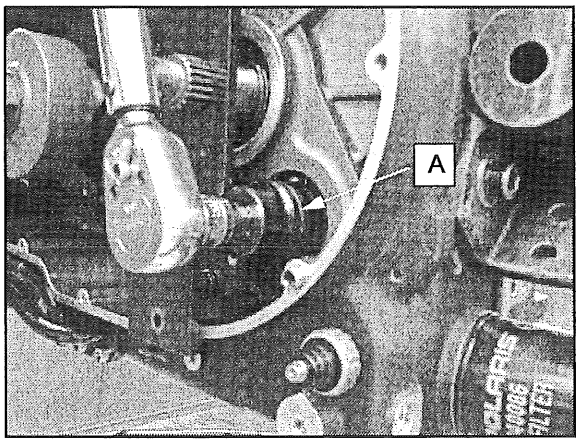

10

2. Remove shift drum star (B).

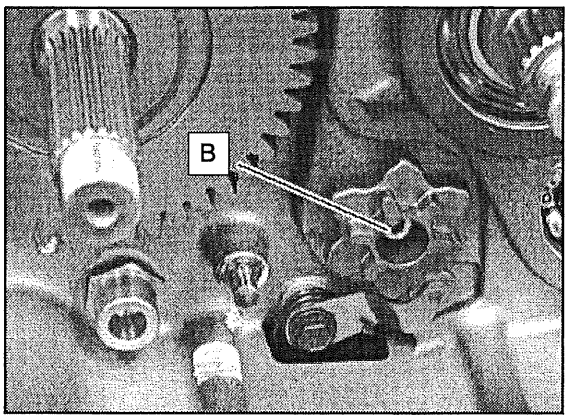

3. Remove shift fork shafts (C).
4. Disengage shift forks from grooves in the shift drum.

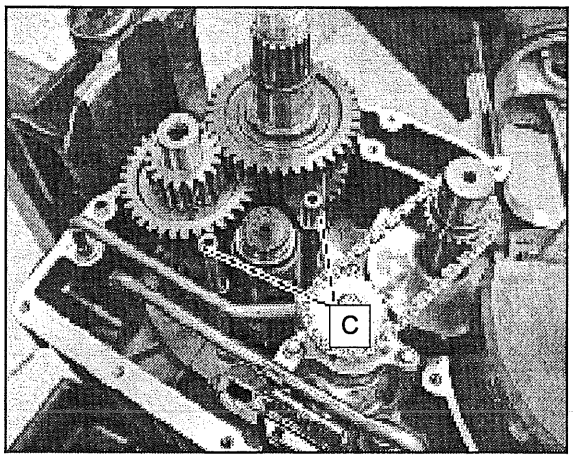

5. Remove shift forks, shift drum, mainshaft and countershaft from crankcase.
6. Carefully lift crankshaft out of left case.
7. Remove oil pump sprocket, chain, oil pipes and pump (see Oil Pump Removal , page 4.9).
8. Pull balance shaft from left case.

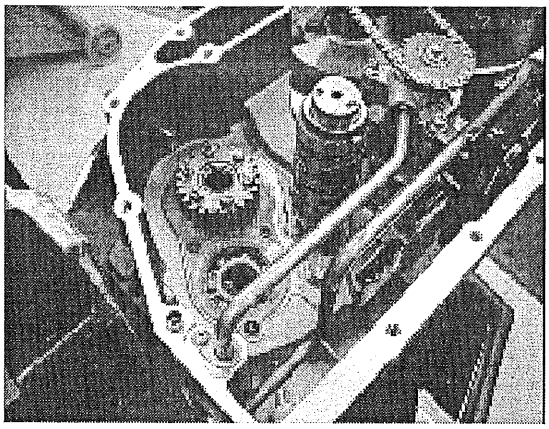

CLUTCH SHAFT INSPECTION / REMOVAL

1. The clutch shaft (D) (Mainshaft 5th) is press-fit in the bearing inner race. Inspect shaft and bearing with clutch shaft in the crankcase. Rotate gear and check for smooth movement and no play. Inspect gear, bearings, and shaft splines for wear or damage. Remove clutch shaft if bearing or gear service is required (Step 2).

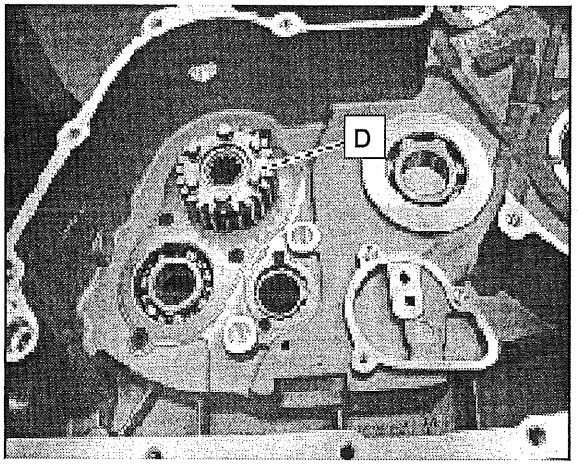

2. Use an arbor press to push clutch shaft out of bearing from clutch side. Support crankcase and protect case mating surface during press operation. Replace bearing if clutch shaft is removed.

TRANSMISSION INSPECTION

Refer to exploded views on Assembly View - Transmission , page 10.9. Standard specifications for shaft and gears are on Assembly View - Mainshaft / Clutch Shaft, page 10.10 (main and clutch shaft).

Shafts

1. Measure outside diameter of shafts and bearing areas for wear and concentricity as shown on Assembly View - Mainshaft / Clutch Shaft, page 10.10 Look closely at splines and retaining ring grooves of shafts for wear. Inspect ends of shafts for signs of wear:

- Dull finish
- Discoloration
- Rough or uneven surface
- Measurement outside of specification

Gears

2. Visually inspect:

- Gear internal splines (A)
- Gear teeth (B)
- Gear dogs (C) for rounding, cracks, chips
- Gear dog slots (D) for rounding
- Bearing surfaces (E)
- Shift fork grooves (F)

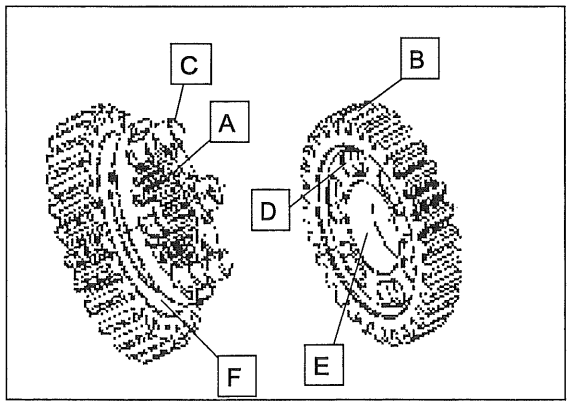

Check each gear for damage, cracks, wear (rounding of dogs or surfaces), or discoloration.

Clutch Shaft Bearings

3. Inspect clutch shaft needle bearings (inside) that support the mainshaft. The clutch shaft should spin freely and smoothly on the mainshaft. The bearings should support the shaft firmly with little or no detectable lateral movement.

4. Replace clutch shaft assembly if bearings are worn or damaged.

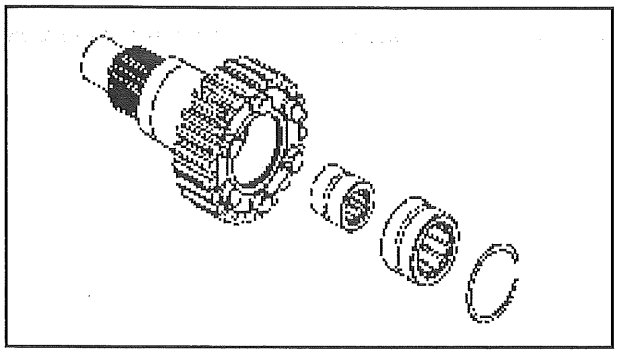

Shift Forks, Shift Fork Rails

Refer to specifications listed on Connecting Rod and Crankshaft Specifications, page 10.4 **and** Assembly View - Shift Drum and Shift Fork, page 10.11.

5. Inspect all contact surfaces (A) of each shift fork. Replace a shift fork if any part is discolored (overheated), unusually scored, warped, or worn beyond service limit.

6. Inspect each shift fork pin (B) for wear or damage and compare to specifications.

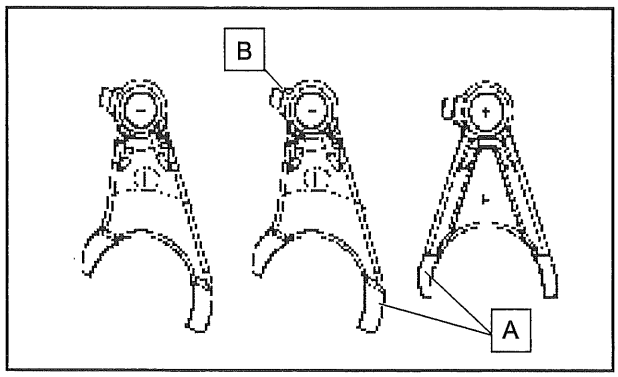

7. Inspect shift fork rails (C) for wear, scoring, or runout.

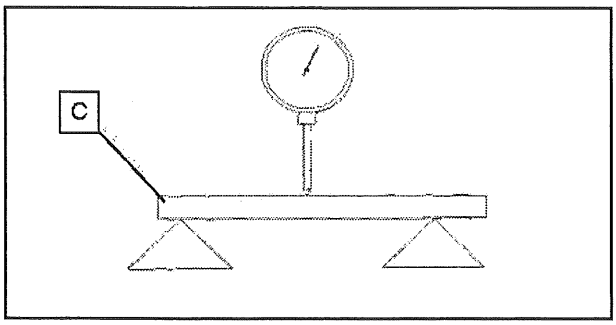

8. Measure shift fork rail O.D. for wear in 3 or 4 places along the length. The rail O.D. should be consistent over the entire length.

10

9. Slide rails into crankcase holes and check for a good snug fit.
10. Visually inspect the shift drum bearing (D) in the left crankcase for wear or damage. The bearing must be fully seated in the case and held in position by the retaining plate. Replace the bearing if it is loose in the bore, or if any side play is detected.

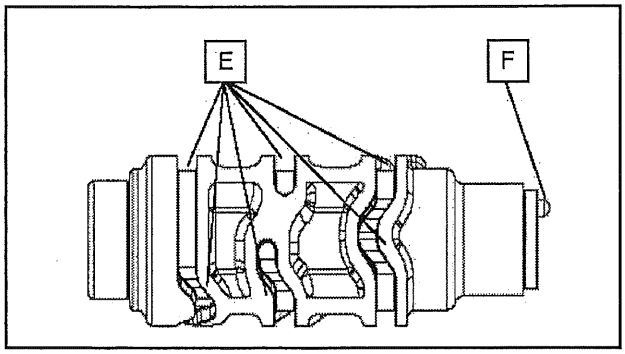

11. Temporarily install shift drum into bearing and rotate, checking for smooth bearing operation. Also, inspect shift drum bearing pin in the right crankcase to ensure it is not loose or worn.

SHIFT DRUM INSPECTION

12. Inspect shift drum grooves (E) for wear. Pay close attention to corners of grooves where forks change direction.
13. Inspect shift drum star alignment pin (F). It should fit tightly in drum and shift star.

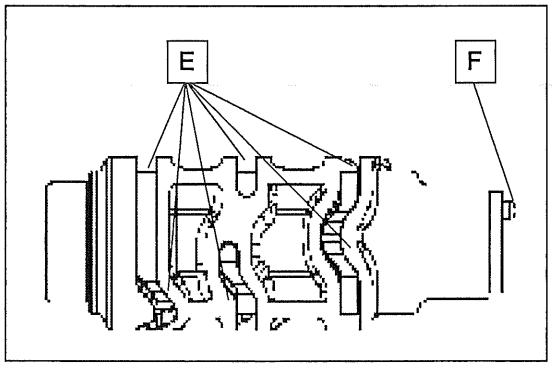

14. Inspect surface of shift drum star for excessive wear or damage.
15. Inspect right side shift drum bearing (G).
16. Temporarily install shift drum in right hand case bearing and inspect fit. Spin drum to check for smooth bearing operation.

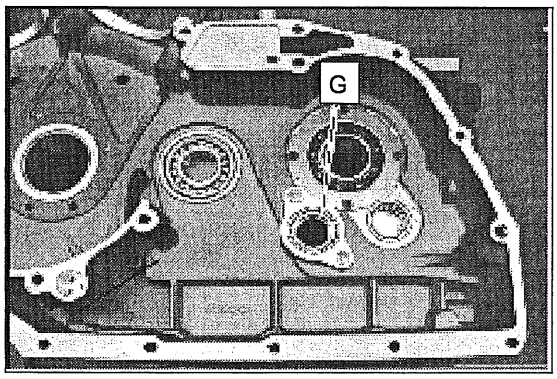

CRANKSHAFT ENDPLAY MEASUREMENT

NOTE

Engine should be at room temperature while performing this inspection procedure.

1. Secure the motorcycle in an upright position with the front wheel clamped in a wheel vise.
2. Remove the right side foot peg / floorboard assembly and set aside so the cam cover can be accessed.
3. Remove the oil dipstick and cover the fill hole with a clean, lint-free towel to keep debris from entering the oil sump during the inspection procedure.
4. Remove the six screws ① securing the cam cover to the crankcase.

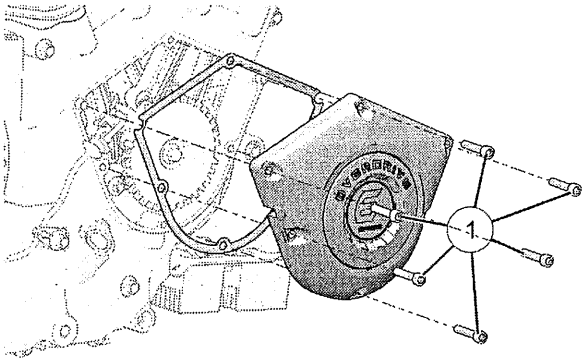

5. Remove the cam cover and cam cover gasket.

6. Using a non-metallic gasket scraper, clean both cam cover mating surfaces so that no residual gasket material remains.

IMPORTANT

Steps 7–17 require the use of a digital dial indicator with a magnetic base. For the best results, use a dial indicator ranging to .0001 mm.
Proper setup of the magnetic base and dial indicator is critical to obtaining an accurate measurement.

7. Wipe residual oil off of the timing wheel and verify that the magnetic surface of the dial indicator mount is free from any debris.
8. Attach the magnetic base above the bolt of the timing wheel.
9. Position leg (B) of the mounting base so it runs parallel with the relief in the front cylinder (C).

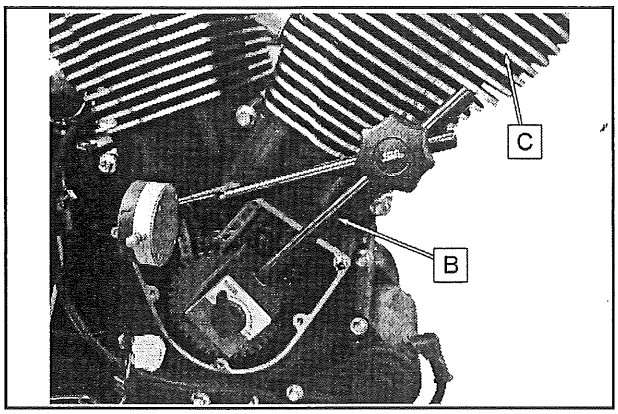

IMPORTANT

Ensure the base arms are not contacting any other portion of the engine.

10. Depress the plunger (D) on the dial indicator slightly and place it on the cam cover gasket surface.

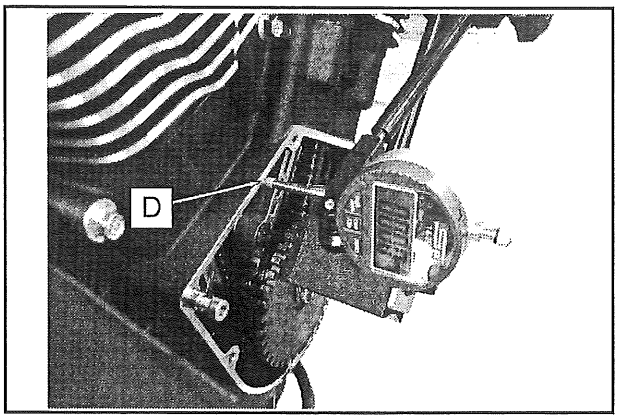

IMPORTANT

The plunger must be perpendicular (90° angles in two directions) to the gasket surface to ensure accurate measurements.

11. Place a hammer handle (or similar blunt object) as close to the timing wheel bolt as possible and apply enough static force to seat the crankshaft into the left side bearing bore.

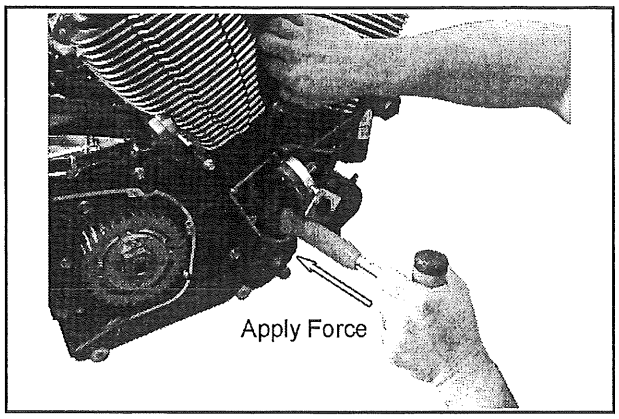

12. Power ON the dial indicator and set display to indicate millimeters (mm).
13. Press the ZERO button on the dial indicator until the display shows "0.000".
14. Slide a small, box-end wrench under the timing wheel getting as close to the crankshaft as possible.

15. Using the front chain guide mounting bolt ② as a fulcrum, pry the timing wheel outward firmly using a steady force.

NOTE

Remove the wrench and let the dial indicator stabilize before recording measurement.

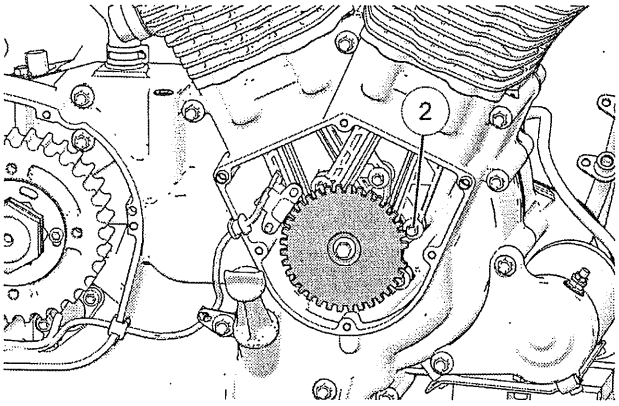

16. The resulting measurement is the crankshaft end play.

MEASUREMENT

Crankshaft End Play:
.050 - .300 mm (.0019 - .0118")

17. Reinstall the cam cover with a new gasket, and torque screws to specification.
18. Reinstall the foot peg / floorboard assembly using new bolts and torque to specification.

CRANKSHAFT REMOVAL

1. Separate RH crankcase from LH case (Crankcase Separation, page 10.13).
2. Rotate balance shaft (A) until counterweights are clear of crankshaft.

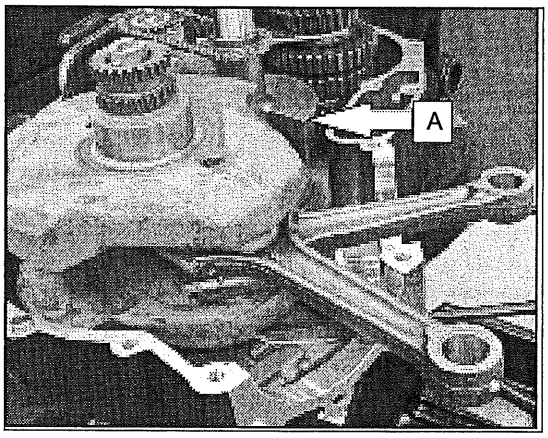

3. Lift crankshaft straight up until clear of case.

NOTE

Connecting rod bearings and main bearings are easily damaged. Be careful not to cause damage to these parts when servicing items within the crankcase.

CONNECTING ROD SIDE CLEARANCE INSPECTION

1. Move connecting rods to one side of crankshaft. Insert a feeler gauge between one connecting rod and the crankshaft. Compare measurement to specification on Connecting Rod and Crankshaft Specifications, page 10.4.
2. If clearance recorded exceeds service limit, the crankshaft, connecting rod or both must be inspected and worn parts replaced. Refer to crankshaft inspection on Crankshaft Inspection, page 10.26 and specifications on Connecting Rod and Crankshaft Specifications, page 10.4 to determine which part(s) are outside of specifications.

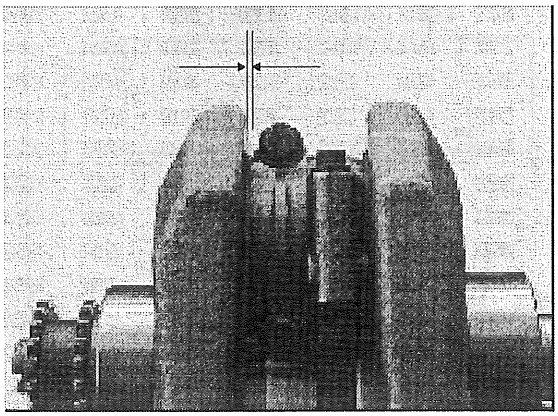

CONNECTING ROD REMOVAL / IDENTIFICATION

NOTE

The connecting rod caps are marked from the factory, however it is recommended that an additional reference mark be added for clarity. Caps are matched to rods and must be installed with the proper orientation. DO NOT strike or stamp the connecting rod.

1. Use a permanent marker to mark orientation of connecting rods and rod bearing caps. **These parts must be installed in their original locations.** EXAMPLE: Right connecting rod must be assembled to the right with the bearing cap that was removed from it. The bearing cap and connecting rod must be assembled in the same direction as it was removed using the **same bolt.**

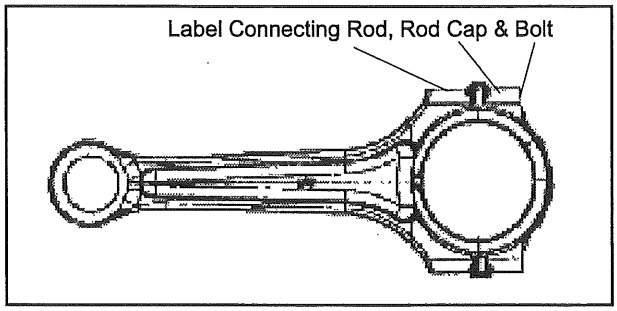

2. Remove connecting rod bolts and connecting rod bearing caps.

NOTE

It may be necessary to lightly tap the caps with a plastic mallet to loosen them.

CAUTION

The mating surface of connecting rod and cap is rough in appearance, which is a normal condition due to the manufacturing process. If rod caps are installed *incorrectly* and tightened, the precision mating surfaces will be damaged. Replace the connecting rod assembly if mating surfaces are damaged.

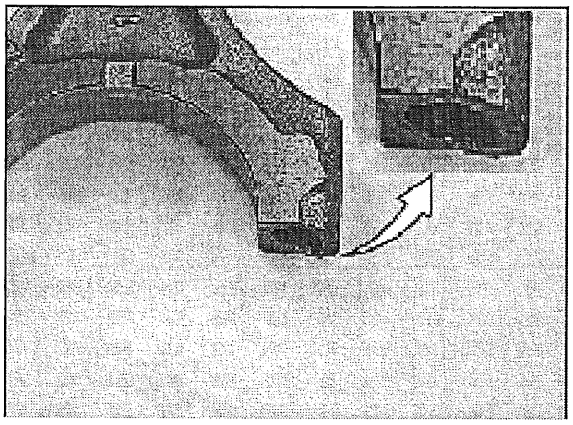

NOTE

Rods are marked OUT as shown in photo. "OUT" must face toward the left for the left connecting rod and must face toward the right for the right connecting rod (outside of the engine).

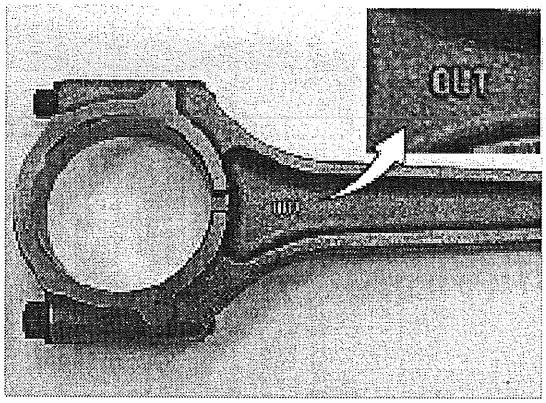

CONNECTING ROD INSPECTION (BIG END)

1. Refer to Piston Pin / Pin Bore Inspection, page 8.9 for connecting rod small end inspection.

CAUTION

Be sure to match connecting rod caps with their respective rod and orient the cap properly before installing the cap. Secure the big end of rods in a vise equipped with soft, protective jaws before torquing rod bolts.

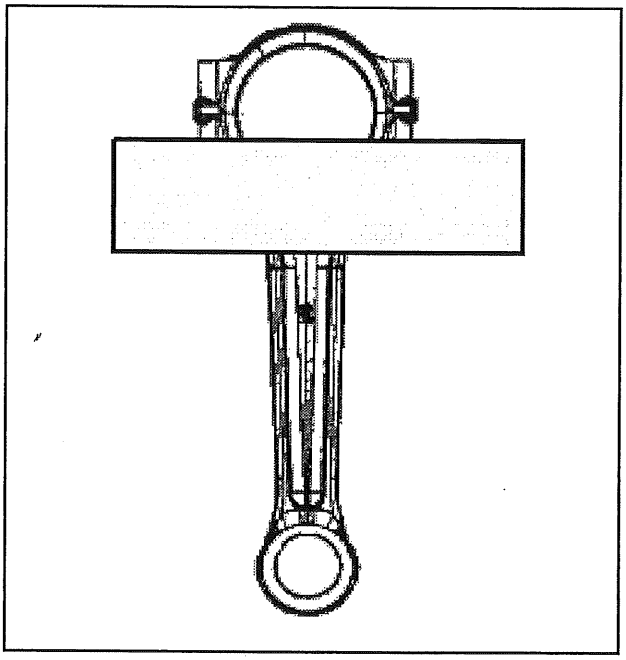

2. Remove bearings and install caps on connecting rods. Be sure mating surfaces (A) of rod and cap are clean.

3. Apply Victory engine oil to threads of rod bolts and nuts. Torque evenly in 2 steps to specification (Connecting Rod Installation, page 10.27).

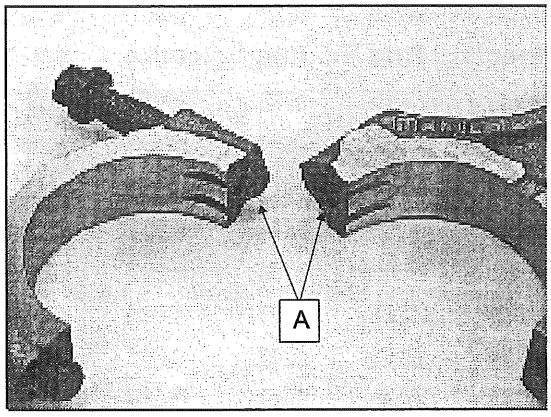

4. Measure I.D. of connecting rod big end for size and out of round. Compare to specifications on Connecting Rod and Crankshaft Specifications, page 10.4.

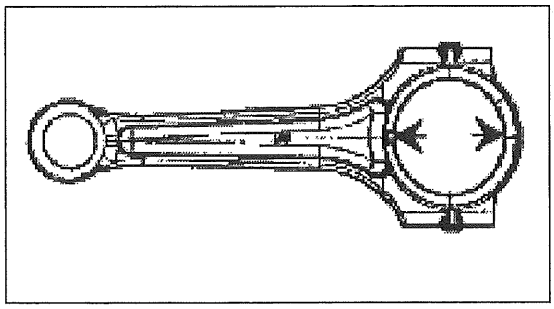

5. Visually inspect connecting rod upper and lower ends for scoring, damage, or excessive wear.

CONNECTING ROD BEARING INSPECTION

1. Inspect bearing inserts for unusual wear, peeling, scoring, damage etc. Replace as a set if damage is noted. Inspect bearing clearance and refer to Bearing Selection Chart (Connecting Rod Bearing Selection, page 10.26).

CONNECTING ROD BEARING CLEARANCE INSPECTION (TYPICAL)

1. Assemble the connecting rod cap with bearings and torque to specification below.

TORQUE
Connecting Rod Cap: **5 ft-lbs (7 Nm) (To Seat Bearing)** **40 ft-lbs (55 Nm) (Final Torque)**

2. Measure the connecting rod big end bearing I.D. with a dial bore gauge and record.

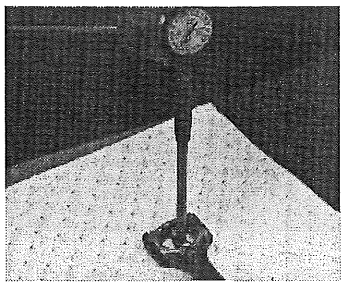

3. Measure the connecting rod journal on crankshaft and record.
4. Subtract the journal diameter from the connecting rod bearing diameter to calculate oil clearance and compare to specification (Connecting Rod and Crankshaft Specifications, page 10.4).
5. If service limits are exceeded, install new rod bearings and recheck oil clearance.
6. If service limits are still exceeded, determine if crankshaft or connecting rods need to be replaced.

CONNECTING ROD BEARING SELECTION

1. There are 3 sizes of connecting rod bearings available: Black, Orange and Blue (see chart below).
2. To determine which bearing to use, look at the color code on RH end of crankshaft...

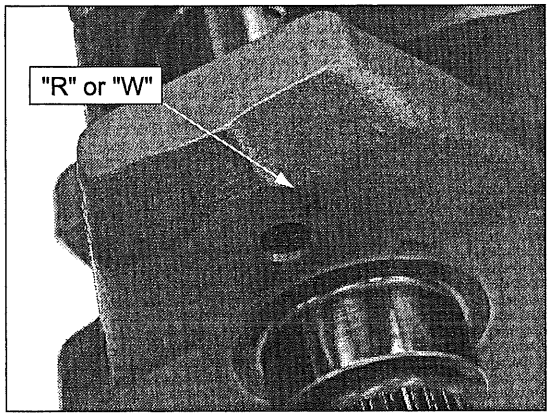

3. ...and the color code on the connecting rod.

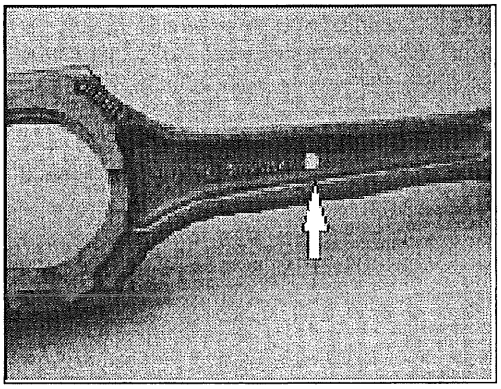

4. Refer to the chart below to select the proper bearing insert.

   FOR EXAMPLE: If the CONNECTING ROD paint mark is RED and the CRANKSHAFT stamp is W (white) (or not stamped), use BLUE bearing inserts.

Connecting Rod Bearing Selection Chart

CON ROD COLOR / CRANKSHAFT	BEARING COLOR (P/N 351439-0-XXX)	BEARING THICKNESS
WHITE Connecting Rod with **RED ("R" Stamp)** on Crankshaft	Black (**- 067**)	1.409-1.415 mm
WHITE Connecting Rod with **WHITE** Crankshaft (or not stamped)	Orange (**- 159**)	1.413-1.419 mm
RED Connecting Rod with **RED** Crankshaft	Orange (**- 159**)	
RED Connecting Rod with **WHITE** Crankshaft (or not stamped)	Blue (**- 027**)	1.417-1.423 mm

CRANKSHAFT INSPECTION

Record all measurements and compare to specifications on Connecting Rod and Crankshaft Specifications, page 10.4. Replace crankshaft if any measurement is worn beyond the service limit.

1. Measure the width of the rod bearing journal.

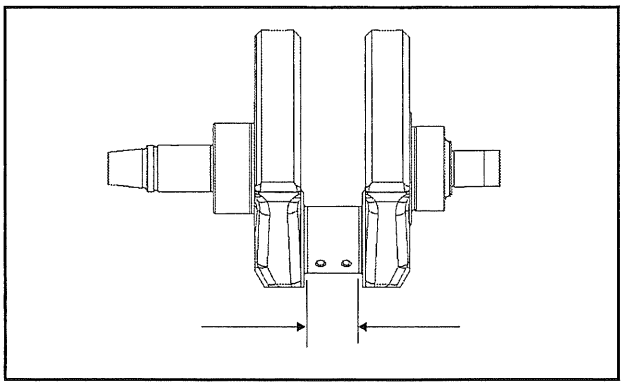

2. Measure width of connecting rods at big end.

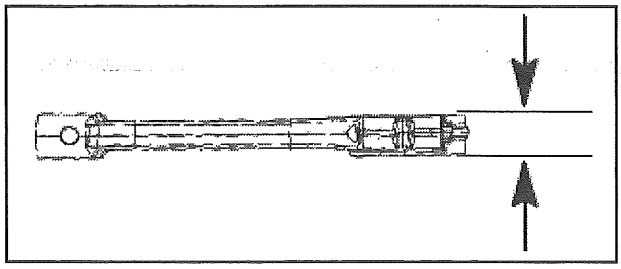

3. Visually inspect all bearing journals for scoring, damage or excessive wear.
4. Crankshaft and connecting rods are identified by color. Be sure to compare measurements to specification on Connecting Rod and Crankshaft Specifications, page 10.4 for the proper color (or non-marked) connecting rod or crankshaft.

   Measure O.D. of crankshaft rod journal in four places and compare to specifications.

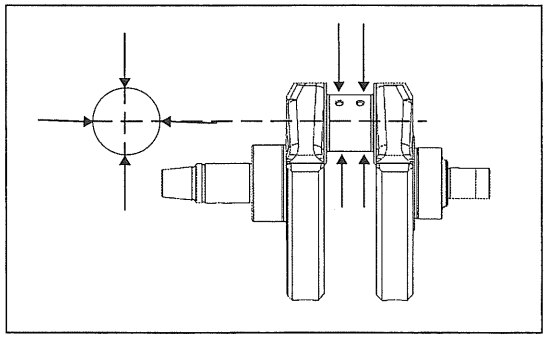

5. Measure O.D. of main bearing journals.

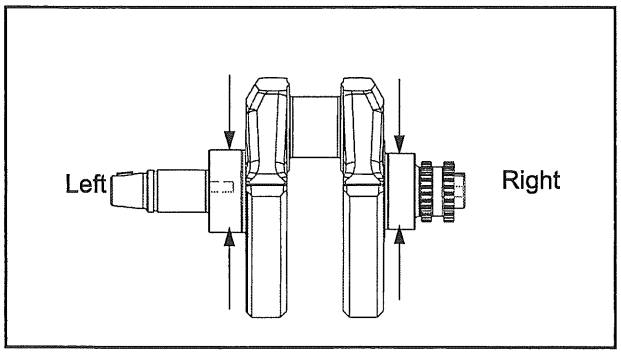

CONNECTING ROD INSTALLATION

1. Make sure proper bearing clearance is achieved by using the correct colored bearing insert for a given color combination of connecting rod and crankshaft.
2. Clean all oil off connecting rod, connecting rod cap and bearing inserts.
3. Install bearing inserts into connecting rods and caps. First, install bearing tab into groove, then press the rest of the bearing into place.

NOTE

Procedure during disassembly called for marking of connecting rods and caps. Ensure that each part is installed in original location including rod cap bolts.

4. Apply assembly lube to connecting rod bearings and crank pin.

   Moly Assembly Paste PN: 2871460
5. Install rods and caps onto the crankshaft, observing the "OUT" mark on the connecting rods. "OUT" must face toward the **left** for the **left** connecting rod and must face toward the **right** for the **right** connecting rod (outside end of crankshaft). Be sure the I. D. marks made previously are aligned.

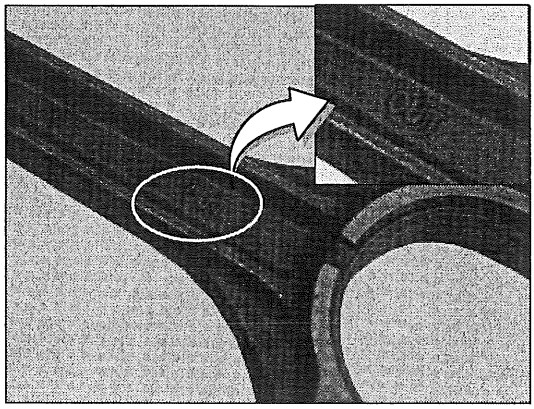

6. Tighten rod cap bolts:

TORQUE

Connecting Rod Cap:
5 ft-lbs (7 Nm) (To Seat Bearing)
40 ft-lbs (55 Nm) (Final Torque)

7. Check that the connecting rods rotate smoothly and freely on crankshaft journal.

8. If a connecting rod or crankshaft was replaced, re-measure side clearance (A) to be sure it is within specification listed on Connecting Rod and Crankshaft Specifications, page 10.4, before assembly.

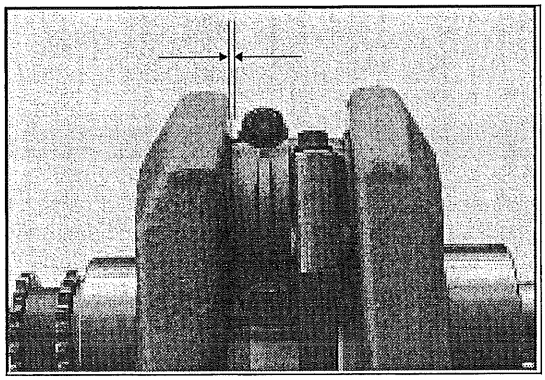

CRANKSHAFT CLEANING

1. Remove blind plugs from crankshaft to ensure that all passages are clear.

CAUTION
Blind plugs are installed with Loctite™ 262. Use localized heat (such as a soldering gun) when removing blind plugs.

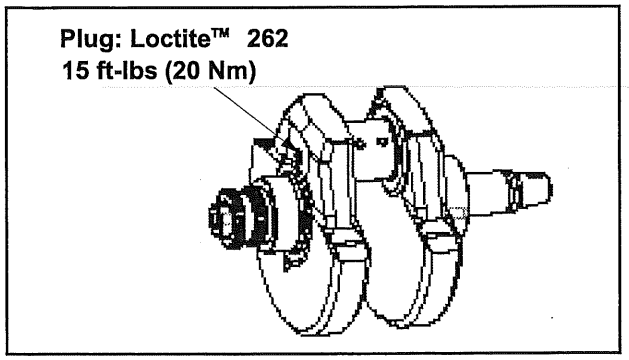

2. After cleaning passages, apply Loctite™ 262 to blind plug threads and install plugs into crankshaft to specified torque (Crankshaft / Connecting Rod / Crankcase Torque Pattern, page 10.7). Plug should be flush with surface of crankshaft.
3. Install woodruff key (s). Install drive and alignment pins.

MAIN BEARING INSPECTION

1. Inspect crankcase main bearing surfaces for wear, peeling, scoring, or damage.
2. Inspect alignment of bearing lubrication hole (A) in left crankcase half or (B) in right case half. Holes must be aligned with their respective oil passage in crankcase.

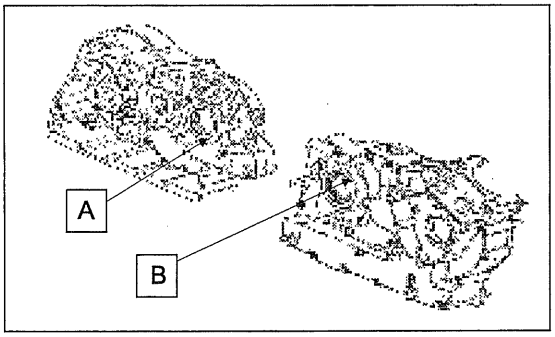

MAIN BEARING OIL CLEARANCE INSPECTION

1. Measure main bearing I. D. and concentricity with a dial bore gauge for right and left side. Compare to specification (Connecting Rod and Crankshaft Specifications, page 10.4). Subtract crankshaft main journal diameter from main bearing diameter to calculate oil clearance.

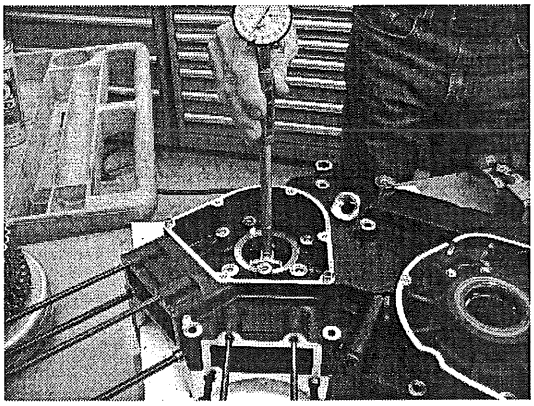

2. If crankshaft dimensions are within tolerances and oil clearances are incorrect, the crankcase set must be replaced or new main bearings installed and line-honed by a competent machinist.

NOTE
Replace crankcase halves as a set.

LEFT CRANKCASE ASSEMBLY

Prepare LEFT crankcase for assembly:

Refer to exploded view on Assembly View - Crankcase, page 10.6 for torque values, bearing press depth, and locking agent.

1. Clean crankcase and oil passage (A) thoroughly. Rinse and dry with compressed air.

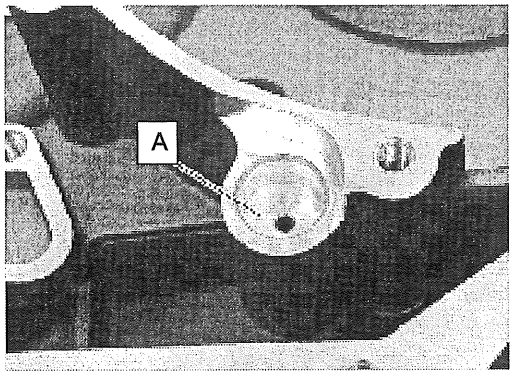

- Install new bearings in crankcase as required
- Apply a film of lithium grease to outer race of bearings to prevent galling upon installation
- Press on outer race of bearings using an arbor press and a suitable arbor that is slightly smaller than bearing outside diameter
- DO NOT press on inner race of ball bearings

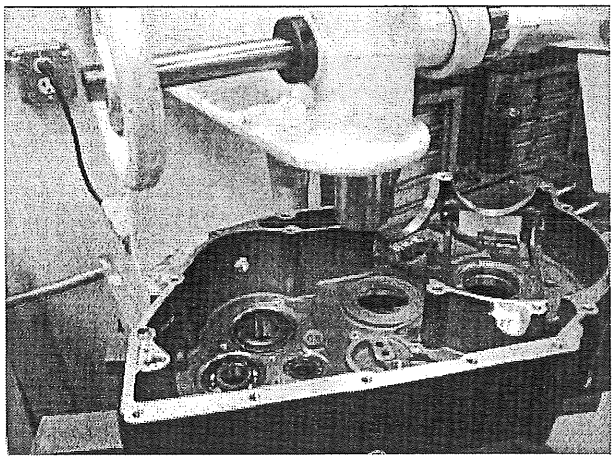

2. Press balance shaft bearing from the primary side using an arbor press (B).

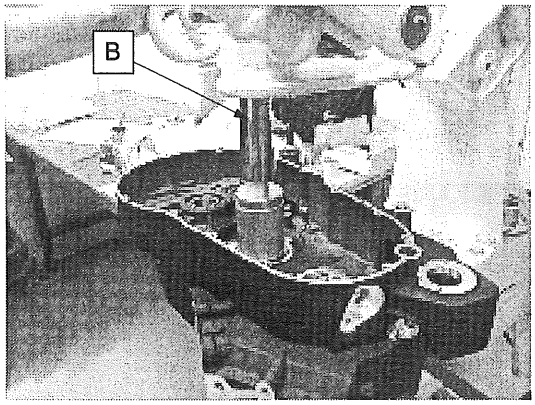

CLUTCH SHAFT INSTALLATION

3. Place clutch shaft support tool press plate on *clutch side* of crankcase to support inner race of bearing. Clutch shaft is a firm press-fit in bearing, and bearing damage may result if inner race is not supported during the press operation.

Clutch Shaft Bearing Support: PV-47331

4. Press clutch shaft until fully seated using an arbor press (C). Check for smooth, quiet operation after shaft is installed.

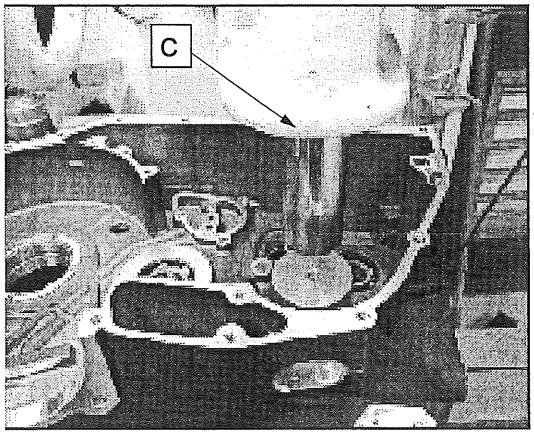

RIGHT CRANKCASE ASSEMBLY

Prepare RIGHT crankcase for assembly:

Refer to exploded view onAssembly View - Crankcase, page 10.6 for torque values, bearing press depth, and locking agent.

1. Clean crankcase oil passages (D) thoroughly. Rinse and dry with compressed air.

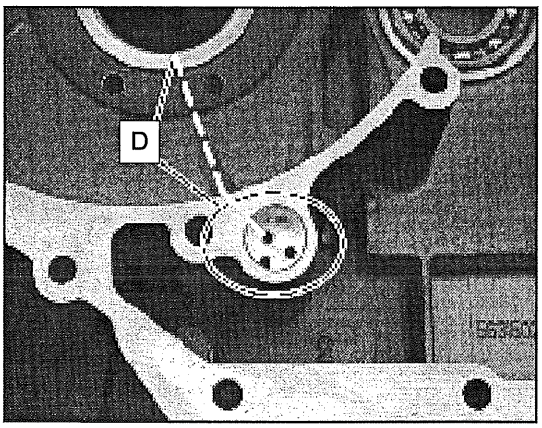

- Install new bearings in crankcase as required.
- Apply a film of lithium grease to outer race of bearings to prevent galling upon installation.
- Press on outer race of bearings using an arbor press and a suitable arbor that is slightly smaller than bearing outside diameter.
- *DO NOT press on inner race of ball bearings.*

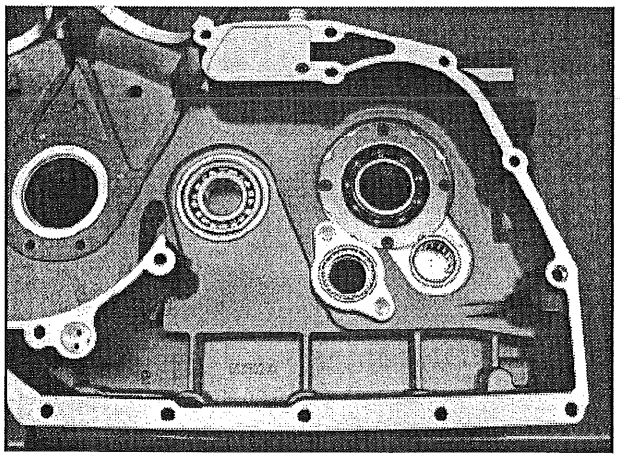

2. If main bearings are replaced, they must be line-honed with the left side crankcase to proper finished size. Press operation and fitting must be performed by a qualified machinist.

CRANKCASE REED VALVE ASSEMBLY REMOVAL & INSPECTION

1. Separate engine cases (Crankcase Separation, page 10.13).
2. Remove the retaining screws for the reed valve assembly. Remove breather valve assembly.
3. Inspect the reed valve for bending, pitting, or other damage at the sealing surface that would prevent a good seal.
4. Replace the reed valve as necessary.

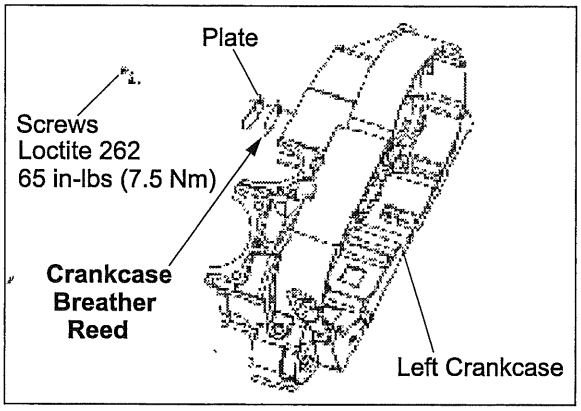

CRANKSHAFT INSTALLATION

NOTE
Install left engine case onto an engine stand.

1. Apply assembly paste to main bearings.

Moly Assembly Paste
PN: 2871460

Hold crankshaft over left crankcase and position rods so that left side rod is in cutout for rear cylinder and right side rod is in cutout for the front cylinder.

2. Place crankshaft into left crankcase half.

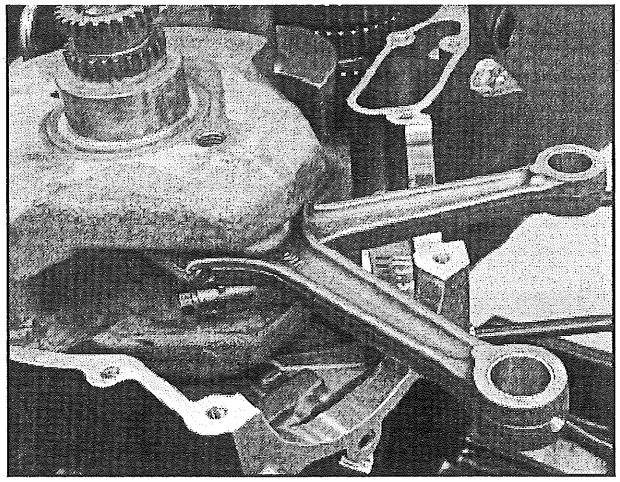

TRANSMISSION INSTALLATION

NOTE

Transmission MUST be in 1st gear before engine case halves are assembled together.

1. Be sure all bearing retainer plate screws are installed and tightened to specification.
2. Be sure clutch shaft (A) is fully seated in bearing.

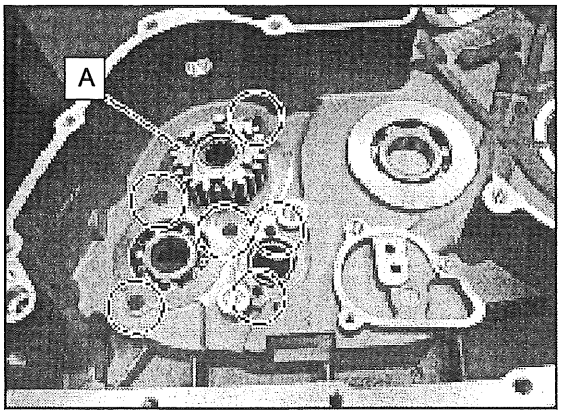

3. Lubricate parts with Victory engine oil. Apply Moly Assembly Paste (PN 2871460) to ends of transmission shafts.
4. Install countershaft and mainshaft into the left crankcase as an assembly, holding mainshaft 4th gear on shaft during assembly. Make certain both shafts are fully seated and rotate freely.
5. Install shift drum into case. Then install forks in grooves of sliding gears.
6. Install shift rails through forks.
7. Rotate shift drum to align proper grooves with forks.

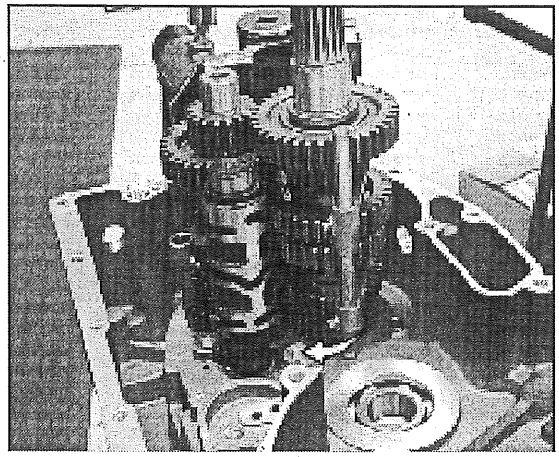

8. Move shift fork pins into drum grooves and seat rails.
9. Photo shows transmission installed and shift forks engaged; shift rails seated.

NOTE

Shift transmission into 1ST gear for crankcase assembly

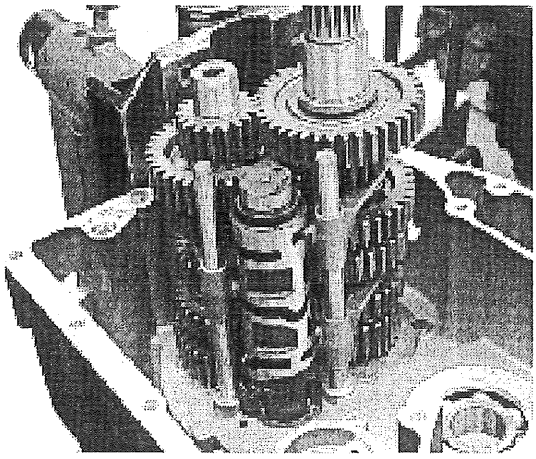

10. Install balance shaft, oil pump with pipes (Balance Shaft Installation, page 10.32), and crankshaft (Crankshaft Installation, page 10.30) if removed.
11. Refer to Crankcase Assembly on Crankcase Assembly & Sealing, page 10.33

BALANCE SHAFT

BALANCE SHAFT REMOVAL & INSPECTION

1. Remove bolt (A) from oil pump drive sprocket. Use engine lock tool between balance shaft weight and crankcase to hold shaft.

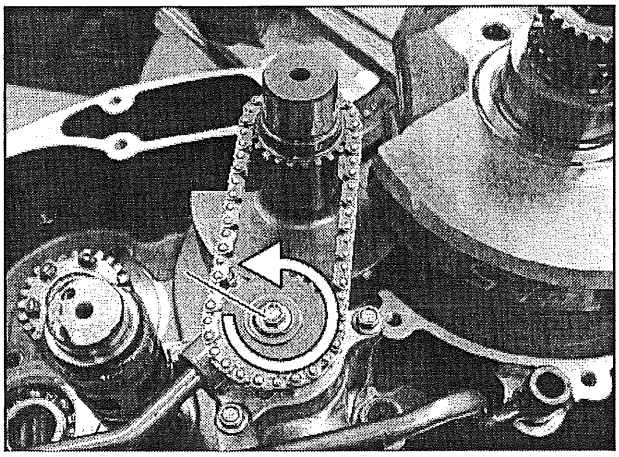

2. Remove sprocket & chain from oil pump.
3. Remove chain from balance shaft sprocket.
4. Rotate balance shaft until counterweights are clear of crankshaft. Grasp balance shaft and remove it from case.
5. Inspect sprocket teeth for wear or damage.
6. Check shaft for runout, or twisting.
7. Rotate right and left balance shaft bearings by hand while observing bearing rotation. Bearings should run smooth and quiet and shaft should be a snug fit in bearing.
8. Visually inspect bearings for damage.

BALANCE SHAFT INSTALLATION

1. Lubricate balance shaft bearings with engine oil.
2. Insert threaded end of shaft into left crankcase bearing.
3. Install oil pump drive chain onto balance shaft.
4. Install chain and sprocket onto oil pump shaft. Align flats to seat sprocket.

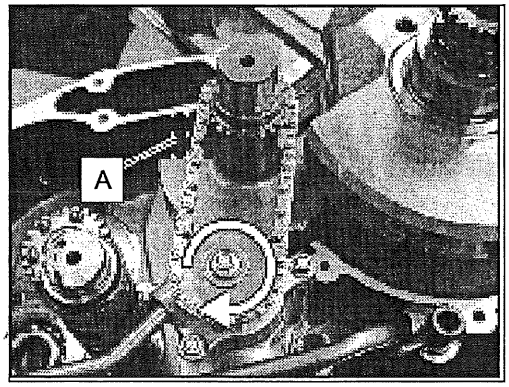

5. Install engine lock tool between balance shaft weight and crankcase (A) to lock balance shaft.
6. Install oil pump sprocket bolt and torque to specification.

TORQUE
Oil Pump Sprocket Bolt: **85 in-lbs (10 Nm)**

CRANKCASE

CRANKCASE ASSEMBLY & SEALING

NOTE

Place transmission in 1st gear prior to crankcase assembly.

1. Clean crankcase mating surfaces to remove all grease, oil, and old sealant.
2. Check to be sure all shafts are seated, and that all (new) O-rings, alignment dowel pins, oil pipes, etc. are in place.
3. Install the clutch shaft holding tool PV-45028.

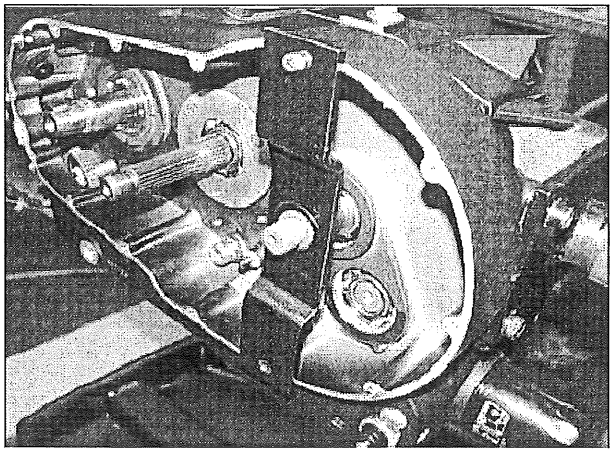

4. Apply an even bead of Loctite™ Ultra Black 598 to entire case sealing surface.
5. Spread out sealer into a thin even layer on entire case mating surface. Be sure all areas are covered. DO NOT ALLOW SEALANT TO DRY. CONTINUE ASSEMBLY UNTIL CASES ARE SEALED AND ALL BOLTS ARE TIGHT.

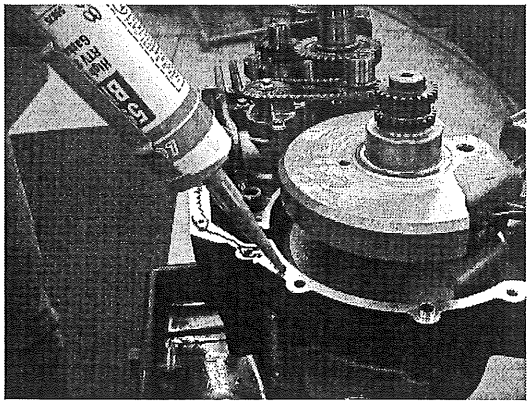

6. Install crankshaft bearing protector over the cam chain drive sprocket.

Crankcase Bearing Protector
PV-47207

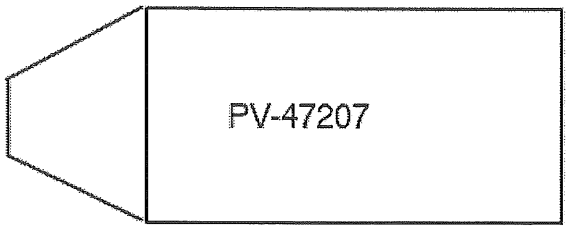

7. Assemble the Crankcase Installation Tool as shown. PVX-47429 is required if seal sleeve is not installed on output shaft.

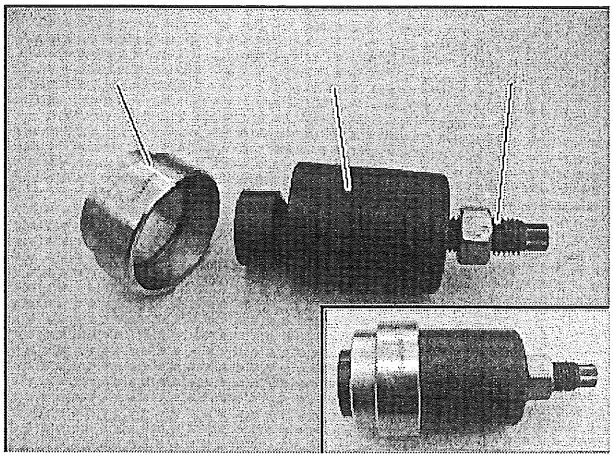

8. Install crankcase installation tool onto the output shaft.
9. Pull crankcase together by tightening nut and tapping on crankcase with a soft mallet.

NOTE

The cases will mate before the mainshaft is drawn fully into bearing. IMPORTANT! Continue to turn nut and tap case and apply approximately 75-100 ft-lbs (102-136 Nm) torque to the nut.

10. Remove the tool.

10

11. Install crankcase bolts with starter motor as shown below.

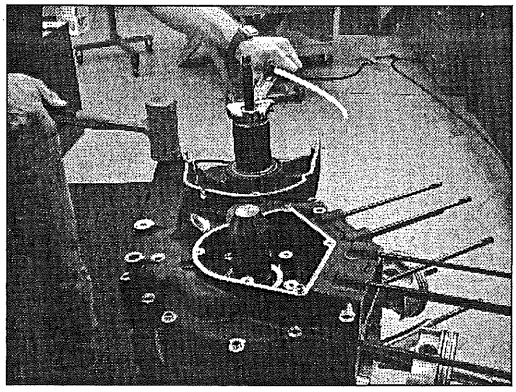

12. Tighten crankcase bolts in two steps following the sequence shown below. Repeat the final torque.

TORQUE
Crankcase Bolts: **(STEP 1) 15 / 22 ft-lbs (20 / 30 Nm)** **(STEP 2) 22 ft-lbs (30 Nm)**

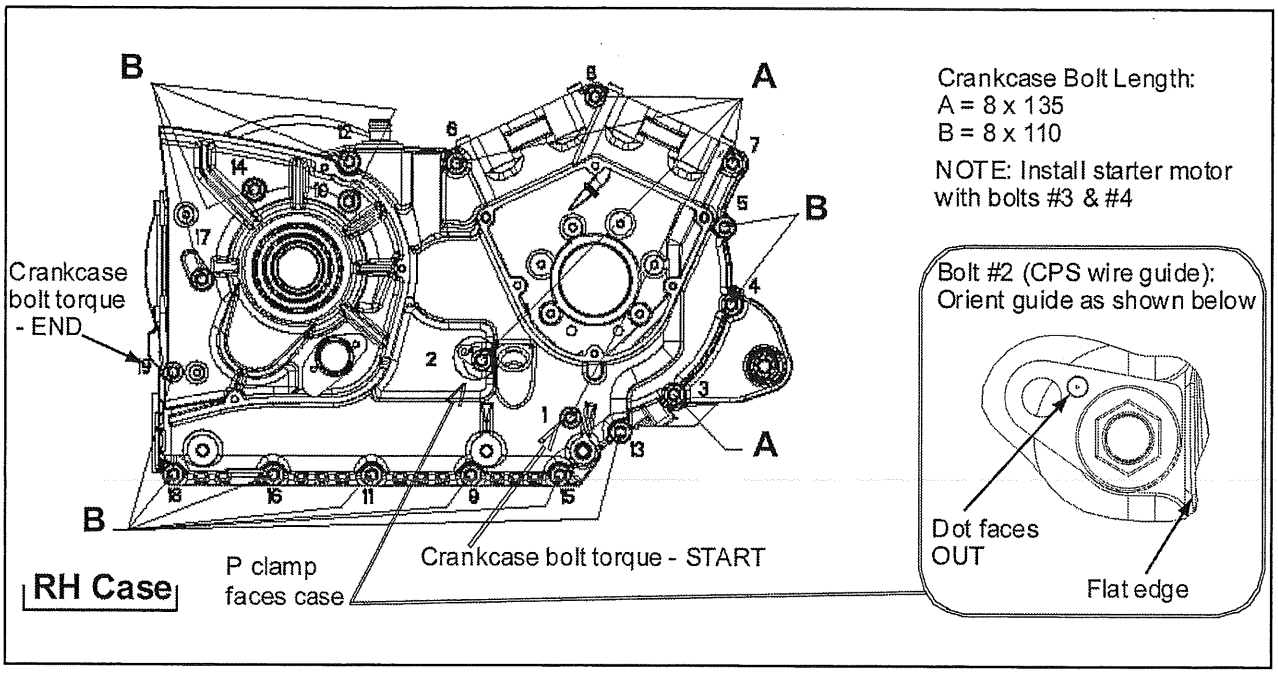

13. Clean threads of countershaft. Install the washer and a NEW stake nut and tighten to specified torque. After assembly, stake the nut with appropriate staking tool as shown on page Stake Nut Installation, page 10.37.

TORQUE
Countershaft Stake Nut: **125 ft-lbs (170 Nm)**

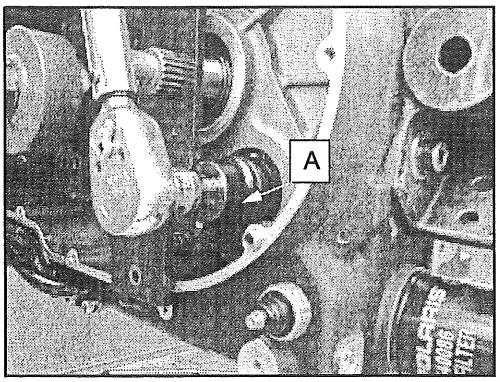

14. Remove tool from shaft and assemble shift mechanism, primary drive, and primary cover. Refer to Primary Cover Installation, page 9.13.
15. Install a new mainshaft (output) seal in RH crankcase using seal installer.

Final Drive Seal Installer **PV-43505**

16. Inspect output shaft seal sleeve for burrs, nicks or surface wear. The surfaces that contact bearing race and drive sprocket must be smooth and flat to prevent loosening of the drive sprocket.
17. Install O-ring (B), seal sleeve (C) with tapered edge toward O-ring, and drive sprocket.

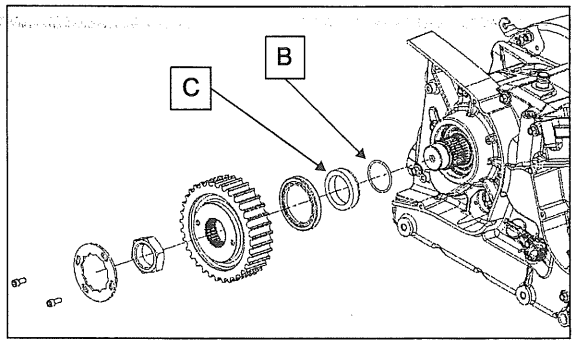

NOTE
Use an 8mm or a 5/16 diameter pin punch in timing hole and shift transmission into 1st gear to hold crankshaft while tightening sprocket nut.

TORQUE
Drive Sprocket Nut: **180 ft-lbs (244 Nm)**

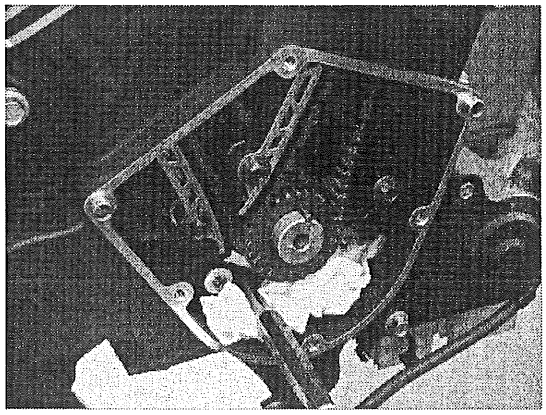

10

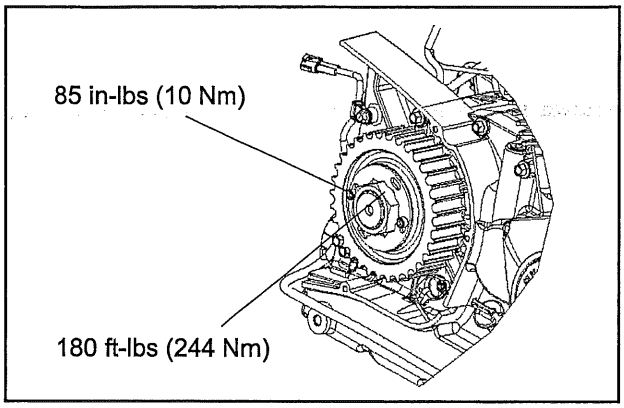

18. Install lock plate screws.

NOTE

The lock plate can be installed in many positions and either side of the plate can be used. If you cannot find a position that will work, flip the plate over and again try to install it. If the plate still does not align, tighten the sprocket nut slightly and try to fit the lock plate again.

19. Rotate the plate CLOCKWISE until it stops and hold it firmly against the nut.
20. Tighten the lock plate screws to specified torque.
21. Install CPS timing wheel.

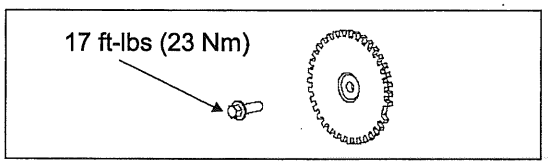

STAKE NUT INSTALLATION

- Stake nuts are located on the mainshaft, balance shaft & countershaft
- It is important that they are torqued and staked correctly for proper function

NOTE
Do not reuse or reinstall any previously used stake nut. A new stake nut needs to be installed every time the nut is removed or loosened.

Use the following procedure to install the stake nuts correctly:

1. Clean threads on shaft so there is no oil or contaminants.
2. Thread NEW stake nut onto shaft finger tight.
3. Torque stake nut to specification

TORQUE
Stake Nut Torque: **125 ft-lbs +/- 13 ft-lbs**

4. Stake the stake nut as shown below using round side of punch. Do not crack or tear staking lip. Do not use a sharp chisel to stake the nut.

Be sure staking lip does not tear/crack in staking area.
Stake nut with round side of punch.

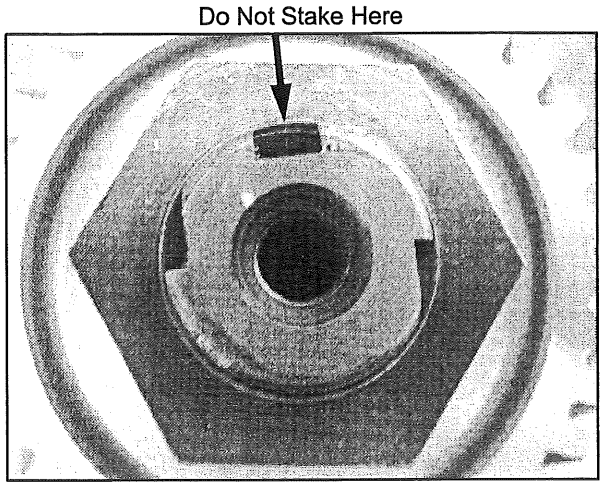

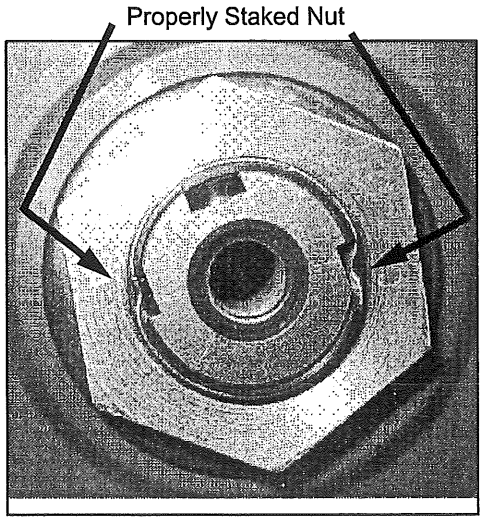

10

TROUBLESHOOTING

PROBLEM	POSSIBLE CAUSE	PART(S) AFFECTED	REPAIR RECOMMENDED
Transmission Will Not Shift	Broken Shift Cam	Shift Cam	Replace shift cam
	Bent Shift Forks	Shift Fork	Replace shift fork(s)
	Worn Gearshift Pawl	Shift Cam	Replace shift cam
	Broken Gears	Transmission Gears	Replace necessary parts
	Damaged/Broken Bearings	Transmission, Shift Cam Bearings	Replace necessary parts
	Worn Gear Shift Ratchet Mechanism	Shifter Ratchet	Refer to Clutch, Primary / Shift Chapter
	Broken or out-of-place spring on shift ratchet	Shift Ratchet Spring	Refer to Clutch, Primary / Shift Chapter
	Shift Detent Plunger Stuck	Shift Detent Plunger	Repair as necessary
	Seized Pivot Point, Bent External Shift Linkage	External Shift Linkage	Repair as necessary
	Bent or Distorted Shift Fork Rails	Shift Fork Rails	Replace Shift Fork Rails
	Debris From Broken Parts Locking Transmission	Transmission Components	Repair as necessary
Excessive Noise Related to Bottom End of Engine	Worn Main Bearings	Crankshaft and/or Crankshaft Bearings	Repair as necessary
	Worn Connecting Rod Bearings	Connecting Rod Bearings and/or Connecting Rod and/or Rod Bearings	Repair as necessary
	Worn Connecting Rod Small End Bushing	Connecting Rod, Connecting Rod Bushing, Piston Pin, Piston	Repair as necessary
	Worn, seized, chipped or broken gear teeth	Transmission Gears	Repair as necessary
	Worn, seized, chipped or broken Transmission Bearings	Transmission Bearings	Repair as necessary
	Originates from Primary Cover	Clutch, Torque Compensator, Flywheel, Starter Drive Assembly, Starter Clutch, Starter Motor	Refer to chapters Clutch, Primary / Shift & Electrical
	Oil Pump	Oil Pump, Oil Pump Drive	Refer to Lubrication / Cooling Chapter
	Cam Drive	Cam Chain, Cam Sprocket	Refer to Cylinder Head / Valves Chapter
Transmission Hard to Shift	Improper Clutch Operation	Clutch	Refer to Clutch, Primary / Shift Chapter

PROBLEM	POSSIBLE CAUSE	PART(S) AFFECTED	REPAIR RECOMMENDED
	Incorrect Oil Viscosity	Engine oil and filter	Refer to Frame / Body / Exhaust Chapter
	Incorrect Clutch Adjustment	Clutch Adjustment	Refer to Frame / Body / Exhaust Chapter
	Bent, Rubbing, Sticky, Broken Shift Shaft	Shifter Ratchet Assembly	Refer to Clutch, Primary / Shift Chapter
	Sticking Pivot Point, Bent External Shift Linkage	External Shift Linkage	Repair or replace components as necessary
	Bent or Distorted Shift Forks	Shift Forks	Replace bent shift fork
	Damaged Shift Drum Grooves	Shift Drum	Replace damaged shift drum
	Shift Detent Plunger Stuck	Shift Detent Plunger	Repair as necessary
	Bent or Distorted Shift Fork Rails	Shift Fork Rails	Replace Shift Fork Rails
Transmission Jumps Out of Gear	Broken Shift Stop Pin	Shift Stop Pin	Replace stop pin
	Worn Shift Drum Pawls or Shifter Ratchet	Shift Drum or Shift Linkage	Replace damaged shift drum or shifter ratchet
	Broken Shift Ratchet Spring	Shift Ratchet Spring	Replace spring
	Damaged Shift Drum Grooves	Shift Drum	Replace shift drum
	Bent, Worn, Distorted Shift Forks	Shift Forks	Replace shift forks
	Bent or Distorted Shift Fork Rails	Shift Fork Rails	Replace shift fork rails
	Worn Engagement Dogs on Transmission Gears	Transmission Gears	Replace necessary parts

NOTES

CHAPTER 11
DRIVE LINE

SPECIAL TOOLS 11.2
DRIVE LINE SPECIAL TOOLS 11.2
ASSEMBLY VIEWS / TORQUE VALUES 11.3
REAR WHEEL FASTENER TORQUES 11.3
DRIVE SPROCKET 11.4
BELT GUARD SPECIFICATIONS 11.5
DRIVE BELT 11.6
BELT INSPECTION 11.6
BELT REMOVAL 11.6
BELT INSTALLATION 11.6
DRIVE SPROCKET 11.7
DRIVE SPROCKET AND SEAL REMOVAL 11.7
DRIVE SPROCKET INSPECTION 11.8
DRIVE SPROCKET AND SEAL INSTALLATION 11.8
REAR SPROCKET 11.10
REAR SPROCKET REMOVAL 11.10
REAR SPROCKET INSPECTION 11.10
REAR SPROCKET INSTALLATION 11.10
REVERSE SYSTEM 11.11
REVERSE DRIVE MECHANISM (IF EQUIPPED) 11.11
REVERSE GEAR CASE ASSEMBLY VIEW 11.12
REVERSE LINKAGE ADJUSTMENT 11.12
REVERSE SYSTEM TEST 11.14
REVERSE SYSTEM FUSE LOCATION 11.14
REVERSE COUPLER SHAFT KEY REPLACEMENT 11.15
TROUBLESHOOTING 11.16
TROUBLESHOOTING FINAL DRIVE 11.16

SPECIAL TOOLS

DRIVE LINE SPECIAL TOOLS

SPECIAL TOOL	PART NUMBER
Output Shaft Seal Installation Tool	PV-43505A
8mm (5/16²) Pin Punch (to hold crankshaft for drive sprocket removal / installation)	Commercially available
Torque Wrench with 185 ft-lbs (250 Nm) range	

⚠ CAUTION

Some drive line repair or maintenance involves supporting the machine with the rear end elevated. Take precautions so that the motorcycle is securely supported while the tire is off the ground to reduce the possibility of personal injury, or damage to the motorcycle.

- Replace belt and sprockets as a set if the drive system has been in service for 5000 miles or more (8000 Km).
- Refer to Chapter 2 for **MAINTENANCE** of drive belt.
- Refer to Chapter 14 for **TIRE REMOVAL, REPAIR, & BALANCING**.
- Refer to Chapter 15 for **BRAKE SYSTEM** service and repairs.

ASSEMBLY VIEWS / TORQUE VALUES

REAR WHEEL FASTENER TORQUES

All surfaces and fasteners must be clean, dry, and oil free before assembly.
See Chapter 13 for Rear Wheel Removal / Installation.

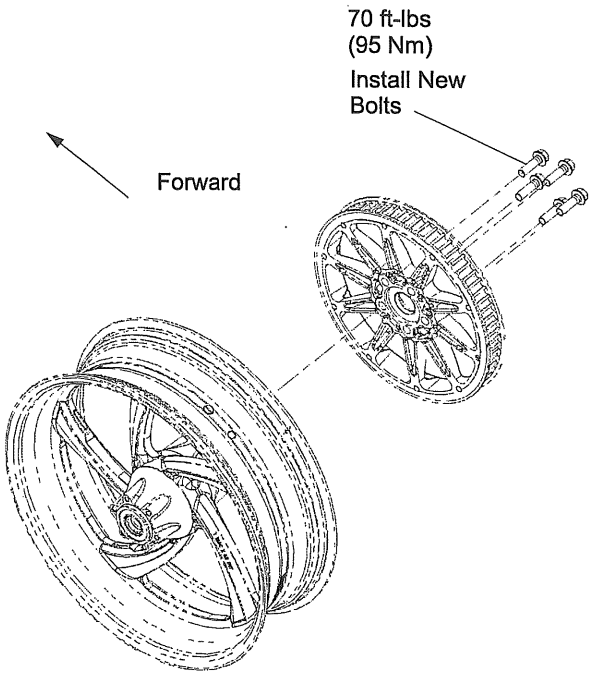

81 Nm (60 ft-lbs)

DRIVE SPROCKET

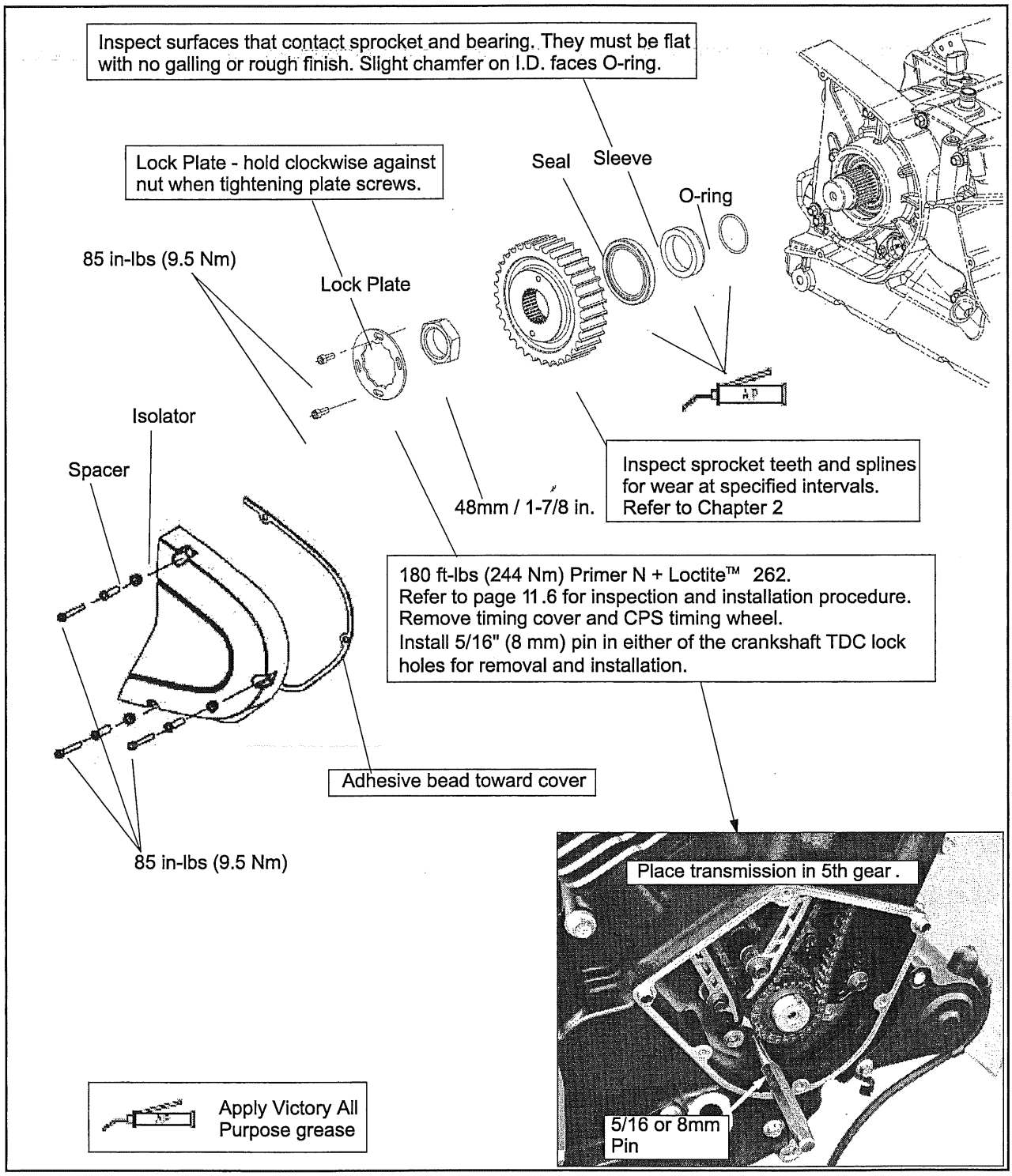

BELT GUARD SPECIFICATIONS

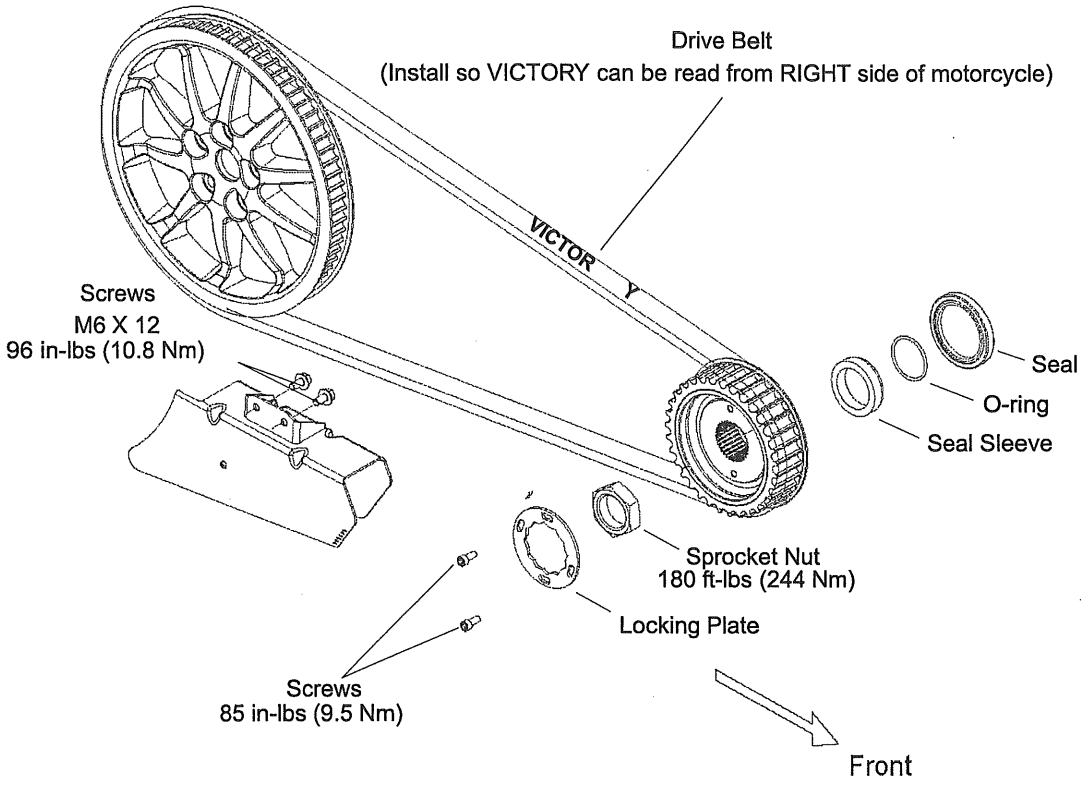

Drive Belt Width: 28mm
Drive Belt Pitch: 14mm
Drive Belt Teeth: 154

11

DRIVE BELT

BELT INSPECTION

1. Inspect belt tension and adjust if necessary. Refer to Drive Belt Tension - Inspection, page 2.26.
2. If one or more components are damaged, replace belt and both sprockets as a set if the drive system has been in service for 5000 miles (8000 Km) or more.

BELT REMOVAL

NOTE

If you plan to remove the front sprocket, refer to Drive Sprocket Removal located in this chapter.
Always mark the drive belt or note its orientation for installation in the same rotational direction.

⚠ WARNING

A mis-aligned rear axle can cause drive line noise and damage the drive belt, which could cause belt failure and loss of control of the motorcycle.

⚠ WARNING

Care should be taken to be sure the motorcycle will not tip or fall while elevated. Severe personal injury or death may occur if the motorcycle tips or falls.

1. Secure the front wheel in a wheel vise.
2. Place a jack underneath the engine and lift until the rear tire is not resting on the surface.
3. Remove both mufflers (see).
4. Remove head pipe crossover fasteners as described in head pipe removal (see Head Pipe Removal / Installation, page).
5. Loosen head pipe flange nuts.
6. Loosen rear wheel axle nut and loosen each axle adjuster an equal amount of turns. Push wheel forward to slacken belt.
7. Remove front sprocket cover.
8. Pull head pipes outward to gain access to front sprocket cover bolts and provide clearance for cover removal.
9. Remove drive belt.

BELT INSTALLATION

1. Inspect sprockets and verify sprocket fasteners are tight.
2. Place belt onto drive sprocket and rear sprocket.
3. Install drive sprocket cover. Torque fasteners to specification (Drive Sprocket, page 11.4).
4. Adjust belt tension and verify proper alignment Drive Belt Tension - Inspection, page 2.26. Torque rear wheel axle nut to specification.
5. Install exhaust.
6. Install right floorboard.

DRIVE SPROCKET

DRIVE SPROCKET AND SEAL REMOVAL

1. Remove drive belt.
2. Remove drive sprocket cover and gasket.
3. Remove sprocket lock plate screws (A) and lock plate.

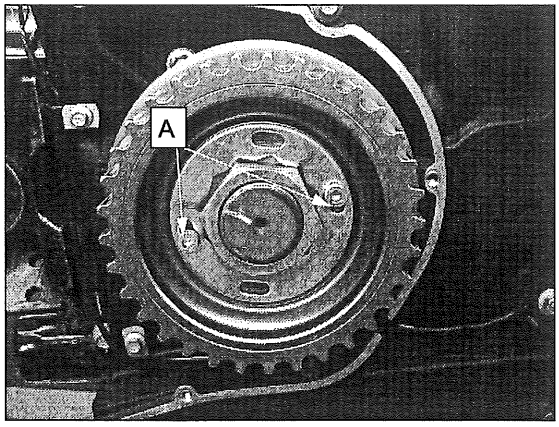

4. Place transmission in 5th gear.
5. Remove right side lower timing cover and CPS timing wheel.

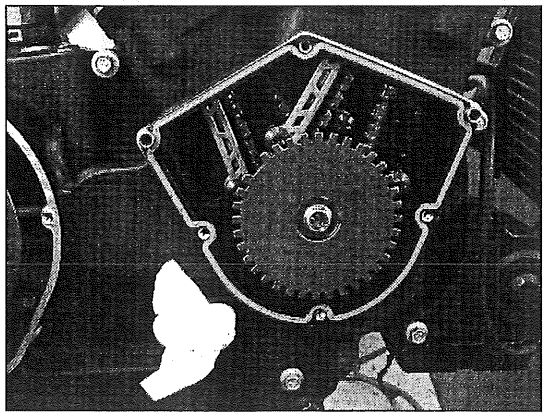

6. Rotate crankshaft (arrow) using Crankshaft Rotation Socket PV-48736 until key way is aligned with one of the TDC holes in crankcase.

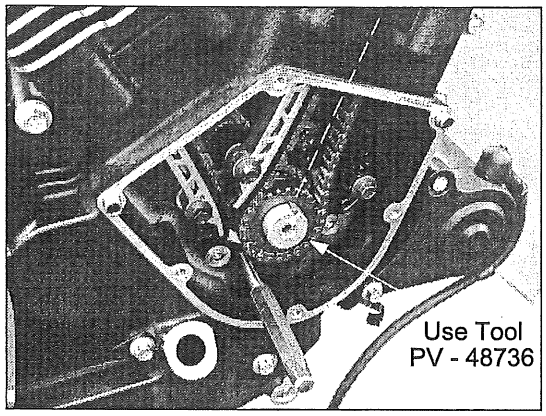

7. Insert an 8mm or 5/16² diameter pin into crankcase hole and into crankshaft to hold shaft while loosening sprocket nut.
8. Remove sprocket nut.
9. Loosen rear axle nut.
10. Loosen both axle adjusters an equal amount of turns.
11. Push wheel forward until belt is loose.
12. Pull belt off sprocket.
13. Remove front sprocket, spacer, and O-ring from output shaft.
14. If required, remove shaft seal using a suitable tool.

DRIVE SPROCKET INSPECTION

1. Visually inspect sprocket teeth (A) for excessive wear, foreign material damage.

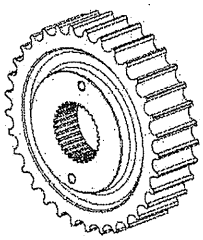

2. Inspect splines (B) for a tight fit on output shaft splines.
3. Inspect the back surface of sprocket hub (C) where it contacts the seal sleeve. Replace if worn or if surface is rough.
4. Inspect outer surface (D), inner surface (E), and sealing surface (F) of seal sleeve. Surfaces must be flat without wear or galling. Replace the sleeve if worn, or if the surface appears rough or chafed. The O-ring sealing surface of slightly chamfered edge must be smooth to seal the shaft.

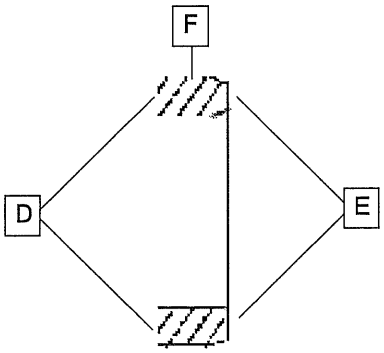

Seal Sleeve

DRIVE SPROCKET AND SEAL INSTALLATION

1. Apply grease to a new O-ring (G) and install on output shaft.
2. Install the shaft seal (if removed) using special tool PV-43505A.

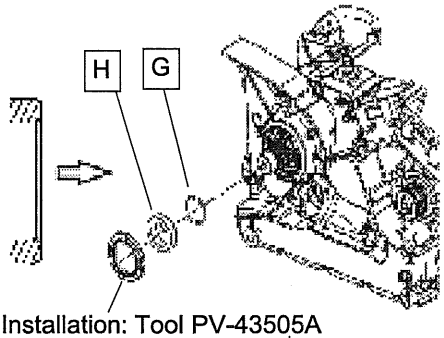

Installation: Tool PV-43505A

3. Install seal sleeve (H) with the chamfer on inside diameter of sleeve facing in, toward O-ring.
4. Clean shaft threads and sprocket nut to remove all previous thread locking agent and apply Loctite™ Primer N.

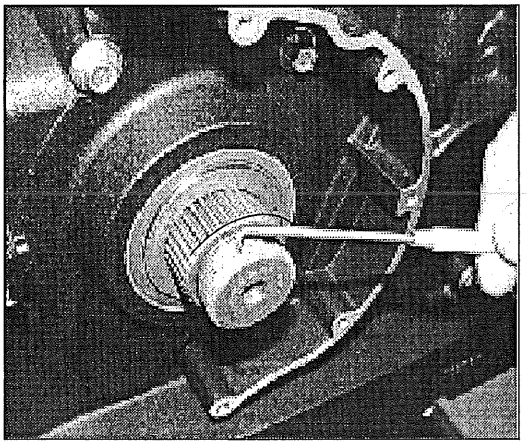

5. Apply a light film of anti-seize compound to splines of shaft. Place belt onto front sprocket, place sprocket over splines of output shaft.
6. Apply Loctite™ 262 to threads of shaft and nut.

7. Install drive sprocket nut.

NOTE

If primary side is *disassembled*, shift transmission into 5th gear and install clutch shaft holding tool PV-45028 on the clutch shaft to tighten sprocket nut.

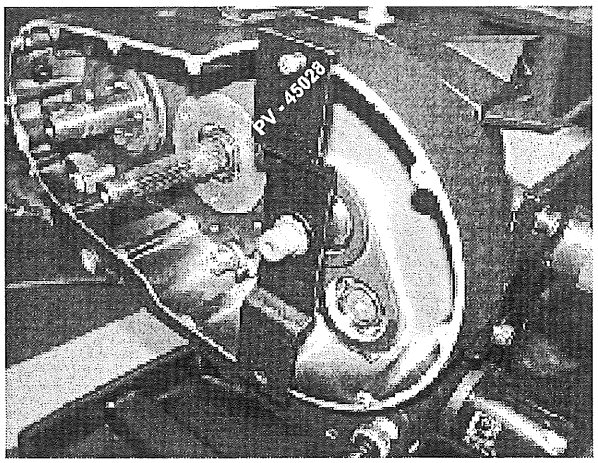

If primary side is *assembled*, follow instructions to hold shaft as described for *Drive Sprocket Removal* in this chapter.

8. Torque nut to specification.

TORQUE
Drive Sprocket Nut: **180 ft-lbs (244 Nm)**

9. Install lock plate.

NOTE

The lock plate can be installed in many positions and either side of the plate can be used. If the plate still does not align, tighten sprocket nut slightly and try to fit the lock plate again.

10. Install lock plate screws (A).

11. Rotate plate CLOCKWISE (B) until it stops and hold it firmly against the nut.

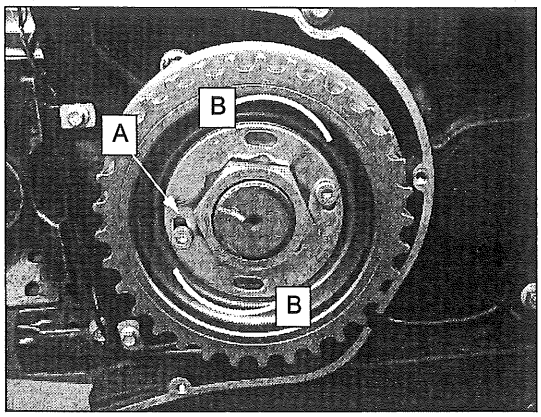

12. Tighten lock plate screws to specification.

TORQUE
Lock Plate Screws: **85 in-lb (10 Nm)**

13. After belt installation, adjust belt tension and wheel alignment. (see Drive Belt Adjustment / Alignment, page 2.28).

14. Install drive sprocket cover with a new gasket (adhesive side of gasket faces cover). Torque cover screws to specification.

TORQUE
Sprocket Cover Bolt: **85 in-lbs (10 Nm)**

15. Install / tighten exhaust. (see Assembly View - Exhaust Complete, page 3.46). Torque all fasteners to specification.

REAR SPROCKET

REAR SPROCKET REMOVAL

1. Remove rear wheel (see Rear Wheel Removal, page 13.9).
2. Loosen all sprocket bolts evenly in a star pattern and discard.
3. Remove sprocket.

CAUTION
Protect brake disc surface while working on wheel.

REAR SPROCKET INSPECTION

1. Visually inspect sprocket teeth (A) for excessive wear and damage from foreign material or road debris. Inspect hub (B) for cracks or damage.

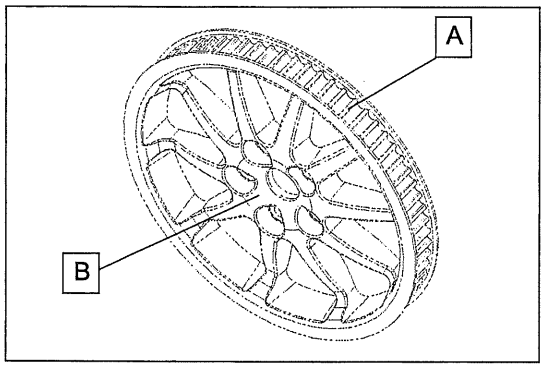

2. Visually inspect sprocket mounting surface on wheel for wear.

NOTE
If the drive system has been in service for 5000 miles or more, replace both front and rear sprockets along with the belt if any one item is damaged or worn beyond a normal polished appearance. Refer to Periodic Maintenance Interval Table, page 2.5 for drive system replacement interval.

3. Inspect sprocket mating surface (C) for galling, roughness, or cracks. Surface must be flat, with no burrs or surface irregularities.

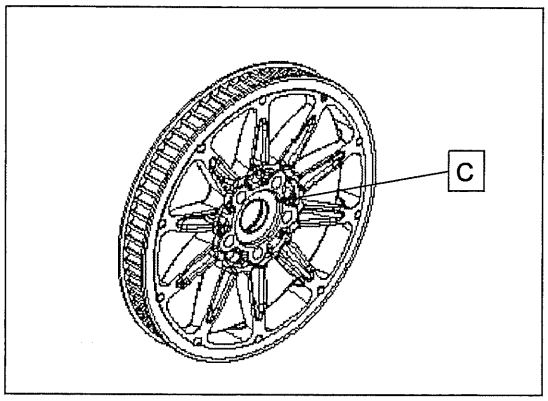

REAR SPROCKET INSTALLATION

1. Clean sprocket bolt threads in hub to remove all grease or oil residue.
2. Clean mating surfaces of wheel and sprocket.
3. Install sprocket with new bolts. Do not re-use sprocket bolts.
4. Torque bolts in a star pattern to specified torque.
5. Install rear wheel (see Rear Wheel Installation, page 13.16).

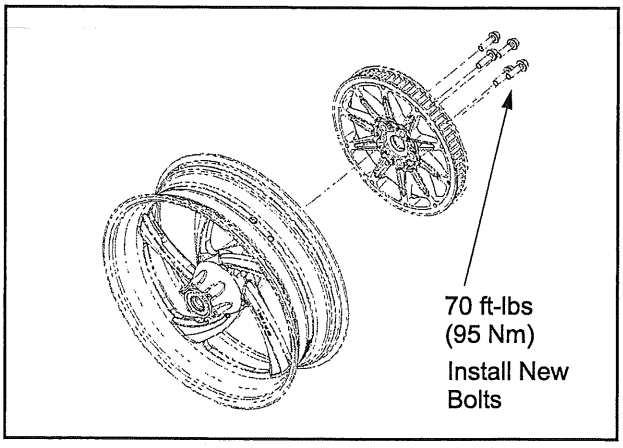

REVERSE SYSTEM

REVERSE DRIVE MECHANISM (IF EQUIPPED)

NOTE

See Reverse System Diagnostics, page 19.29 for reverse electrical system function, component location, and diagnostics. Maintenance (reverse idler shaft lubrication) is in Reverse System Fuse Location, page 11.14.

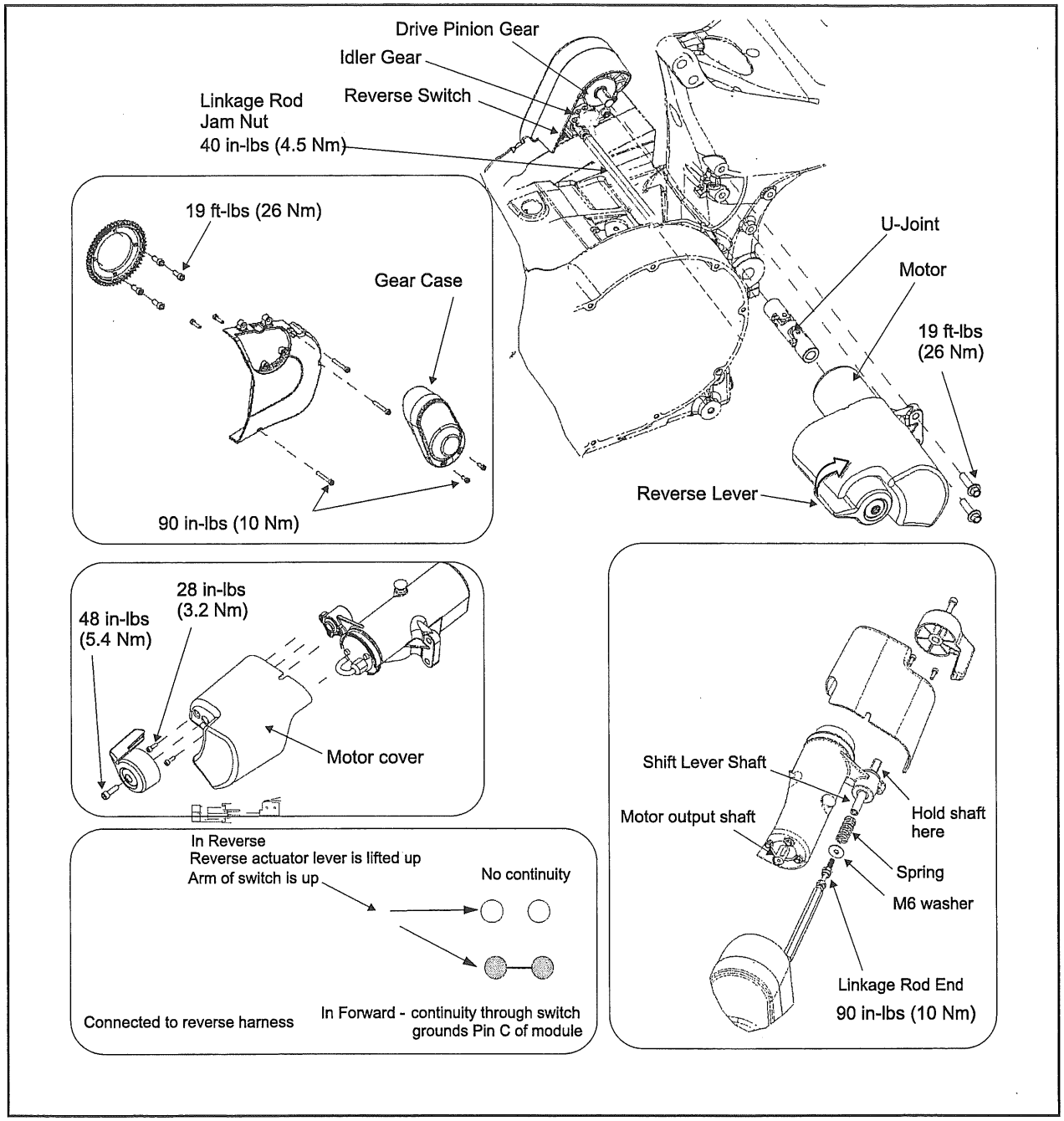

11

REVERSE GEAR CASE ASSEMBLY VIEW

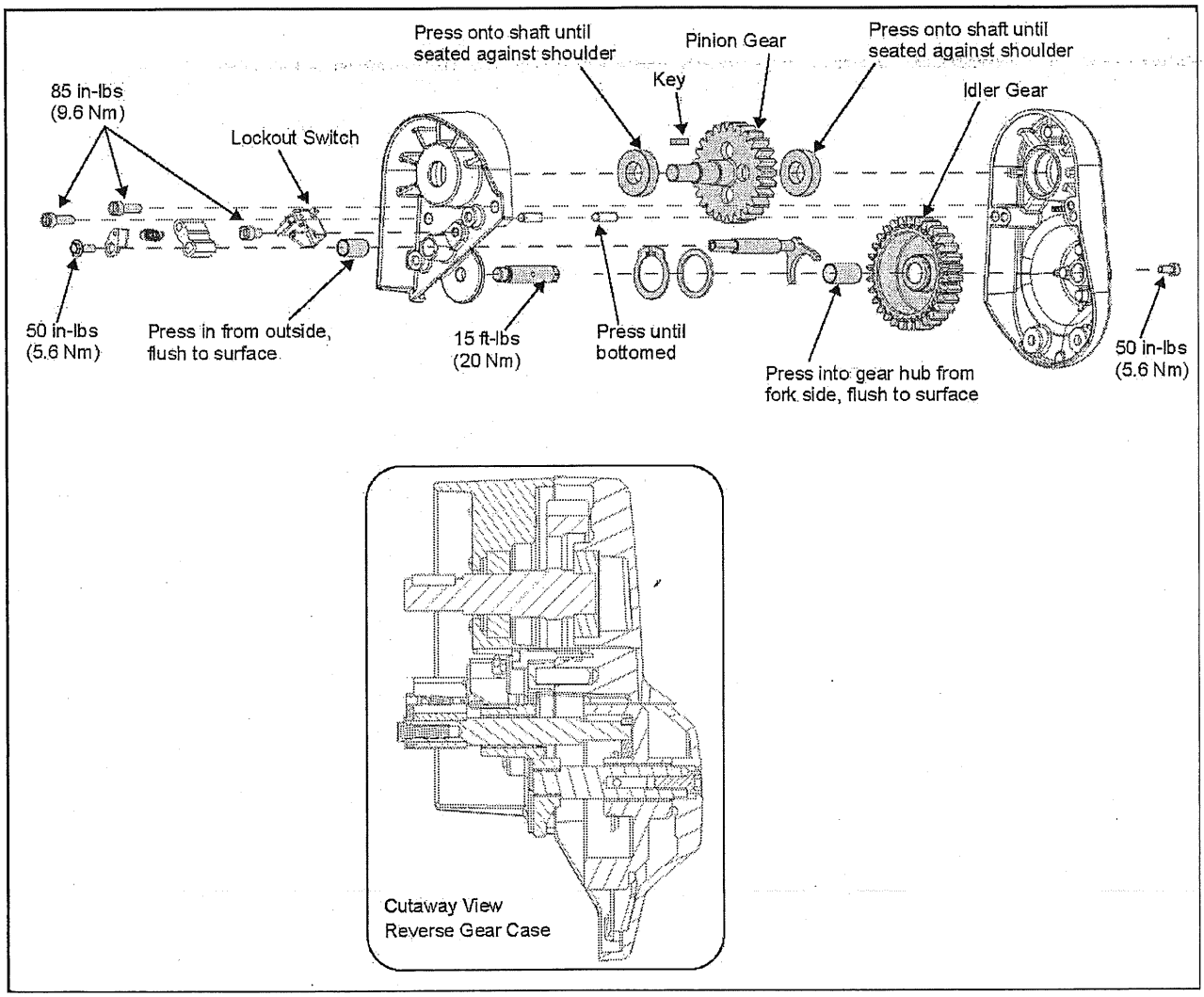

REVERSE LINKAGE ADJUSTMENT

Linkage Rod Adjustment

1. Remove reverse lever (A) and motor cover (B).

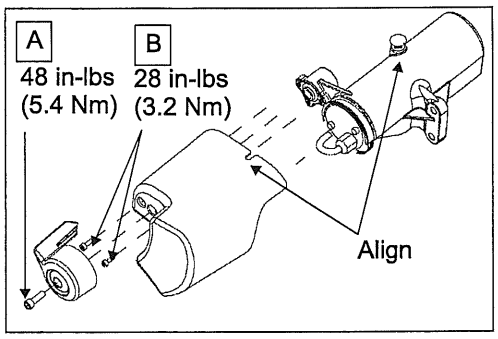

2. Be sure the reverse lever is down (rotated fully counterclockwise).

3. Hold linkage rod (C) and loosen jam nut (D).

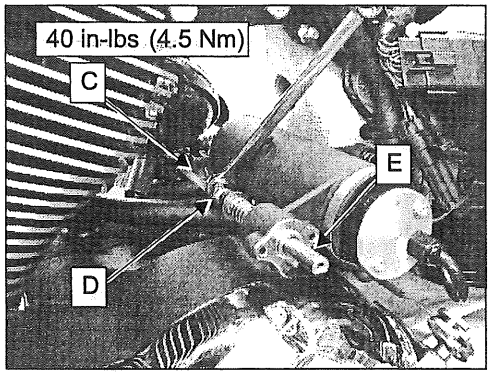

4. Temporarily place reverse lever on lever shaft (E).
5. Verify linkage rod ball joint (F) is tightened securely to lever shaft (that it did not come loose when jam nut was loosened in Step 3). If ball joint is loose, hold lever and tighten ball joint to lever shaft.

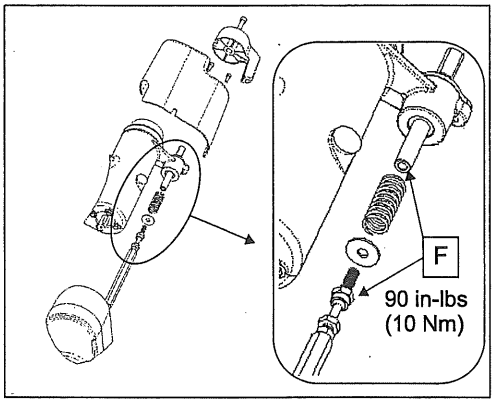

6. Rotate linkage rod to lengthen it until reverse idler gear lightly bottoms out against gearcase cover. Be sure lever shaft does not begin to rotate off the fully DOWN position.

NOTE

If linkage rod rotated past the point at which the gear is bottomed in the cover, the reverse lever will begin to rotate upward. If lever move upward, shorten linkage rod until reverse lever is down, then repeat adjustment.

7. When adjustment is correct, hold linkage rod and tighten jam nut firmly against *linkage rod*. Tighten jam nut.
8. Temporarily install the reverse lever and test the reverse actuation. Lever should return to a horizontal position when disengaged.
9. Re-assemble cover and reverse lever. Hold lever by hand to prevent rotation while tightening screw.
10. Perform Reverse System Test.

REVERSE SYSTEM TEST

1. Seated in a normal riding position on motorcycle, place transmission in Neutral and move reverse lever to the DOWN position (reverse disengaged).
2. Start engine and let it idle.
3. *Slowly* lift reverse lever toward UP (Reverse) position, while watching the gear position indicator on the instrument panel ("N"). The lever should move at least 1/4 inch (6mm) and *no more than 1/2 inch (12mm)* before the gear position indication changes to an "R" (a slight delay in the display is normal).

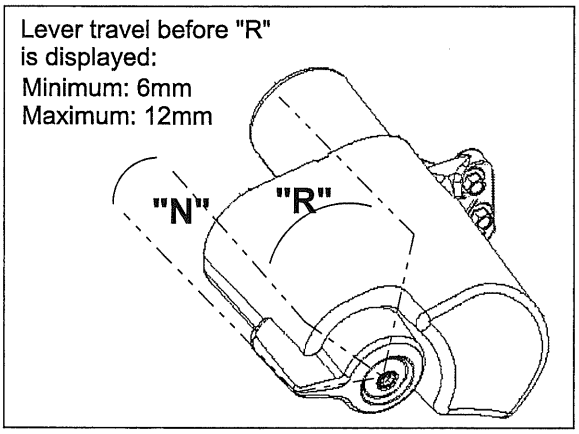

4. Lift reverse to fully UP (Reverse) position. Press the starter button. The motorcycle should move in reverse.
5. With Reverse engaged (reverse lever UP) pull in the clutch and place the transmission in any gear. The engine should stop immediately.
6. Return lever to Forward (down) position. Verify the engine will start, and that does not stop when the transmission is shifted into gear.
7. If reverse system does not operate properly as described above, see Reverse System Diagnostics beginning on Reverse System Diagnostics, page 19.29.

REVERSE SYSTEM FUSE LOCATION

1. Remove the left hand saddlebag.
2. Remove left hand side cover.
3. Locate the Reverse System fuse harness and, gently lifting the seat skirt, withdraw the Fuse receptacle.

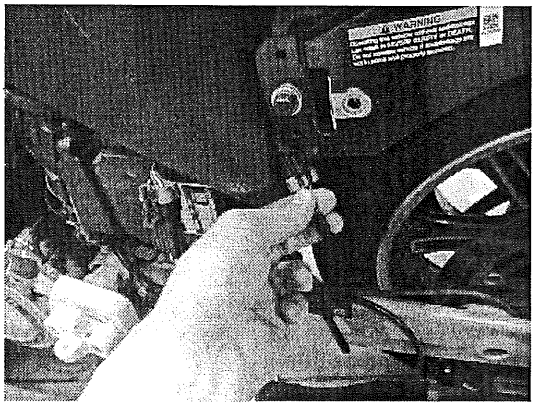

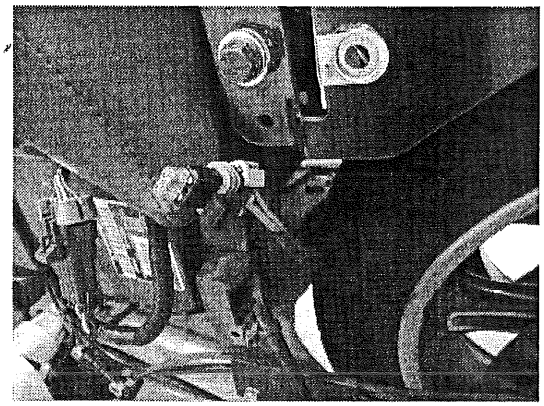

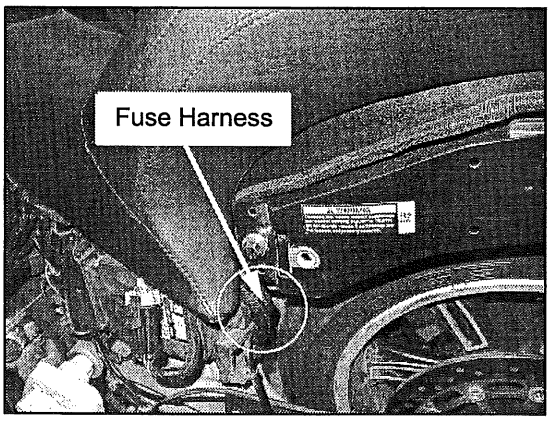

Reverse System: 25A Fuse

REVERSE COUPLER SHAFT KEY REPLACEMENT

The reverse gear drive shaft (coupler) has an inner and an outer drive key. If the reverse motor turns but the motorcycle does not move in reverse gear, inspect both drive keys on the shaft.

1. Remove reverse lever.
2. Remove reverse motor cover.
3. Hold linkage rod (A) and loosen jam nut (B). Do not loosen or remove ball joint at reverse lever shaft (C).

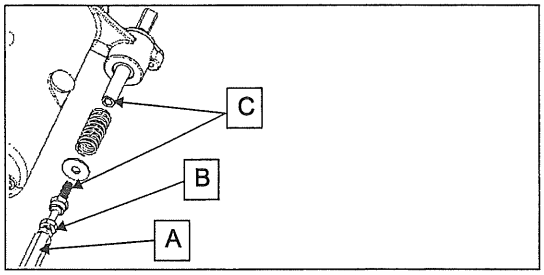

4. Disconnect reverse motor wire harness and reverse switch wire connector.
5. Remove motor mount bolts.
6. Rotate linkage rod to unscrew the ball joint while moving the motor outward until linkage rod is separated from ball joint.
7. Pull motor outward to separate coupler from gear shaft or motor shaft. Set motor assembly aside.
8. Pull coupler off motor shaft (or gear shaft).
9. Inspect drive key at each end and replace if damaged.
10. Lubricate coupler shaft with Moly Assembly Paste (PN 2871460) and install coupler shaft on gear shaft.
11. Install motor, routing the wire harness smoothly to the connector, away from mounting boss or moving parts.
12. Screw ball joint into linkage rod and engage motor end of coupler shaft, aligning key with key way.
13. Start motor mounting bolts and tighten lightly by hand. Continue to adjust linkage rod until motor mount tabs mate squarely with the mounting boss on the frame.

NOTE

Be sure motor is flush with frame before tightening mount bolts!

14. Assemble remaining parts in reverse order of disassembly (see Reverse Drive Mechanism (If Equipped), page 11.11 for fastener torques).
15. Adjust reverse linkage (Reverse Linkage Adjustment, page 11.12) and perform a system test (Reverse System Test, page 11.14).

TROUBLESHOOTING

TROUBLESHOOTING FINAL DRIVE

PROBLEM	POSSIBLE CAUSE	POSSIBLE REPAIR NEEDED
Belt Shows Excessive Wear On One Side	Out-of-Alignment	Align rear wheel
Belt Squeal / Noise	Belt too tight	Adjust to 32mm Deflection @ 10 lbs load
	Out-of-Alignment	Align rear wheel
Broken Sprocket Teeth	Foreign material damage Loose drive belt or sprocket	Replace parts or repair as necessary
Broken or Torn Cogs on Belt	Foreign material damage, loose belt or sprocket	Replace parts as necessary
Belt Jumps Sprocket Teeth	Worn, damaged or out of adjustment belt or sprockets	Replace parts as necessary
	Belt Loose	Adjust Belt
Excessive Wear, Binding Suspension	Belt Tight	Adjust Belt
Broken Belt	Belt weakened by foreign material damage. Belt run excessively tight or loose for extended period	Replace Belt, Replace Sprockets
Reverse / Starter Motor Inoperative		See Electrical Chapter
Reverse Motor Turns But Vehicle Does Not Move	Reverse drive key(s) sheared.	Remove drive motor with shaft and replace key(s).

CHAPTER 12
FRONT WHEEL / SUSPENSION

GENERAL....12.3
IMPORTANT INFORMATION....12.3
SPECIAL TOOLS....12.3
MAINTENANCE PRODUCTS....12.3
FASTENER TORQUE SPECIFICATIONS....12.3
SPECIFICATIONS....12.4
ASSEMBLY VIEWS / TORQUE....12.6
HANDLEBAR CONTROLS: CROSS COUNTRY ASSEMBLY VIEW....12.6
HANDLEBAR / HANDLEBAR RISER: CROSS COUNTRY / MAGNUM ASSEMBLY VIEW....12.7
CLUTCH CABLE / LEVER PERCH ASSEMBLY VIEW: CROSS COUNTRY / MAGNUM....12.8
FRONT FORK ATTACHMENTS: CROSS COUNTRY / MAGNUM....12.9
FORK ASSEMBLY - CROSS COUNTRY / ROADS....12.10
FORK ASSEMBLY - MAGNUM / X-1....12.11
FRONT AXLE ASSEMBLY VIEW: CROSS COUNTRY / MAGNUM ASSEMBLY VIEW....12.13
FORK TUBE INSTALLATION STEPS: CROSS COUNTRY / MAGNUM....12.14
STEERING HEAD ADJUSTMENT / TOP TRIPLE CLAMP: CROSS COUNTRY / MAGNUM....12.15
CAST FRONT WHEEL ASSEMBLY VIEW — CROSS COUNTRY / MAGNUM....12.16
BILLET FRONT WHEEL ASSEMBLY VIEW - MAGNUM / X-1....12.17
SPOKED FRONT WHEEL ASSEMBLY VIEW....12.18
SERVICE PROCEDURES....12.19
HANDLEBAR REMOVAL (ALL MODELS)....12.19
CLUTCH CABLE....12.22
THROTTLE CABLE....12.23
FRONT WHEEL REMOVAL....12.26
FRONT AXLE INSPECTION....12.26
FRONT WHEEL INSPECTION....12.26
BRAKE DISC REMOVAL....12.27
BRAKE DISC INSTALLATION....12.27
FRONT WHEEL BEARING INSPECTION....12.27
FRONT WHEEL BEARING REMOVAL (TYPICAL)....12.28
FRONT WHEEL BEARING INSTALLATION....12.28
FRONT FORK REMOVAL....12.30
FRONT FORK TUBE INSTALLATION....12.31
FRONT FORK DISASSEMBLY....12.31
FORK SEAL REMOVAL / TUBE DISASSEMBLY....12.34
FRONT FORK INSPECTION....12.36
FRONT FORK TUBE ASSEMBLY....12.37
FORK OIL FILLING / LEVEL SETTING....12.39
TRIPLE CLAMP REMOVAL....12.42
STEERING HEAD BEARING INSPECTION (TRIPLE CLAMP REMOVED)....12.43
TRIPLE CLAMP INSTALLATION....12.44
STEERING HEAD BEARING REPLACEMENT....12.46

STEERING HEAD BEARING ADJUSTMENT 12.48
HEATED GRIPS 12.49
TROUBLESHOOTING 12.50

GENERAL

IMPORTANT INFORMATION

⚠ WARNING

Victory motorcycles are produced using the designated tires listed as original equipment. This includes field testing to ensure stability and superior handling. The use of tires other than original equipment may cause instability which could lead to a crash, resulting in serious injury or death. Use *only* the recommended tires inflated to the recommended tire pressures based on load conditions as listed on the tire inflation decal. Tubeless tires are used on certain Victory models. Operating the motorcycle with damaged rims creates a safety hazard including air pressure loss, steering imbalance and/or reduced steering control. Do not attempt to repair or straighten damaged rims.

CAUTION

Work performed to the front end of the motorcycle usually involves supporting the machine with the front end elevated. Take precautions so that the motorcycle is securely supported when the front tire is off the ground. This reduces the possibility of personal injury or damage to the motorcycle.

Leaking front fork seals are a safety hazard and should be replaced immediately if a leak is found. Fork oil could contaminate front brake components which could reduce stopping ability of the motorcycle. Contaminated brake discs or pads greatly reduce stopping force available & increase stopping distance. Brake discs can be cleaned using Victory brake cleaner. NEVER attempt to clean contaminated brake pads. Replace pads as a set.

- Refer to Chapter 2 for **MAINTENANCE** of front end components.
- Refer to Chapter 14 for **TIRE REMOVAL, REPAIR, & BALANCING**
- Refer to Chapter 15 for **BRAKE SYSTEM** service and repairs and **HYDRAULIC CLUTCH SYSTEM BLEEDING.**

SPECIAL TOOLS

SPECIAL TOOL	PART NUMBER
Fork Spring Compressor	PV-49463
Fork Spring Compressor Adaptor	PV-49464
Damper Rod Extension Tool	PV-49453
Cartridge Holder	PV-49452
Fork Oil Level Tool	PV-59000-A
Fork Seal Driver	PV-47035
Fork Seal Guide	PV-47037
Wheel Bearing / Stem Bearing Race Installation Set	PV-43515
Spanner Socket (Steering Stem)	PV-43508
Spanner Wrench (Steering Stem)	PV-43509

MAINTENANCE PRODUCTS

Hand Grip Adhesive - Three Bond 1501 (10ml tube)	2872575
Fork Oil, KYB Inverted Cartridge	2877421

Refer to Chapter 2 for a list of maintenance products and part numbers.

FASTENER TORQUE SPECIFICATIONS

Refer to Assembly Views for fastener torque specifications.

SPECIFICATIONS

Cross Country

ITEM		STANDARD	SERVICE LIMIT
Axle Runout		-	0.20 mm (0.008")
Front Wheel Runout Billet and Cast Type (Spoked Type) 3.5" x 18"	Axial	0.50 mm (0.020")	2.0 mm (0.080") (0.80 mm (0.031"))
	Radial	0.50 mm (0.020")	2.0 mm (0.080") (0.80 mm (0.031"))
Fork Spring Free Length (Top Spring)		247.6 mm (9.75")	243.0 mm (9.57")
Fork Spring Free Length (Bottom Spring)		158.75 mm (6.25")	154.75 mm (6.05")
Fork Spring Pre-Load (Total)		58 mm (2.283")	
Fork Spring Rate (Top Spring)		20.7 N/mm (118 lb./inch)	
Fork Spring Rate (Bottom Spring)		10.6 N/mm (60 lb./inch)	
Fork Tube Diameter (Inner Tube)		43 mm	Not Applicable
Fork Tube Runout		-	0.20 mm (0.008")
Fork Oil Type / Weight	Victory Fork Oil (YELLOW) P/N 2877421		
Fork Oil Level From Top of Tube (Springs and spring guides removed, tube fully compressed, cartridge rod at bottom of travel)		106 mm (4.17")	±1 mm (±0.040")
Fork Oil Volume (per leg, dry)	NOTE: Oil level must be measured and adjusted to specification	481cc (± 3 cc) (16.27 fl.oz. (± 0.10 fl. oz.)	Not Applicable
Steering Bearing Adjustment	Refer to Steering Head Adjustment / Top Triple Clamp: Cross Country / Magnum, page 12.15 or Triple Clamp Installation, page 12.44		

Magnum

ITEM		STANDARD	SERVICE LIMIT
Axle Runout		-	0.20 mm (0.008")
Front Wheel Runout Billet and Cast Type 3.5" x 21"	Axial	0.50 mm (0.020")	0.20 mm (0.008") (0.80 mm (0.031"))
	Radial	0.50 mm (0.020")	0.20 mm (0.008") (0.80 mm (0.031"))
Fork Spring Free Length (Top Spring)		115 (4.53")	110.4 mm (4.35")
Fork Spring Free Length (Bottom Spring)		260 (10.24")	256 mm (10.08")
Fork Spring Pre-Load (Total) at Free length		17 (0.67")	
Fork Spring Rate (Top Spring)-2 Rate		26.5 N/mm (151.32 lb./inch)	
Fork Spring Rate (Bottom Spring)			9.5 N/mm (54.25 lb./inch)
Fork Tube Diameter (Inner Tube)		43 mm	Not Applicable
Fork Tube Runout		-	0.20 mm (0.008")
Fork Oil Type / Weight	Victory Fork Oil (YELLOW) P/N 2877421		
Fork Oil Level From Top of Tube (Springs and spring guides removed, tube fully compressed, cartridge rod at bottom of travel)		97 mm (3.82")	±1 mm (±0.040")
Fork Oil Volume (per leg, dry)	NOTE: Oil level must be measured and adjusted to specification	515 cc (± 3 cc) (18.13 fl.oz. (± 0.10 fl.oz.)	Not Applicable
Steering Bearing Adjustment	Refer to Steering Head Adjustment / Top Triple Clamp: Cross Country / Magnum, page 12.15 or Triple Clamp Installation, page 12.44		

ASSEMBLY VIEWS / TORQUE

HANDLEBAR CONTROLS: CROSS COUNTRY ASSEMBLY VIEW

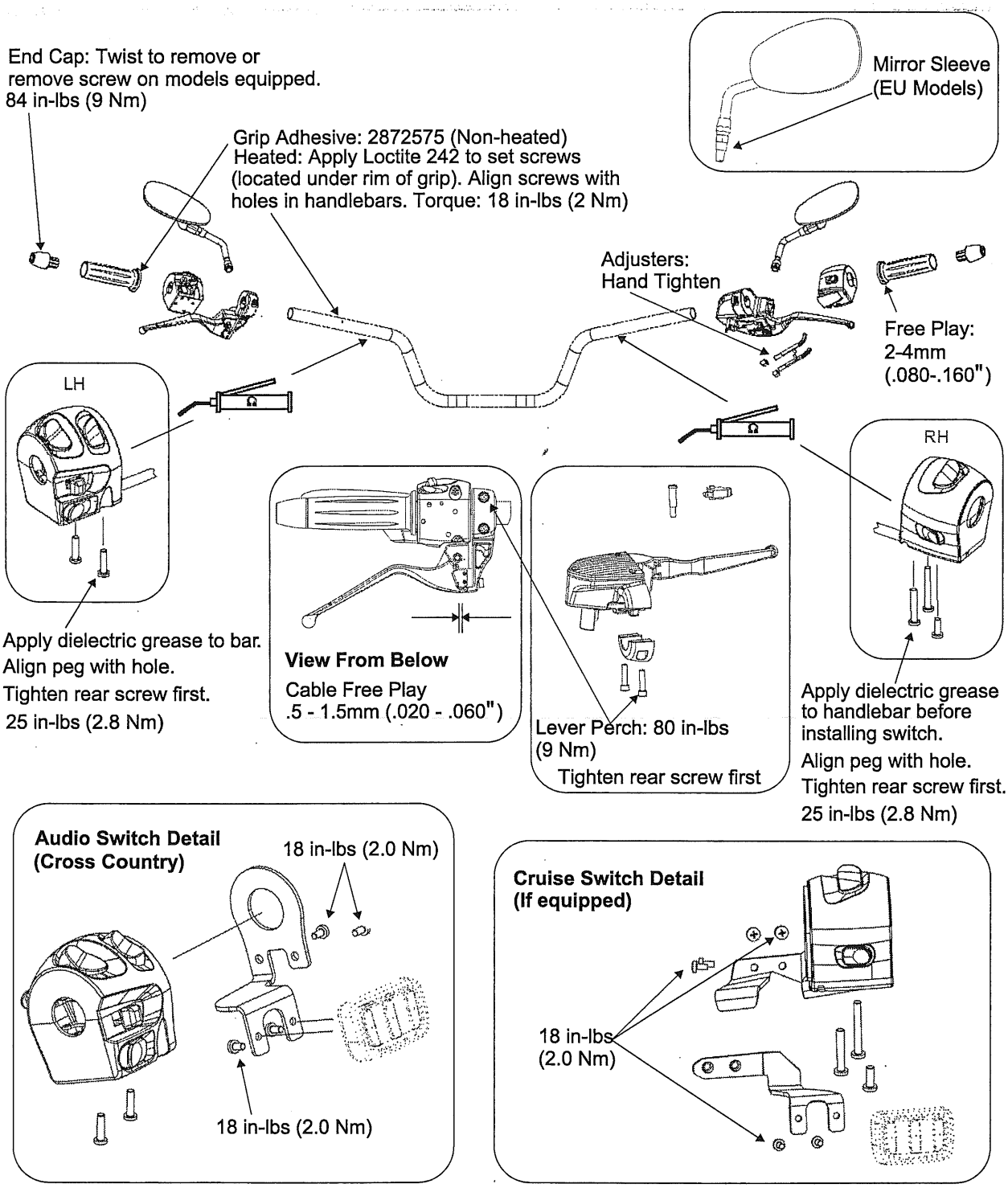

HANDLEBAR / HANDLEBAR RISER: CROSS COUNTRY / MAGNUM ASSEMBLY VIEW

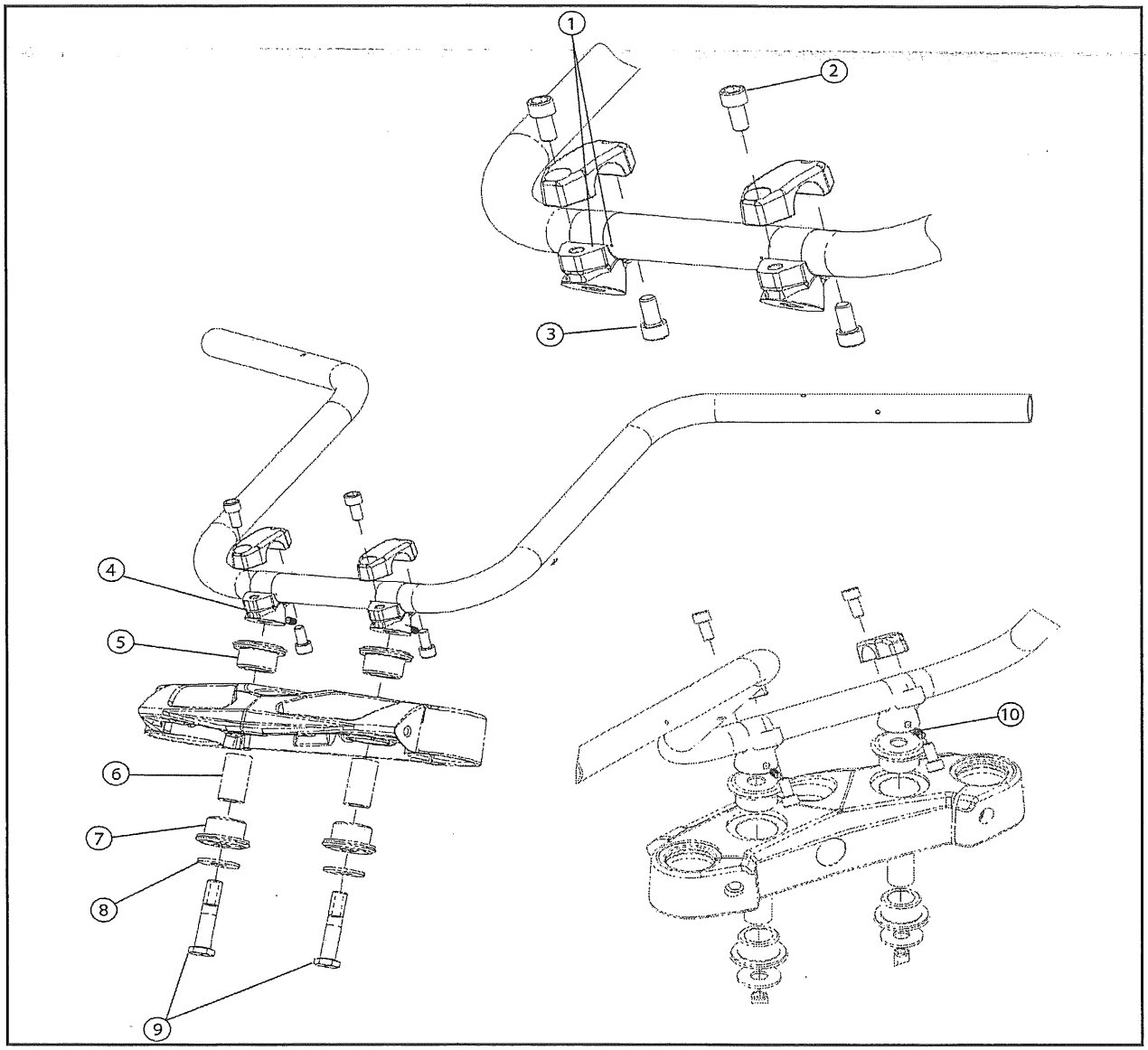

REF	NOTES
① Cap Surface, Dot	Align dot with cap surface.
② Front Screw	Tighten front screw first. Torque to 22 ft-lbs (30 Nm).
③ Screw	Torque to 22 ft-lbs (30 Nm).
④ Riser	
⑤ Isolator	
⑥ Sleeve	
⑦ Isolator	
⑧ Washer	
⑨ Riser Bolts	Torque to 60 ft-lbs (81 Nm).
⑩ Screw	Tighten screw until it stops against riser bolt, then tighten an additional 1/4 turn.

CLUTCH CABLE / LEVER PERCH ASSEMBLY VIEW: CROSS COUNTRY / MAGNUM

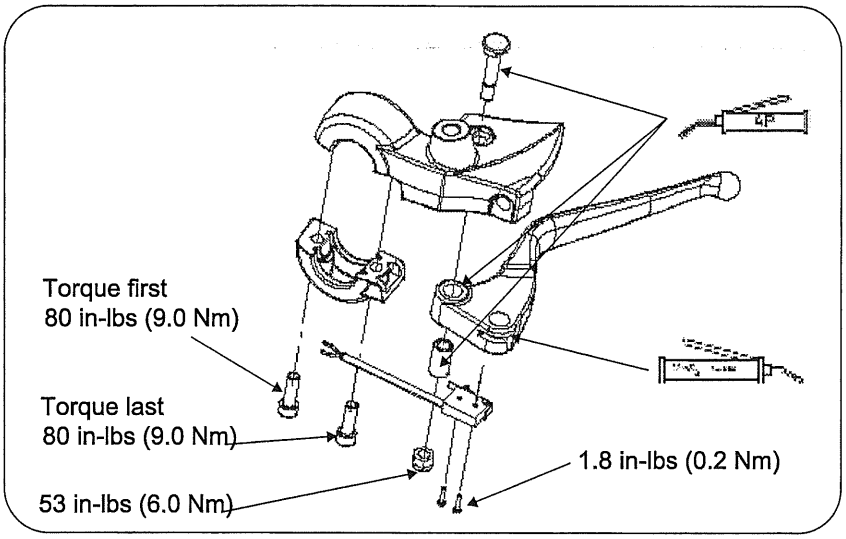

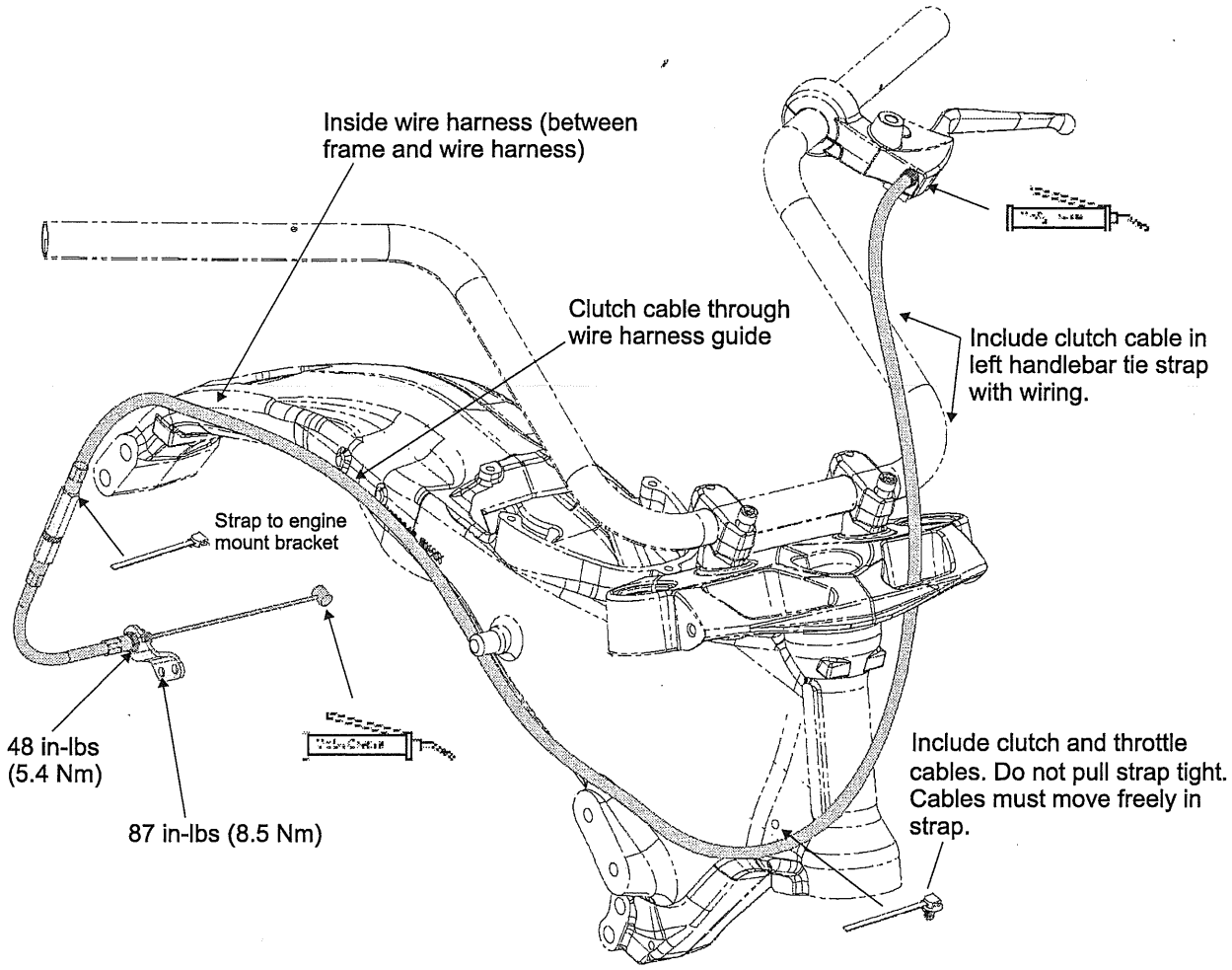

FRONT FORK ATTACHMENTS: CROSS COUNTRY / MAGNUM

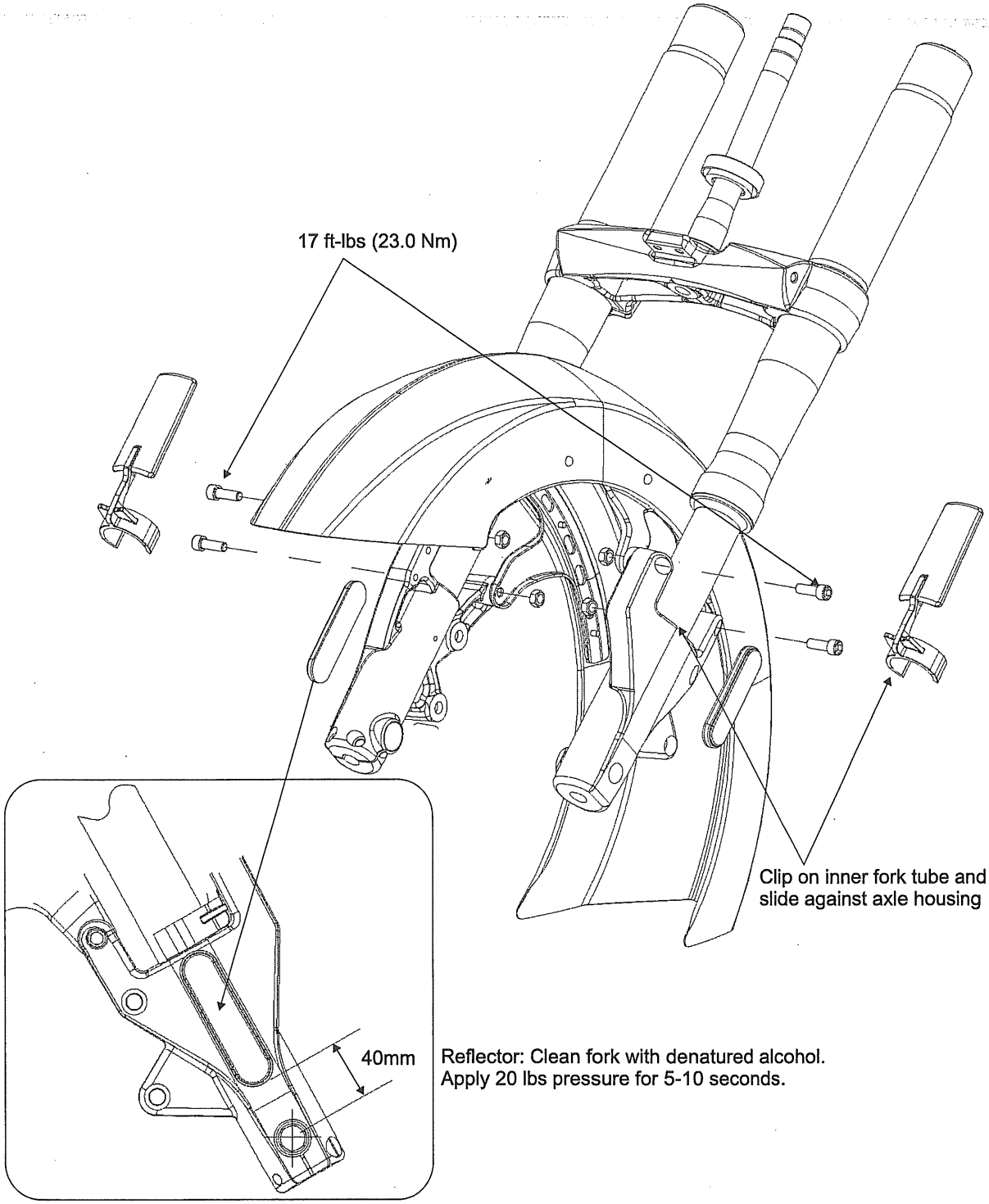

Reflector: Clean fork with denatured alcohol.
Apply 20 lbs pressure for 5-10 seconds.

FORK ASSEMBLY - CROSS COUNTRY / ROADS

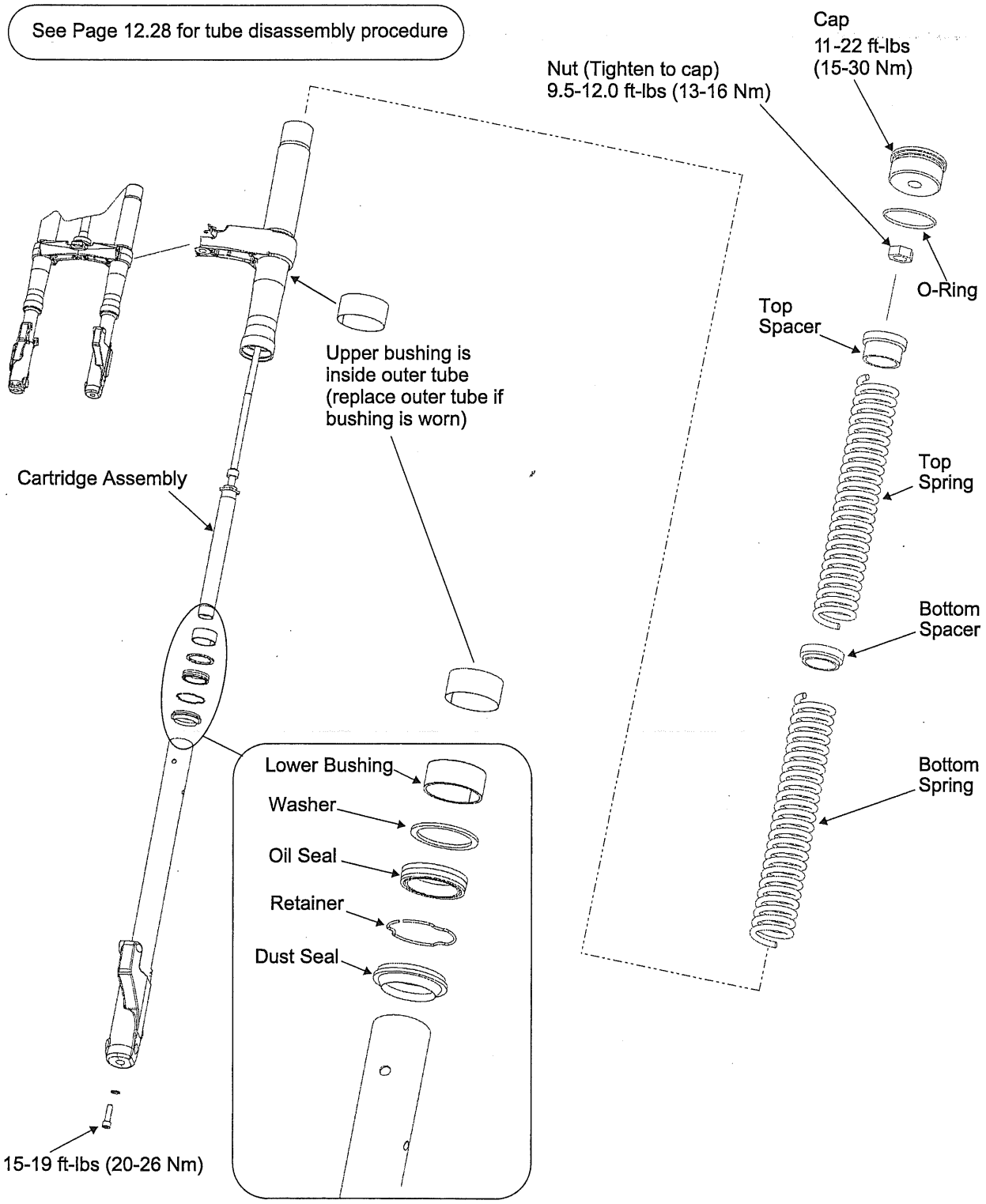

FORK ASSEMBLY - MAGNUM / X-1

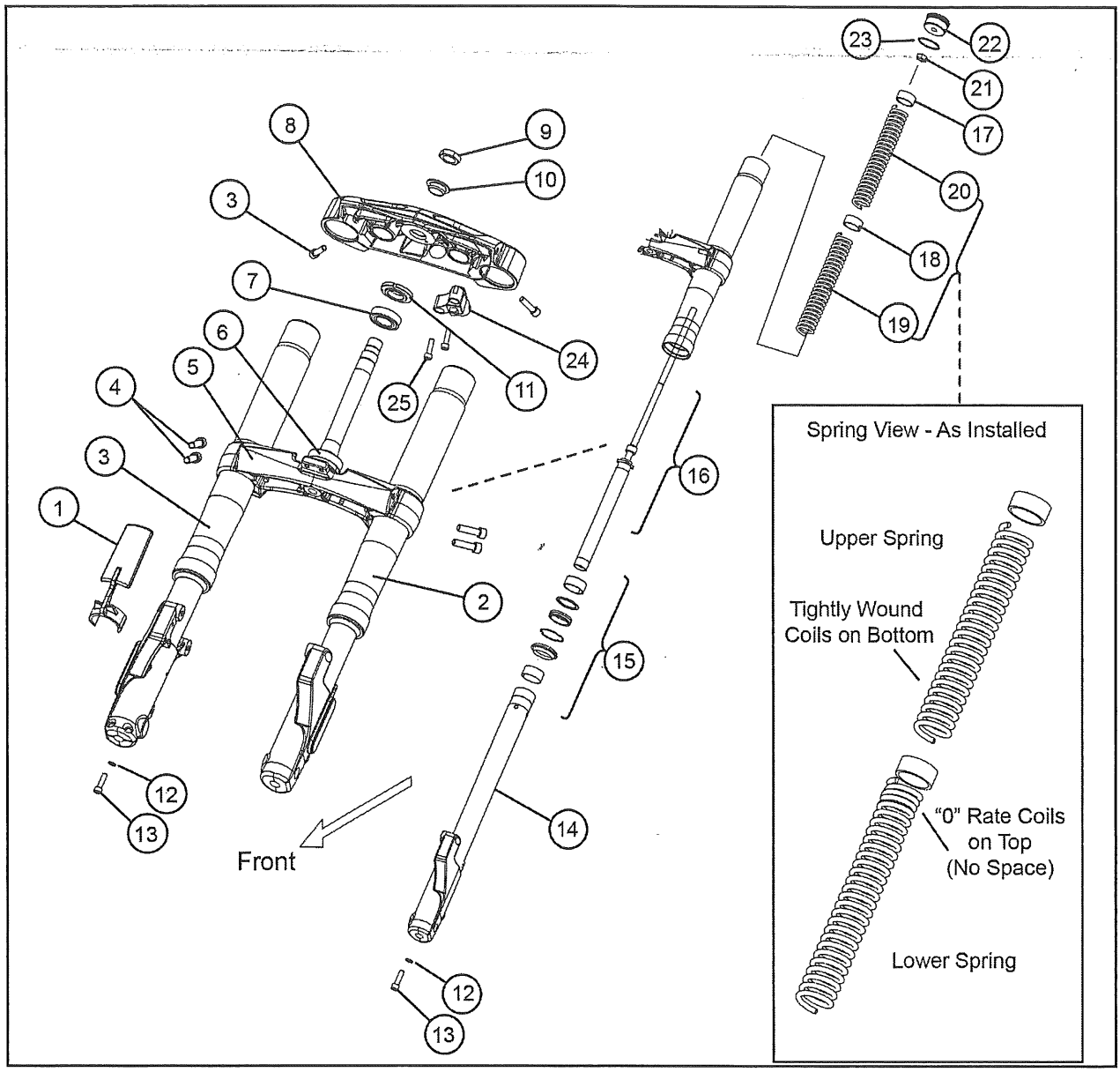

① Fork Guard	⑭ Fork Tube, Inner LH
② Fork Leg Assembly, LH	⑮ Seal and Bushing Assembly
③ Fork Leg Assembly, RH	⑯ Cartridge
④ Screw, Lower Triple Clamp	⑰ Spring Guide, Upper
⑤ Lower Triple Clamp Assembly	⑱ Spring Guide, Lower
⑥ Bearing, Needle	⑲ Spring, Lower

⑦ Bearing, Ball	⑳ Spring, Upper
⑧ Upper Triple Clamp Assembly	㉑ Nut
⑨ Nut, Top, Triple Clamp	㉒ Cap
⑩ Spacer, Steering	㉓ Seal, O-Ring
⑪ Nut, Steering Head	㉔ Fork Lock Assembly
⑫ Sealing Washer	㉕ Screw, Fork Lock
⑬ Bolt, Retainer	

FRONT AXLE ASSEMBLY VIEW: CROSS COUNTRY / MAGNUM ASSEMBLY VIEW

FRONT WHEEL INSTALLATION

1

Grease axle and threads. Do not grease the clamp surface of the right end.

2

Install axle through right fork, right spacer, wheel, left spacer. Screw axle into left fork leg.

3

Tighten axle.
52 ft-lbs (70 Nm)

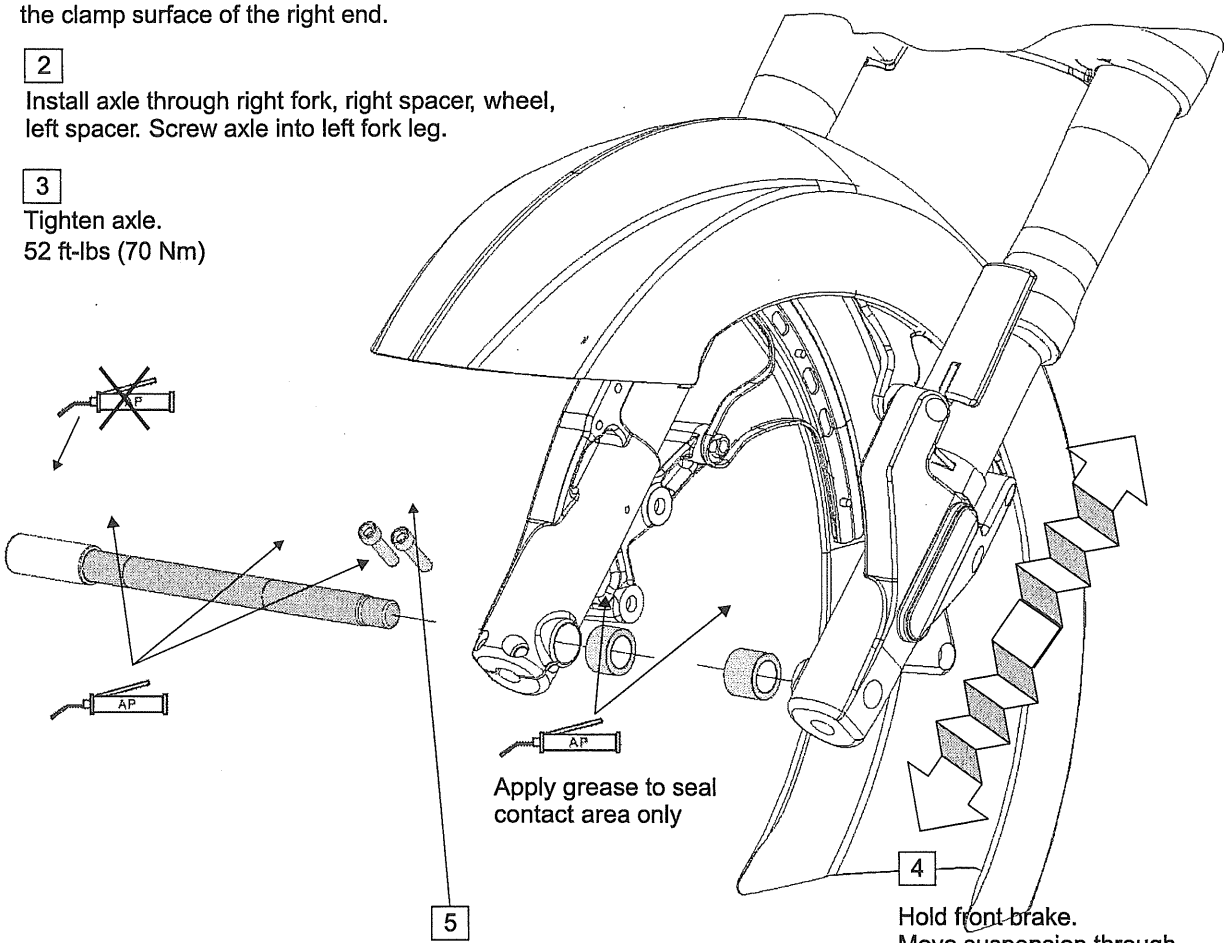

5

Tighten pinch bolts.
18 ft-lbs (24 Nm)

6

Repeat pinch bolt torque.

12

FORK TUBE INSTALLATION STEPS: CROSS COUNTRY / MAGNUM

FORK TUBE INSTALLATION

Note: Adjust steering head (page 12.11) prior to installing fork tubes.

1. Install tubes to proper height (Fig.1) or install left and right fork tubes to same height in top clamp measured as shown in Photo 1 below.
2. Tighten bottom bolts on lower triple clamp
3. Tighten top bolts on lower triple clamp
4. Repeat Step 2 & Step 3
5. Tighten upper triple clamp bolts

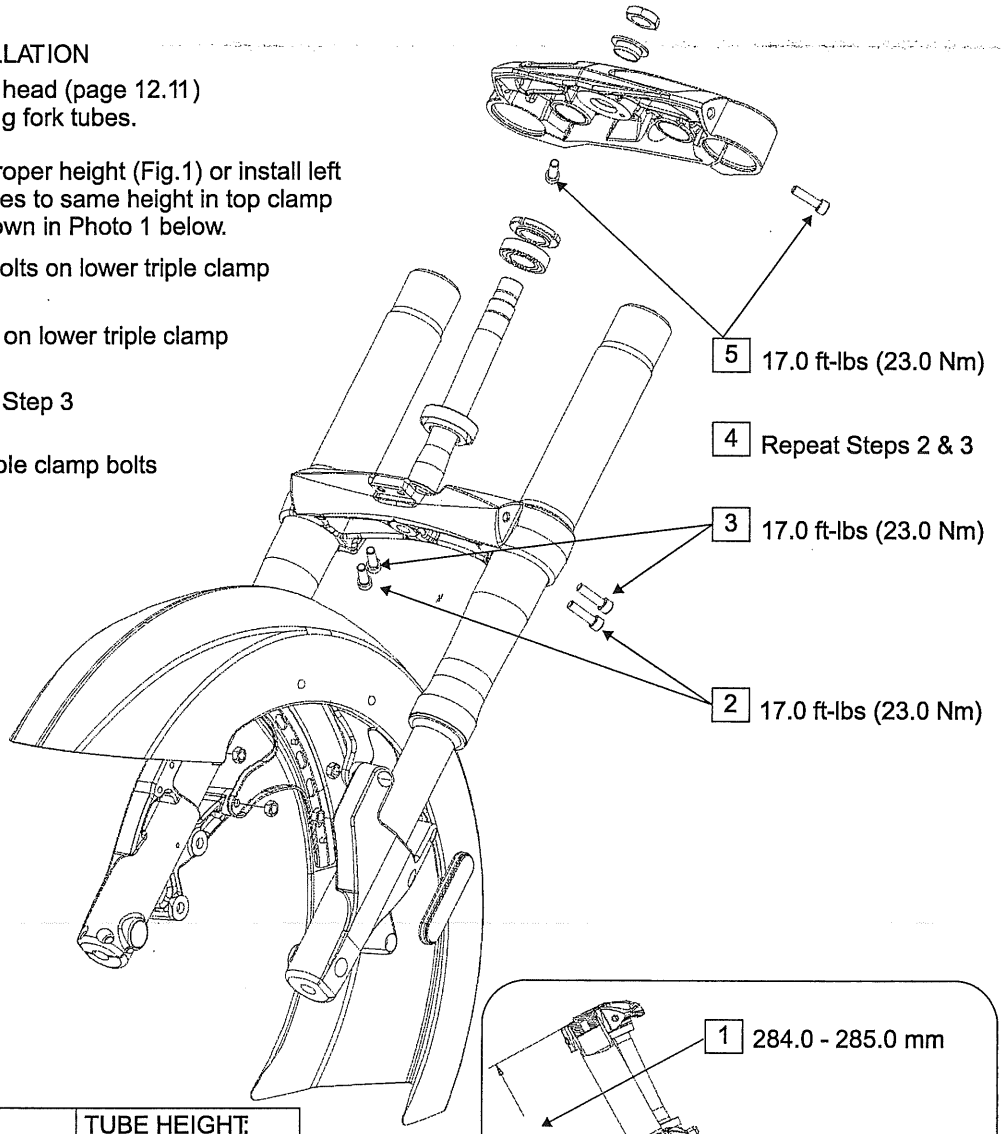

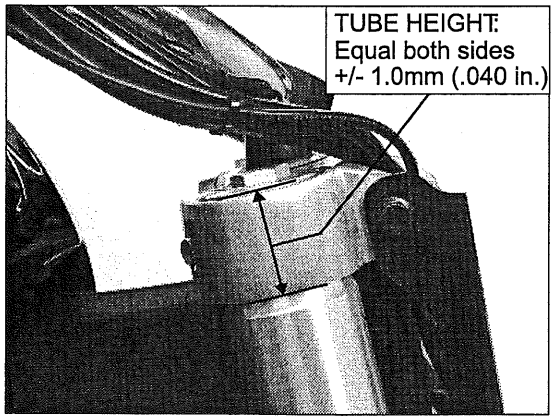

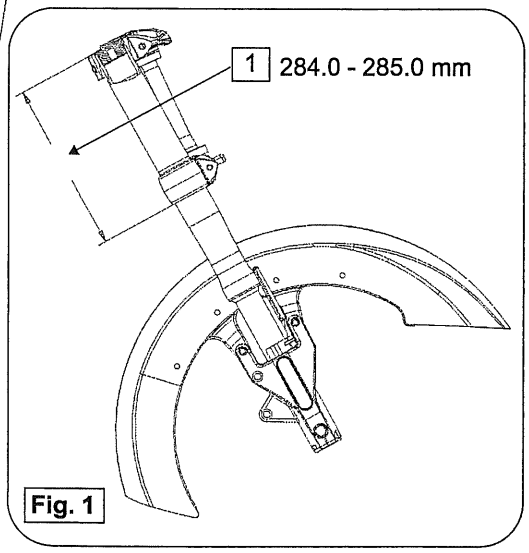

Fig. 1

STEERING HEAD ADJUSTMENT / TOP TRIPLE CLAMP: CROSS COUNTRY / MAGNUM

STEERING HEAD BEARING ADJUSTMENT / TOP TRIPLE CLAMP INSTALLATION*

1. Grease lower bearing and install lower triple clamp to steering head.
2. Install top bearing and steering stem adjustment nut finger tight.
3. Turn lower clamp fully right against steering stop and torque stem nut to 29.0 ft-lbs (39.3 Nm).
4. Turn steering assembly fully left and back to full right 5 times.
5. Turn lower clamp fully left against stop.
6. Place a mark or tape on frame, in direct alignment with one of the slots of the adjuster nut.
7. Loosen adjuster nut 90 degrees (a new slot of nut should now be aligned with the mark or tape placed on the frame in Step 6).
8. Install upper triple clamp and spacer.
9. Grease threads of stem and install crown nut.
10. Torque nut to 72.0 ft-lbs (97.6 Nm).

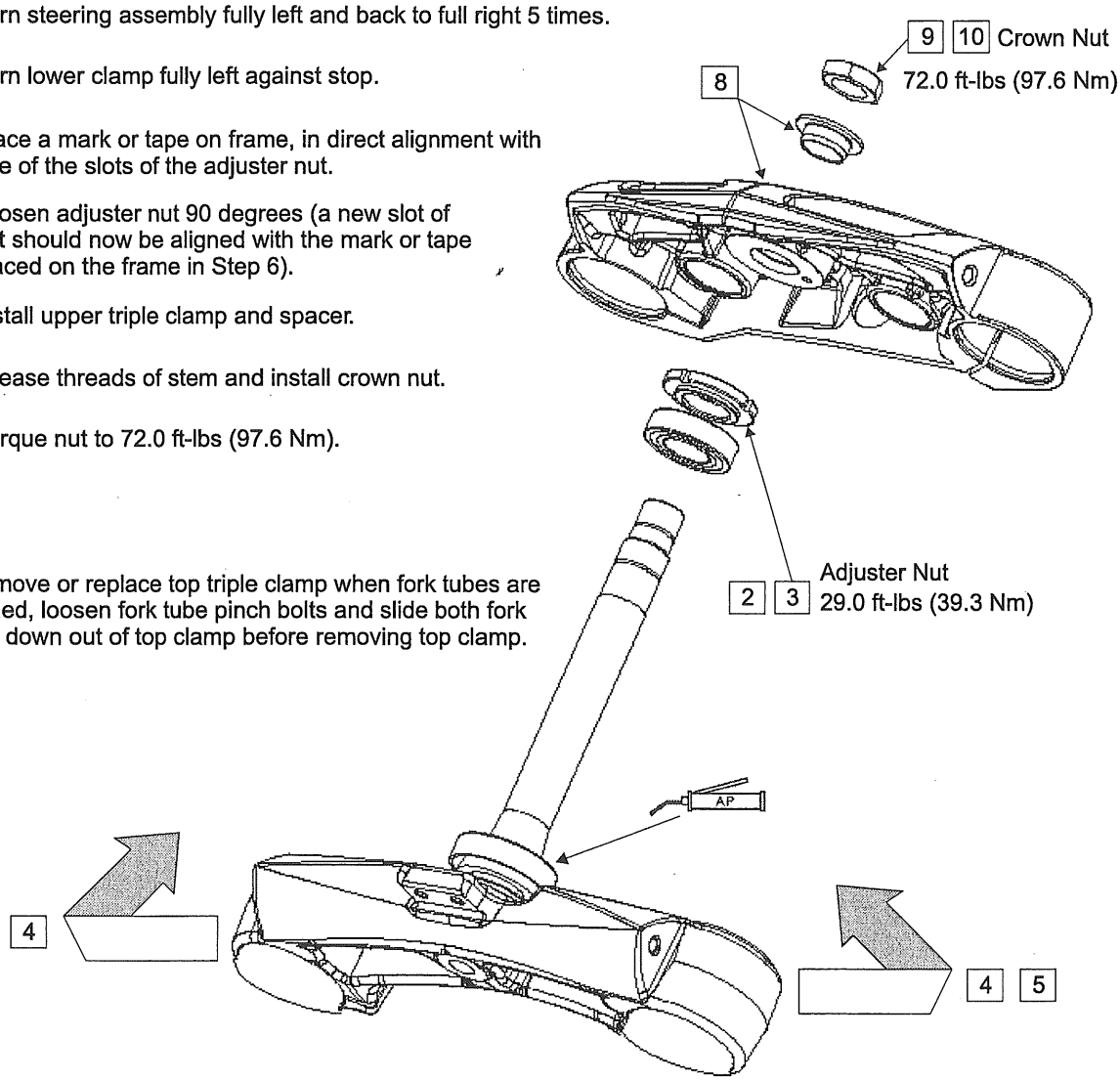

* To remove or replace top triple clamp when fork tubes are installed, loosen fork tube pinch bolts and slide both fork tubes down out of top clamp before removing top clamp.

12

CAST FRONT WHEEL ASSEMBLY VIEW — CROSS COUNTRY / MAGNUM

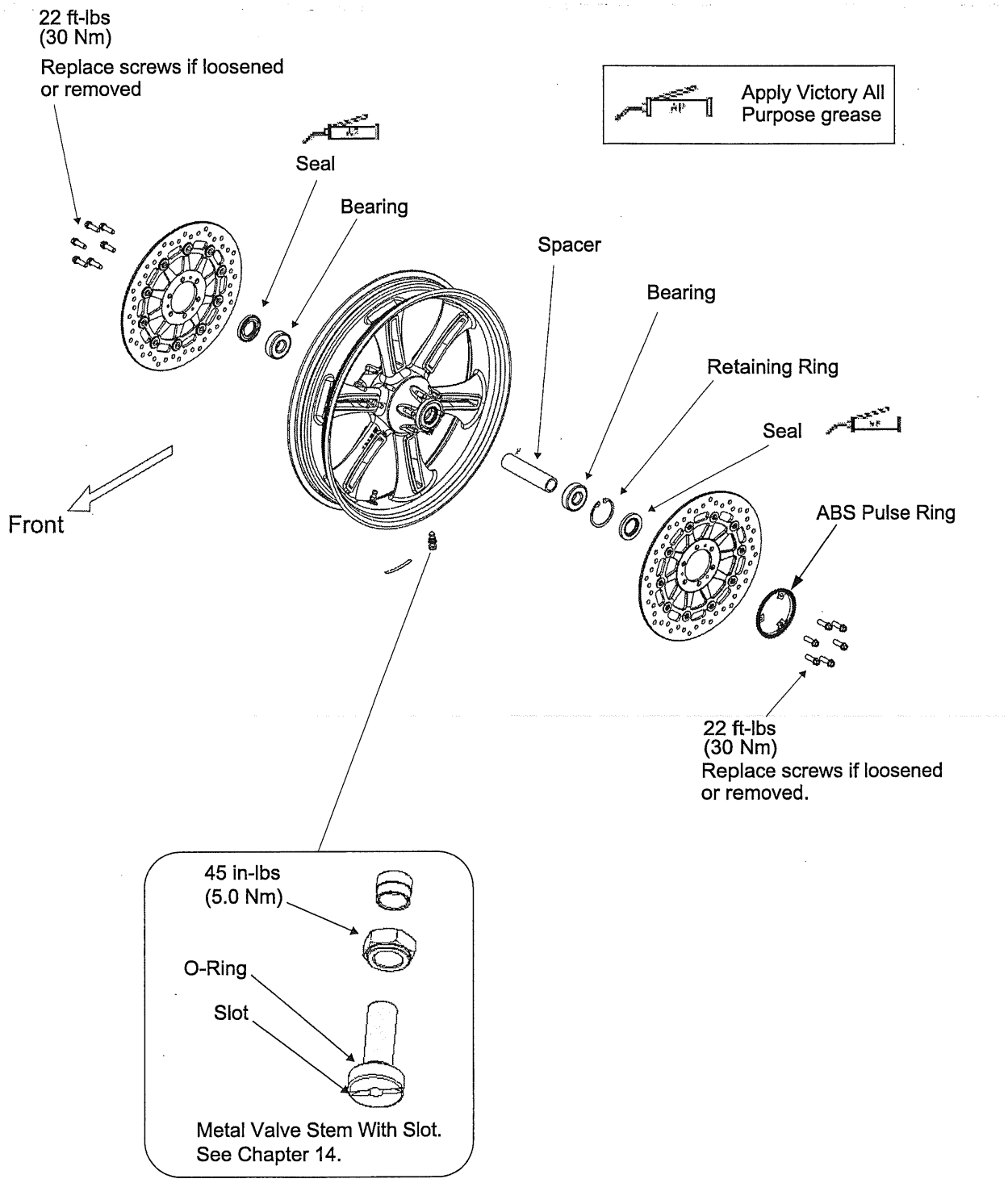

BILLET FRONT WHEEL ASSEMBLY VIEW - MAGNUM / X-1

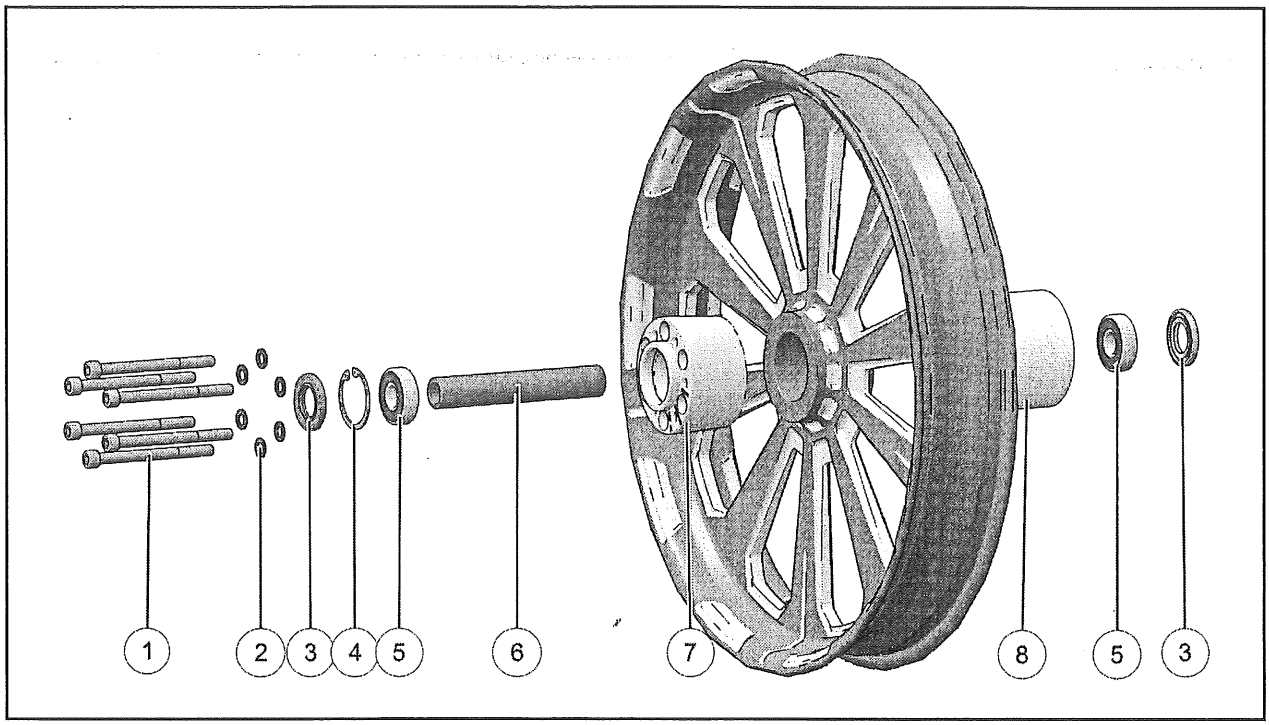

NUMBER	DESCRIPTION	TORQUE (IF APPLICABLE)
1	Bolt - 7/16-14 x 4" (QTY.6)	65 ft-lbs (88.0 Nm)
2	Washer (QTY.6)	–
3	Seal - 30 x 52 x 7 (QTY.2)	–
4	Retaining Ring - 52 x 2 (QTY.1)	–
5	Bearing - 20 x 52 x 15 (QTY.2)	–
6	Spacer (QTY.1)	–
7	Hub, Dual ABS	–
8	Hub, Dual ABS	–

SPOKED FRONT WHEEL ASSEMBLY VIEW

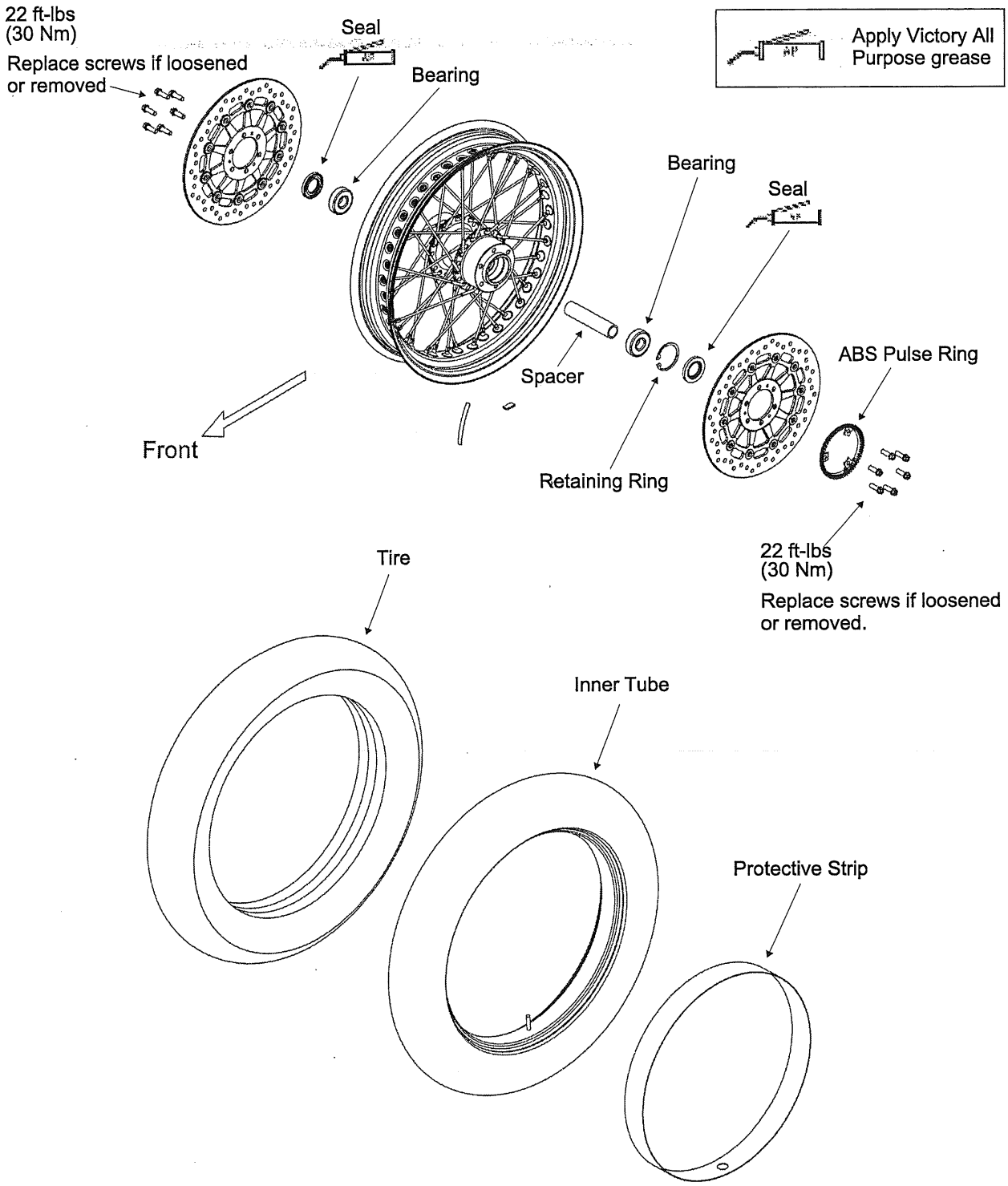

SERVICE PROCEDURES

HANDLEBAR REMOVAL (ALL MODELS)

⚠ WARNING

Control cables must be routed, installed, and adjusted correctly to function properly. Note the way each cable is routed and secured before removing the cable. If cables are incorrectly routed, installed, or adjusted, serious injury or death may occur. Permanent cable damage may result if the internal cables are bent or twisted during installation.

CAUTION

Left handlebar grip and grip end may be damaged during removal. Plan on replacing left grip and grip end if grip must be removed. Cover painted or chrome parts to prevent damage. Use care to protect fuel tank and front fender. Tank removal is recommended (Fuel Tank Removal, page 5.19). Secure, set aside, or support parts as they are removed.

1. *Cross Country / Magnum Models*: Remove fairing and then remove fairing support / dash as an assembly to access handlebar clamps and risers. See Fairing Mount Removal, page 3.19.
2. Cut tie straps (A) and (B) on both sides of handlebars to release wiring and cables. Note location of any additional straps (C) if accessories are installed.

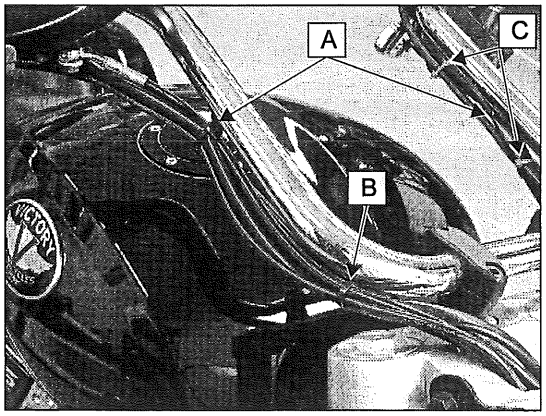

3. Loosen lock nut (D) and turn adjuster (E) toward switch housing to obtain maximum throttle cable free play.

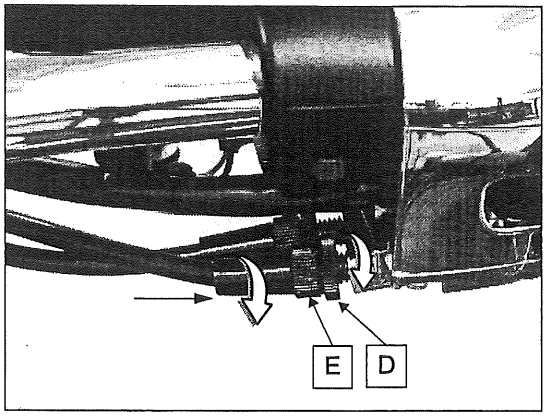

Also refer to assembly views onHandlebar Controls: Cross Country Assembly View, page 12.6 — Clutch Cable / Lever Perch Assembly View: Cross Country / Magnum, page 12.8 as required for the following steps.

4. Cover fuel tank to protect it from damage. Secure all cables, switches and controls out of the way as they are removed.
5. Disconnect front brake switch wires.
6. Remove front master cylinder clamp.

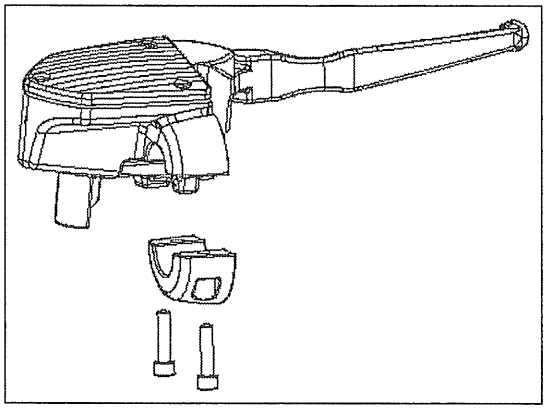

12

7. Secure master cylinder away from handlebars with reservoir level.

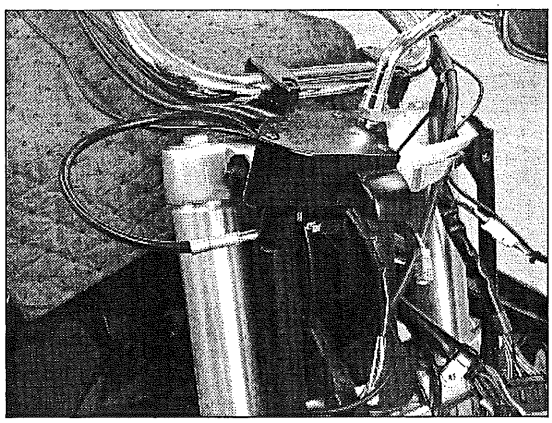

⚠ CAUTION

Keep brake reservoir in an upright position to prevent air from entering the system. Bleeding is required if air enters the system.

8. Remove cruise control switch screws (F) from bracket (if equipped). Remove bracket screws (G) and slide bracket away from switch body.

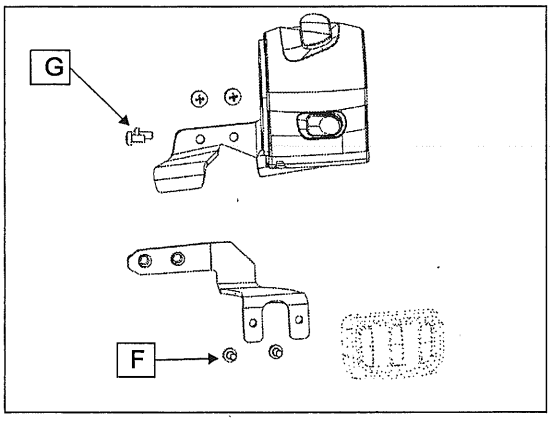

9. Remove (2) screws (H) from bottom switch plate. Tip the cable end of the plate downward to release tab (I) at the grip end and remove the plate. Remove longest screw (J) from front corner of switch and separate the switch halves.

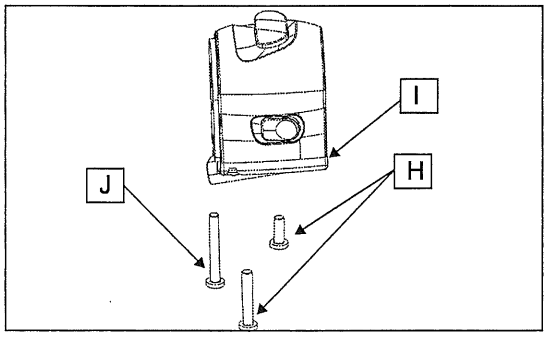

10. Slide throttle grip inward and tap right handlebar end with a soft faced hammer to remove.

11.

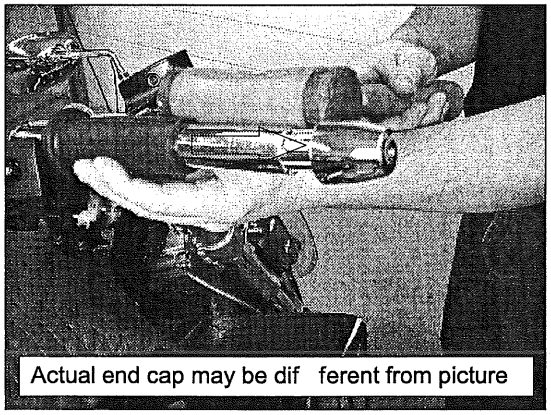

NOTE

If end cap is being replaced, grasp it with an adjustable pliers and remove with a twisting motion

12. Remove cables from throttle grip. Do not kink or bend the cables. Do not attempt to slide the grip off the end of the handlebar with cables attached.

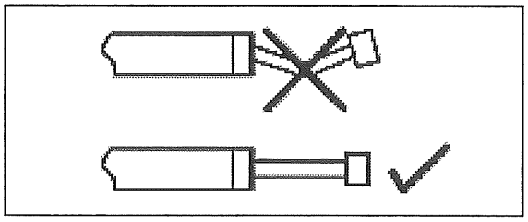

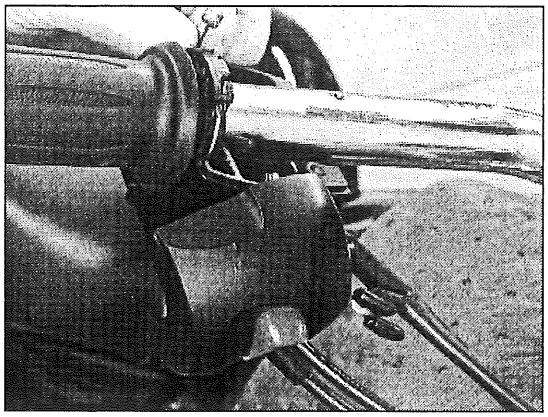

13. Grasp left handlebar end cap by with an adjustable pliers and twist to remove.
14. Remove left hand grip.
15. Heated Grips: Fold back edge of grip and remove set-screws.
16. Non-heated grips: Insert a thin screw driver between grip and bar to release adhesive bond. A small amount of solvent can be used to help loosen the adhesive. DO NOT ALLOW SOLVENT TO CONTACT COSMETIC SURFACES!
17. If handlebars will be reinstalled, remove any residual adhesive from bar with solvent.
18. Disconnect clutch interlock switch wire connector and remove clutch lever perch.
19. Remove audio / com switches (if equipped) and bracket.
20. Remove left handlebar switch.

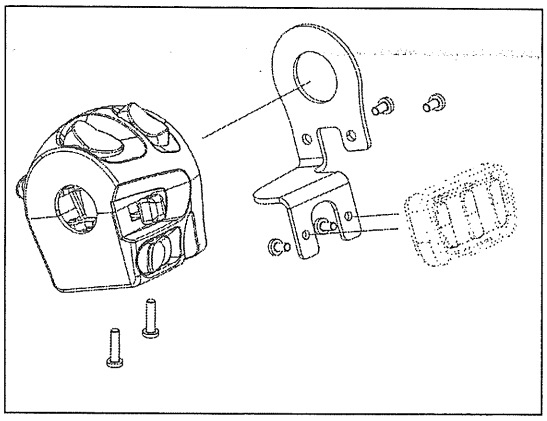

21. If handlebar risers will be removed, remove handlebars / risers as an assembly. If risers will not be removed, support the handlebars and loosen the rear handlebar clamp screws, and then the front. Remove handlebars.

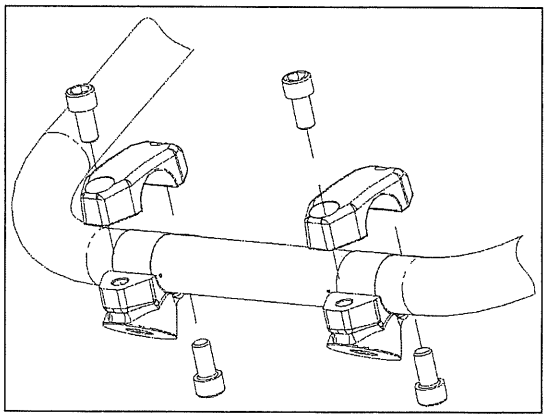

CLUTCH CABLE

Clutch Cable Removal

1. Protect clutch release arm (A) with a shop towel. Using an adjustable wrench, rotate release arm inward and disconnect cable from release arm.

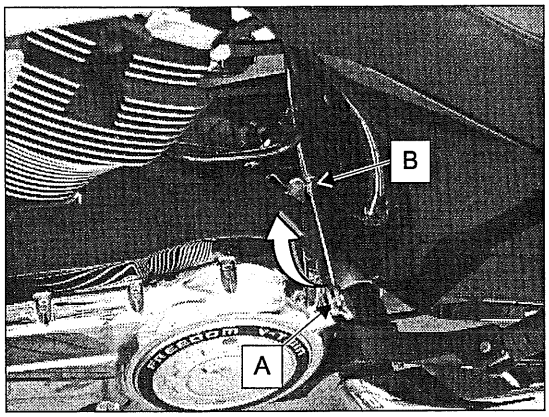

2. Remove nut (B) from lower end of cable and remove cable from bracket.
3. Remove side covers and seat (see Side Cover Removal, page 3.27).
4. Remove fuel tank (see Fuel Tank Removal, page 5.19).
5. Pull clutch cable casing (C) straight out until clear of lever perch and rotate cable outward to align inner cable wire with slot in lever. Do not bend or kink cable.

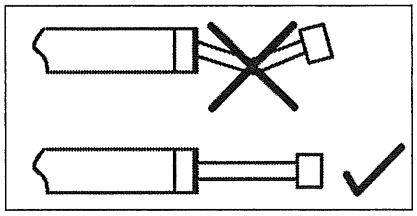

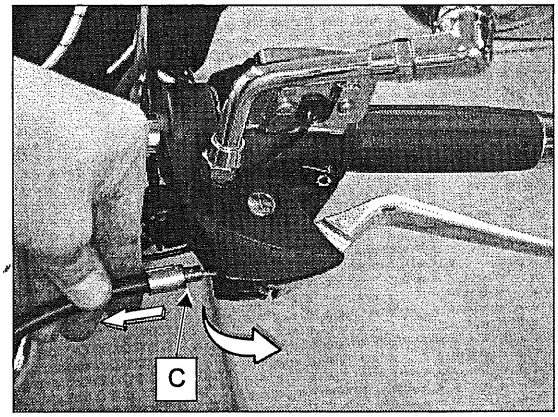

6. Cut tie strap on rear engine mount plate. Pull lower end of clutch cable out right side.

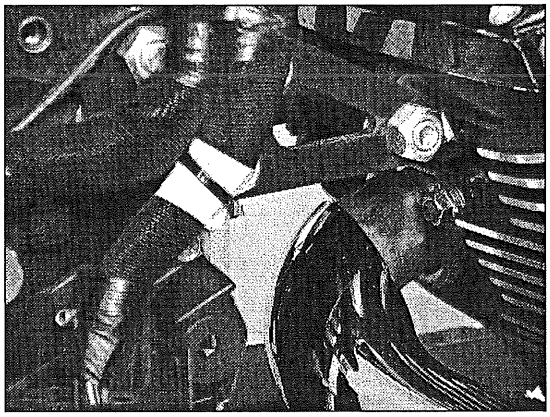

7. Note routing of clutch cable through frame and slide out through top triple clamp.

   Clutch Cable Installation

8. Route clutch cable as shown on Clutch Cable / Lever Perch Assembly View: Cross Country / Magnum, page 12.8 (through tie strap at front right side of steering head (with throttle cables) and up through left side opening in upper triple clamp).

9. Install cable in lower bracket and torque lock nut to specification.

TORQUE
Lock Nut: **48 in-lbs (5.4 Nm)**

10. Apply Moly Assembly Paste (PN 2871460) to both cable ends.
11. Connect lever end of cable to lever and perch. Do not kink or bend cable.

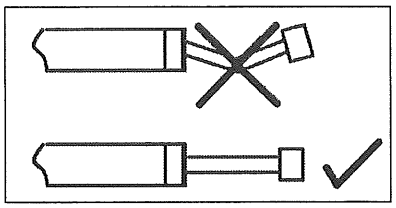

12. Rotate release arm inward (as in Removal Step 1) and connect lower end of cable to release arm.
13. Secure cable to lower wire harness (only) and to rear engine mount bracket with a tie strap as shown above and on Clutch Cable / Lever Perch Assembly View: Cross Country / Magnum, page 12.8.
14. Adjust clutch cable free play (Clutch Lever Free Play (Cable), page 2.16).

Clutch Cable Free Play
0.5 - 1.5mm (0.020-0.060")

THROTTLE CABLE

Throttle Cable Removal

1. Remove fuel tank (see Fuel Tank Removal, page 5.19).
2. Hold upper cable adjuster (A) and loosen knurled lock nut (B).
3. Turn the adjuster nut fully inward (toward switch block) to gain maximum cable free play.

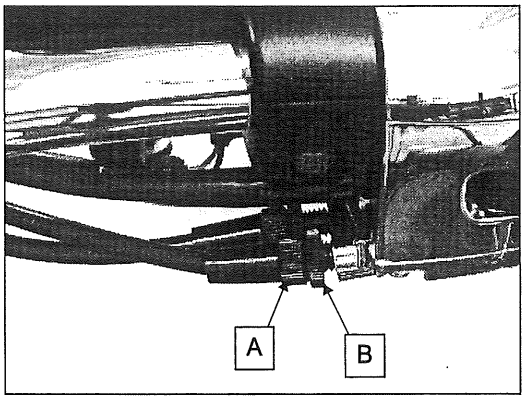

4. Cut upper and lower tie straps (C).

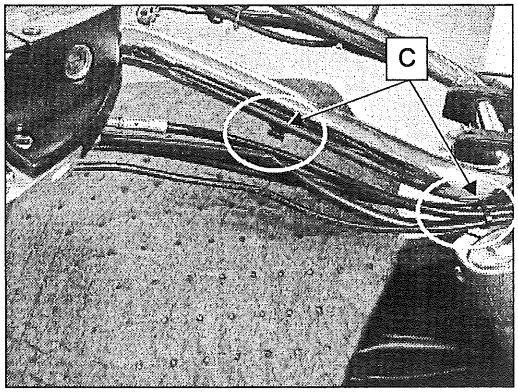

5. Loosen nuts (D) on each cable and remove cables from bracket.

12

6. Remove cable ends from throttle reel. Do not kink or bend the cables.

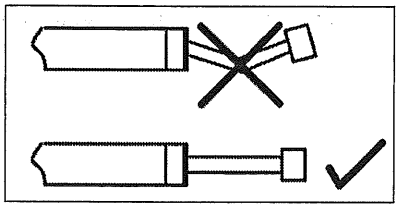

7. NOTE: The dark colored cable is mounted on the bottom of the bracket.

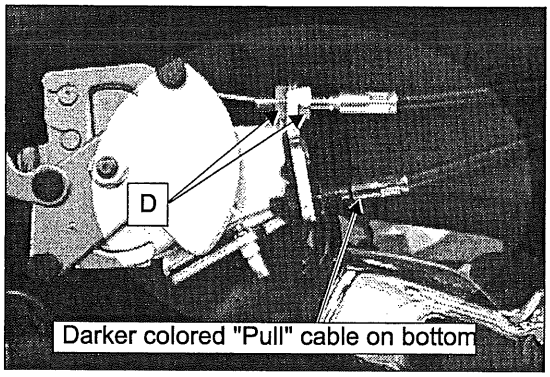

8. Remove (2) screws (F) from bottom switch plate. Tip the cable end of the plate downward to release tab (G) at the grip end and remove the plate. Remove longest screw (H) from front corner of switch and separate the switch halves.

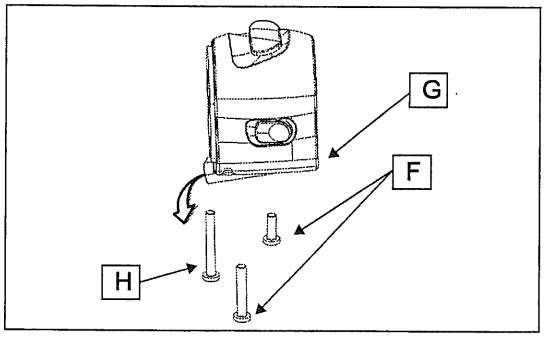

9. Remove cables from throttle grip. Do not kink or bend the cables.

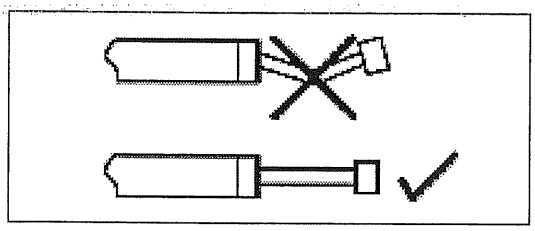

10. Remove cables from lower switch.
11. Take note of the cable routing before removing cables.

- Through opening in right side of upper triple clamp.
- Through tie strap on right side of steering head with clutch cable. This tie strap must not be pulled tight upon installation. Cables must be able to move freely in strap.

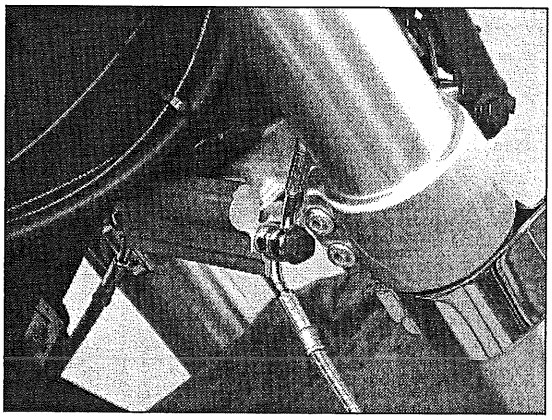

12. Remove cables.

Throttle Cable Installation

13. **CABLE IDENTIFICATION:** The throttle opening (pull) cable is darker in color at the throttle body end. It is the front-most cable in the switch cube and the lower-most cable in the throttle body bracket.

14. On vehicles equipped with cruise control, the throttle "push" cable can be identified by the cruise-cancel switch near the throttle body end.
15. Route the cables as noted in Step 10 of Removal procedure.

16. Arrange throttle opening (pull) cable toward the front of the right hand switch cube. Arrange the cables to route smoothly toward the throttle body without twisting around each other.

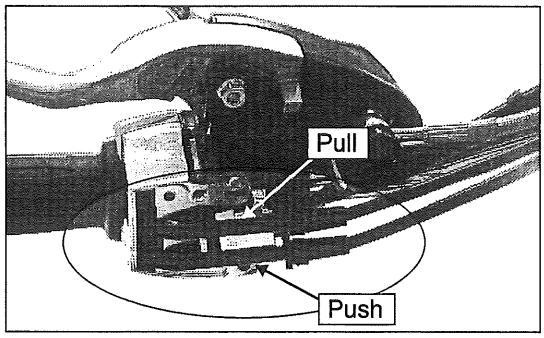

17. Feed the inner cables up through the switch cube. Cables should lie flat against the switch (switch shown removed for clarity).

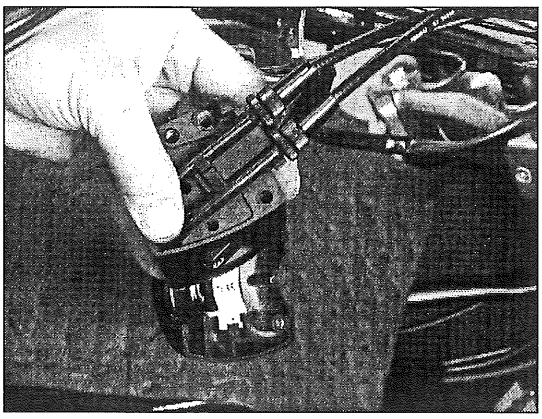

Handlebar Controls: Cross Country Assembly View, page 12.6

18. Apply a thin film of Victory Multi-purpose grease to the barrel ends of the cables and carefully attach them to the twist grip.
19. Apply a thin film of Dielectric grease to the switch mounting surface of the handlebar.
20. Install upper half of the switch cube and tighten the single screw to specification.

TORQUE
Switch Screw: **25 in-lb (3 Nm)**

21. Be sure the cables are seated properly in the switch cube and install the lower cable retaining plate using the two screws. Torque screws to specification.

TORQUE
Cable Retaining Plate: **25 in-lb (3 Nm)**

22. Apply a thin film of Victory Multi-purpose grease to the barrel ends of the lower cable and attach them to the throttle body reel.
23. Place each cable in the bracket with one nut on either side of the bracket. Set the adjustment range in the middle. Tighten the nuts against the bracket securely.

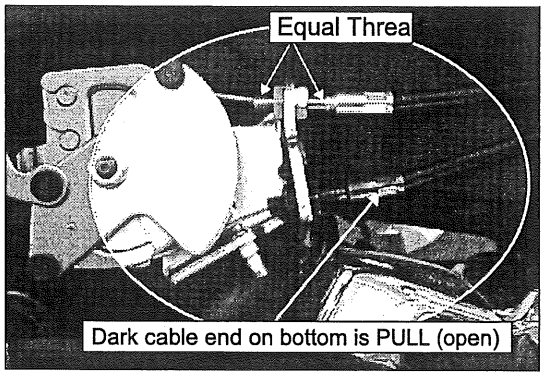

24. Adjust throttle cable free play to 3-6 mm (1/8-1/4 inch).

Throttle Cable Free Play
3 - 6 mm (1/8 - 1/4")

25. Check throttle operation.
- Be sure the throttle opens and closes smoothly in all steering positions, and returns to the fully closed position when throttle grip is released.
- If throttle grip does not return properly, re-check cable free play, inspect cables for proper routing, and be sure cables are attached properly to the throttle reel.
- Inspect condition of cables for kinks, damage, or frayed ends.
- Be sure switch cube and grip are located properly on handlebar, and that screws are properly torqued.
- Be sure all cable fasteners are tight.

26. Start engine with transmission in neutral.
27. Turn handlebars full right to full left. Idle speed should not change in any steering position. If idle speed changes, re-check throttle grip free play, inspect cables for proper routing, and be sure cables are attached properly. Replace cable(s) if damaged.

FRONT WHEEL REMOVAL

1. Also refer to illustration on Cast Front Wheel Assembly View — Cross Country / Magnum, page 12.16 .
2. Remove right or left front brake caliper screws (A) and caliper.

CAUTION

Do not twist the brake hose or brake line. Do not allow caliper to hang from the brake hose. Secure caliper in such a way to avoid hose damage.

NOTE

Do not operate the front brake lever with the caliper or wheel removed.

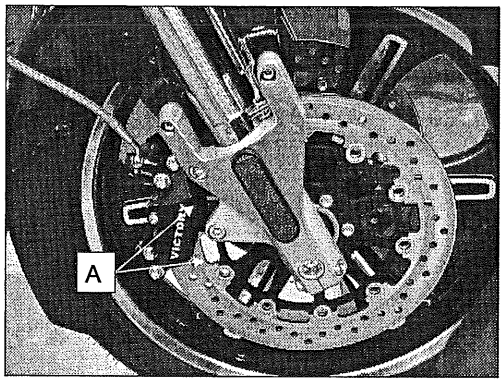

3. Loosen axle pinch bolts on lower right fork leg (B).

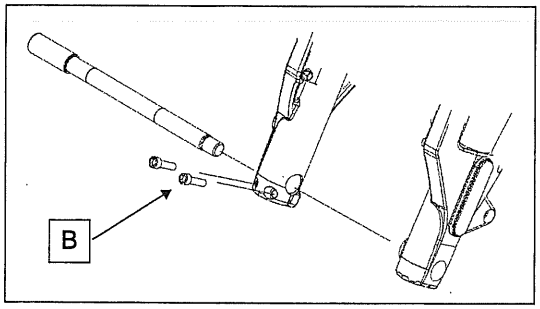

4. Securely support front end of motorcycle so front wheel is off the ground.

CAUTION

Take precautions so that the motorcycle is securely supported when the tire is off the ground.

5. Support wheel and remove axle. Be prepared to catch spacers on each side of the wheel and remove wheel.

FRONT AXLE INSPECTION

1. Place axle in V-blocks and inspect runout. Compare to specifications on Specifications, page 12.4.

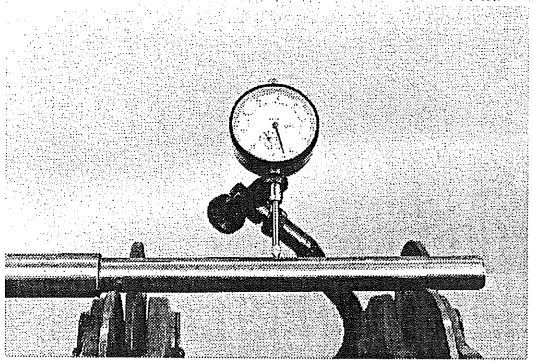

2. Replace axle if it fails inspection. Do not attempt to straighten a bent axle.

FRONT WHEEL INSPECTION

1. Install front wheel in truing stand.

NOTE

Bearings must be in good condition to accurately measure runout.

2. Set up a dial indicator to measure radial runout (up and down) (A) and compare to specifications on Specifications, page 12.4.
3. Position dial indicator to measure axial runout (side to side) (B) and compare to specifications on Specifications, page 12.4.

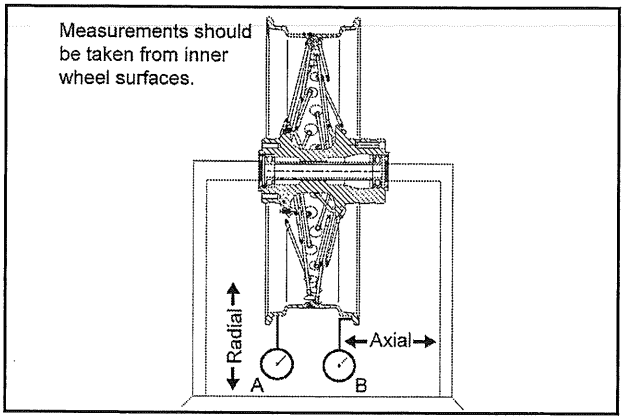

4. Visually inspect wheel for cracks.
5. Replace wheel if it fails visual or measured inspection. Do not attempt to straighten cast or billet wheels.

BRAKE DISC REMOVAL

NOTE

Left side brake disc is installed together with ABS tone ring. ABS tone ring is secured using 3 of 6 brake disc bolts.
Refer to Brake Disc Inspection (Front & Rear), page 15.29 for disc inspection.

1. Remove front wheel (Front Wheel Removal, page 12.26).
2. Position wheel with brake disc facing up (protect the other disc and wheel when removing opposite disc.
3. If removing the left side brake disc, remove 3 screws securing ABS tone ring and discard.
4. Remove and discard remaining brake disc screws.
5. Remove brake disc from wheel.

BRAKE DISC INSTALLATION

1. Clean screw hole threads with Loctite Primer N.
2. Clean surface of wheel and brake disc with Victory® Brake Cleaner.
3. Install disc on wheel with part number facing OUT.
4. If installing left side brake disc, move ABS tone ring into position for installation.
5. Replace screws with new screws which have pre-applied locking agent.
6. Evenly torque brake disc retaining bolts to specification.

TORQUE

Brake Disc Mounting Bolts:
22 ft-lbs (30 Nm)

⚠ WARNING

Do not re-install brake disc screws. Use only *new* screws which have a pre-applied locking agent.

*All surfaces and fasteners must be clean dry and free of oil before assembly.

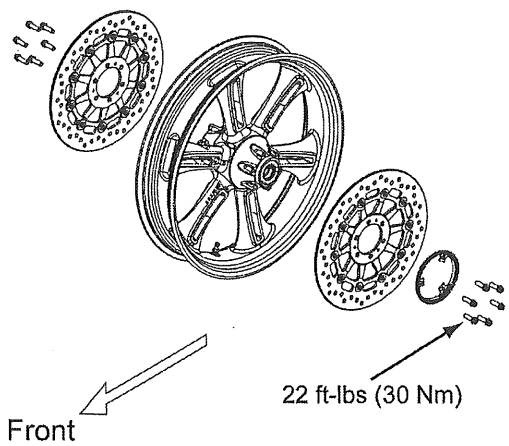

FRONT WHEEL BEARING INSPECTION

NOTE

Inspect bearings installed in the wheel. Do not remove to inspect. Bearings cannot be repacked. Replace both wheel bearings if one or both fail inspection, or if either bearing was removed. For inspection with the wheel installed on the vehicle, refer to Front Wheel Inspection, page 12.26 .

1. Visually inspect bearing seals on each side for wear or damage.

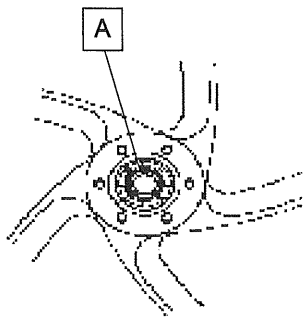

12

2. Check bearings by turning inner race (A) by hand.

- Look for signs of discoloration, scoring, galling, or contamination from moisture or dirt. Replace bearings if any of the above are present.
- Turn the inner race of the bearings. The bearings should turn smoothly and quietly. The inner race should be firm with minimal side to side movement and no detectable up and down movement.

3. Discard bearings that fail any of the above inspections.

CAUTION

Do not reuse bearings after removing them from the wheel. Removal damages the bearings internally.

4. Inspect bearing fit into wheel hub. The outer race of the bearing must fit tightly into the bore. You should not be able to move it (or remove it) by hand. Replace the wheel if outer race of a new bearing does not fit tightly in the bore.

FRONT WHEEL BEARING REMOVAL (TYPICAL)

NOTE

Replace both wheel bearings as a set. Do not replace only one wheel bearing.

1. Place a shop towel over the edge of seal bore.

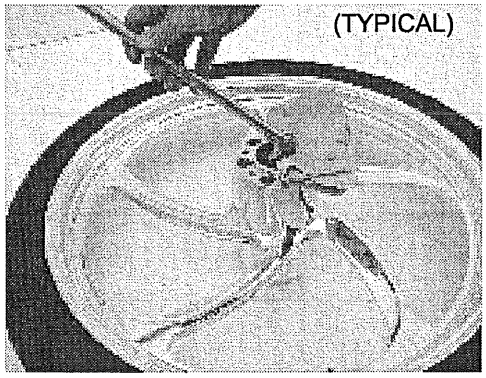

2. Carefully remove both seals using a pry-bar and discard. Be careful not to scratch the seal bore.
3. Remove retaining ring from left side.
4. Install bearing remover element into left side bearing and remove it.
5. Remove bearing spacer from wheel hub, measure the length and compare to specification. Replace spacer if it is worn beyond the service limit or if the bearing contact surface is damaged.

MEASUREMENT
Minimum Spacer Length: **121.80 mm (4.795") ALL**

6. Drive out right side bearing using a suitable drift or extract the bearing with a bearing puller.

FRONT WHEEL BEARING INSTALLATION

NOTE

Refer to illustration below for Steps 3-9.

1. Clean inside of wheel hub and bearing spacer. Replace spacer if any wear is evident on the ends.
2. Place new bearing into left hand side of wheel with markings facing up (toward outside of hub).
3. Assemble bearing collar with flat side of 50-51 mm collar against bearing. Collar must be slightly smaller than O. D. of bearing and must be flat to support inner and outer race equally. DO NOT pull or press on inner race of ball bearings or bearing will be permanently damaged! Assemble right side of tool as shown and pull bearing into hub until *fully seated.*

Bearing installation tool set: PV-43515
NOTE: Use of this special tool is shown with rear wheel bearing installation in Chapter 13.

4. Install bearing spacer.
5. Place new right wheel bearing onto wheel with markings facing out.
6. Install flat side of another 50-51 mm bearing collar against right bearing so both races are supported.
7. Pull bearing in to right side of wheel until seated against spacer.
8. Remove tool. Check that spacer is centered with bearings. **If not, center it by inserting front axle. Repeat Step 7 to fully seat bearing on spacer.**
9. Bearings must rotate smoothly after installation.

10. Install retaining ring. Be sure it is fully seated in the groove.

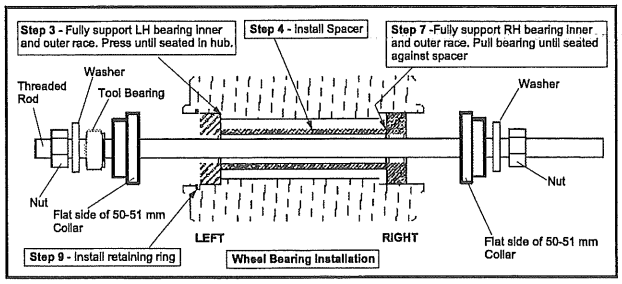

11. Install new seals using a 52 mm seal driver. (Fig. 1)

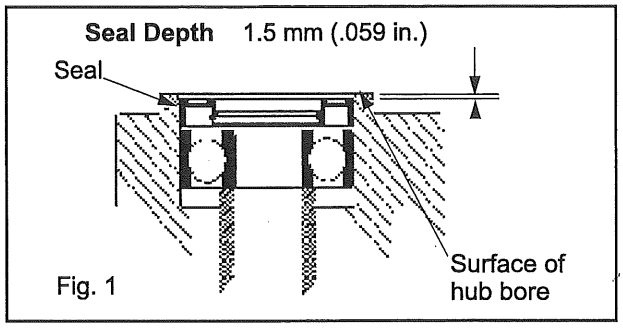

Fig. 1

12. Rotate inner races of bearings to check for free, smooth rotation.
13. Install discs (Brake Disc Installation, page 12.27). Wipe discs clean with Victory Disc Brake Cleaner.

CAUTION

Do not allow brake cleaner to contact painted surfaces.

⚠ WARNING

Grease or oil on the brake disc will increase stopping distance which may lead to loss of vehicle control or an accident.

FRONT FORK REMOVAL

1. Cover front fender to protect it from damage.
2. Remove the fairing and fairing support with console as an assembly (see Fairing Mount Removal, page 3.19).

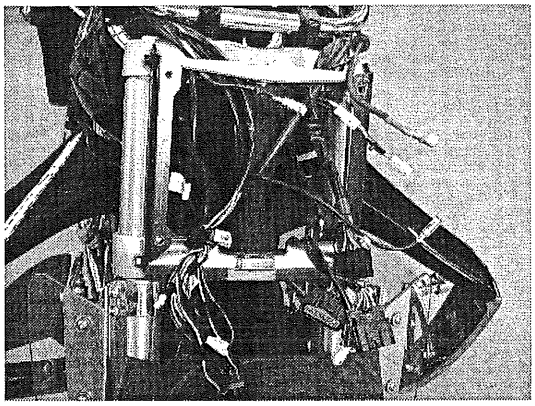

3. Remove bolt (A) securing wheel speed sensor to mounting bracket and withdraw sensor.

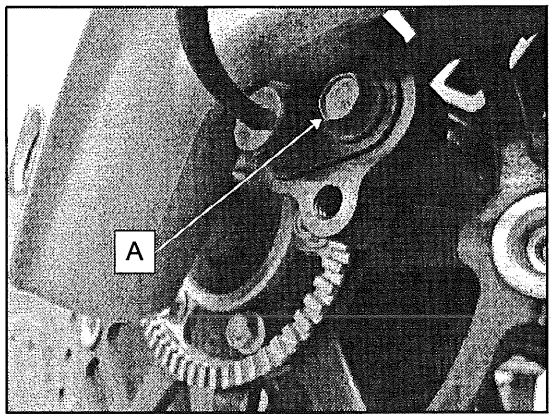

NOTE

Be sure to collect wheel speed sensor adjustment shims from behind sensor if present.

4. Remove bolts (B) and both front calipers.
5. Secure caliper and brake lines out of the way and support securely.

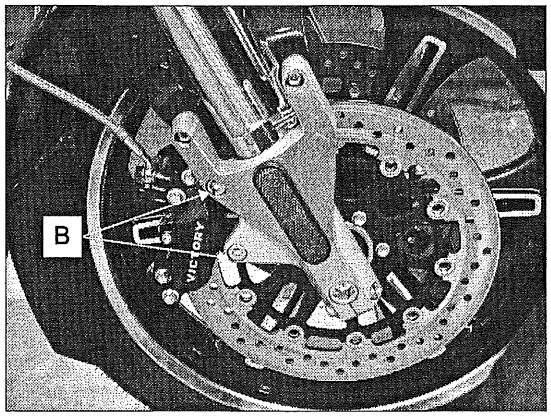

CAUTION

Do not twist the brake hose or brake line. Do not allow caliper to hang from the brake hose. Secure caliper in such a way to avoid hose damage.

6. Remove front wheel (Front Wheel Removal, page 12.26).
7. Remove front fender.
8. If triple clamp will be removed, remove front brake line manifold bolts (C) from lower triple clamp.

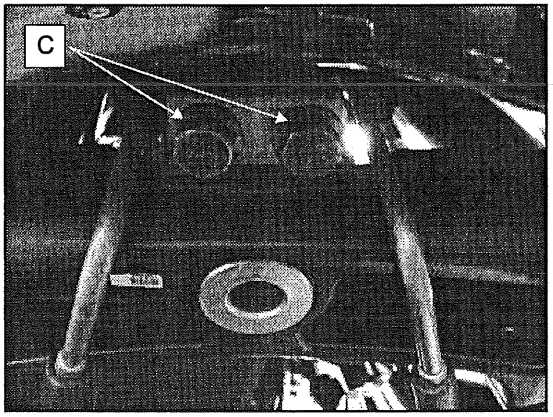

9. Loosen upper triple clamp pinch bolt(s) (D) for both left and right fork tubes.

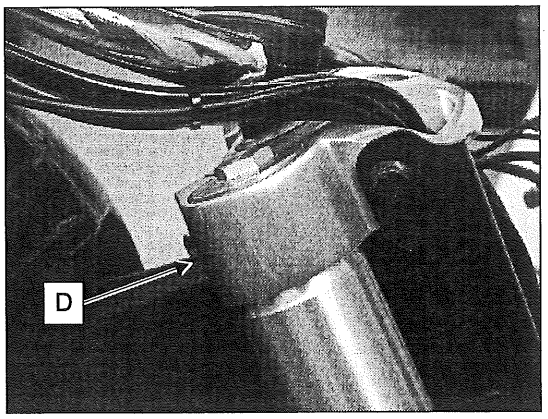

10. Loosen lower triple clamp pinch bolts (D) evenly, 1/4 turn at a time until loose.

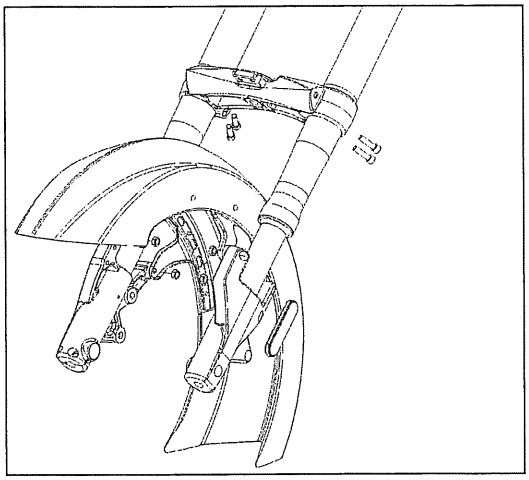

11. Slide fork legs down and out of triple clamps.

FRONT FORK TUBE INSTALLATION

Fork Tube Installation Steps: Cross Country / Magnum, page 12.14

FRONT FORK DISASSEMBLY

⚠ WARNING

Springs are compressed during this procedure. Wear a face shield to reduce the chance of injury.

NOTE

Also refer to Front Fork Assembly View on Fork Assembly - Cross Country / Roads, page 12.10.

1. Clean fork tubes thoroughly before disassembly.
2. Secure fork spring compressor (PV-49463) vertically in a vise with drive bolt (A) UP and support peg (B) at the bottom.

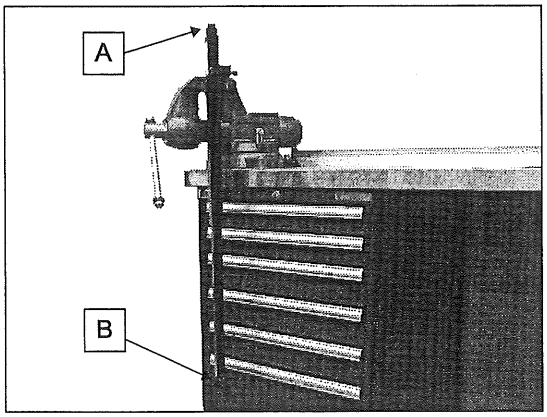

3. Place fork leg onto spring compressor tool. Install fork spring compressor adaptor tool (PV-49464) onto fork cap (C). Loosen fork cap by unscrewing outer fork tube. Slide outer tube down to expose spacer. Keep fork upright.

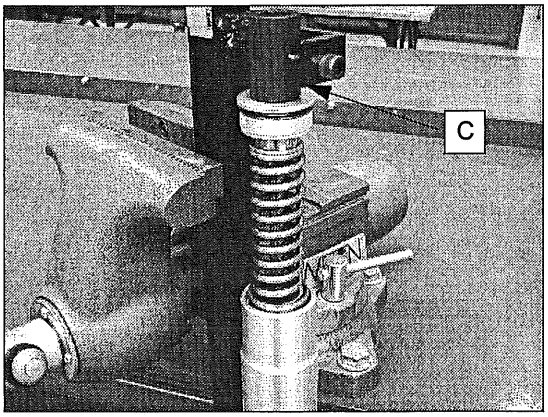

FORK SPRING REMOVAL

4. Remove fork spring compressor adaptor tool and reposition fork spring compressor per steps 5 & 6.
5. Turn drive bolt to adjust tool to proper length, so gaps in upper spring coils are approximately aligned with pegs.
6. Turn thumb screws (D) inward until retaining slot on end of screw aligns with spring. Push spring onto stationary peg, then onto adjustable pegs until spring coils are captive.

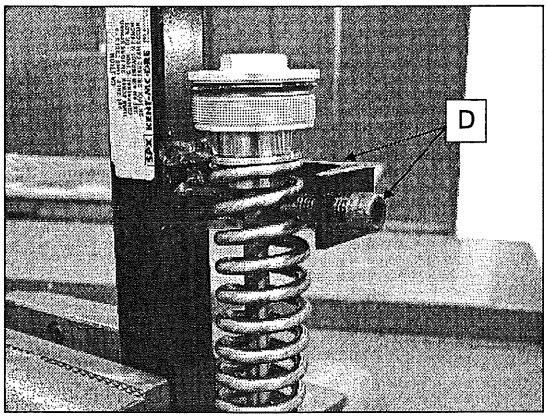

⚠ WARNING

Wear eye / face protection. Fork components are under spring pressure. Use hand tools only on spring compressor tool to apply and release spring pressure.

7. Turn drive bolt (E) of tool to compress spring just enough to hold fork in position and expose jam nut.
8. Hold jam nut with open end wrench and remove cap.

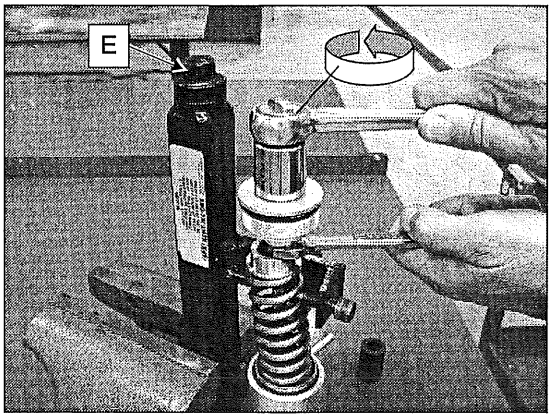

9. Remove nut from cartridge shaft. NOTE: Nut can be removed later if it is not free on the shaft.

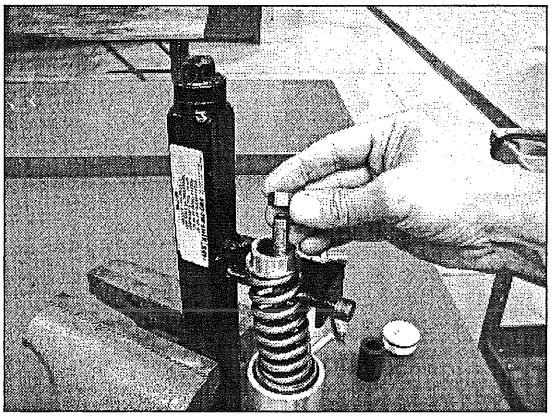

10. Slowly release all spring pressure and remove spacer.

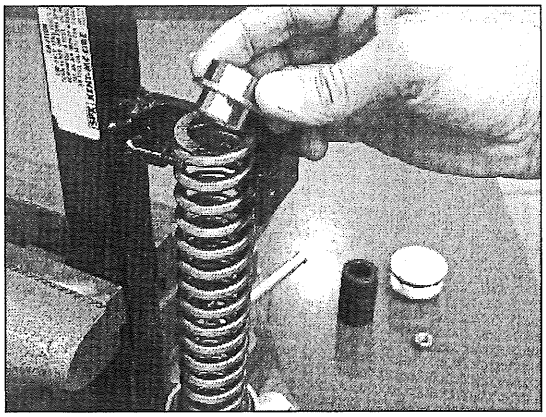

11. Remove upper spring.

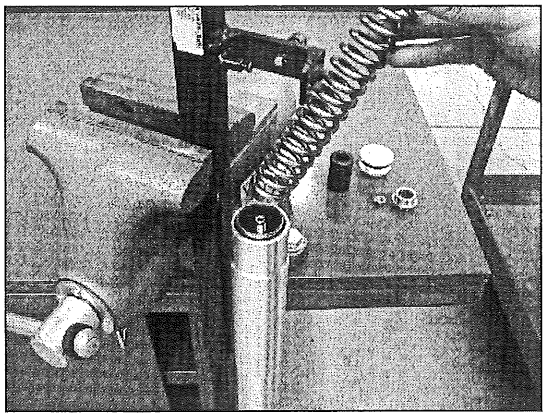

12. Remove fork leg from tool, lifting both inner and outer tubes together.

NOTE
DO NOT lift by outer tube only. Oil will spill if outer tube slides too far up inner tube.

13. Pour fork oil out of tube and remove lower spring with lower spacer. Move cartridge shaft through complete stroke several times to drain cartridge until damping is gone.

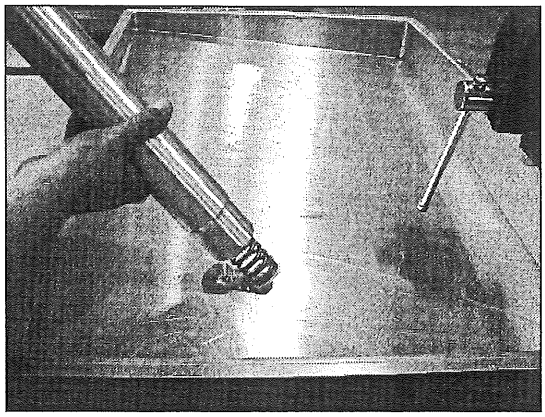

14. Lower spring has small diameter wire and the coils are closely spaced. The upper spring has heavier wire and the coils spacing is wider.

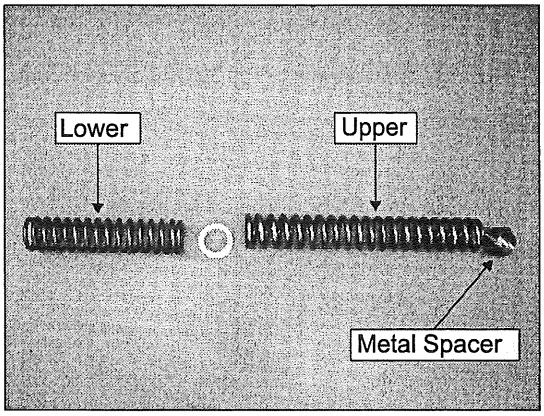

15. Proceed to Fork Seal Removal / Tube Disassembly.

16. *To change fork oil only, proceed to Fork Oil Filling / Level Setting (*Fork Oil Filling / Level Setting, page 12.39*).*

FORK SEAL REMOVAL / TUBE DISASSEMBLY

NOTE

Replace dust seal and fork seal upon assembly.

SEAL REMOVAL:

1. Separate tubes. Remove dust seal (by hand) or protect the tube and carefully pry to remove.

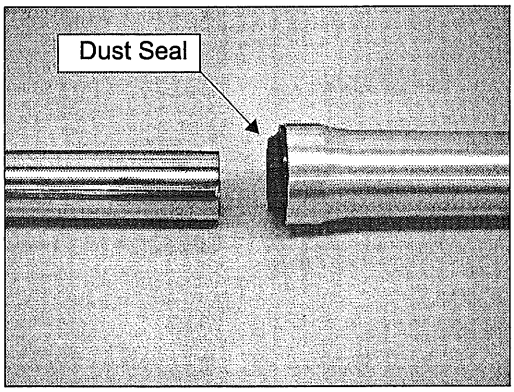

2. Remove seal retaining ring. Do not scratch tube.

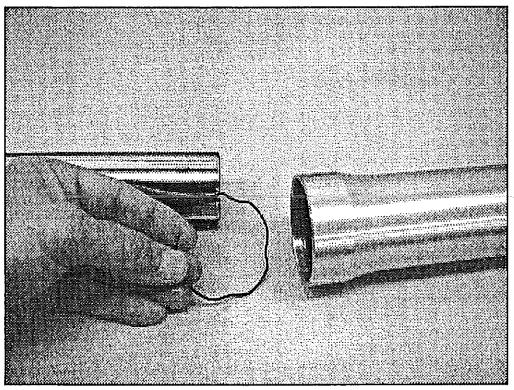

3. Protect surface of outer tube. Carefully pry seal from outer tube. Do not scratch seal bore. Remove seal backing washer from outer tube.

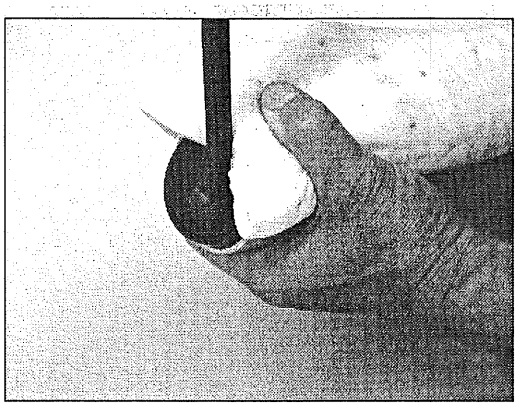

4. Inspect bearing surface of bushings. Replace bushing if bronze material appears on more than 1/4 (25%) of the entire anti-friction surface coating.

NOTE

Use a light to visually inspect bushing inside the outer fork tube. Replace tube assembly if upper bushing is worn.

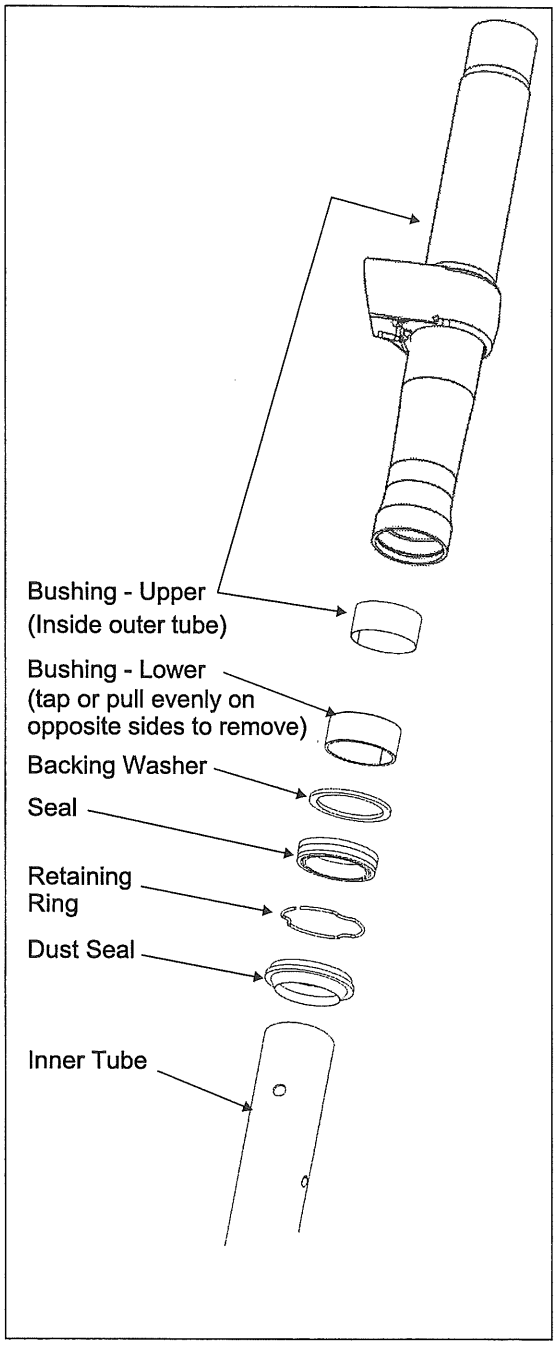

CARTRIDGE REMOVAL

⚠ WARNING

DO NOT disassemble the cartridge. If damaged or worn, it must be replaced as an assembly.

5. Cartridge removal is not required for fork oil change or for seal replacement. To clean cartridge, add clean fork oil to inner tube and pump damper rod to flush cartridge. Discard oil.

   If cartridge removal is required proceed as follows:

6. Hold cartridge with holder PV-49452 using castellated end of tool (octagonal end out).

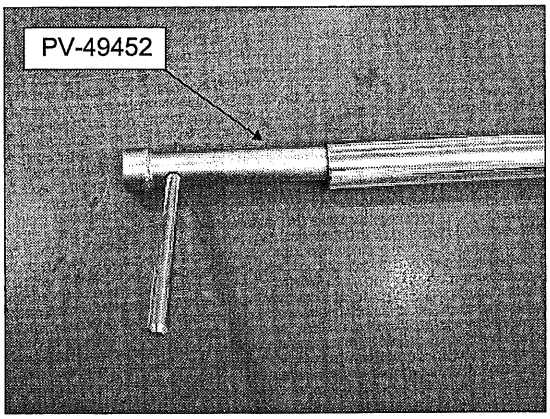

7. Remove cartridge screw and sealing washer using an extended 8 mm hex socket.

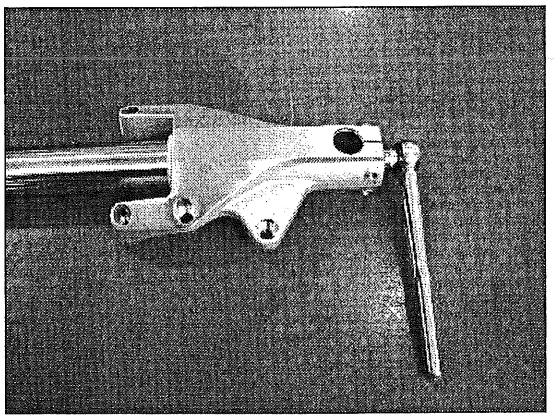

8. Remove cartridge from inner tube.

FRONT FORK INSPECTION

1. Measure free length (A) of both upper and lower fork spring and compare to specifications on Specifications, page 12.4.

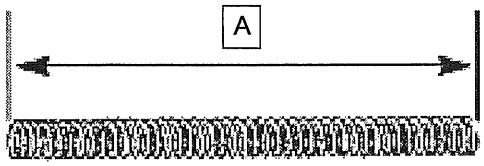

2. Inspect inner fork tube for scoring, heavy scratches, dents due to rocks or other road debris, or excessive wear. Replace tube if worn or damaged.
3. Place fork tube in V-blocks or truing stand and measure runout. Replace tube if runout exceeds service limit listed on Specifications, page 12.4.

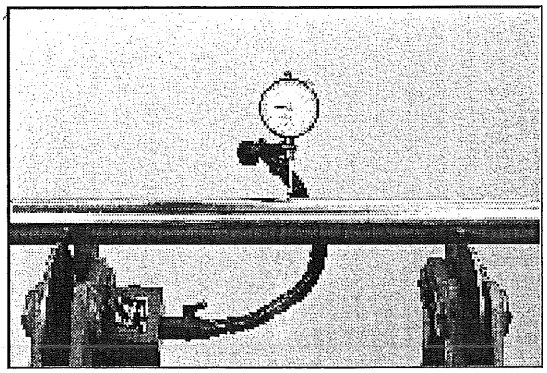

⚠ WARNING

Do not attempt to straighten bent fork tubes. Doing so will weaken the structural integrity of the forks and make the motorcycle unsafe to operate.

4. **DO NOT loosen or remove set screw (B).**

⚠ WARNING

DO NOT disassemble the inner fork tube. If damaged or worn, the inner fork tube / lower casting must be replaced as an assembly.

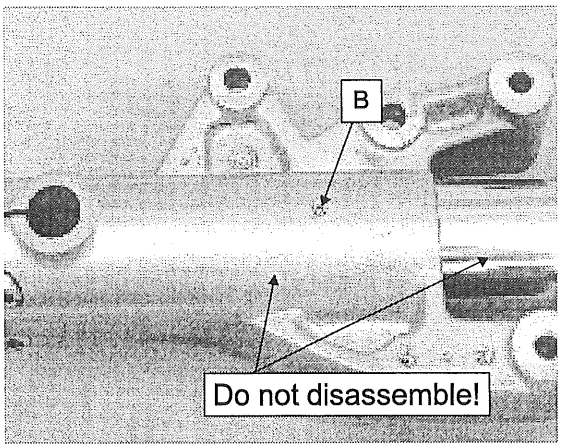

5. Inspect outer tube for dents or other damage. Look for cracks in the tube, especially in the clamping zone. Assemble inner and outer fork tube and move inner tube through complete travel range. Check for resistance or binding in suspect area of outer tube. Replace outer tube if binding or resistance is evident, or if tube is cracked.
6. Inspect cartridge by moving shaft through travel range. If binding is evident, replace the assembly.

FRONT FORK TUBE ASSEMBLY

Also refer to fork assembly view (Fork Assembly - Cross Country / Roads, page 12.10).

1. Be sure screw threads in bottom of cartridge are clean and not damaged.
2. Place cartridge assembly into inner fork tube. Hold cartridge with PV-49452.

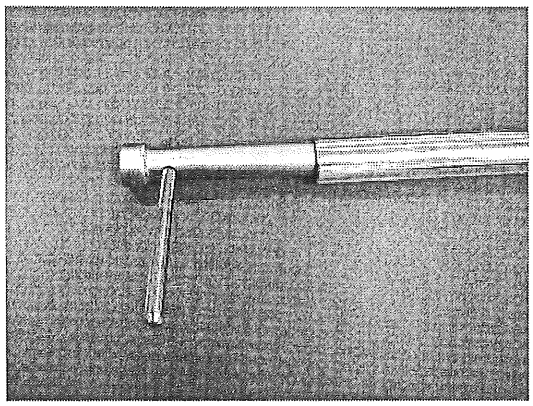

3. Install a new cartridge screw (A) and new sealing washer (B). Torque screw to specification.

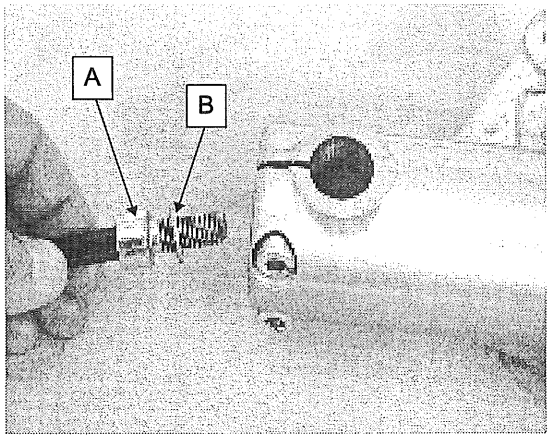

TORQUE
Cartridge Screw: **19 ft-lb (26 Nm)**

4. To prevent seal damage, install seal guide (C) over end of fork tube as shown lubricate surface of guide.
5. Carefully install a new dust seal (D) (external spring faces down) and slide it over seal guide.
6. Set new retaining ring (E) on dust seal.

7. Lubricate and install a new fork seal (F) with marks facing dust seal and retaining ring.

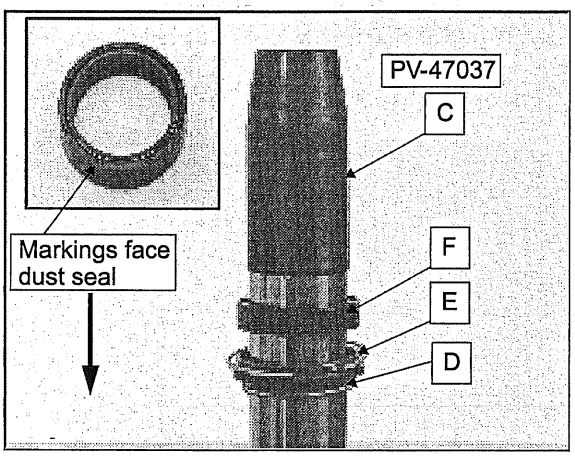

8. Remove seal guide from inner tube and install seal backing washer (G) against seal. Machined face (flattest edge) should face UP (away from seal).

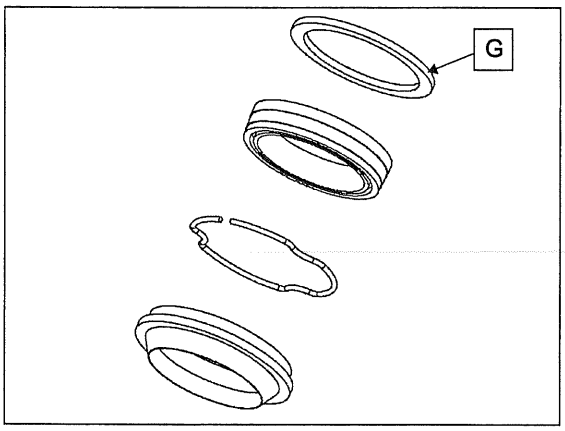

NOTE

If lower tube bushing was removed from the outer tube for replacement, slide the new bushing onto the inner tube after backing washer is installed.

9. Lubricate lower bushing with fork oil. Assemble the outer tube to the inner tube.

   If lower bushing was not removed go to Step 10.

10. Start the lower bushing into the outer fork tube and slide the backing washer against it. Use the seal driver to tap the bushing into the outer tube until fully seated.

11. Lubricate outer surface of seal with fork oil.

12. Drive seal into outer tube with large side of seal driver until fully seated (below retaining ring groove).

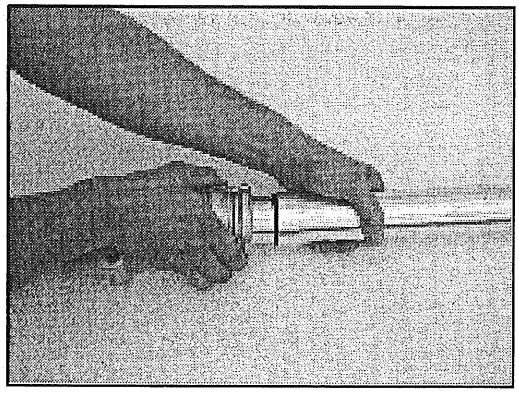

13. Install retaining ring (H) into groove of fork tube. Be sure entire retaining ring is seated in groove.

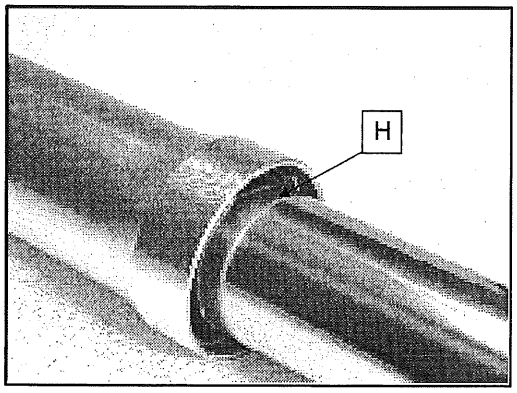

14. Wipe any excess oil from seal cavity and press dust seal in (by hand) until fully seated in outer tube.

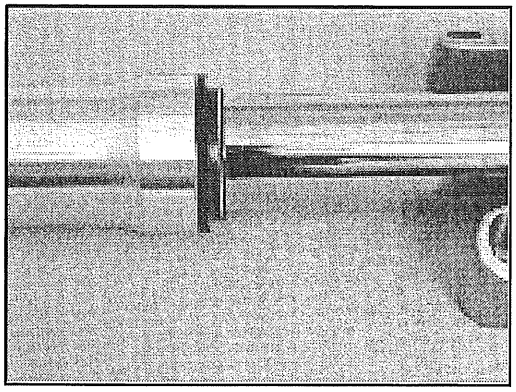

FORK OIL FILLING / LEVEL SETTING

1. Slide tubes together lightly to bottom of travel range.

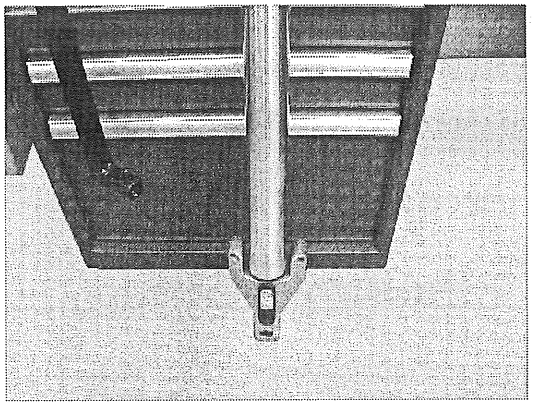

2. Tip fork leg at an angle to reduce bubbles when adding fork oil.
   ADD: About 500 cc of P/N 2877421 fork oil.

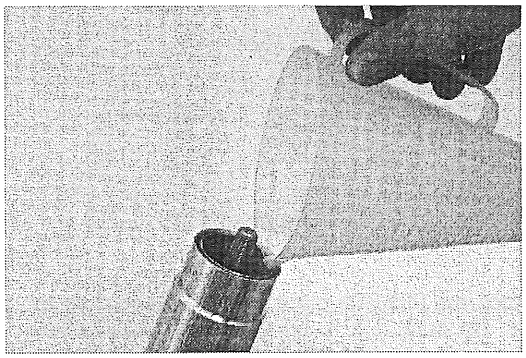

3. Slowly add recommended fork oil until holes near the top of the outer tube are covered by oil. (The holes are located about 35mm (1 1/2 inches) below the top of the outer tube).

NOTE
The oil quantity slightly exceeds fork capacity. Final fork oil level must be adjusted correctly as outlined later.

4. Set fork leg upright.
5. Lift outer tube up about 100-125mm (4-5 inches) from fully compressed position.

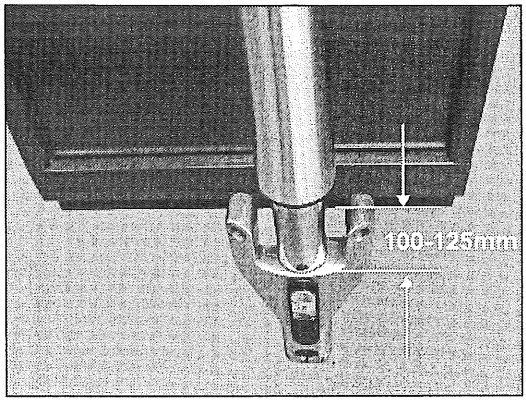

6. Seal top of tube firmly with your hand and push downward to build air pressure in tube. Hold for 10-15 seconds to force trapped air into the oil. Allow a few minutes for air to rise to the top of the oil in tube.

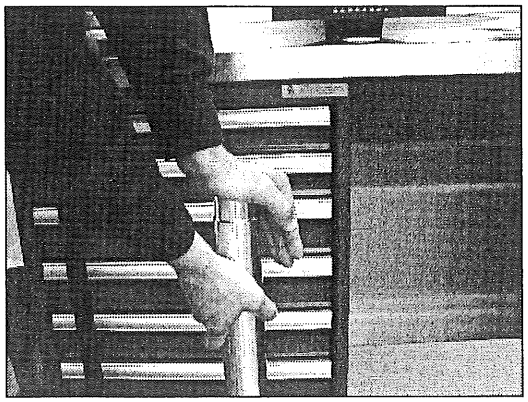

7. Bleed cartridge by moving shaft up and down to purge air. Begin with small strokes, increasing stroke length until all air is removed and damping is smooth and consistent.

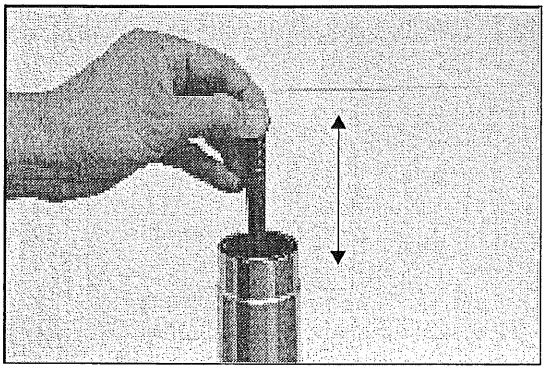

OIL LEVEL ADJUSTMENT

8. Slowly compress fork until it stops with dust seal against casting (at bottom of travel).

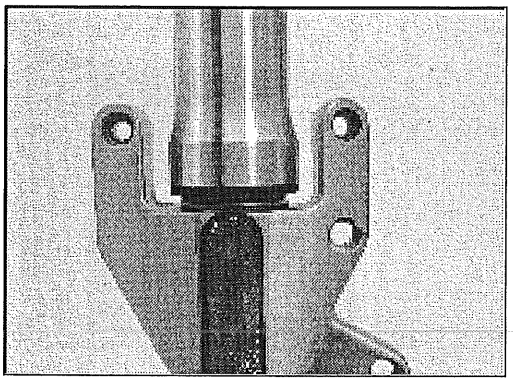

9. Adjust fork oil level tool (C) to specified level:
   FORK OIL LEVEL:

- Springs and spacers removed
- Tube upright and level
- Cartridge rod at bottom of travel

MEASUREMENT
Cross Country: **106 mm (4.17") +/- 1 mm (0.040")**
Magnum: **97 mm (3.82") +/- 1 mm (0.040")**

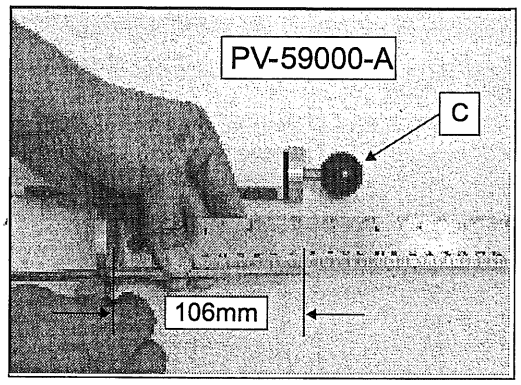

10. Insert tool into fork with plate squarely seated on top of tube. Be sure fork is upright, fully compressed, and cartridge rod is at bottom of travel.
11. Draw excess oil out to set proper oil level.

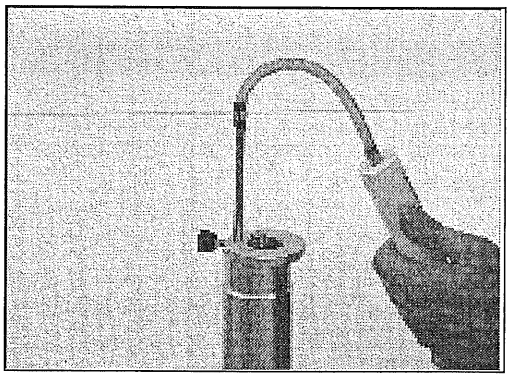

FORK SPRING INSTALLATION / FINAL ASSEMBLY

⚠ WARNING

Springs are compressed during this procedure. Wear a face shield to reduce the chance of injury.

12. Set axle end of fork tube in spring compressor.
13. Install lower spring (spring is non-directional).
14. Install lower spacer.
15. Install upper spring (A) (spring is non-directional).

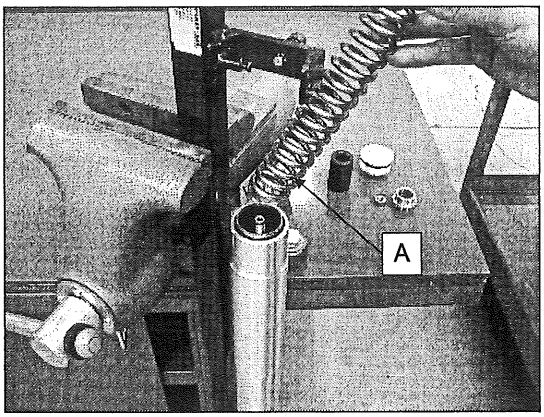

16. Engage all 3 pins (B) of compressor tool with coils of fork spring as done for disassembly.
17. Screw cartridge rod extension tool (C) onto cartridge rod and pull cartridge up to top of travel range.
18. Compress spring. Guide damper rod with extension tool while spring is being compressed.

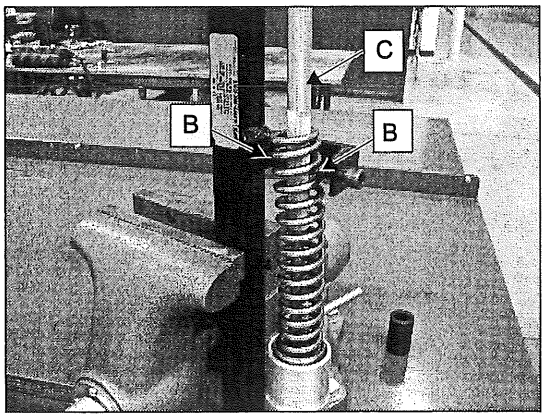

19. Hold damper rod up and remove cartridge shaft tool.
20. Install top spacer on spring.
21. Install nut with flattest surface facing up.

22. Screw nut onto cartridge rod at least 17 mm to ensure cap threads will be fully engaged when installed.

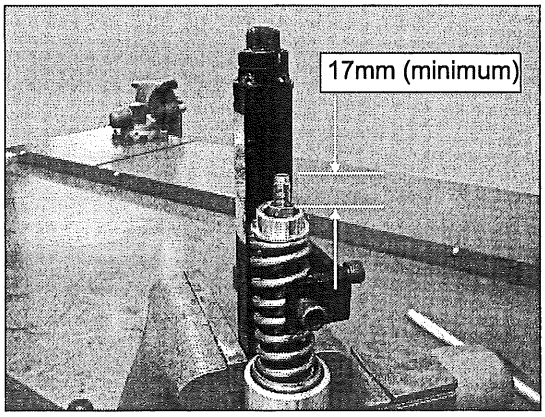

23. Install a new O-ring on fork cap and screw cap onto cartridge rod until bottomed. A gap should exist between cap and nut when cap is bottomed.

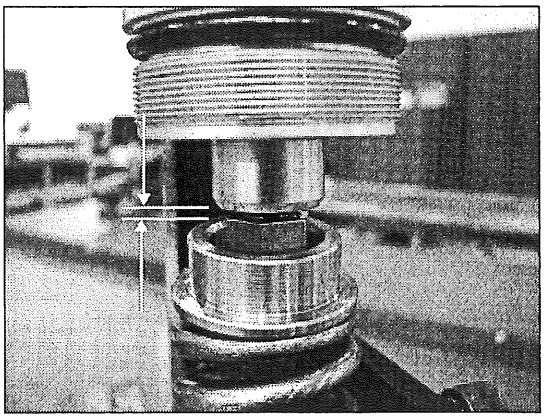

24. Screw nut upward until it contacts the cap.
25. *Tighten nut against cap.* Hold nut and torque cap to specification.

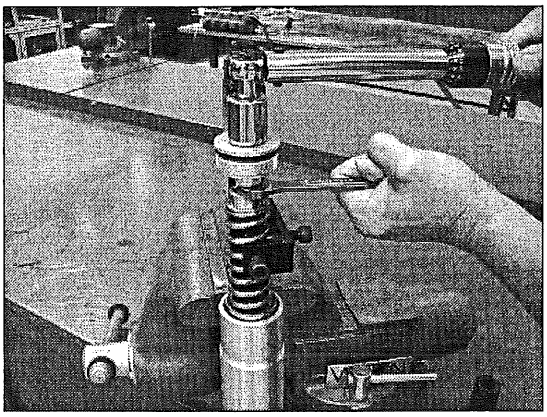

TORQUE
Cap Nut: **12 ft-lb (16 Nm)**

26. Screw cap into outer tube and torque to specification:

TORQUE
Cap: **17 ft-lb (23 Nm)**

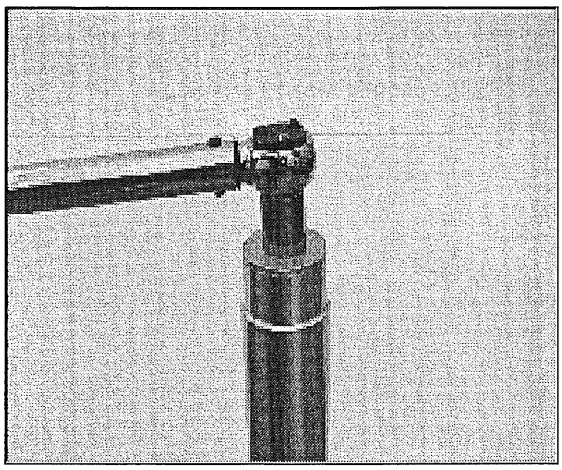

27. Wipe fork clean to remove all oil before installing in triple clamp (Fork Tube Installation Steps: Cross Country / Magnum, page 12.14).

TRIPLE CLAMP REMOVAL

1. Remove front fairing assembly (Cross Country).
2. Cut tie straps (A) on handlebars.
3. Loosen crown nut (B).
4. Remove fuel tank (Fuel Tank Removal, page 5.19) or cover the tank to protect it tank from damage from brake fluid, loose parts, or handlebar switches (fork stop will not function with fork tubes removed).
5. Disconnect clutch cable at handlebar.
6. Disconnect switch wiring inside headlamp.
7. Remove throttle cables from throttle reel bracket and from throttle reel. Pull cables through top triple clamp.
8. Securely support the vehicle with front wheel elevated.

⚠ WARNING
Care should be taken to be sure the motorcycle will not tip or fall while elevated. Severe personal injury or death could occur if the motorcycle tips or falls.

9. Remove front wheel (Front Wheel Removal, page 12.26) and fender (Front Fork Attachments: Cross Country / Magnum, page 12.9).
10. Remove fork tubes (Front Fork Removal, page 12.30).
11. Remove brake line manifold from lower triple clamp.

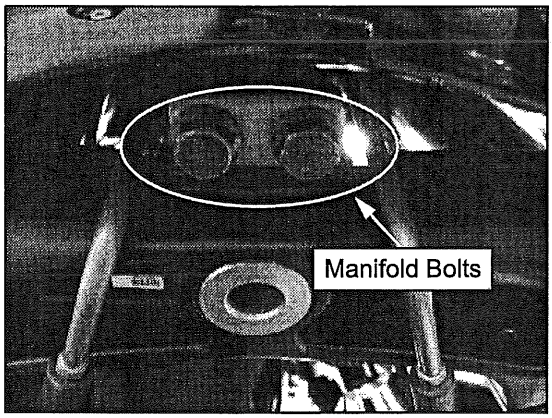

12. Loosen crown nut (E) on upper triple clamp (30 mm socket).
13. Remove brake line from front master cylinder. Cover end of line and master cylinder with a clean, lint-free cloth to capture any spilled brake fluid.

14. Pull brake line through top triple clamp (do not kink the brake line) and temporarily re-connect it to the master cylinder.
15. Slide upper triple clamp off steering stem with spacer (F).
16. Remove stem adjuster nut (G) with Victory spanner socket (PV-43508). *Support lower triple clamp while removing the adjuster nut.*

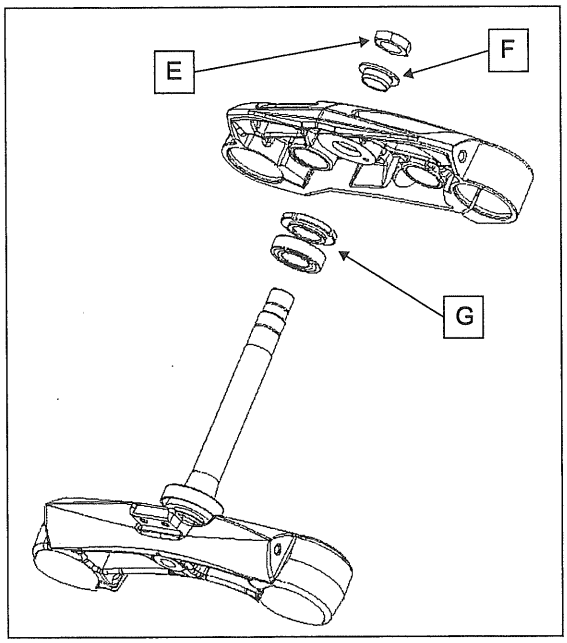

17. Remove upper steering head roller bearing from the frame.
18. Remove lower triple clamp / steering stem with bearing.

STEERING HEAD BEARING INSPECTION (TRIPLE CLAMP REMOVED)

Refer to Front Fork / Suspension Inspection, page 2.37 for inspection if front end is assembled.

1. Inspect lower bearing race for pitting, dents, or signs of wear on the bearing surface. Inspect roller cage for cracks or damage. Replace bearing and race as an assembly if any of the above is evident.
2. Inspect upper bearing for smooth rotation and minimal movement between the inner and outer race. Replace bearing if not smooth or if ANY movement can be detected between the inner and outer race.

TRIPLE CLAMP INSTALLATION

1. Apply Victory All Purpose grease to lower bearing and to bearing surface of lower race.
2. Install lower triple clamp / steering stem into frame.
3. Install upper bearing (A) onto stem and push it down until seated in upper bearing race of frame.
4. Screw adjuster nut (B) (shoulder side down) onto the stem and hand tighten.
5. Turn triple clamps fully to the right to place lower triple clamp against the fork stop.
6. Torque stem nut to specification using Victory spanner socket PV-43508.

TORQUE
Stem Nut: **29 ft-lb (39 Nm)**

7. Turn lower triple clamp from lock to lock five times.
8. Turn lower triple clamp to the FULL LEFT position against the fork stop and hold it in position.
9. Place a mark on the frame in alignment with one of the slots (C) on the steering stem nut for reference later.
10. *Loosen* adjuster nut 90 degrees (1/4 turn) so the reference mark on frame (from Step 9) is aligned with the next one of the four slots on the stem nut.
11. Set upper triple clamp in place on stem. Install spacer (D) and crown nut (E).

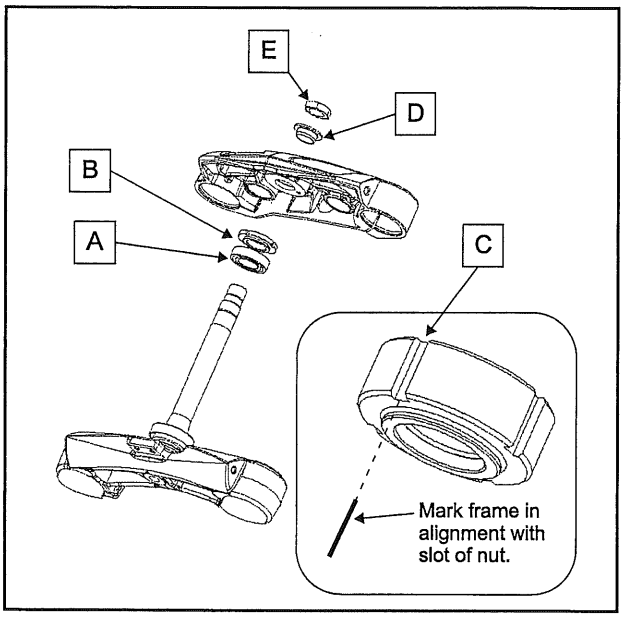

12. Tighten steering stem nut by hand.

NOTE
Crown nut will be tightened in a later step.

13. Install fork tubes through lower triple clamp and slide upward until tube is (approximately) 75% engaged in upper clamp.
14. Tighten (4) LOWER triple clamp pinch bolts evenly, enough to hold tubes in place.
15. Fully tighten crown nut to specification using spanner socket PV-43508.

TORQUE
Crown Nut: **72 ft-lb (97 Nm)**

16. Follow fork tube installation steps on Fork Tube Installation Steps: Cross Country / Magnum, page 12.14 to install tubes to proper height in triple clamps and to torque pinch bolts to specification in proper sequence.
17. Install front fender (Front Fork Attachments: Cross Country / Magnum, page 12.9) and front wheel (Cast Front Wheel Assembly View — Cross Country / Magnum, page 12.16).
18. Remove front brake line from master cylinder and route through right side opening in top triple clamp. Connect brake line to master cylinder using new sealing washers and torque banjo bolt to specification.

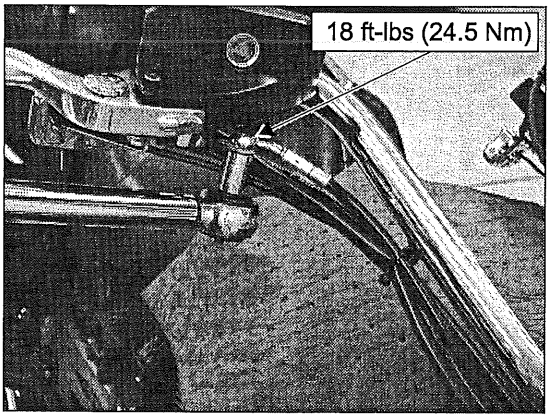

TORQUE
Banjo Bolt: **18 ft-lb (25 Nm)**

19. Install brake line manifold to lower triple clamp. Torque fasteners (F) to specification.

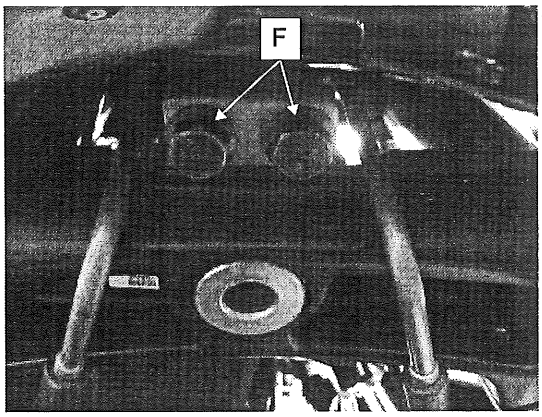

TORQUE
Brake Line Manifold Fasteners: **96 in-lb (11 Nm)**

20. Route throttle cables and right handlebar switch wiring through right side opening in top triple clamp. Throttle cables route between handlebar and brake line, crossing over the top of the brake line at the bottom of handlebars as shown below.
21. Route left handlebar switch wiring through opening in left side of top triple clamp.

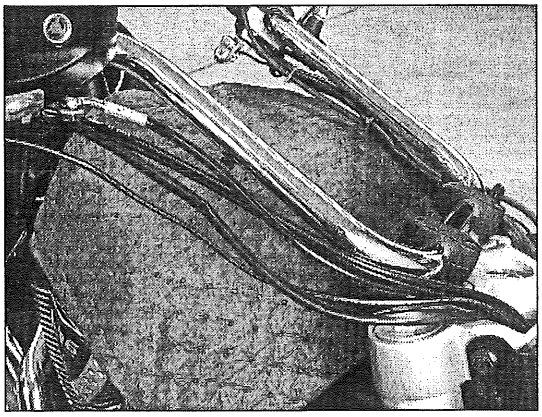

22. Route clutch cable behind other cables and wires, across steering head and up through left opening in top triple clamp to clutch lever perch.

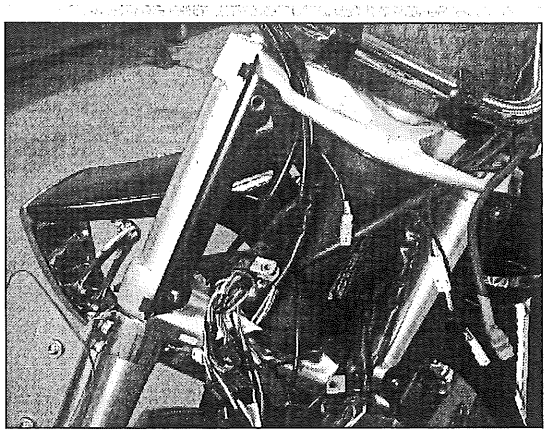

23. Secure brake line, cables and switch wiring firmly to the handlebars on both left and right sides with new tie strap through dart (G) on handlebars. Place another new strap around cables and wiring at the bottom of the handlebars (H). This strap secures cables and wiring only - do not secure the strap to the handlebars.

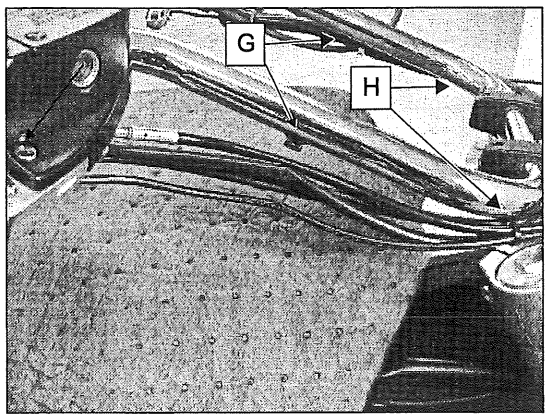

24. Install a new tie strap in the dart at the front right side of steering head. Loosely bundle the clutch cable with the throttle cables (routed on top of clutch cable) as shown below. DO NOT pull this tie strap tight. The cables must be able to move freely in this strap.

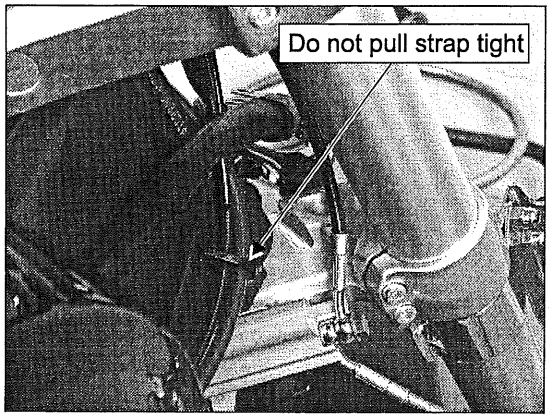

25. Refer to illustrations on Fork Assembly - Cross Country / Roads, page 12.10 to re-assemble any remaining parts. To install fuel tank, see Fuel Tank Installation, page 5.20.
26. When all parts are assembled, verify all fasteners are installed and properly torqued.
27. Adjust clutch and throttle cable free play and operation as outlined in Throttle Cable Free Play, page 2.13.

STEERING HEAD BEARING REPLACEMENT

Lower Race Removal:

1. Drive lower bearing race out of frame with a long pin punch through the top steering head opening. Tap alternately on opposite sides to keep the bearing race moving straight out of the steering head.

Lower Race Installation:

2. Clean the bore in the steering head thoroughly.
3. Wipe a light film of Victory all purpose grease on the outer surface of the new bearing race and on the surface of the bearing bore in the steering head.
4. Select an arbor that is slightly smaller than the outside diameter of the new bearing race.

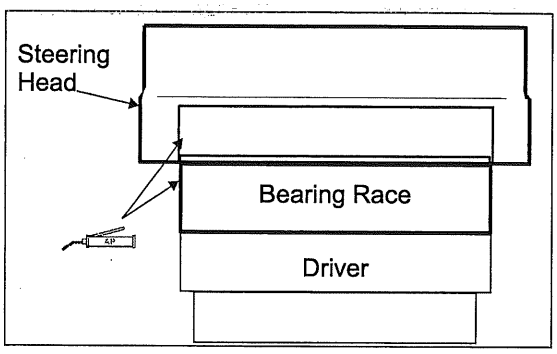

5. Drive new race into steering head evenly until fully seated.
6. Wipe any grease from bearing surface and surrounding area, then apply new Victory All Purpose Grease liberally to bearing surface of outer race.

Lower Bearing Removal:

7. Place level blocking on the table of a hydraulic press.
8. Place lower triple clamp on blocking with stem upright.
9. Move blocks inward so lower triple clamp is supported as close as possible to the base of the steering stem, leaving clearance (A) for the stem to pass between the support blocks when pressed in Step 4.
10. Place an aluminum spacer with a minimum thickness of 1/2 inch (12mm) (B) between press ram and threaded end of steering stem to prevent thread damage.
11. Place soft metal shims as required between press plates and triple clamp so clamp is fully supported and stable.

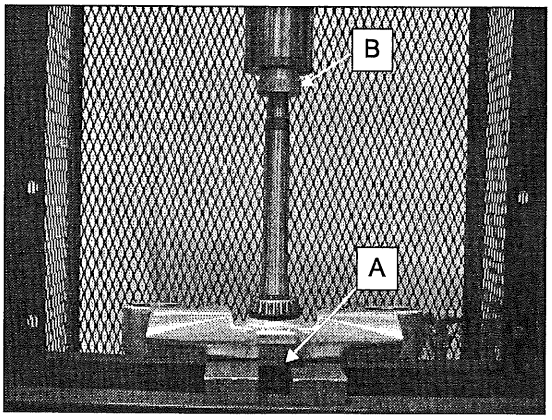

12. The stem may fall when pressed out of the triple clamp. Place shop towels in a wood or cardboard box under the press area to prevent damage to threads of stem.

⚠ WARNING

A press force of 1000 pounds (454 kg) or greater is required for stem and bearing removal. Be sure all protective guards or shields are in place before you begin the press operation.

13. Be sure a protective shield or cage door is in place and secured before pressing the stem.
14. Move press ram into position firmly against the spacer to be sure the assembly is stable, then press the stem downward until bearing is presses off the stem.
15. Remove old bearing from stem and discard.

    Lower Bearing Installation:

    A bearing press sleeve with the specifications listed below is required for bearing installation.

Material: Standard Steel Pipe (Commercially Available)
Ends smooth, square, and de-burred.

Outside Diameter: 1.5 In. (38 mm)
Inside Diameter: 1.25 In. (32 mm)
Length: 10.0 In. (255 mm)
Wall Thickness: 1/8 in. (3.2 mm)

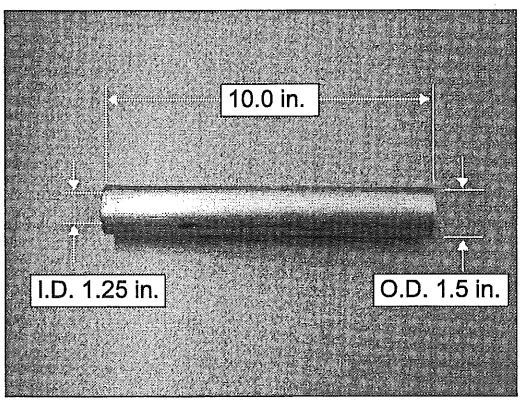

Press Sleeve

16. Clean the press surfaces (C) of stem and triple clamp and apply a thin film of Victory All Purpose Grease (2872187).
17. Be sure stop ring (D) is in place on the stem and fully seated in the groove.

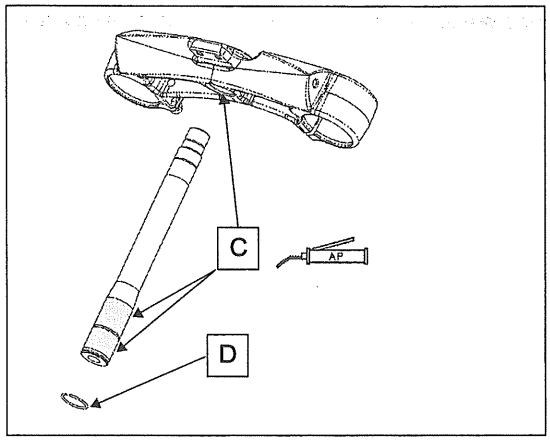

18. Place stem through triple clamp.
19. Slide a new bearing over the stem with sealed edge toward triple clamp.
20. Place bearing press sleeve (E) over stem. Invert the assembly and center it on the press plate and the ram.

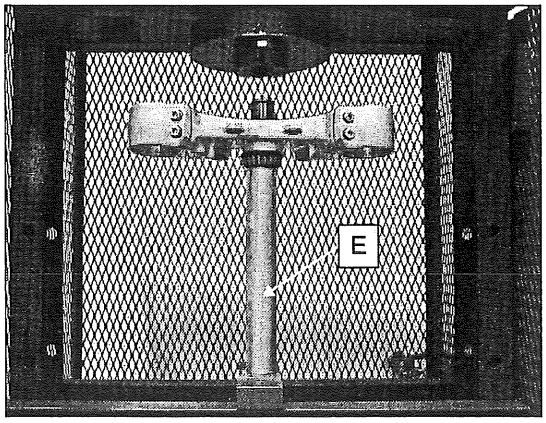

21. Place a suitable arbor (F) between the press ram and the end of the steering stem. The arbor must be slightly smaller than the O.D. of the stem base.

22. Be sure press sleeve is centered on the inner bearing race and does not contact the bearing cage (G).

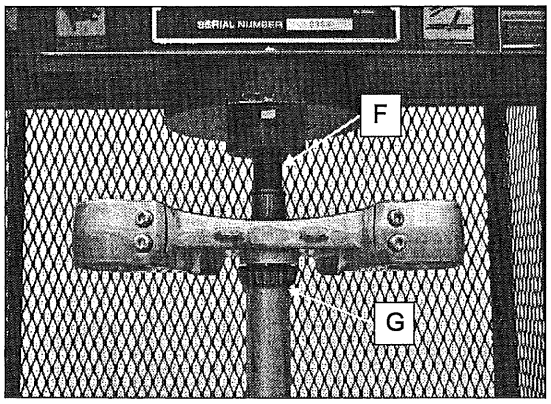

23. Close the cage or place the protective guard over the press.

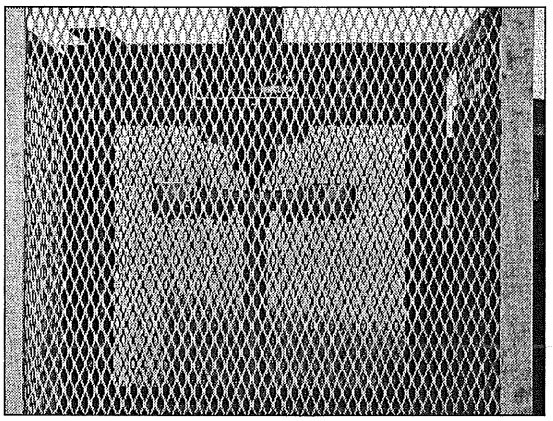

24. Press the stem and bearing assembly until fully seated.
25. After the press operation is completed, release ram pressure.
26. Inspect the stop ring (H) to be sure it is fully seated against the triple clamp surface.

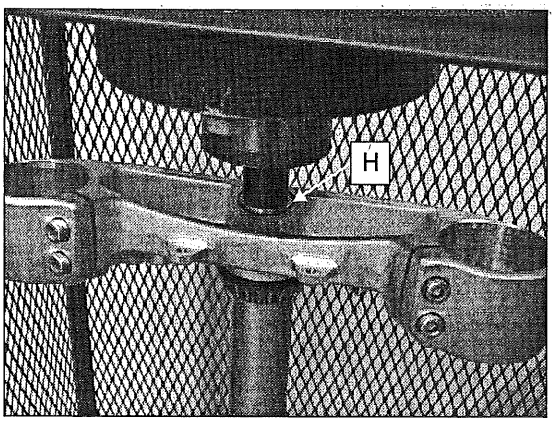

27. Install triple clamps. Triple Clamp Installation, page 12.44

STEERING HEAD BEARING ADJUSTMENT

Steering Head Adjustment / Top Triple Clamp: Cross Country / Magnum, page 12.15 Or refer to the triple clamp installation procedure on Triple Clamp Installation, page 12.44.

HEATED GRIPS

TROUBLESHOOTING:
To Measure Individual Grip Wire Resistance:
Black - Brown: 13 Ohms
Black - Blue: 8 Ohms

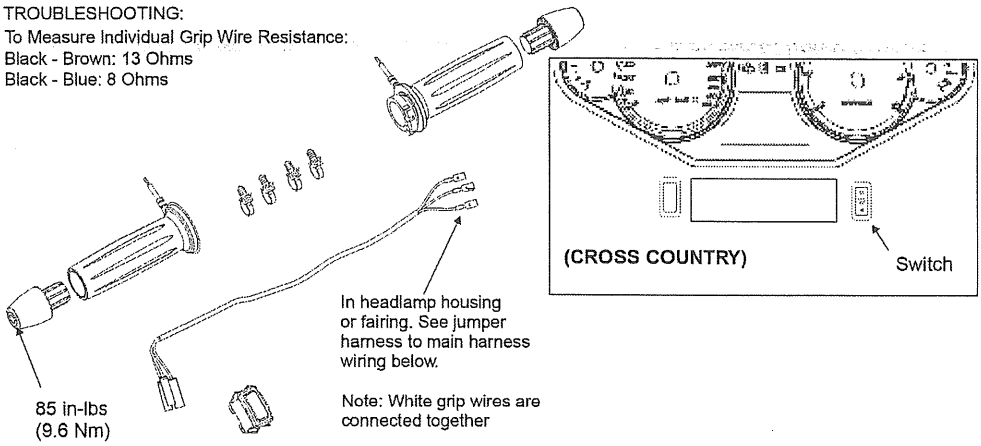

TROUBLESHOOTING:
To Measure Grip Resistance at Switch:
(This test measures the resistance of both grip heater grids in parallel).
Disconnect DB (High) and BN (Low) wires from switch.
Measure resistance between DB wire and ground: Approx 4 Ohms
Measure resistance between BN wire and ground: Approx 6.5 Ohms
If resistance is out of range, test each grip resistance individually.

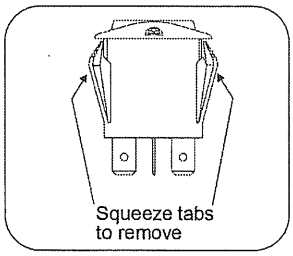

JUMPER HARNESS TO MAIN HARNESS WIRING

LB = Light Blue; BU = Blue; DB = Dark Blue; BN = Brown; BK = Black; WH = White; PK = Pink

Jumper Harness Wire Color → / Main Harness Wire Color ↓	BK	LB	DB	BN
BK	●			
BU/PK		●		
BU			●	
BN				●

SWITCH CONTACTS			
Wire Color →	BN	LtBU	DB
HIGH		●	●
OFF		●	
LOW	●	●	

CONNECTIONS TO SWITCH

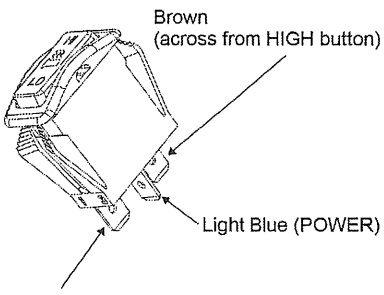

12

TROUBLESHOOTING

PROBLEM	POSSIBLE CAUSE	REPAIR RECOMMENDED
Heavy Steering	Steering Stem Nut Over Tightened	Torque to specification
	Damaged Steering Stem Bearings or Races	Replace
	Bent Steering Stem	Replace
	Front Tire Damaged or Worn	Replace
	Low Tire Pressure	Inflate to specification
Pulls to One Side or Wanders	Damaged Steering Stem Bearings or Races	Replace
	Steering Stem Nut Over Tightened or Under Tightened	Torque to specification
	Low Tire Pressure	Inflate to specification
	Rear Wheel Not Aligned Correctly	Align
	Bent Front Axle	Replace
	Damaged or Excessively Worn Front Tire / Incorrect Tire	Replace
	Damaged Wheel Bearings	Replace
	Damaged Swing Arm Bearings	Replace
	Loose Swing Arm Pivot Nut	Torque to specification
	Bent Frame or Swingarm	Replace
Handlebars Oscillate (Wobble)	Bent Front Axle	Replace
	Wheel Has Excessive Runout	Spoke: True or Replace (Billet)
	Tire Mounted Incorrectly	Check Mounting and Balance
	Damaged Tire / Worn Tire	Replace
	Loose Steering Stem Nut	Torque to specification
	Incorrect Tire	Replace
	Incorrect Tire Pressure	Correct
Noise Coming From Front Suspension	Worn Fork Bushings	Rebuild Forks
	Low Fork Fluid	Determine Cause/Replace Fork Oil
	Loose Fasteners	Torque to specification
	Loose Steering Stem Bearings	Determine Cause/Correct

PROBLEM	POSSIBLE CAUSE	REPAIR RECOMMENDED
Front Wheel Oscillates (Wobbles)	Bent Front Rim	Replace
	Damaged Front Wheel Bearings	Replace
	Damaged or Incorrect Tire	Replace
	Loose Axle or Axle Pinch Bolts	Torque to specification
	Fork Tube Height Unequal (L&R)	Install Correctly
	Fork Oil Level Unequal	Set Correctly
	Fork Spring Free Length Different Between Right & Left	Replace
	Wheel Assembly Out-of-Balance	Balance
	Low Tire Pressure	Inflate to specification
Front Suspension Too Soft	Weak Fork Springs	Replace
	Low Fork Oil Level	Determine Cause/Replace Fork Oil
	Wrong Weight Fork Oil	Replace
	Contaminated and/or Deteriorated Fork Oil	Replace
	Low Tire Pressure	Set Correctly
Front Suspension Too Hard	Tire Pressure Too High	Set Correctly
	Bent Fork Tubes	Replace
	Wrong Weight Fork Oil	Replace
	Too Much Fork Oil	Set Correctly
	Plugged Oil Passages	Rebuild Front Forks
	Damaged Sliders	Replace
	Forks Binding, Incorrect Assembly Front Fender and/or Front Wheel	Correct
Wheel Turns Hard	Damaged Wheel Bearings	Replace
	Front Axle Bent	Replace
	Brake Dragging (Hydraulic or Mechanical Problem)	Repair as Necessary
	Brake Dragging (Bent Disc)	Replace
	Improper Assembly After Repairs	Correct as Necessary

NOTES

CHAPTER 13
REAR WHEEL / SUSPENSION

GENERAL INFORMATION....13.2
WARNINGS AND PRECAUTIONS....13.2
SPECIAL TOOLS....13.2
SPECIFICATIONS - REAR WHEEL AND SUSPENSION....13.3
ASSEMBLY VIEWS / TORQUE....13.4
REAR AXLE & ADJUSTERS....13.4
SWINGARM & SUSPENSION....13.5
CAST REAR WHEEL....13.6
BILLET REAR WHEEL ASSEMBLY VIEW - MAGNUM / X-1....13.7
SPOKED REAR WHEEL....13.8
REAR WHEEL SERVICE....13.9
REAR WHEEL REMOVAL....13.9
REAR AXLE INSPECTION....13.10
REAR WHEEL INSPECTION....13.11
REAR WHEEL BEARING INSPECTION....13.11
WHEEL BEARING REMOVAL (TYPICAL)....13.11
WHEEL BEARING INSTALLATION (TYPICAL)....13.13
BRAKE DISC REMOVAL....13.15
BRAKE DISC INSTALLATION....13.15
REAR SPROCKET REMOVAL....13.16
REAR SPROCKET INSTALLATION....13.16
REAR WHEEL INSTALLATION....13.16
REAR SHOCK....13.19
REAR SHOCK SERVICE DATA....13.19
REAR SHOCK REMOVAL....13.20
REAR SHOCK AND ROCKER INSPECTION....13.22
SHOCK ABSORBER INSTALLATION....13.24
SWINGARM SERVICE....13.26
SWING ARM REMOVAL....13.26
SWING ARM BUSHINGS / BEARING REPLACEMENT....13.27
SWING ARM INSTALLATION....13.28
TROUBLESHOOTING....13.30

GENERAL INFORMATION

WARNINGS AND PRECAUTIONS

⚠ WARNING

This motorcycle was produced with the designated tires as original equipment. The testing to ensure stability and superior handling was done using the OEM tires. Using non-OEM tires could result in poor motorcycle stability and handling, which can lead to a crash resulting in serious injury or death. Use only the recommended tires inflated to the recommended tire pressures.

Tubeless tires are used on certain Victory models. Operating the motorcycle with damaged rims creates a safety hazard including air pressure loss, steering imbalance and/or reduced steering control. Do not attempt to repair or straighten damaged cast or billet rims.

Victory Cross Roads Classic and Hard-Ball models are equipped with spoked tube-type rims. Small imperfections in the alignment of these rims can be corrected using an approved wheel truing stand and spoke wrench (commercially available). See Wheel Truing, page 14.14 for details.

Always use genuine Victory parts or equivalent so that quality is not compromised. The use of tire valves and valve cores other than original equipment replacement Victory parts could cause tire deflation which may lead to loss of control, resulting in injury or death. Do not allow any motorcycle to leave your service area without tire valve caps securely installed.

- The rear shock absorber is a sealed unit and cannot be re-built.
- Refer to Chapter 2 for maintenance of rear wheel & suspension components, and suspension ride height adjustment.
- Refer to Chapter 15 for brake system service.
- Refer to Chapter 14 for tire removal, repair, & balancing.

SPECIAL TOOLS

SPECIAL TOOL	PART NUMBER
Wheel Bearing / Stem Bearing Race Installation Set	PV-43515
Platform Jack or Hoist	Commercially available
Blind Bearing Remover Set (for wheel bearings)	PV-43551
Lower Shock Spherical Bearing Tool	PV-49060
Victory Air Pump & Gauge (Rear Shock Air Pressure)	2876654 or PV-48909

SPECIFICATIONS - REAR WHEEL AND SUSPENSION

ITEM		STANDARD	SERVICE LIMIT
Axle Runout			0.20 mm (0.008")
Rear Shock Absorber		Single, Air Adjustable Shock (Sealed unit not serviceable)	DO NOT EXCEED 72 PSI operating pressure.
Rear Tire Size / Type		Dunlop Elite 3 - 180/60R16 M/C 80H Radial	–
Rear Wheel Runout Cast and Billet (Spoked)	Axial	0.80 mm (0.030 inch)	2.0 mm (0.080") (0.80 mm (0.030"))
	Radial	0.80 mm (0.030 inch)	2.0 mm (0.080") (0.80 mm (0.030"))
Rear Wheel Size / Type		5.0 x 16²	–
Rear Wheel Travel		4.7 in. (12 cm) — Cross Country 3.5 in. (9 cm) — Magnum / X-1	–
Shock Free Length (Eye to eye center)		325.3 mm (12.8 inch) +/- 3mm (.120 in)	–
Suspension Ride Height Measurement		Perform Air Pressure Adjustment For Rider Weight and Load with motorcycle on side stand. (See Rear Suspension Air Pressure Adjustment, page 2.35)	DO NOT EXCEED 72 PSI operating pressure.
Swing Arm Pivot Shaft Runout		Not Applicable	0.20 mm (0.008")
Swing Arm Pivot Shaft O.D.		16.20 - 16.25 mm (0.638 - 0.640")	16.08 mm (0.633")
Tire Pressure		52 mm	–
Wheel bearing O.D.		52 mm	–
Wheel bearing I.D.		20 mm	–
Wheel bearing spacer length		171.3 - 171.5mm (6.744 - 6.752")	Less than 171.3 mm (6.744")
Brake Disc Screws		22 ft-lbs (30.0 Nm)	Install NEW screws if loosened or removed.
Rear Axle Nut		65 ft-lbs (88.1 Nm)	–
Rear Axle Adjuster Nut		8 ft-lbs (10.8 Nm)	–
Rocker Arm Pivot Shaft Retaining Bolts		18 ft-lbs (24.5 Nm)	–
Sprocket Bolts		70 ft-lbs (95.0 Nm)	Torque in star pattern
Swing Arm Nut, Left Side		24 in-lbs (2.7 Nm)	Apply Loctite 262 (Red)
Swing Arm Nut, Right Side		65 ft-lbs (88.1 Nm)	–
Shock Mount Bolt (Lower)		60 ft-lbs (81.4 Nm)	–
Shock Mount Bolt (Upper)		54 ft-lbs (73.2 Nm)	–
Shock Pushrod Bolt (Lower)		60 ft-lbs (81.4 Nm)	–
Shock Pushrod Bolt (Upper)		54 ft-lbs (73.2 Nm)	–

ASSEMBLY VIEWS / TORQUE

REAR AXLE & ADJUSTERS

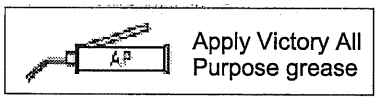

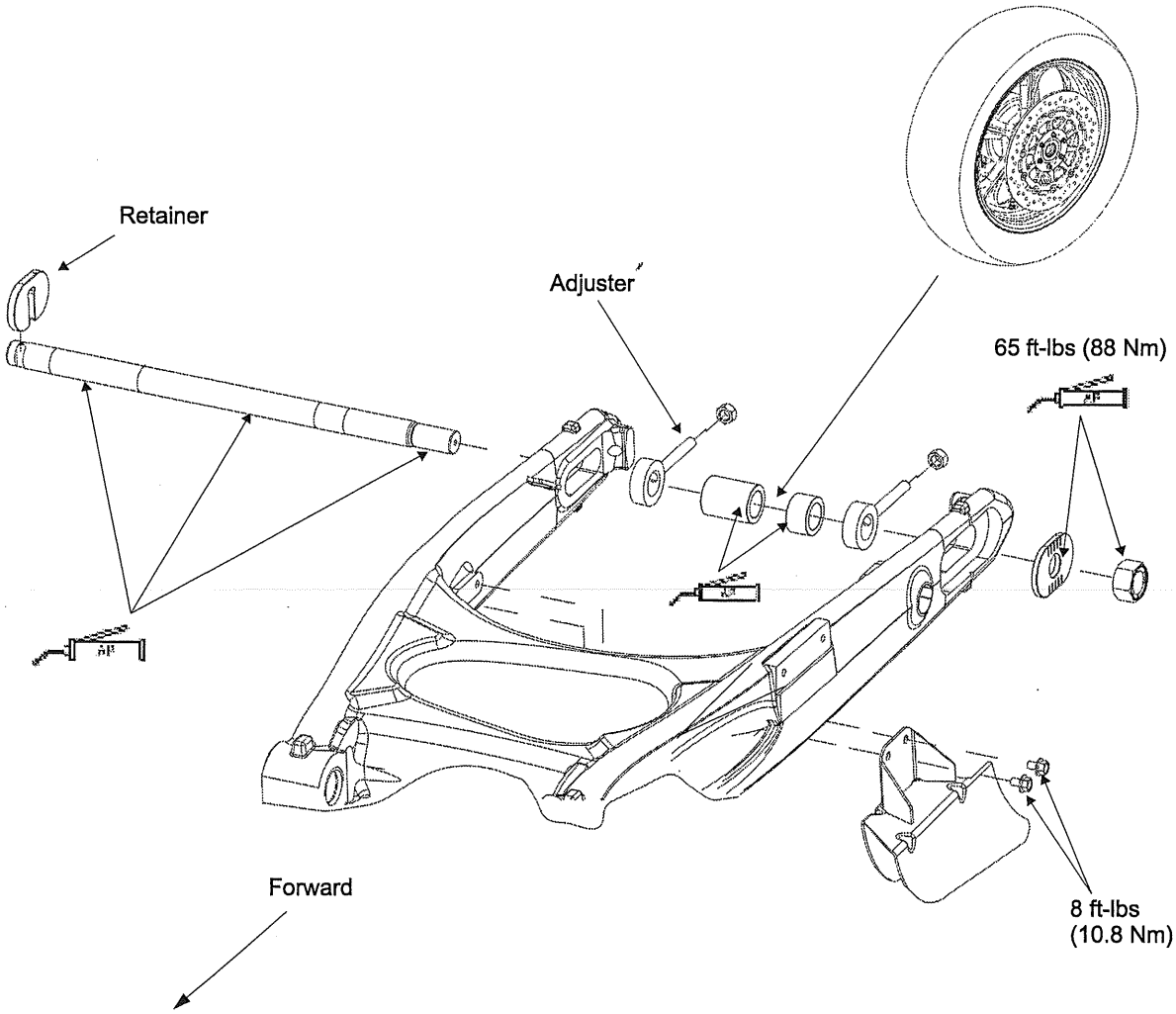

SWINGARM & SUSPENSION

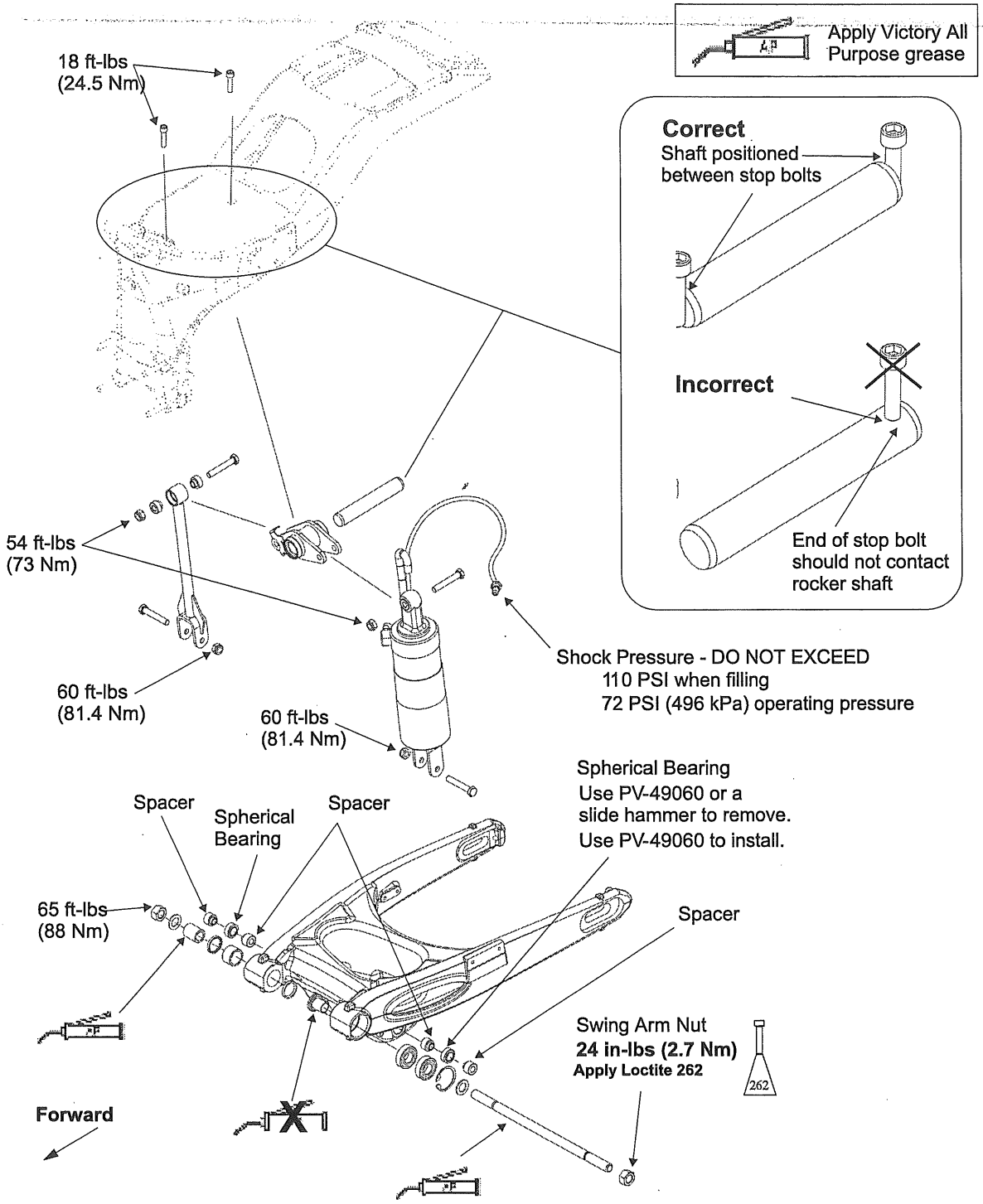

CAST REAR WHEEL

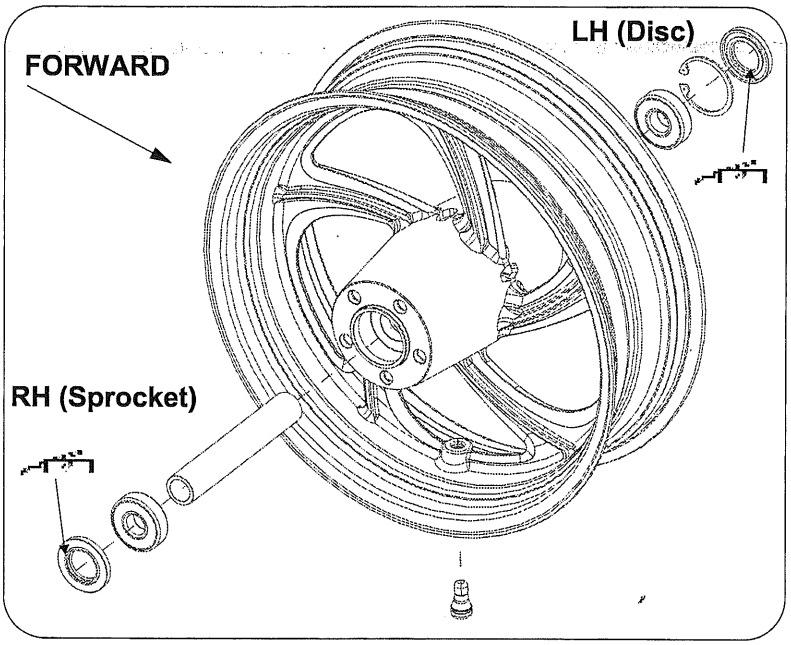

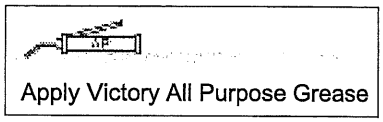

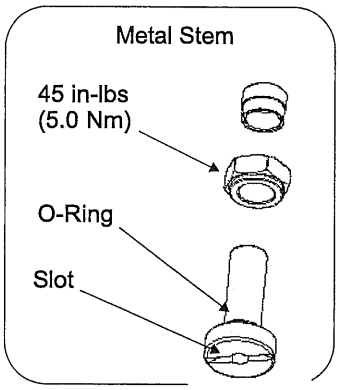

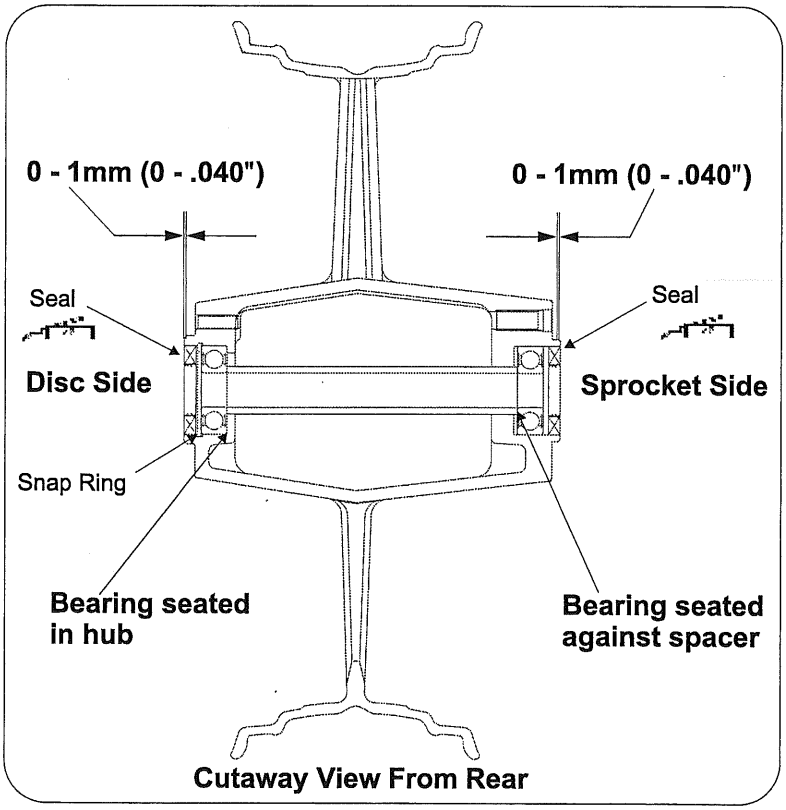

BILLET REAR WHEEL ASSEMBLY VIEW - MAGNUM / X-1

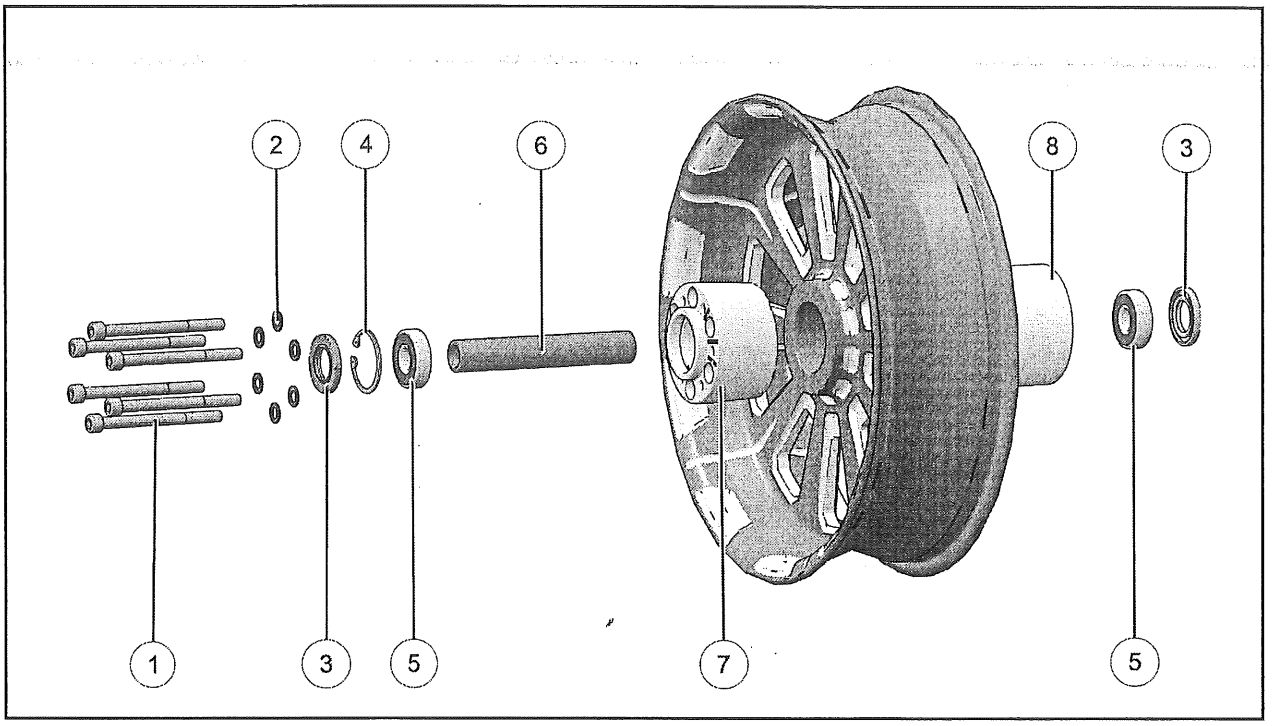

NUMBER	DESCRIPTION	TORQUE (IF APPLICABLE)
1	Bolt - 7/16-14 x 4 1/2" (QTY.6)	65 ft-lbs (88.5 Nm)
2	Washer (QTY.6)	–
3	Seal - 30 x 52 x 7 (QTY.2)	–
4	Retaining Ring - 52 x 2 (QTY.1)	–
5	Bearing - 20 x 52 x 15 (QTY.2)	–
6	Spacer - 171.5mm	–
7	Hub, LH (with ABS)	–
8	Hub, RH (sprocket side)	–

SPOKED REAR WHEEL

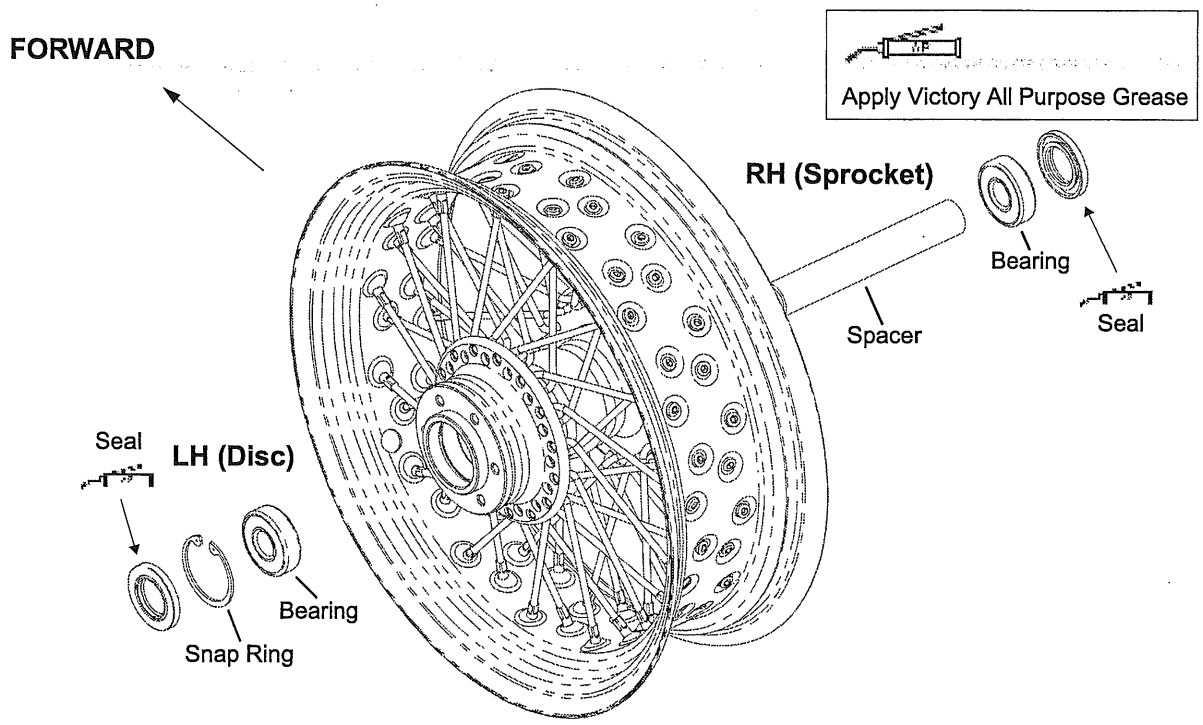

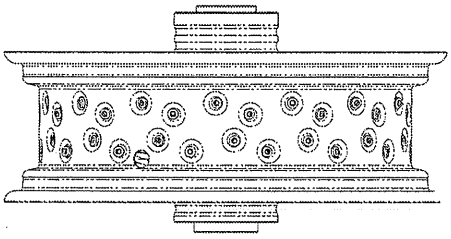

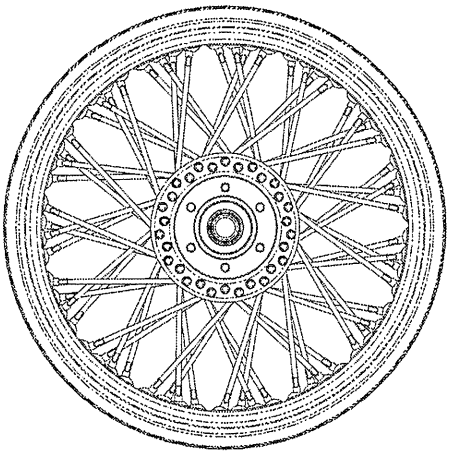

Cutaway View From Rear

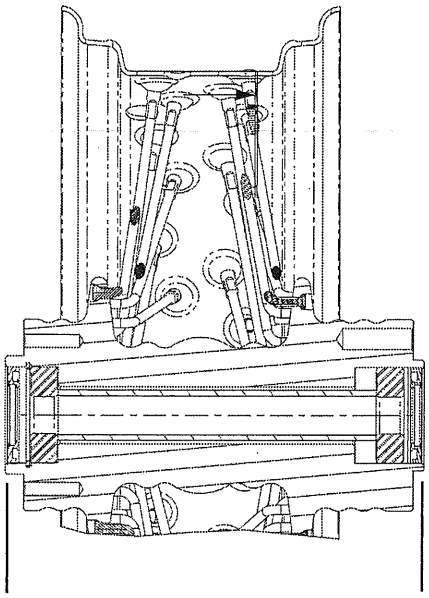

REAR WHEEL SERVICE

REAR WHEEL REMOVAL

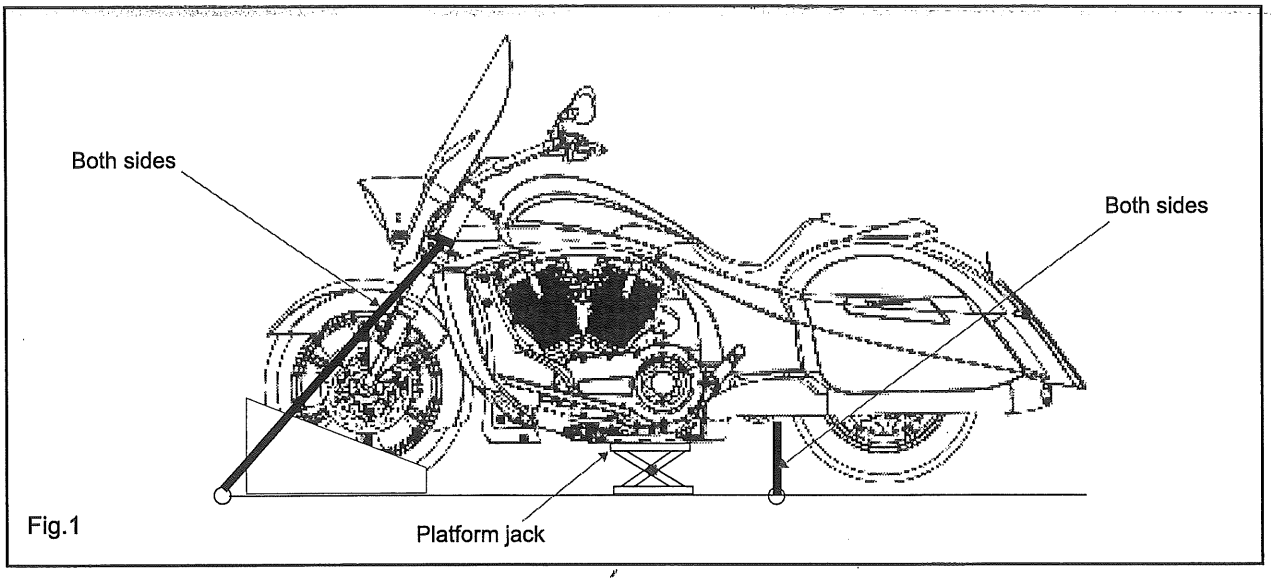

Fig.1

⚠ WARNING

Rear wheel removal involves supporting the machine with the rear end elevated. Take precautions so that the motorcycle is securely supported while the rear tire is off the ground. Severe personal injury or death can occur if the motorcycle tips or falls.

1. Secure motorcycle in a stand with straps (Fig. 1).
2. Place a platform jack (A) under the engine. Elevate the motorcycle enough to take the weight off the rear wheel, *but still leave the wheel touching the platform.*

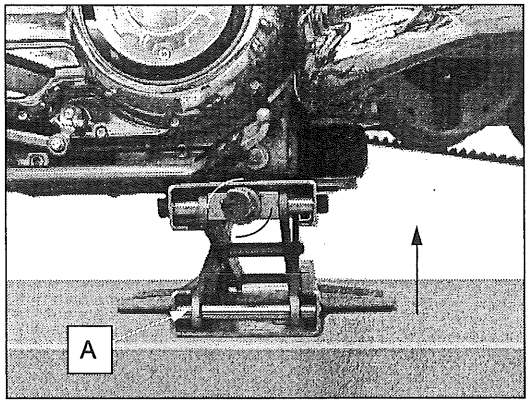

NOTE

Muffler removal is not required.

3. Remove the lower shock bolt and lower pushrod bolts (B) from the swingarm.

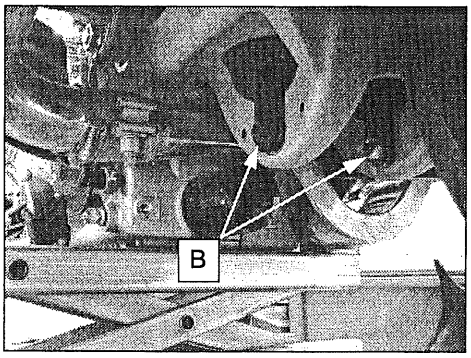

4. Raise the motorcycle high enough to gain access to the axle nut. Remove axle nut.
5. Using a soft-faced mallet, tap axle to the *right* until retaining plate is clear of the swingarm and remove plate.
6. Remove axle from right side of swing arm.

NOTE

Axle adjuster nuts do not have to be loosened or removed, however, belt tension and alignment must be inspected after assembly.

7. Elevate the motorcycle until the swingarm shock mount is raised a minimum of 12 inches (305 mm).

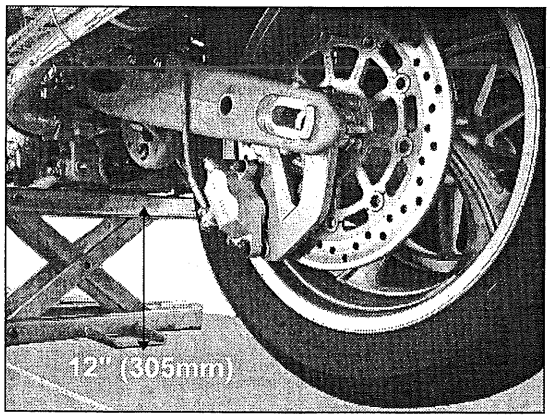

8. Remove the drive belt-side wheel spacer and disengage drive belt from rear sprocket.
9. Remove rear caliper carrier assembly from swing arm.

CAUTION

Do not allow rear brake caliper brake line or wheel speed sensor harness to hang or twist, damage may result.

10. Secure brake caliper assembly to swing arm with tie strap or support it so it does not hang by the brake line.
11. Remove rear wheel from left side of the motorcycle.

NOTE

Do not apply rear brake pedal once the brake caliper has been removed.

REAR AXLE INSPECTION

1. Place rear axle in V-blocks and measure runout. Compare to service limit onSpecifications - Rear Wheel And Suspension, page 13.3
2. Axle diameter should be measured on bearing surfaces at (D).

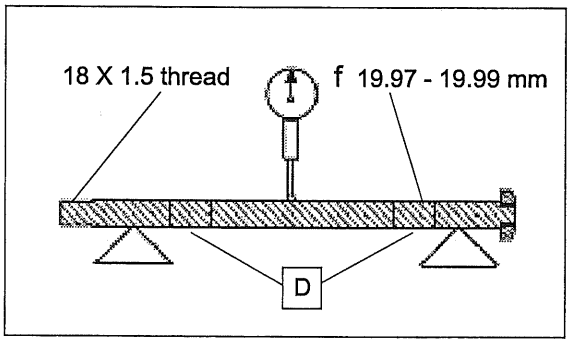

REAR WHEEL INSPECTION

NOTE

Wheel bearings must be in good condition.

1. Set up a dial indicator to measure axial and radial runout of the wheel. Refer to Visual Inspection & Runout, page 14.10 for procedure. Compare measurements to service limits.
2. Visually inspect wheel for cracks or other damage.
3. Replace wheel if it fails visual or measured inspection.

REAR WHEEL BEARING INSPECTION

NOTE

If possible, also inspect wheel bearings before removing the wheel from the vehicle. Do not remove bearings from wheel to inspect. Bearings cannot be reinstalled. Replace both bearings if one or both fail inspection, or if either bearing was removed.

1. Visually inspect integral bearing seal for damage.
2. Inspect bearing fit in wheel hub. Outer race of bearing must fit tightly in bore.
3. Slide axle into wheel. Check for smooth rotation and tight fit.

NOTE

Due to extremely close tolerances, the bearings must be inspected visually, and by feel. Look for signs of discoloration, scoring, galling, or contamination from moisture or dirt. Replace bearings if any of the above are present. Turn the inner race of the bearings. The bearings should turn smoothly and quietly. The inner race should be firm with minimal side to side movement and no detectable up and down movement.

WHEEL BEARING REMOVAL (TYPICAL)

CAUTION

Do not reuse bearings that have been removed.

NOTE

These instructions depict typical procedures to use the wheel bearing removal and installation tools. Also refer to instructions included with tool.

1. Remove wheel speed sensor tone ring and brake disc (Brake Disc Removal, page 13.15).

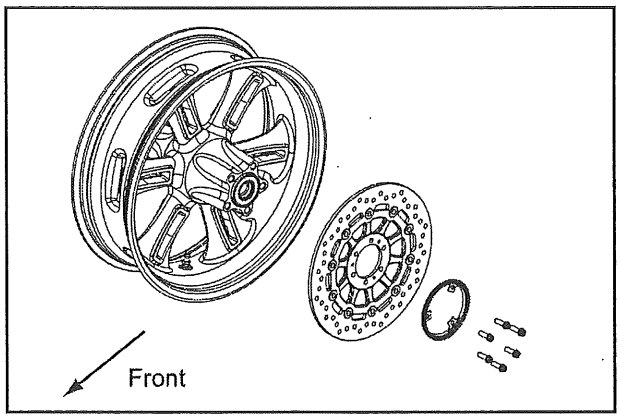

2. Remove sprocket (Rear Sprocket Removal, page 13.16).

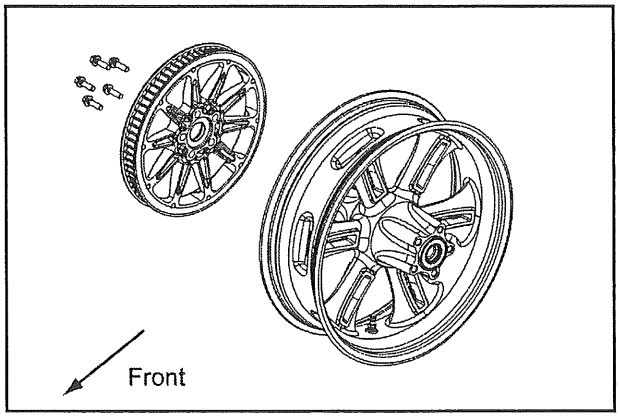

3. Protect hub. Pry seals out of hub on both sides.

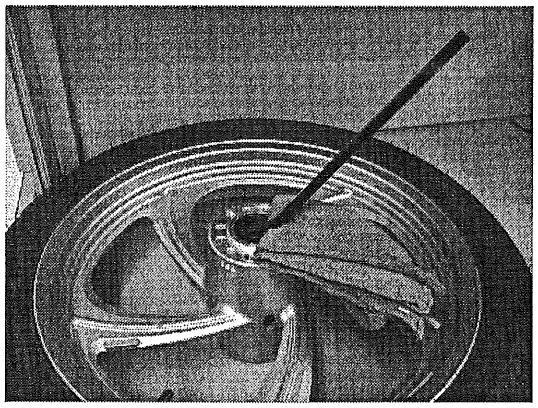

4. Remove snap ring from disc side.

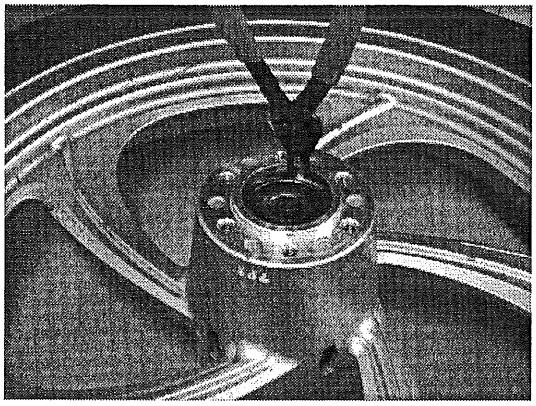

5. Install bearing remover element into bearing. Tighten bearing remover until firm. Do not over-tighten or tool may be damaged.

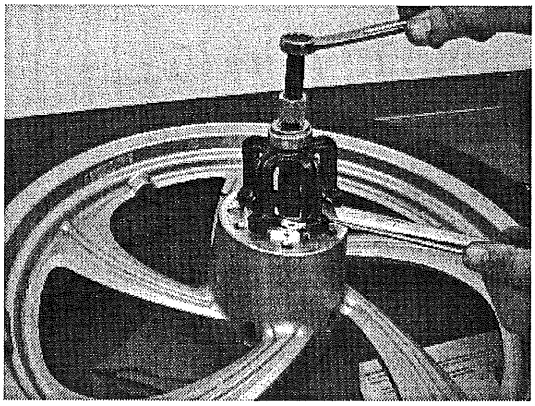

6. Remove bearing by tightening lower nut.

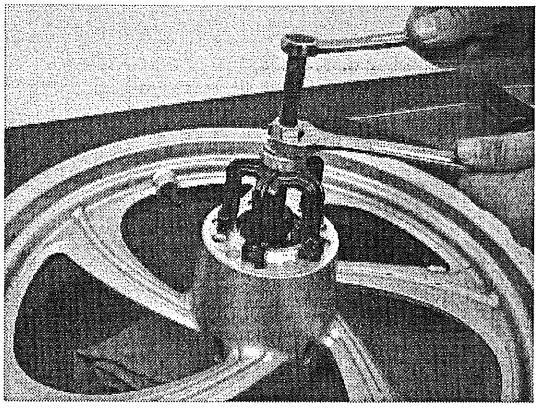

7. Remove spacer.

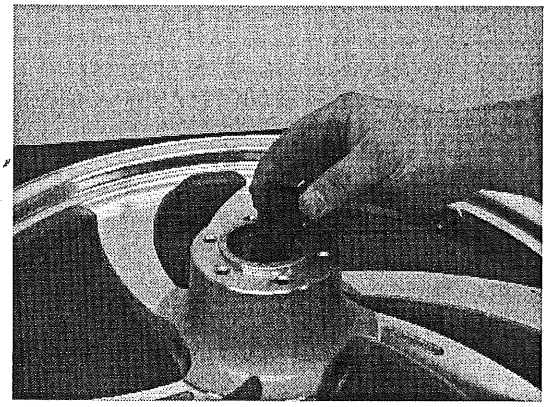

8. Extract or drive the opposite side bearing.

WHEEL BEARING INSTALLATION (TYPICAL)

1. Clean inside of wheel hub and bearing spacer. Replace spacer if worn beyond the service limit.

Standard: 171.30 - 171.50 mm (6.744 - 6.752″)

Service Limit: Less than 171.30mm (6.744″)

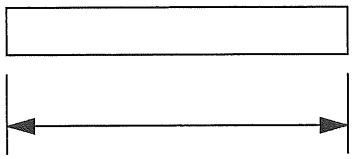

Cast, Billet and Spoked

Wheel Bearing Installation Set PV-43515

2. Slide threaded rod from PV-43515 through wheel hub. Place new wheel bearing (A) into *left* (disc) side of wheel with markings facing out (toward outside of hub).
3. Assemble tool with flat side of 51mm wheel bearing collar (B) against wheel bearing. This tool must be slightly smaller than O.D. of bearing and must be flat to support both *inner and outer race* equally. DO NOT pull or press on inner race of ball bearings or bearing will be permanently damaged!
4. Install tool bearing (C), washer (D), and nut (E) on threaded shaft.

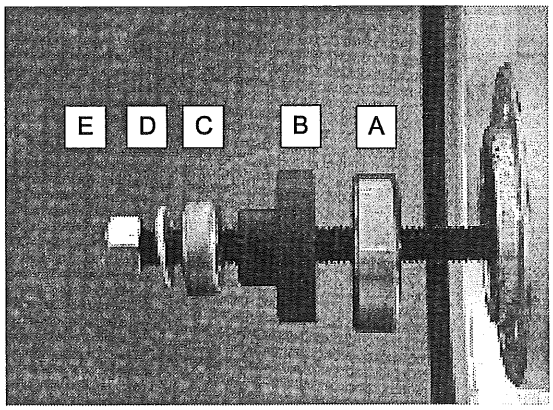

5. Install the other 51mm bearing tool (F) in bearing bore on right side of hub with flat washer and nut. Pull left bearing into hub by tightening nut on left side of tool until left bearing is *fully seated* in hub.

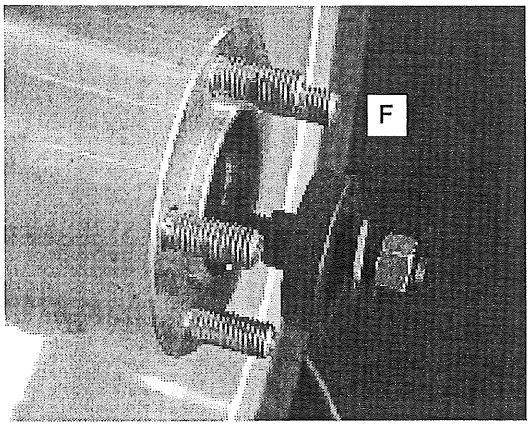

NOTE

DO NOT install retaining ring at this time.

6. Turn wheel over and install bearing spacer (G). Be sure spacer is centered on bearing.

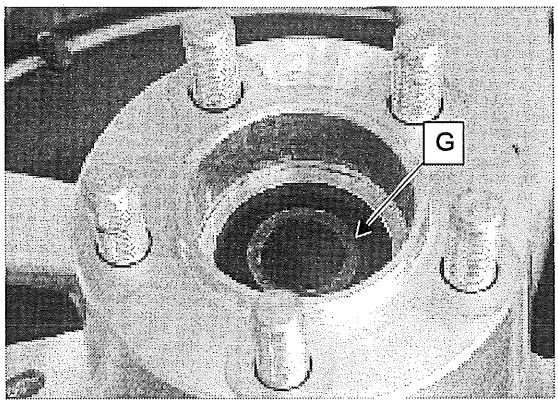

7. Assemble tool through left side with backing disc (or bearing tool) flat against left bearing. Be sure the tool supports both inner and outer race.

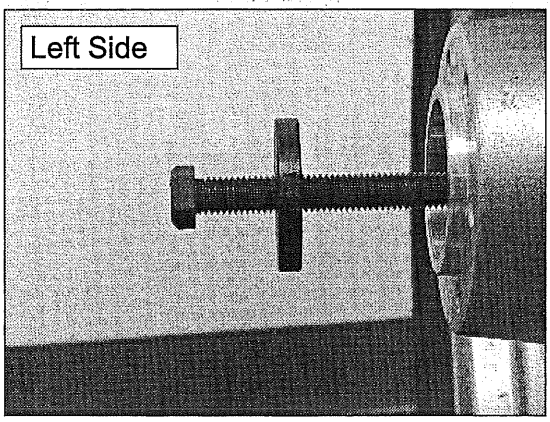

8. Place new wheel bearing (H) on threaded shaft (markings out) and start it squarely in the hub.
9. Install 51 mm wheel bearing installation tool with flat side against bearing, followed by tool bearing, flat washer, and nut.

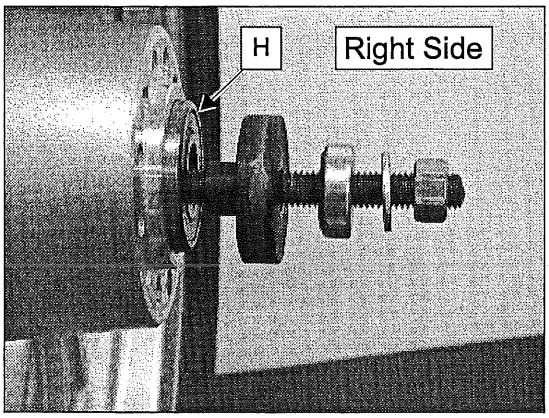

10. Keep the wheel positioned as shown to keep spacer centered during installation of right bearing.

11. Pull bearing in to right side of wheel until seated against spacer.
12. Remove tool and check that the spacer is centered and firmly trapped between bearing inner races. **If it is not, center it using the rear wheel axle and repeat Steps 9 - 11 to fully seat the bearing against spacer.**
13. Install snap ring. Be sure it is *fully* seated in groove.

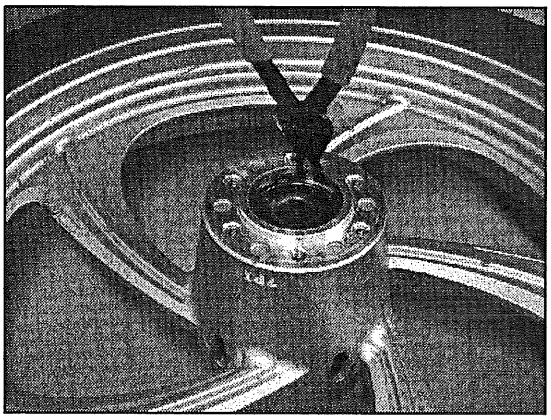

14. Rotate inner races of bearings to check for free, smooth rotation.
15. Install new seals using a 52 mm seal driver.

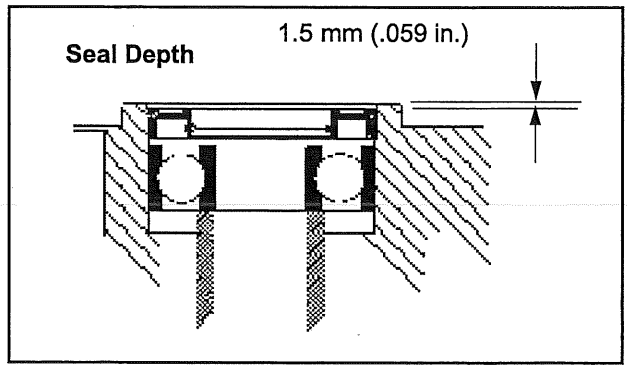

16. Install brake disc (Brake Disc Installation, page 13.15). Clean discs with Victory Disc Brake Cleaner.

CAUTION
Do not allow brake cleaner to contact painted surfaces.

⚠ WARNING
Grease or oil on the brake disc or pads will increase stopping distance which could cause a loss of control or a crash.

17. Install rear sprocket (Rear Sprocket Installation, page 13.16).

BRAKE DISC REMOVAL

NOTE

Brake disc is installed together with ABS tone ring. ABS tone ring is secured using 3 of 6 brake disc bolts. Refer to Brake Disc Inspection (Front & Rear), page 15.29 for disc inspection.

1. Remove rear wheel (Rear Wheel Removal, page 13.9).
2. Position wheel with brake disc facing up. Support wheel so as not to damage the belt sprocket.

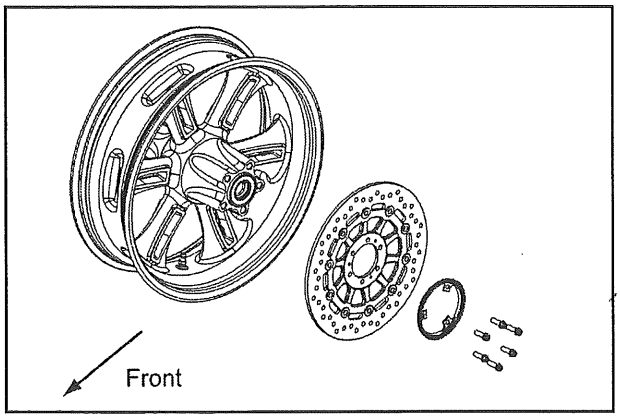

3. Remove 3 screws securing ABS tone ring and discard.
4. Remove and discard remaining brake disc screws.
5. Remove brake disc from wheel.

BRAKE DISC INSTALLATION

1. Clean screw hole threads with Loctite Primer N.
2. Clean surface of wheel and brake disc with Victory Brake Cleaner.
3. Install disc on wheel with part number facing OUT.
4. Move ABS tone ring into position for installation.
5. Replace screws with new screws which have pre-applied locking agent.
6. Evenly torque brake disc retaining bolts to specification.

TORQUE

Brake Disc Mounting Bolts:
22 ft-lbs (30 Nm)

⚠ WARNING

Do not re-install brake disc screws. Use only *new* screws which have a pre-applied locking agent.

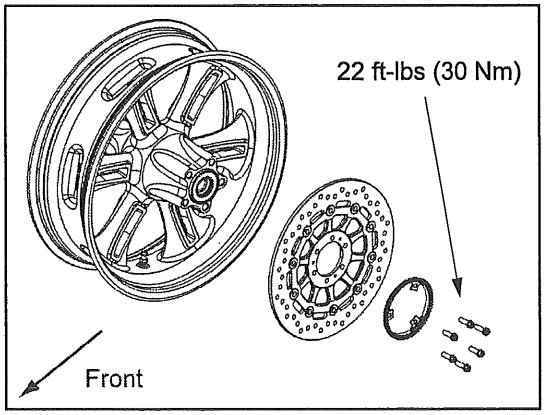

7. Install rear wheel (Rear Wheel Installation, page 13.16).

REAR SPROCKET REMOVAL

1. Securely support rear of motorcycle off floor.
2. Remove rear wheel (Rear Wheel Removal, page 13.9).
3. Remove sprocket bolts.
4. Remove rear sprocket from wheel.

REAR SPROCKET INSTALLATION

1. Clean bolt threads in hub to remove all grease or oil residue.
2. Clean mating surfaces of wheel and sprocket.
3. Tighten nuts in a star pattern to specified torque.
4. Install sprocket and new sprocket bolts.
5. Torque bolts in a star pattern to specified torque.
6. Install rear wheel (Rear Wheel Installation, page 13.16).

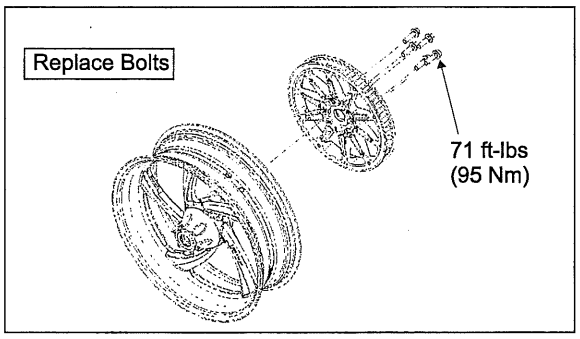

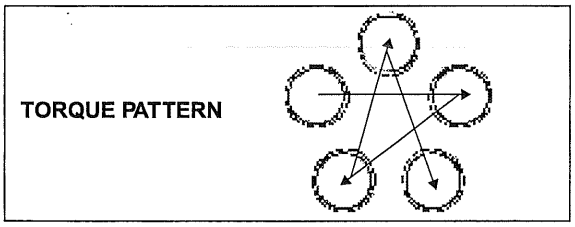

REAR WHEEL INSTALLATION

1. Place rear wheel into position underneath the wheel well.
2. Install the rear wheel spacers in their correct locations. Long spacer on sprocket side and short spacer on disc side of wheel.
3. Verify that the rear sprocket is aligned into the belt guard and install the drive belt. Verify the teeth are engaged completely on both the front and rear sprockets.
4. Prepare the caliper for installation by slightly spreading the brake pads. Place the caliper into position on the brake disc. Verify caliper bracket tab (A) inserts into the slot on the left inside of swingarm once you start to lower it into position.

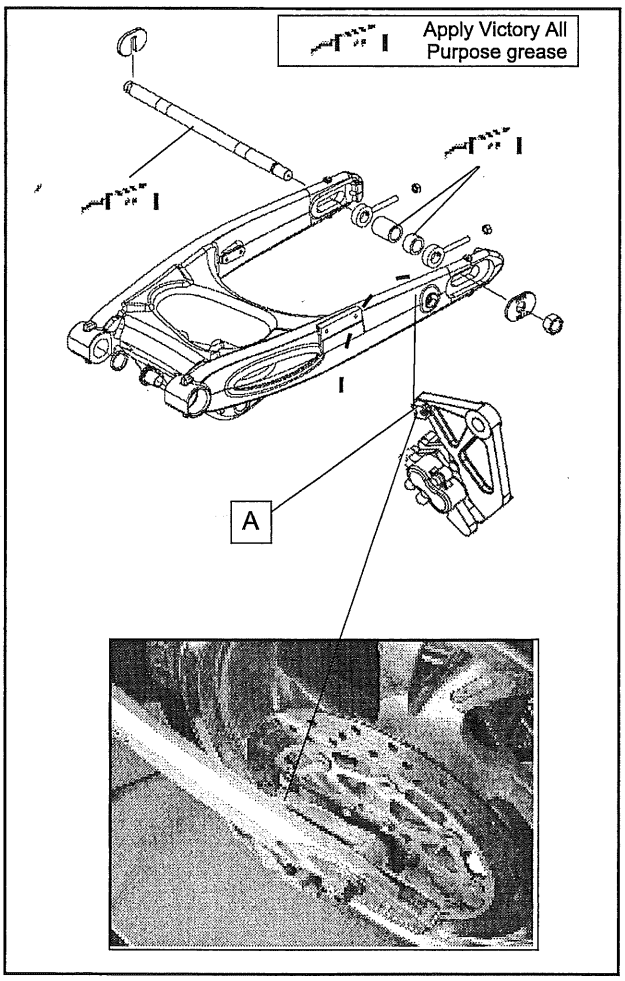

5. Using the platform jack, lower the swingarm over the wheel assembly while guiding the brake caliper, belt adjusters and wheel spacers into alignment.

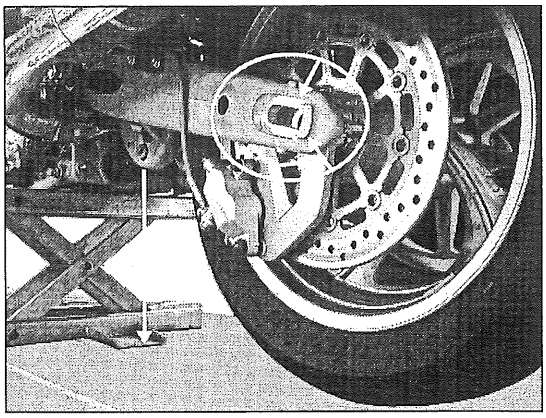

6. Apply a thin film of grease to axle surface.
7. Insert axle through right side swingarm and axle adjuster, right spacer, and into wheel. Push axle through entire wheel assembly, left wheel spacer, left axle adjuster, caliper carrier and swingarm leaving enough room to slide axle retaining plate into groove on right end of axle. (wheel alignment marks on plate facing OUT).
8. Tap or pull axle toward left side until plate is engaged in swingarm. Install washer and axle nut on left side of axle (if removed).

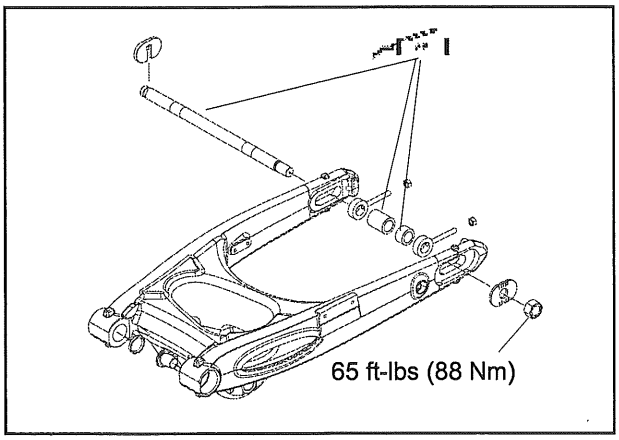

9. Verify the tab of caliper bracket is still engaged in slot on left side of swingarm.
10. Tighten axle nut until seated and back off one full turn. Tap axle forward on each side to be sure adjuster nuts are seated against swingarm. Torque axle nut to specification.

TORQUE
Rear Axle Nut: **65 ft-lb (88 Nm)**

11. Inspect lower shock mount spherical bearing and spacers. Inspect lower pushrod bushing. Replace worn parts using bushing / bearing tool PV-49060.
12. Lower the motorcycle with the platform jack until the shock eyelet (arrow) is aligned with the spherical bearing in the swingarm. Install spacers on each side of spherical bearing. Align parts and install bolt with nut on the inside. Torque nut to specification.

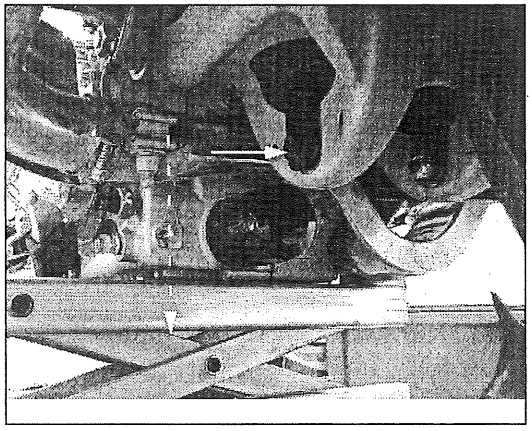

TORQUE
Swingarm Bearing Fasteners: **60 ft-lb (81 Nm)**

13. Continue to lower the motorcycle with the platform jack until the lower shock pushrod eyelet is aligned with the swingarm. Install bolt with nut on the inside. Torque the nut to specification.

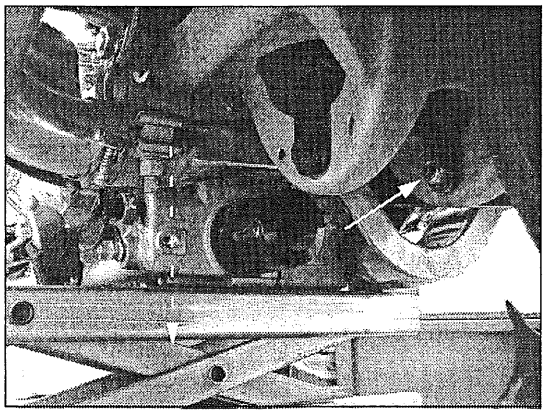

TORQUE
Swingarm Pushrod Fasteners: **60 ft-lb (81 Nm)**

14. Adjust belt tension and wheel alignment (see Drive Belt Tension - Inspection, page 2.26).
15. Apply rear brake pedal 2-3 times to re-set brake pads. firmly against the disc. You should feel firm resistance when applying pressure to the brake pedal. If pedal feels spongy, verify proper assembly of rear wheel and caliper bracket. I correctly assembled, bleed brake system. (see Brake Fluid Replacement & Bleeding Precautions, page 15.20).
16. Rotate the rear wheel and check for smooth rotation without brake drag. If drag is evident, verify brake pedal clearance is within specified 1-2mm range.
17. Inspect wheel speed sensor air gap and adjust if necessary.
18. Lower the motorcycle and test drive to ensure proper operation.

REAR SHOCK

REAR SHOCK SERVICE DATA

The rear shock is not serviceable. Use dry compressed air or Victory Air Pump and Gauge (2876654 or PV-48909) to pressurize the shock. Set ride height by performing air pressure adjustment (see Chapter 2).
Do not store the shock horizontally. If left horizontal for a period of time, cycle shock at least 10 times in upright position before installation.

DO NOT EXCEED 72 PSI operating pressure.

DO NOT EXCEED 110 PSI when filling.

AIR SUSPENSION ADJUSTMENT				
Set desired pressure with bike unloaded on side stand			7180408	
Total Cargo & Occupant Weight (lbs)	Air Pressure (psi)-MAX 72 PSI			
	No Trunk	Trunk	ABS-Tour	Low
100	0	0	0	26
125	0	0	0	30
150	0	0	9	35
175	0	9	15	38
200	0	15	25	42
225	9	25	29	46
250	15	29	34	49
275	25	34	39	52
300	29	39	45	57
325	34	45	52	63
350	39	52	58	65
375	45	58	65	68
400	52	65	70	72
425	58	70	72	
450	65	72	72	
475	70	72	72	
500	72	72	72	

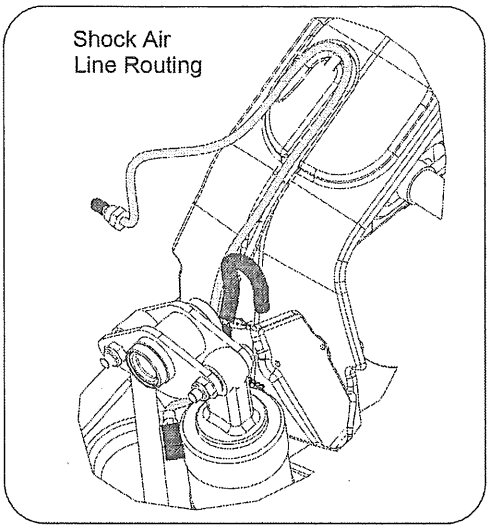

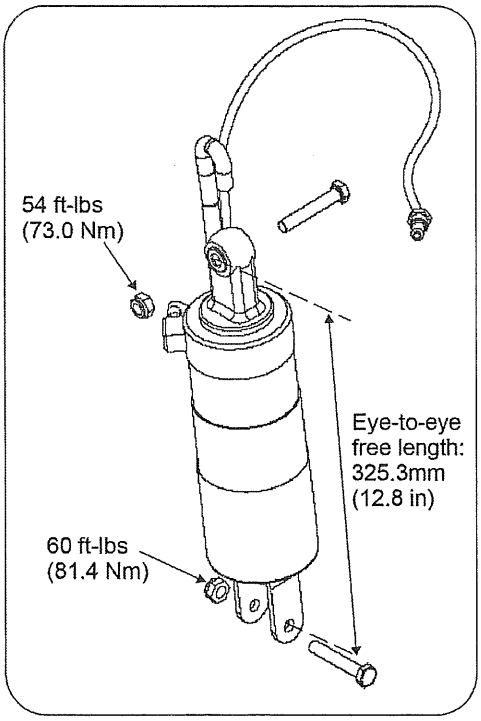

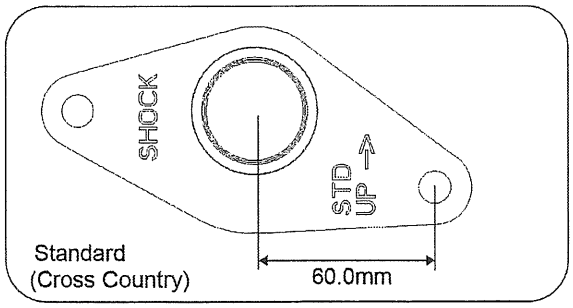

Low (Magnum)

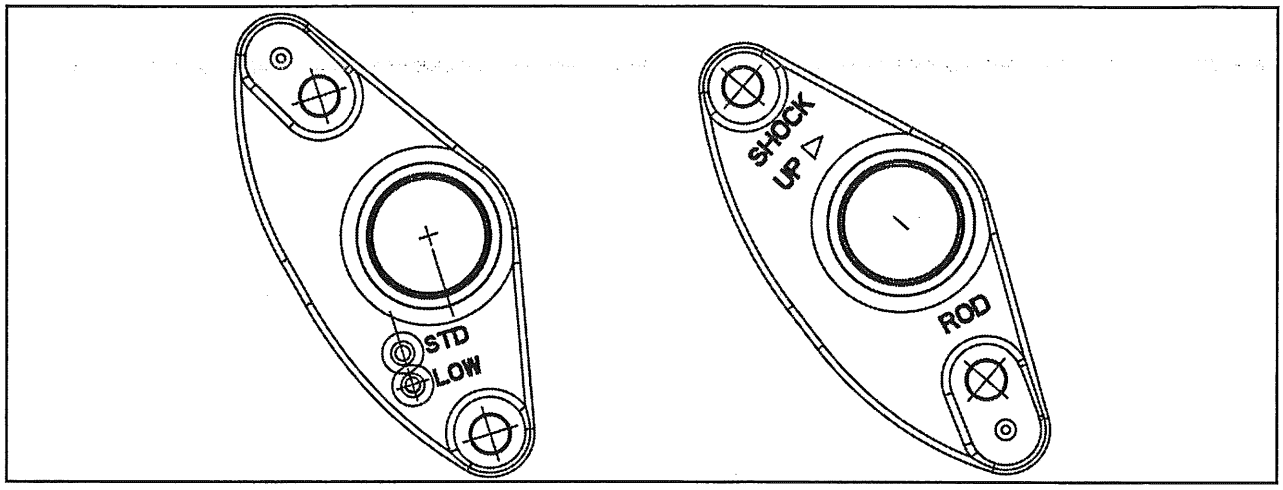

REAR SHOCK REMOVAL

⚠ WARNING

Shock absorber removal involves supporting the machine with the rear end elevated. Take precautions so that the motorcycle is securely supported while the rear tire is off the ground. Severe personal injury or death can occur if the motorcycle tips or falls.

1. Secure the front tire in the wheel vise of a motorcycle table lift and stabilize with tie-downs.
2. Remove seat (Seat, page 3.27), both side covers (Side Cover Removal, page 3.27), and both saddlebags (Saddlebag, Removal / Installation (Unbolted), page 3.28).
3. Place a wide-based platform jack under rear of engine. Elevate the jack slightly until weight is removed from rear wheel, but tire still contacts the table surface. Ensure that the jack is not touching parts other than the engine case.

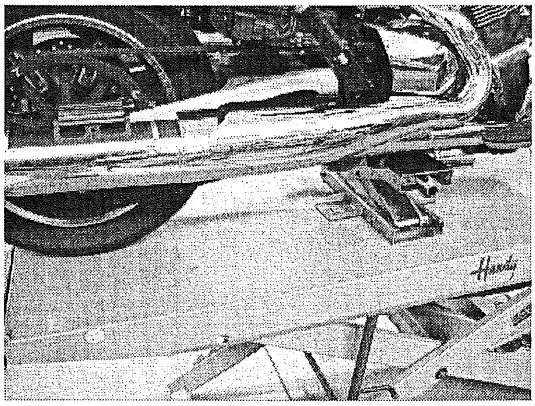

4. Remove lower shock and push-rod bolts (A) from swingarm.

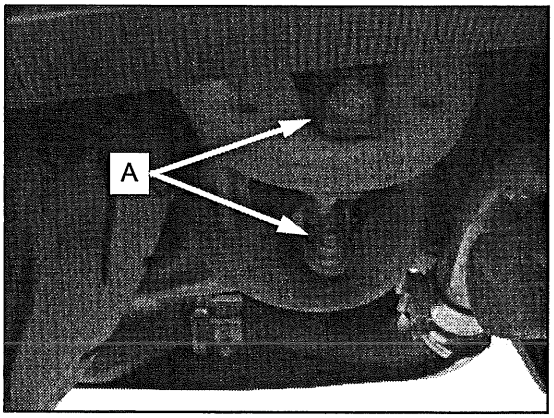

TIP

Lift the swing arm to make removing the fastener easier.

5. Pinch the inner rear fender (B) near the bottom and lower it and detach shock air line and vent hose from plastic clips.

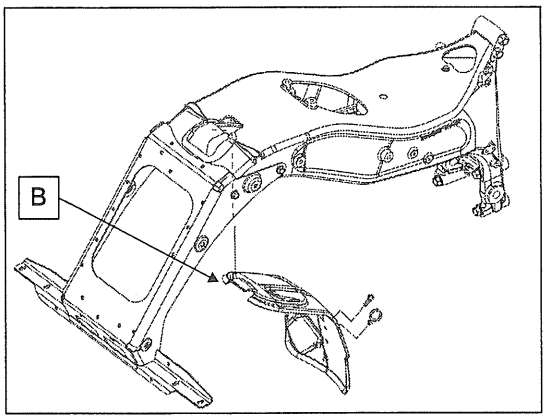

6. Disconnect purge valve lines (C), purge valve connector (D), flasher harness (E) and detach fuse box (F) from right subpanel. Rotate clips to the fuel tank side of the purge valve to release them.

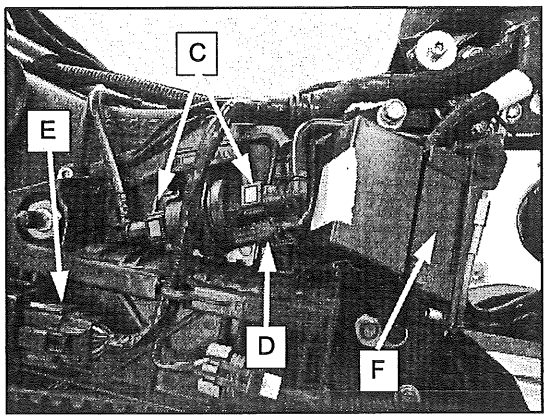

7. Remove jam nut (G) securing air valve to subpanel and cut tie strap (H). Withdraw air valve from subpanel.

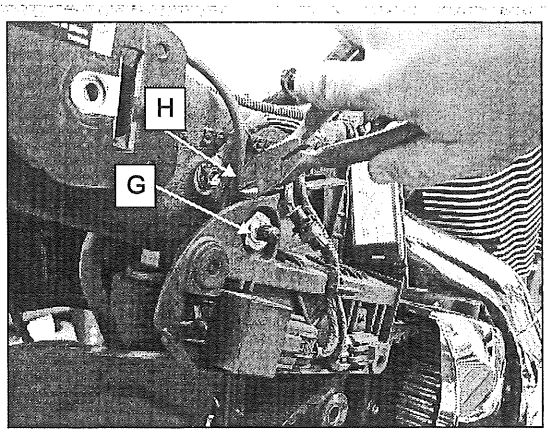

8. Remove subpanel.
9. Remove the rear rocker shaft stop bolt (I).

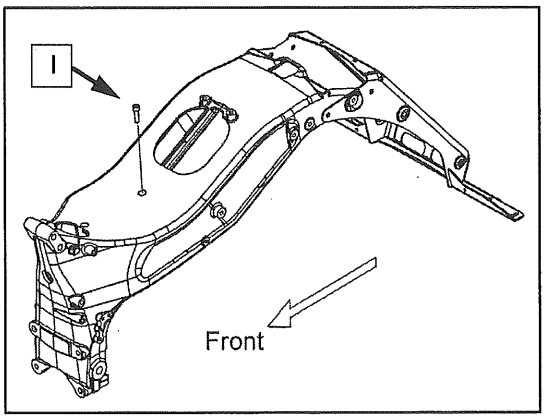

10. Using platform jack, raise frame to provide enough room to access upper push-rod and shock bolts.

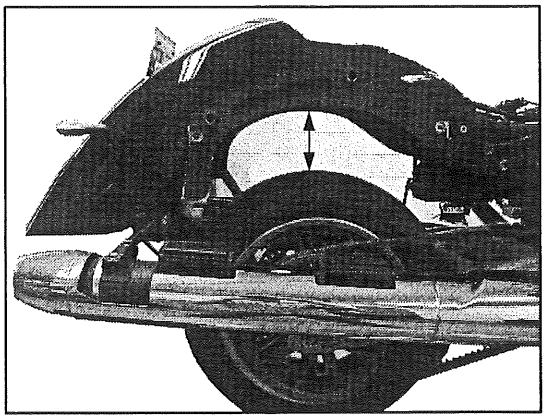

11. Remove rocker shaft and lower the shock assembly through the hole in swingarm far enough to access upper shock bolt.

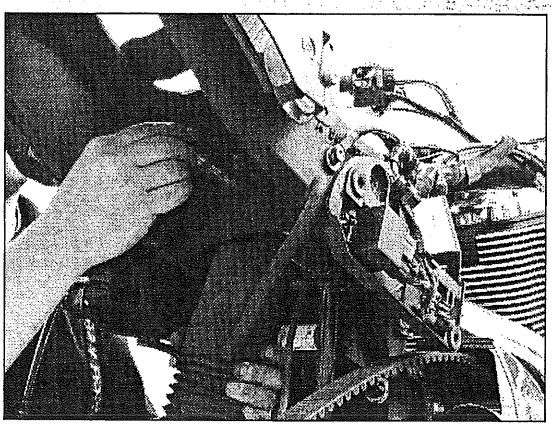

12. Remove push rod bolt from rocker assembly.
13. Remove fasteners and remove rocker assembly.

REAR SHOCK AND ROCKER INSPECTION

⚠ WARNING

The rear shock absorber is air pressurized and is not rebuildable. **DO NOT** attempt to disassemble or service the shock.

1. Inspect shock for signs of oil seepage around the shock body. If leakage is suspected replace the shock absorber assembly.
2. Inspect eyelets (A) for cracks or damage. Replace shock if either eyelet is cracked.

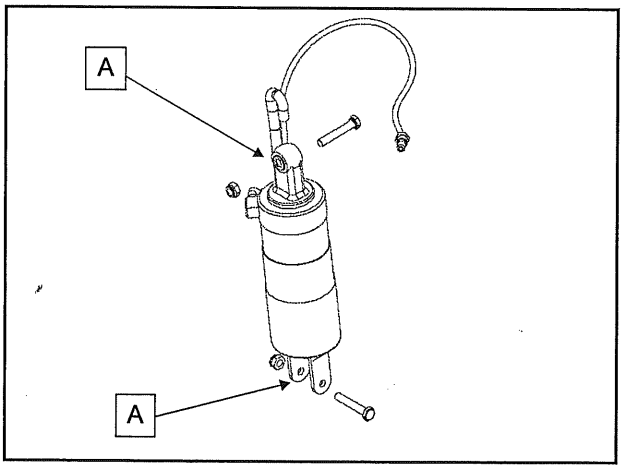

3. Clean shock thoroughly.
4. Inspect for corrosion, pitting, or damage. Replace shock if any of the above is evident.
5. Depressurize the shock.
6. With shock upright, cycle through entire travel range. Shock should move smoothly with consistent damping through the entire travel range, and return to the fully extended position when released. Replace shock assembly if damping is inconsistent, oil leakage has occurred, or if the damper rod does not fully extend when released.
7. Inspect shock spring for cracks or coil distortion. Measure free length and compare to specification.

8. Inspect pivot mechanism and shaft. Bearing needles should turn freely and be free of corrosion or contamination. Thrust bearings should be free of cracks or wear. Inspect surface of shaft for roughness, galling or uneven surface. Replace rocker and shaft as an assembly if either is worn or rough.

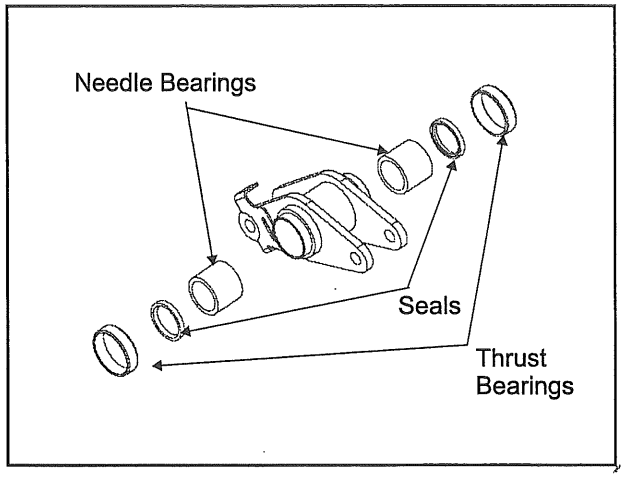

9. Assemble shock, rocker arm, and push-rod assembly. Torque fasteners to specification. See Swingarm & Suspension, page 13.5.

TORQUE
Shock & Push-rod To Rocker Arm: **Upper: 54 ft-lbs (73 Nm)** **Lower: 60 ft-lb (81 Nm)**

10. Inspect lower push-rod spherical bearing and spacers.

11. Inspect spherical bearings (B) and spacers (C) for wear. Replace worn parts before installing shock and push-rod. Use PV-49060 to remove and install bearings. Follow instructions provided with tool. Replacement can be performed with swingarm installed.

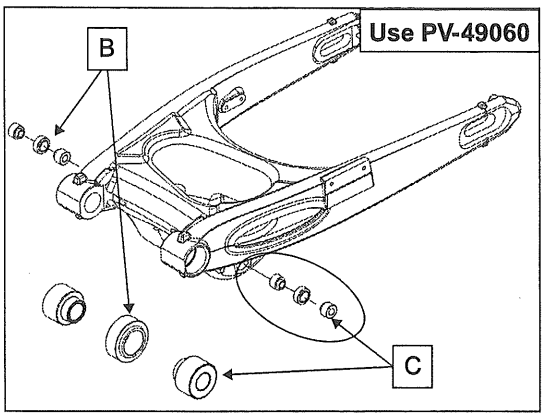

NOTE
A slide hammer puller can be used to remove spherical bearings. Installation requires PV-49060.

SHOCK ABSORBER INSTALLATION

1. Grease rocker shaft and needle bearings with Victory All Purpose Grease (2872187).
2. Install shock and rocker arm in by sliding the shock down into the space between the swing arm shock mount and rocker arm mount.
3. Lift the top of the shock into the rear frame near the rocker arm pivot. Slide clevis end of the shock over the shock mount on the swing arm.
4. Install the push rod onto the rocker assembly. Torque to specification.
5. Install fastener on the lower shock mount and torque to specification.
6. Install shaft on rocker assembly.

NOTE
Make sure to grease the shaft.

7. Lower the motorcycle slowly with the platform jack making sure the lower shock and push-rod bolt holes line up properly with the swingarm.

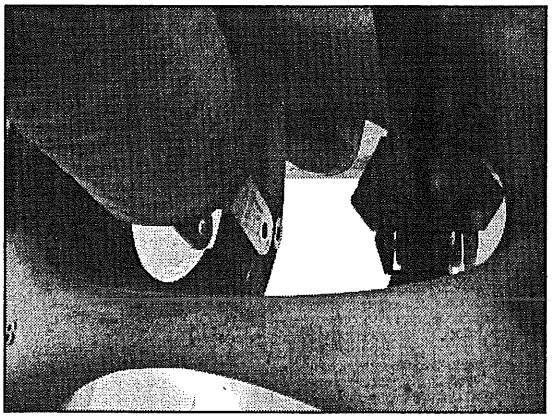

8. Install lower push-rod and shock bolts and torque to specification.

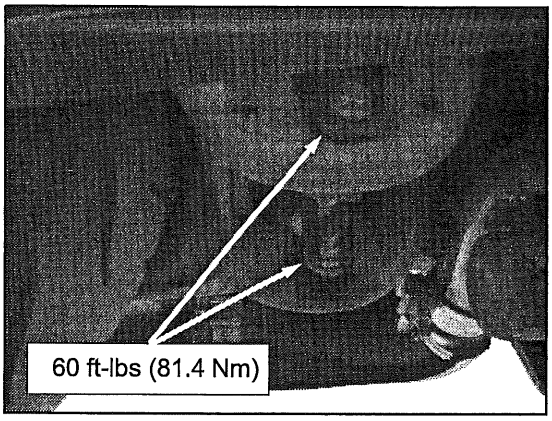

9. Secure air line and vent hose in clips (A) of inner rear fender (debris flap).

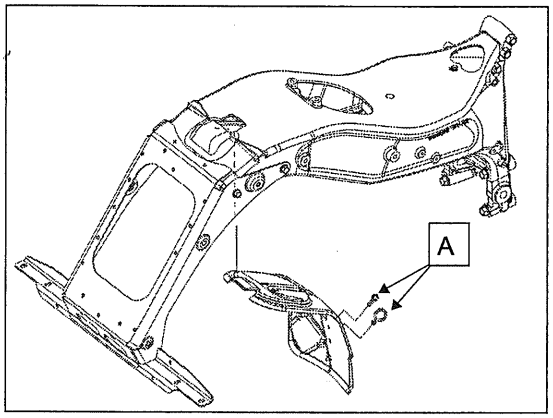

10. Route air line in fender channel and secure the loop (B) in the upper detent.

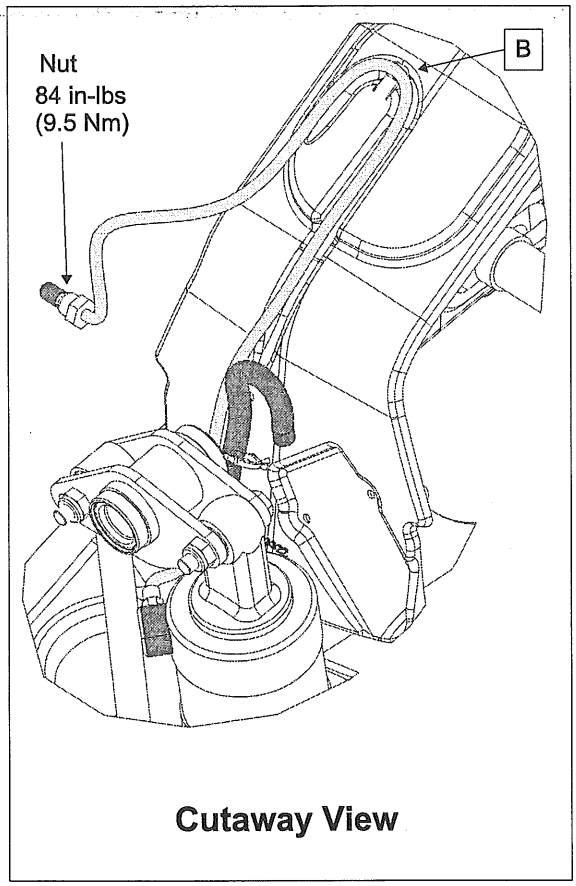

11. Lift debris flap into position and engage top tab (C) in slot (D) of frame.

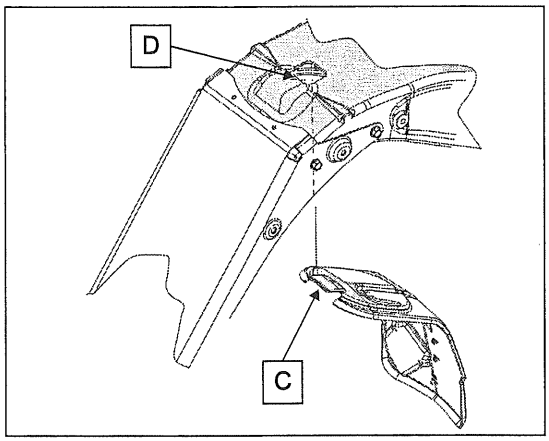

12. Route air line fitting between fender and frame on right side.
13. Lift bottom edge of inner fender up and push it forward until corner tabs (E) are engaged with notches in the frame. Do not push lower tabs past the frame notches. Be sure the top tab is still properly engaged on top of rear frame opening.

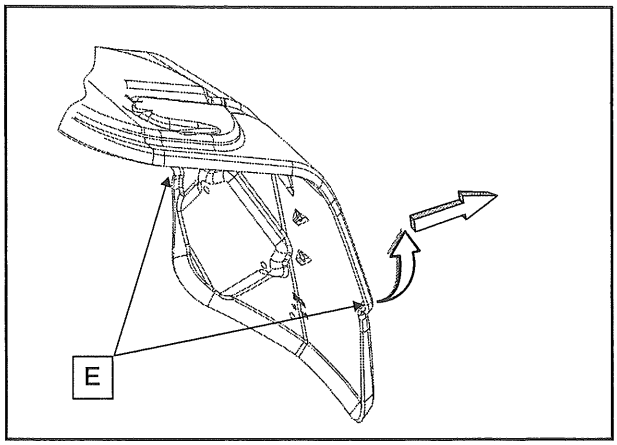

14. Install subpanel and reconnect purge valve lines, purge valve connector, flasher harness and fuse box.
15. Route the air line fitting through the hole in the right sub-panel, install nut and torque to specification.

TORQUE
Air Line Fitting Nut: **84 in-lb (10 Nm)**

16. Install seat (Seat, page 3.27), side covers (Side Cover Removal, page 3.27) and saddlebags (Saddlebag, Removal / Installation (Unbolted), page 3.28).
17. Bounce test suspension to check for proper operation before test ride.

SWINGARM SERVICE

SWING ARM REMOVAL

⚠ WARNING

Swingarm removal involves supporting the machine with the rear end elevated. Take precautions so that the motorcycle is securely supported while the rear tire is off the ground. Severe personal injury or death can occur if the motorcycle tips or falls.

1. Secure front tire in the wheel vise of a motorcycle table lift.
2. Remove seat, both side covers, and both saddlebags (Chapter 3).
3. Place a wide-based platform jack under rear of engine. Elevate the jack slightly until weight is removed from rear wheel.

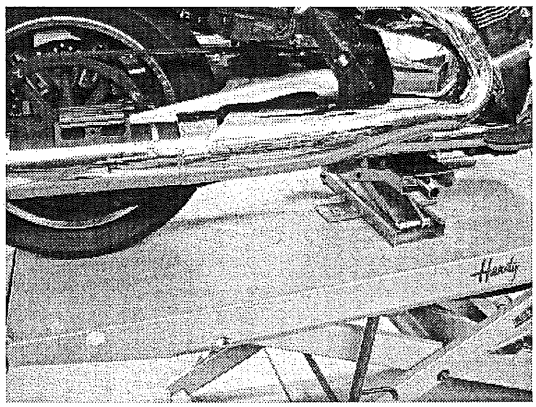

4. Loosen left muffler crossover pipe clamp and left muffler with shields attached.
5. Remove left passenger footrest bracket and remove brake line guide from swingarm.
6. Remove right muffler shield (A) and right muffler.
7. Remove rear wheel (Rear Wheel Removal, page 13.9).
8. *Loosen* front exhaust head pipe flange nuts (B) and remove rear head pipe flange nuts.
9. Remove lower head pipe fasteners (C) and loosen clamp (D).

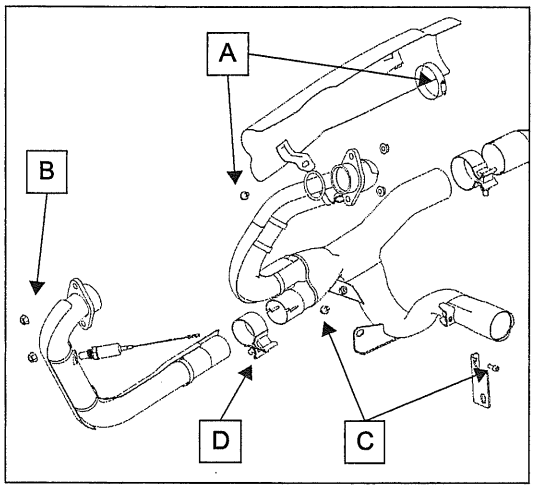

10. Remove right passenger footrest bracket fasteners (E).

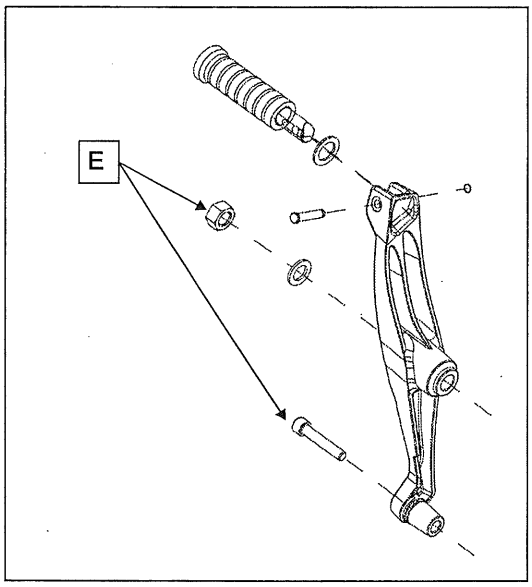

11. Loosen right (driver) footrest mounting bolts to gain clearance at head pipes.

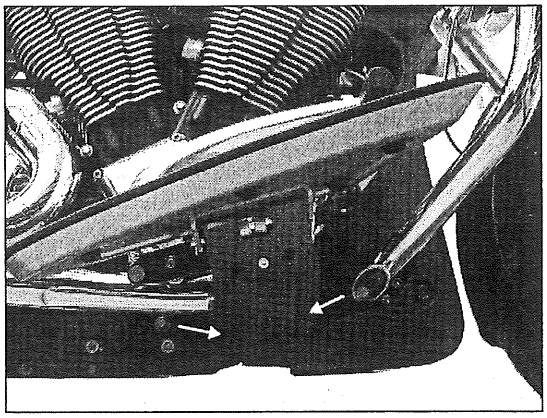

12. Pull head pipe outward and slide passenger footrest bracket off swingarm pivot shaft.
13. Remove swingarm pivot shaft nut and washer (F).

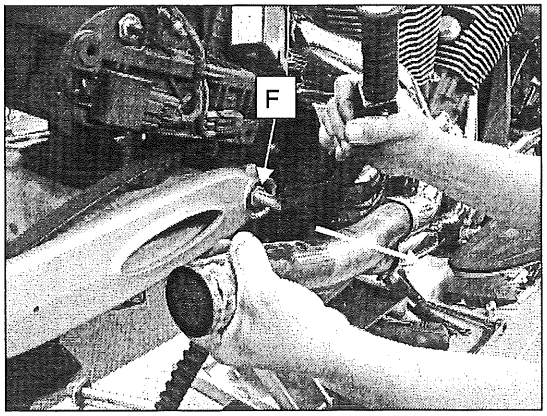

14. Push swingarm shaft out from right to left.
15. Remove swingarm.

SWING ARM BUSHINGS / BEARING REPLACEMENT

1. Remove sleeve (A) from right side of swingarm.
2. Remove seals (B) and bearing (C) from right side of swingarm.

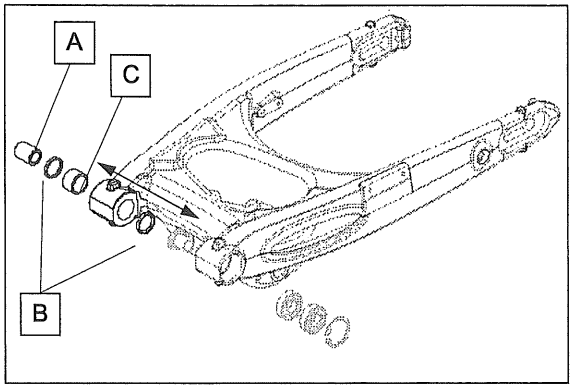

3. Remove bushing (D) from left side of swingarm.

CAUTION
Do not reuse bearings that have been removed.

4. Remove snap ring (E) and drive bearings (F) out from inside to outside.

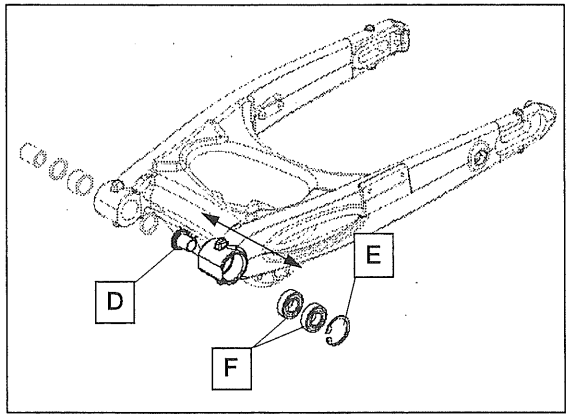

5. Support the inside left edge of the swingarm pivot on a pressing surface.

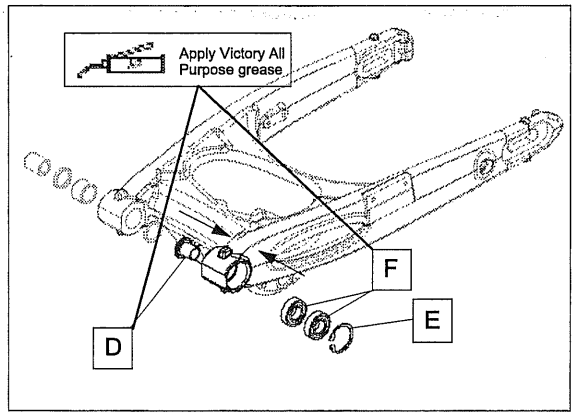

6. Grease outside surface of new bearings (F) and press into bore until seated, using a 41.5mm drive adaptor or a suitable arbor. Press on the OUTER RACE only.
7. Install snap ring (E) and be sure it is seated properly in groove.
8. Install bushing (D) into left side of swingarm. Left side bearings are pre-lubricated. Do not apply grease to this bushing.
9. Support inside right edge of swingarm.
10. Grease surface of a new bearing (C) and press into bore until centered. Use a 31.5mm drive adaptor or a suitable arbor.
11. Apply grease to inner lip of seals (B) and install seals flush with outside of swingarm.

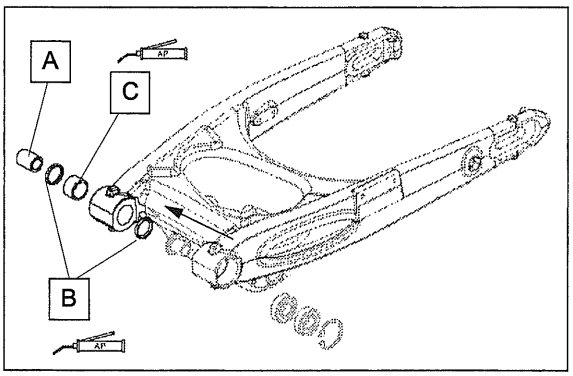

12. Grease right side bearing sleeve (A) and install with a twisting motion until centered in the seals and bearing.

SWING ARM INSTALLATION

1. Clean inside of pivot shaft bore in frame (A).

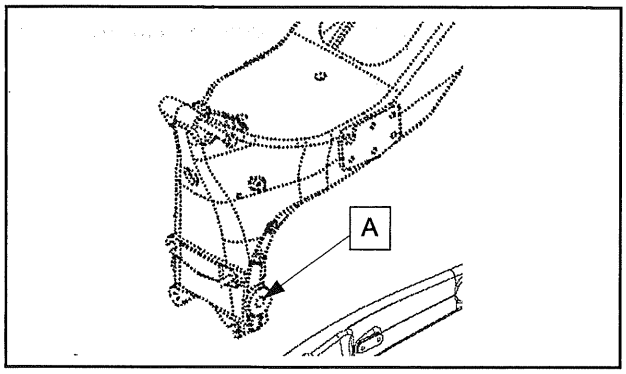

2. Grease swingarm pivot shaft (B).
3. Apply Loctite 262 (Red) to threads on left end of shaft and install left side nut (C) until outer surface is even with end of shaft.
4. Install washer (D) onto shaft.
5. Place swingarm assembly with bearings, seals, and bushings installed into position on frame.
6. Install pivot shaft from left to right. Be sure right-hand sleeve (E) is in place and does not get pushed out of swingarm when shaft is installed.
7. Install right side washer (F) and nut (G) hand tight.

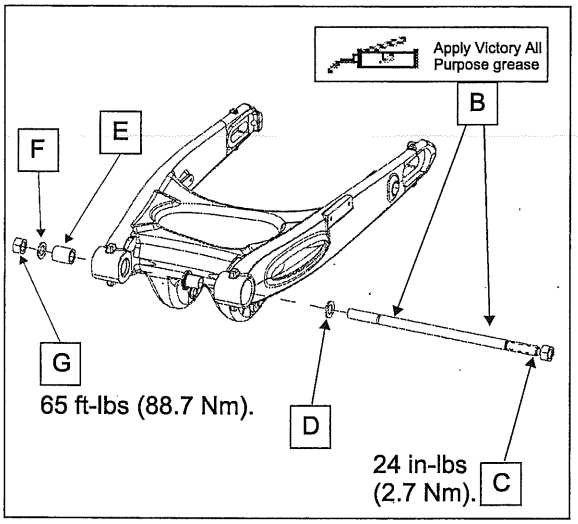

8. Torque LEFT side nut to specification.

TORQUE
Swingarm LEFT Side Pivot Nut: **24 in-lb (3 Nm)**

9. Torque RIGHT side nut to specification.

TORQUE
Swingarm RIGHT Side Pivot Nut: **65 ft-lb (89 Nm)**

10. Move swingarm through travel range to be sure it pivots smoothly and freely.
11. Replace rear brake line clamp to left side of swingarm and torque screw to specification.

TORQUE
Brake Line Clamp: **8 ft-lb (11 Nm)**

12. Install shock and pushrod to swingarm. Install bolts from outside to inside and install nuts. Torque nut side of fastener to specification.

TORQUE
Shock Nut (to Swingarm): **54 ft-lb (73 Nm)**

13. Install rear wheel assembly (Rear Wheel Installation, page 13.16).
14. Raise rear of motorcycle again and check to make sure that the following applies:

- The rear wheel turns freely, without any interference between the belt guard, the tire, and the swingarm.
- Brake line is properly routed and secured.
- The left and right axle adjusters are aligned properly (wheel is in alignment).
- The rear brake functions properly. It is critical that the peg on the caliper mount rides inside the channel in the swingarm. If brake pedal does not feel firm refer to Brake Fluid Replacement & Bleeding Precautions, page 15.20 for brake inspection and bleeding procedure.
- All fasteners have been tightened correctly.
- There is adequate clearance between swingarm and exhaust mufflers and mounting.
- The swingarm is not loose, it doesn't wobble from side to side, and it doesn't move up and down when pushed and pulled firmly.

15. Test ride motorcycle to be sure rear suspension operates smoothly without binding or abnormal noises.
16. Adjust air pressure for rider weight and load (see Rear Suspension Air Pressure Adjustment, page 2.35).

⚠ CAUTION
DO NOT EXCEED 72 PSI operating pressure.

TROUBLESHOOTING

PROBLEM	POSSIBLE CAUSE	REPAIR RECOMMENDED
Rear Wheel Feels "Loose" or Wobbles	Low tire pressure	Inflate to specification
	Worn or damaged wheel bearings	Replace wheel bearings
	Worn or damaged swing arm, rocker, pushrod, or shock bushings/bearings.	Replace bushings or bearings
	Damaged or incorrect rear tire	Replace rear tire
	Unbalanced rear wheel assembly	Balance tire/wheel
	Distorted (bent) rear wheel	Replace wheel
	Loose swing arm, axle or suspension fasteners.	Torque to specifications
Rear Suspension Too Hard	Bent / corroded shock damper rod	Replace shock
	Dry, seized, damaged, corroded suspension bushing(s) / bearing(s)	Correct as necessary
	Incorrect preload adjustment	Adjust to rider & load
	Damaged, dry, or corroded swingarm, rocker, pushrod, or shock bushings, bearings, or shaft	Lubricate or Replace
	High tire pressure	Deflate to specification
	Drive belt adjustment too tight	Adjust drive belt tension
Rear Suspension Too Soft	Shock leaking air / oil	Replace shock / repair line leak
	Weak shock spring	Replace shock spring
	Incorrect air pressure adjustment	Adjust to rider & load
	Excessive load placed on motorcycle	Educate rider / operator
	Low tire pressure	Inflate to specification
Rear Suspension Noisy	Loose fasteners	Torque to specifications
	Worn wheel bearings	Replace
	Worn swing arm, rocker arm, pushrod, or strut bushing / bearings	Replace
	Damaged shock absorber	Replace as necessary
	Contact between moving and stationary parts	Check all swingarm, wheel, and brake system components for contact with frame, exhaust, body, etc. Check routing and the all fasteners are in place and tight
Rear Wheel Drag (Turns Hard)	Incorrect drive belt adjustment	Adjust drive belt tension
	Tire contact with object or chassis	Determine point of contact and correct
	Bent rear axle	Replace
	Damaged wheel bearings	Replace
	Brake problem	Refer to Brake System Troubleshooting, page 15.43

CHAPTER 14
TIRES

GENERAL / SAFETY 14.2
WARNINGS / PRECAUTIONS 14.2
TIRE PRESSURE / LOADING 14.2
WHEEL SPECIFICATIONS 14.2
SPECIAL TOOLS 14.2
TIRE INSPECTION 14.3
TIRE WEAR PATTERNS & GENERAL CAUSES 14.3
OZONE CRACKING 14.3
FRONT TIRE CUPPING 14.3
TIRE REPLACEMENT 14.4
GENERAL 14.4
TIRE REMOVAL (TYPICAL) 14.4
TIRE MOUNTING 14.6
TIRE BALANCING 14.8
WHEEL INSPECTION 14.10
VISUAL INSPECTION & RUNOUT 14.10
TIRE REPAIR PRECAUTIONS 14.10
VALVE STEM 14.11
TIRE VALVE AND STEM INSPECTION 14.11
VALVE STEM INSTALLATION - RUBBER 14.11
VALVE STEM INSTALLATION - METAL 14.11
SPOKED WHEEL OFFSET MEASUREMENT AND ADJUSTMENT 14.13
SPOKED WHEEL OFFSET ADJUSTMENT 14.13
WHEEL TRUING 14.14
FINAL TIGHTENING 14.15
SPOKE MAINTENANCE 14.16
WHEEL LACING 14.16
MAINTENANCE - CHECK WHEEL SPOKES 14.17
TROUBLESHOOTING 14.18
TROUBLESHOOTING TIRES 14.18

GENERAL / SAFETY

WARNINGS / PRECAUTIONS

⚠ WARNING

If a consumer wishes to replace the Original Equipment Manufacturer (OEM) tires with another brand of tire, Victory recommends contacting the tech-line department of the tire manufacturer being considered to ensure compatibility. Victory makes no other recommendation other than the OEM tires. Tires other than OEM may or may not adversely affect the handling characteristics of the motorcycle or may not have adequate clearance between tire and various parts of the motorcycle.

⚠ WARNING

Victory motorcycles are produced using the designated tires listed as original equipment. This includes field testing to ensure stability and superior handling. The use of tires other than original equipment may cause instability which can lead to a crash resulting in serious injury or death. Use *only* the recommended tires inflated to the recommended tire pressures.

Operating the motorcycle with damaged rims creates a safety hazard including air pressure loss, steering imbalance and/or reduced steering control. Do not attempt to repair or straighten damaged rims.

The use of tire valves and valve cores other than original equipment replacement Victory parts could cause tire deflation during driving. Always use genuine Victory parts or their equivalent. Be certain to install the valve stem caps securely. Do not allow the motorcycle to be ridden without properly installed valve stem caps.

⚠ WARNING

Do not attempt to repair tires that have:

- Punctures greater than 6mm (0.240") diameter.
- Cuts with a length of greater than 6mm (0.240").
- Any punctures or cuts on the sidewall of the tire.
- Front Tire tread depth of less than 1.6mm (.063").
- Rear Tire tread depth of less than 1.6mm (.063").
- Ply / Tread separation
- Severe tread cupping.
- Cuts / gouges on the bead sealing surface.
- Flat spots on the tread.
- Bubbles, separation or any unusual damage to the inner liner of the tire.
- Chemical sealants or balance additives added.

⚠ WARNING

All repairs must be made from inside the tire. Victory recommends the use of head-type plugs such as: Tech *Tire Repair*™ Uni-Seals. Complete Tech *Tire Repair*™ kits are commonly available at most automotive parts outlets.

⚠ WARNING

No form of temporary repair should ever be attempted. Secondary damage caused by a penetrating object may not be detected and tire or tube deflation may occur at a later date.

⚠ WARNING

It is dangerous to ride with a worn tire. When a tire reaches the minimum tread depth listed below, replace the tire immediately.

FRONT TIRE MINIMUM TREAD DEPTH	REAR TIRE MINIMUM TREAD DEPTH
1.6 mm (1/16")	1.6 mm (1/16")

CAUTION

Two of the biggest factors contributing to premature tire wear are overloading and under-inflation. Do not deviate from the specifications for loading or inflation.

TIRE PRESSURE / LOADING

Refer toTire Pressure, page 2.11 or to the decal on the motorcycle for tire pressure and loading information.

WHEEL SPECIFICATIONS

Refer to Chapter 12 (Front Wheel and Suspension) or Chapter 13 (Rear Wheel and Suspension) for wheel specifications.

SPECIAL TOOLS

SPECIAL TOOL	PART NUMBER
Rim Protectors	PV-43536
Tire Irons (for manual tire changing)	Commercially available

TIRE INSPECTION

TIRE WEAR PATTERNS & GENERAL CAUSES

SYMPTOM	CAUSE
Wear on Left Side	Riding on Crowned Roads
Edges Worn	Underinflation or Excessive Loads
Excess Wear in the Middle of Tire	Over-inflation or Tire Abuse
Cracks in Tread Grooves	Underinflation, Excessive Loads, Suspension Bottoming
Tread Block Cupping (Usually Front Tire -See Below)	Normal Braking Wear

OZONE CRACKING

Ozone cracking usually shows up on the sidewalls of tires and is caused by sunlight, electric motor emissions, smog, or other environmental factors. Ozone cracking does not pose a problem unless the cracks reach the cords. If this occurs, moisture may penetrate the carcass of the tire causing cord separation. Tires showing signs of severe ozone cracking (cords visible at the bottom of the cracks) must be replaced.

FRONT TIRE CUPPING

Front of tread block worn more than rear of tread block:

- The cupping of front tires is somewhat normal.
- Rear tires are subjected to forces in both directions. The forces of braking and acceleration result in even tire wear.
- Front tires are subjected only to the forces of braking. When the brakes are applied, tire deflection is increased and wear occurs in only one direction.
- Incorrect tire pressure is the number one cause of excessive tire cupping. Too little tire pressure causes the tire to over-deflect which increases the amount of scrubbing and causes more tire cupping.
- Binding or improperly assembled front forks can also contribute to excessive tire cupping. If the front forks do not react as they should the tire acts as the sole suspension component and tread deflection increases.

TIRE REPLACEMENT

GENERAL

There are three generally acceptable methods to dismount and mount a tubeless motorcycle tire from its rim. For each of the three methods, there are countless variations.

The three general methods are:

- Pneumatic or electrically operated tire machine
- Manually operated tire machine
- Manual manipulation of tire irons

The seal between the tire and rim is one of the most critical factors that contribute to the safe operation of the wheel/tire assembly. Victory permits and recommends all three of the general methods, but realizes that careless or improper work habits can damage both the tire and rim no matter which method is used. With any of the methods, care must still be taken to avoid damaging the rim., tire, inner tube, brake disc or sprocket.

The pneumatic or electrically operated tire machine is preferred because it is the most efficient method to dismount and mount tires.

The manually operated tire machine method is the next preferred method. It can be just as efficient as a power assisted tire machine but with some of the machines it may be necessary to remove the belt driven sprocket in order to gain sufficient clearance for tire removal.

Manual manipulation is the least preferred method since it will generally not deliver the same efficiency as the other methods and greater care needs to be taken when performed. Care must be taken when using tire irons to not damage or stress the tire bead. Also, the opposite bead needs to be in drop center of the wheel during mounting and dismounting of the tire.

The following method describes the procedure using manually manipulated tire irons. Other than the actual operation of various tools, the general concept is the same regardless of which method is used.

The following procedure shows the front tire being removed from its rim. Other than the possibility of interference of the sprocket, the procedure is the same for the rear tire.

NOTE

Rear sprocket bolts and brake rotor bolts have a pre-applied locking agent and bolts should either be replaced or a locking agent applied upon assembly. Refer to Rear Sprocket Removal, page 11.10 for rear sprocket removal and installation. Refer to Brake Disc Removal, page 12.27 for rear brake disc removal and installation. Brake rotor bolts should not be re-used.

TIRE REMOVAL (TYPICAL)

1. Remove wheel / tire assembly from motorcycle (front refer to Front Wheel Removal, page 12.26, rear refer to Rear Wheel Removal, page 13.9).

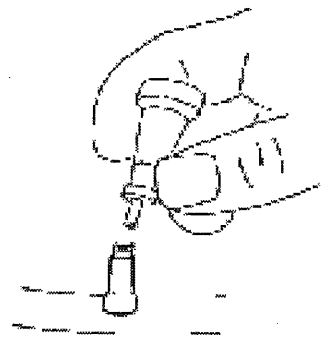

Fig. 1

2. Remove valve core from valve stem and let all air escape. (Fig. 1)

CAUTION

If the tires have a directional arrow it must be observed and the tire installed correctly.

3. Mount the wheel assembly into a tire bead breaker and break the bead. (Fig. 2)

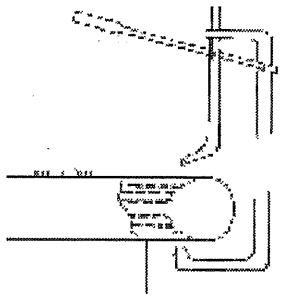

Fig. 2

4. Flip the wheel assembly over and break the bead on the other side.

IMPORTANT

Take great care not to bend or otherwise damage the brake disc and/or belt driven sprocket. If the bead breaker being used interferes with either the brake disk and/or belt driven sprocket, remove the disc or sprocket as required.

NOTE

This procedure can be performed on an empty drum or similar fixture. The top lip of the drum should be covered with protective material or split hose to protect the rim. (Fig. 3)

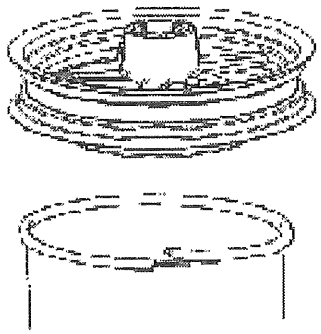

Fig. 3

5. Position wheel assembly so brake disc will not be damaged and rim will not be scratched.
6. Push tire down and lubricate tire bead with tire lubricant on both sides of tire. (Fig. 4)

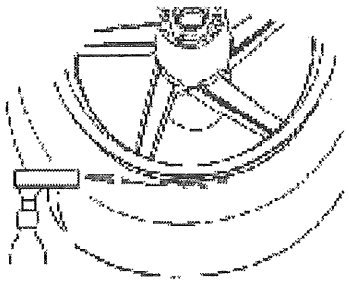

Fig. 4

7. Install rim protectors at 12:00 and 2:00 positions. (Fig. 5)

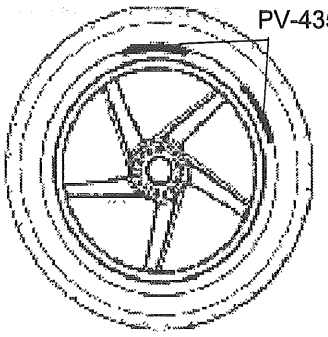

Fig. 5

Rim protectors PV-43536

8. Stand opposite of rim protectors. Use your knee to push tire bead down into the rim's drop center at location (Fig. 6, A) while pulling bottom bead up into drop center. Beads must be kept in drop center during following steps.
9. With both beads in the drop center, slide a tire iron between tire bead and 12 o'clock rim protector (Fig. 6, B), lift the bead up with the tire iron, and hold.

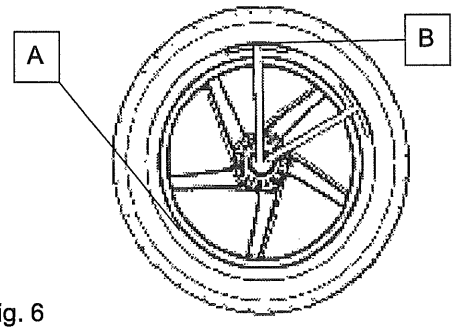

Fig. 6

10. Using another tire iron to lift the bead at the 2 o'clock position.
11. Remove the 2 o'clock tire iron and slide rim protector to the 4 o'clock position, and lever the bead up.

NOTE

The top and bottom tire beads that are opposite the area being worked with the tire irons must continually be pushed into the drop center of the wheel, or bead removal will be difficult and tire could be damaged.

12. Continue going around the tire in small steps, until one side of the tire is off the rim.

13. Turn the tire and wheel assembly over on the drum, so the removed bead is on the bottom side.

TUBE TYPE TIRES:
Remove valve stem nut, push stem through rim.
Remove tube and inspect tube carefully for signs of abrasion or other damage.
Replace tube and rim band whenever a tire is removed

14. Push the tire away from you so the remaining bead is in the drop center of the rim.
15. Lubricate the bead and start it over the rim with a tire iron.
16. In most cases the tire can be forced off of the rim by hand. Continue to work around the tire until the tire is completely dismounted.

TIRE MOUNTING

1. Lubricate both tire beads with rubber lubricant. (Fig. 11)

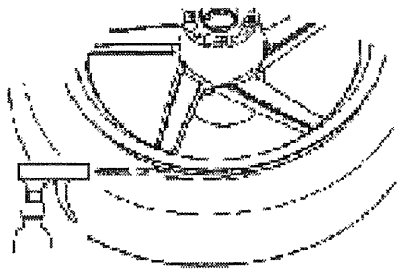

Fig. 11

⚠ WARNING

Never apply grease, oil, gasoline, spray type lubricants or anything other than rubber lubricant or a neutral soap and water solution to the tire bead. Doing so can damage the tire.

Balance Dots

Dunlop tires have a yellow dot on the sidewall which corresponds to the lightest part of the tire. This dot is meant to line-up with the tire valve which often is the heaviest part of the rim (although this is not always the case).

⚠ WARNING

Victory does not recommend the use of liquid balancer/ sealers. These are a form of temporary repair which may adversely affect ply material and mask secondary damage caused by the penetrating object. Reliance upon sealants can result in sudden tire failure and accident.

Directional Arrows

If tires have directional arrows, they must be observed and tires installed correctly. When tires are manufactured, tread rubber is laid down as a strip and its ends connect as overlapping joints. When the tire is mounted correctly the scrubbing forces of acceleration (rear) or braking (front) press the lap joints together rather than try to separate the joint.

The wheel assemblies must be free of foreign debris that would affect balancing.

Carefully inspect the wheel bearings, seals and axle for damage or corrosion.

Ensure that bead is correctly seated.

TUBE TYPE TIRES:
Install new rim band (rim flap) on rim with hole oriented over valve stem hole in rim.

2. Place tire on drum.

CAUTION

Support tire assembly in such a way that brake disk or belt drive sprocket will not be damaged.

3. Lubricate the bead.
4. Orient tire correctly as to the balance dot and directional arrow.
5. Push tire on to rim until one bead is installed. It shouldn't be necessary to use tire irons to put one side of the tire onto the rim. Remember to keep bead (s) in the drop center of the wheel whenever possible.

6. Turn the tire / wheel over on the drum so the un-installed portion of tire is facing up.

NOTE

Confirm tire is positioned correctly by observing directional arrows. (Fig. 12)

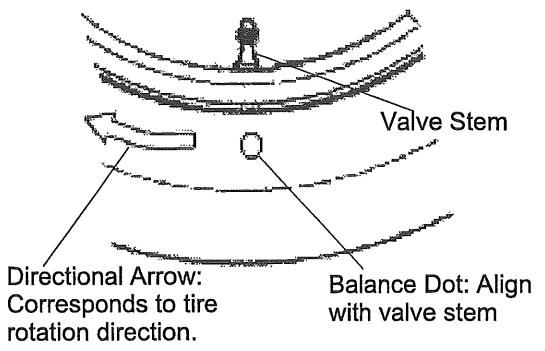

Fig. 12

7. For tube type tires, also observe the following:

Tube Type Tires:

Apply baby powder to new (deflated) tube and install by inserting valve stem through the rim band and rim.

Install and turn the valve stem lock nut a few threads, but do not tighten at this time.

Install the tube in the tire starting at the valve stem and working around until the entire tube is laying inside the tire in a natural position.

Arrange the tube, if necessary, to remove kinks or bends, making sure that the valve stem projects straight out and forms a 90 degree angle with the rim.

Tighten the lock nut by hand to hold the stem in position.

CAUTION

Make sure your tire irons are smooth and free of scratches or any sharp edges. Polish them if necessary. Do not slide the tire iron in any more than is necessary. When installing tube type tires, avoid lifting the tire iron past vertical to minimize the chance of pinching the tube.

8. Lubricate the tire bead.

9. With your hands, push as much of the remaining tire bead as possible into the rim, pinching both upper and lower beads into the drop center.

10. When no more of tire can be installed by hand, press down on portion of tire in front of you with your knee to keep the top bead in the drop center.

11. Carefully slide a tire iron between the rim and tire at the other side of the un-installed portion of the tire.

NOTE

Be sure both beads are forced as far as possible into the drop center of the rim.

12. Lever the tire iron over and install that portion of tire. Continue to move tire iron in small increments until tire is completely installed.

13. Install valve core if it was removed.

14. Line up balance dot.

15. Confirm that the directional arrows are pointing in the correct direction.

16. Bounce tire on the floor several times while rotating tire. This will expand tire bead outward slightly which will make tire inflation easier. (Fig. 13)

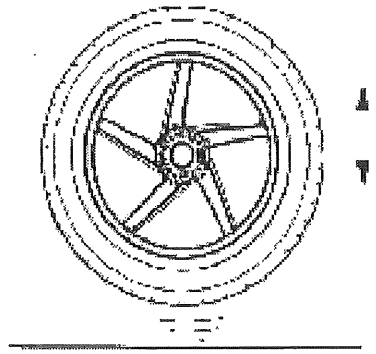

Fig. 13

17. Inflate tire observing the precautions listed below and on Tire Repair Precautions, page 14.10.

Tire Inflation & Precautions

- Wear approved eye protection.
- Lubricate the tire beads with a tire mounting lubricant before inflation.
- Before inflating a tube type tire, check to be sure valve stem is still straight. If not, rotate tire slightly on rim (in the direction the stem is pointing) to align (Fig. 14).

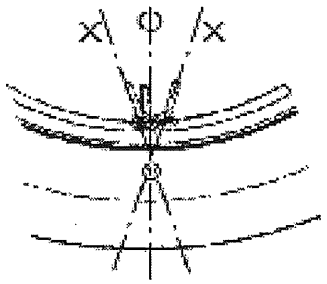

Valve Stem Alignment (Tube Tires)
Fig. 14

- Lock assembly on mounting machine or place in safety cage before inflating to seat beads.
- Use extension gauge and hose with slip-on air chuck.
- Stand back with no part of your body within the perimeter of the assembled tire and rim.
- Inflate with core in valve stem.
- Never inflate above 42 psi to seat beads.

18. Inspect the line molded onto the tire side walls. It must be the same distance from the rim all the way around the tire. If the distance varies it indicates that tire is not seated properly. (Fig. 15)

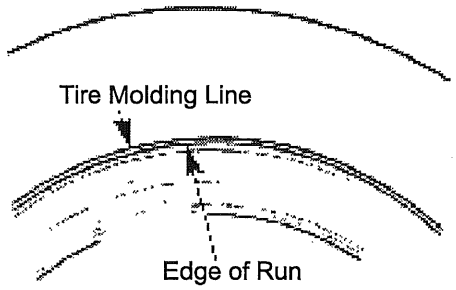

Fig. 15

19. If tire is not seated correctly, deflate and unseat the tire, relubricate the tire beads and repeat inflation procedure.
20. Install wheel assembly onto balance stand and spin. Observe the wheel assembly while it is spinning to make sure the tire is seated properly.
21. Adjust tire pressures to specifications.
22. Balance tire / wheel assembly. Refer to Tire Balancing, page 14.8.

⚠ WARNING

FOR REPAIRED TIRES: Speed should not exceed 50 MPH for the first 24 hours after repair and repaired tire should never be used over 80 MPH. Inspect inflation pressure after tire cools for at least three hours following run-in.**FOR NEW TIRES**: Replacement of OEM tires or replacement with differently constructed tires will not immediately produce improved reactions the same as the original tires when new. When new tires are installed, they should not be subjected to maximum power or hard cornering until a reasonable "scrub" period of approximately 100 miles has been covered. This will permit the rider to become accustomed to "feel" of new tires or tire combination, and achieve optimum road grip.Inspect and adjust tire inflation pressure after tire cools down for at least three hours following "run-in".

TIRE BALANCING

⚠ WARNING

It is essential that the wheel assembly be balanced before use and rebalanced each time the tire is removed.

Wheel balance affects stability, handling and overall safety of the motorcycle.

All Dunlop street tires should be installed with the yellow balance dot at the tire valve.

The use of liquid balancer/sealer is not recommended.

This procedure will outline balancing wheel assembly in a gravity balance stand. If a pendulum or spin type balancer is being used, reference the manufacturer's instructions that came with the equipment.

1. Mount wheel assembly in a balance stand.

Typical Balance Stand (Commercially available) (Fig. 16)

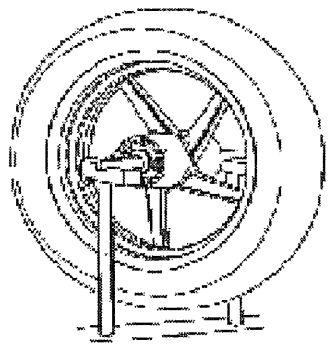

Fig. 16

2. Remove all balance weights. Clean tire and rim thoroughly.

NOTE

While it is possible to balance a wheel assembly with axle and grease-free wheel bearings as the pivot point, it is not recommended. Use an inspection stand that has knife edge bearings and its own axle.

3. Spin the wheel assembly. Allow it to stop on its own and mark the highest (lightest) part of the wheel.
4. Repeat the spinning process to verify the heaviest part of the wheel. (Fig. 17)

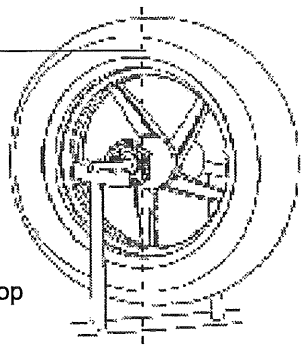

Fig. 17

NOTE

If the bearings are totally free to rotate and the wheel does not stop in the same place each time, the wheel is in balance.

5. Place balance weights at the lightest portion of wheel in small increments. (Fig. 18)

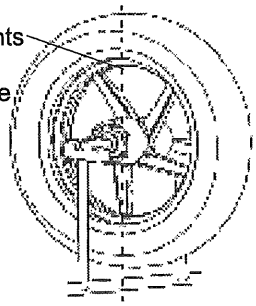

Fig. 18

6. After each addition of weight, spin the wheel assembly and allow it to stop by itself.
7. When correct amount of weight has been added to wheel, it will no longer stop in the same location and the wheel assembly is balanced.
8. Install wheel / tire assembly tire on motorcycle.

   Rear wheel installation: See Rear Wheel Installation, page 13.16.

CAUTION

Do not add more than 85 grams (3.0 oz.) of weight to the rear wheel.Do not add more than 85 grams (3.0 oz.) of weight to the front wheel

If more than the recommended weight is necessary to balance the wheel, dismount the tire and rotate it 90° without regard to the yellow balance dot, and re-balance the wheel / tire.

Adhesive Weight P/N 1520253

WHEEL INSPECTION

VISUAL INSPECTION & RUNOUT

1. Refer toFront Wheel Inspection, page 12.26 for complete front wheel inspection procedures.
2. Refer to Rear Wheel Inspection, page 13.11 for complete rear wheel inspection procedures.
3. Clean the rim of all rubber particles and corrosion.

⚠ WARNING

If any of the following problems are discovered, replace the wheel.

4. Inspect wheel for cracks and/or distortion.
5. Inspect bead seating area of scratches, gouges, distortion or any damage that could create a sealing problem.
6. Inspect wheel for axial runout, measured on the inner bead-sealing surface of wheel as shown in Fig. 7 (B).
7. Measure wheel for radial runout Fig. 7 (A).

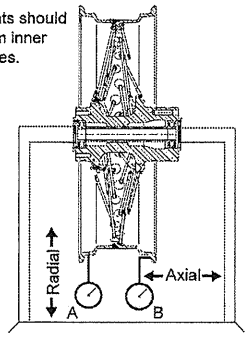

Fig. 7

NOTE

Measure runout on the inside tire bead sealing surface of wheel. Be sure surface is clean before measuring

8. Compare measurements of axial and radial runout to specifications (Specifications, page 12.4 or Specifications - Rear Wheel And Suspension, page 13.3). Replace wheel if any measurement exceeds Service Limit. Cast or Billet wheels cannot be straightened.
9. Clean the sealing surfaces of the rim thoroughly. Use a soft brush (nylon) soap and water if necessary.

⚠ WARNING

Do not scratch or damage sealing surfaces of rim. Loss of air pressure can cause a loss of control and an accident, resulting in serious injury or death.

TIRE REPAIR PRECAUTIONS

⚠ WARNING

Only permanent plug-patch repairs of small tread area punctures from **inside** the unmounted tire are recommended. Never perform an exterior repair and never use an inner tube as a substitute for a proper repair. Speed should not exceed 50 MPH for the first 24 hours after repair and the repaired tire should never be used over 80 MPH. Inspect inflation pressure after the tire cools for at least three hours following initial operation.

VALVE STEM

TIRE VALVE AND STEM INSPECTION

1. Remove and inspect valve core (Fig. 8). Replace if seal is worn, deformed or otherwise damaged. Inspect tire valve for cracks or visible damage and replace if necessary.

NOTE
Valve stem replacement is recommended when tire is being replaced.

VALVE STEM INSTALLATION - RUBBER

1. Remove tire from wheel and cut valve stem with a diagonal cutter to remove.
2. Clean tire valve hole and sealing area thoroughly.
3. Lubricate tire valve and hole with P-80 rubber lubricant or equivalent.
4. Place tire valve into hole and screw a tire valve installation tool (commercially available) onto valve.
5. Place a small wood block (B) against the rim to improve leverage point and keep the pulling angle as straight as possible. (Fig. 9)
6. Pull the valve (A) until fully seated and remove tool.

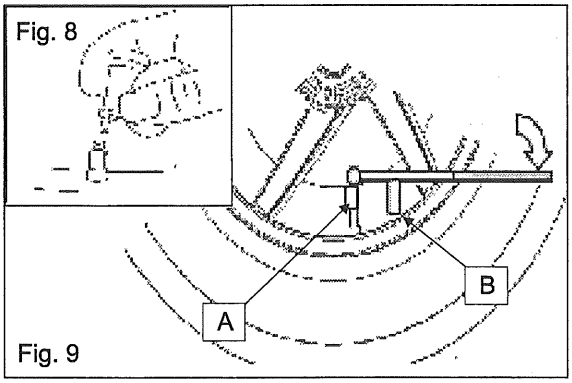

VALVE STEM INSTALLATION - METAL

1. Remove tire from wheel and remove old stem.
2. Clean gasket or O-ring seal surface of wheel.
3. Place tire valve (with seal washer or O-ring installed) through hole in rim and secure it hand tight with nut.
4. Refer to Fig. 10. On Type 2 valve stems (with no holding slot) tighten upper nut (A) to stem cap (B).
5. Hold nut (A) to prevent valve stem rotation, and torque lower stem nut (C) to specification using an open end torque wrench.

TORQUE
Lower Stem Nut: **12 in-lbs (1.35 Nm)**

6. Release upper nut from cap and screw it down against stem nut.

7. Hold stem nut and tighten nut to specification.

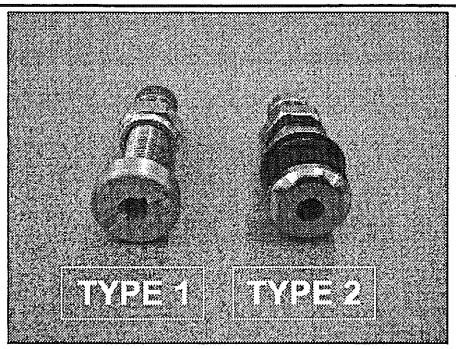

TYPE 1 (HOLDING SLOT)

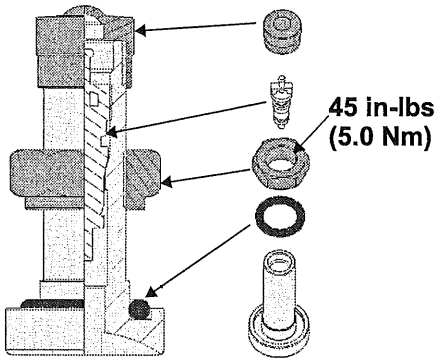

TYPE 2 (NO HOLDING SLOT)

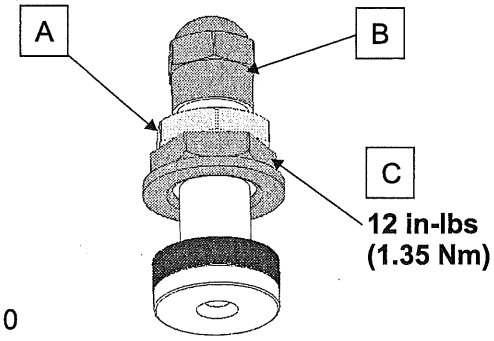

Fig. 10

TORQUE
Stem Nut: **12 in-lbs (1 Nm)**

SPOKED WHEEL OFFSET MEASUREMENT AND ADJUSTMENT

SPOKED WHEEL OFFSET ADJUSTMENT

Front Wheel

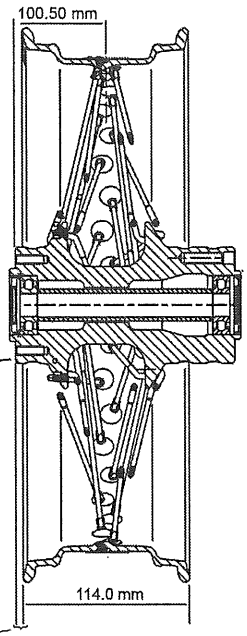

EXAMPLE CALCULATION

Wheel Offset Calculation:

TOTAL WIDTH OF RIM = 114 MM
1/2 WIDTH OF RIM (114 / 2) = 57 MM
OFFSET (CENTER OF HUB) = 100.5 MM

WHEEL OFFSET (100.5 - 57) = 43.5 MM

Rear Wheel

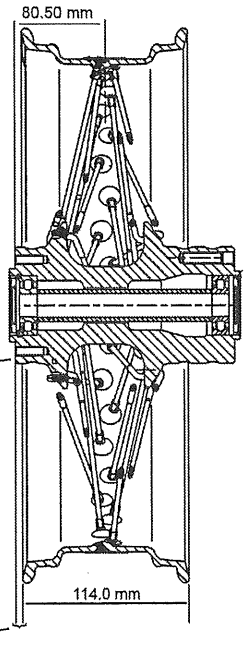

EXAMPLE CALCULATION

Wheel Offset Calculation:

TOTAL WIDTH OF RIM = 114 MM
1/2 WIDTH OF RIM (114 / 2) = 57 MM
OFFSET (CENTER OF HUB) = 80.5

WHEEL OFFSET (80.5 - 57) = 23.5 MM

1. Lay a straight edge on the brake disc mounting surface and measure the offset distance to outermost edge of rim (A).

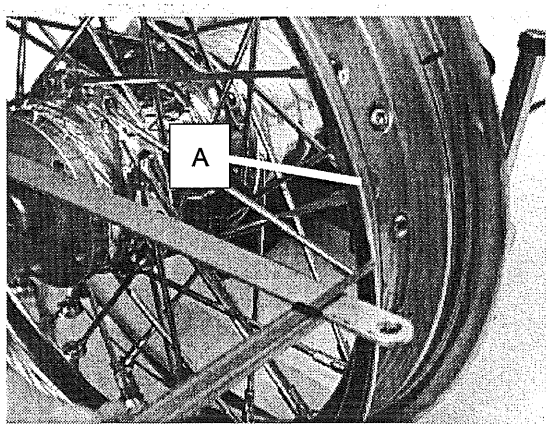

2. If the offset measurement is too large, loosen spokes on the opposite side of the rim and tighten spokes on the measurement side to decrease the wheel offset. Reverse this process to increase wheel offset.
3. Initially tighten spokes in 3 steps to the specified torque while maintaining distance A. This is a starting torque only. Final torque is listed on Final Tightening, page 14.15.

TORQUE
Initial Spoke Torque: **69 in-lbs (8 Nm)**

4. Place straight edge on disc mounting surface and measure to edge of rim. Verify that wheel offset is correct after tightening spokes.

NOTE
All spokes must be loosened or tightened the same amount to maintain minimum axial and radial runout.

WHEEL TRUING

1. Inspect wheel offset as outlined on Spoked Wheel Offset Adjustment, page 14.13 before truing the wheel

2. Measure axial and radial runout.

NOTE

Axial runout is side to side movement (wobble) of the rim. Radial runout is the up and down movement (hop) of the rim.

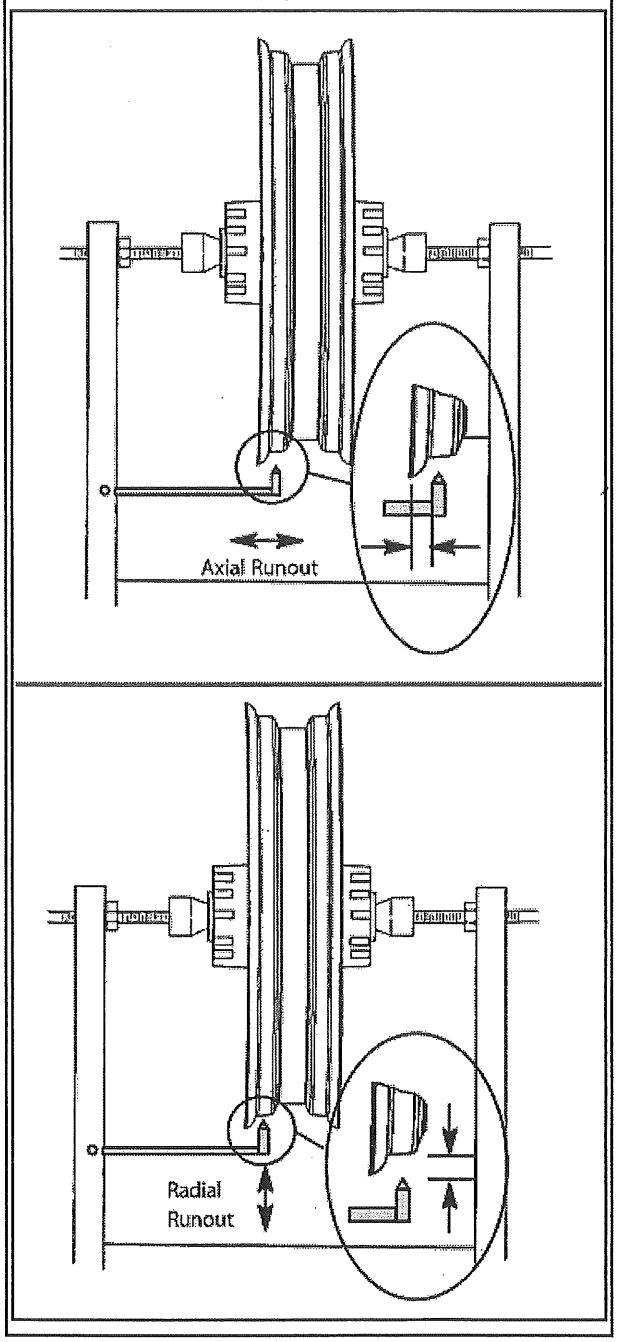

3. First, adjust radial runout by loosening spokes around any high spots, rotate wheel 1/2 turn and tighten spokes directly opposite the high spot.
4. Adjust axial runout.

NOTE

It's important to work slowly and make adjustments in small increments. Alternate between radial and axial adjustments until runout is within specification.

14

FINAL TIGHTENING

1. Using tape, divide wheel into four quadrants to perform final spoke torque sequence. Tighten each spoke equally. **(Tightening Sequence 1,3,2,4)**

TORQUE

Final Spoke Torque:
69 in-lbs (8 Nm)

2. Maintain proper runout adjustment during final tightening of spokes.

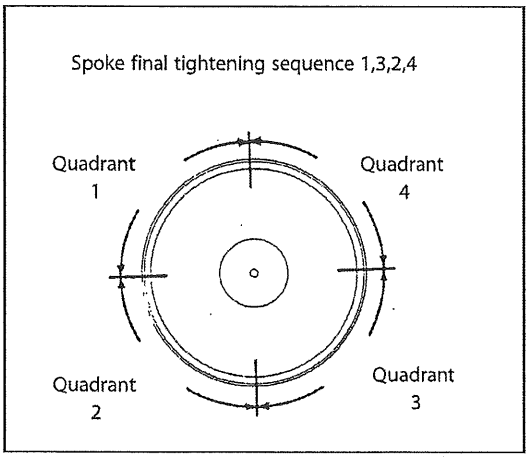

SPOKE MAINTENANCE

WHEEL LACING

NOTE

If an assembled wheel is available it can be referenced for proper spoke pattern.

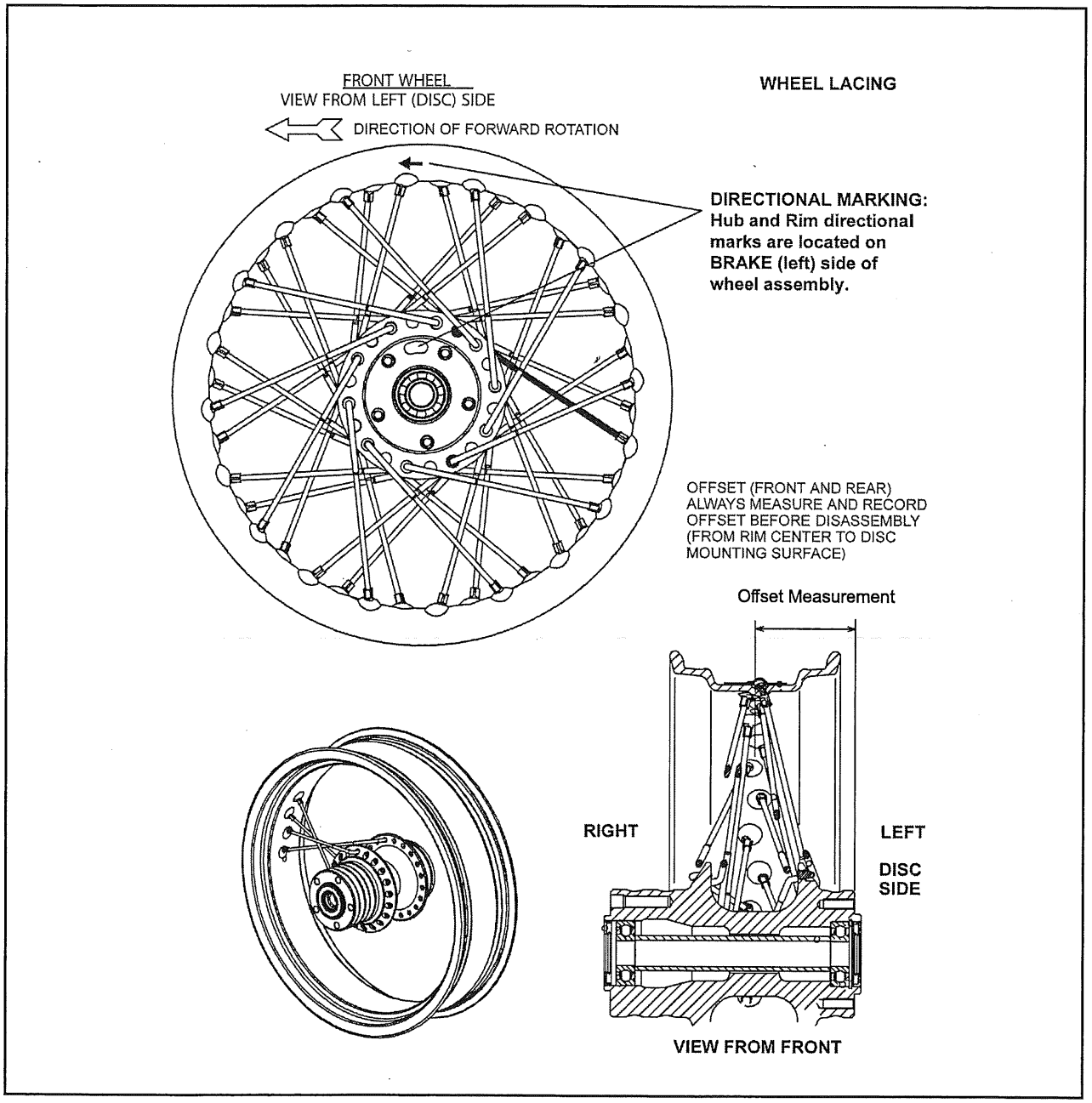

1. Before disassembly, select a "starting spoke" and make index marks at its anchor points on the hub and rim. This will help ensure the spokes are installed and grouped correctly upon assembly.
2. Organize 20 inside spokes and nipples on a clean work surface. Lubricate spoke threads and rim nipple-holes with a light oil.
3. Using the index marks from step one, insert all inside spokes skipping one hole between each.

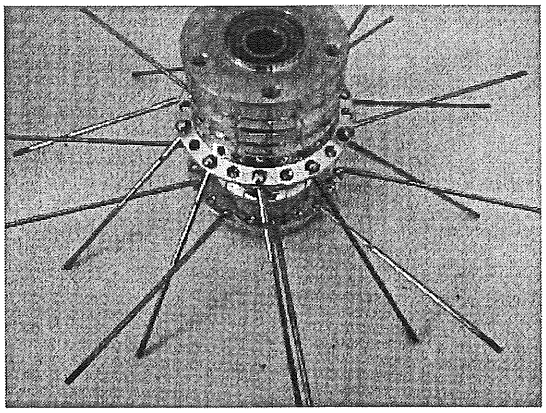

NOTE

Inside spokes are not installed directly across from each other on the different hub flanges. Install inside spokes on the opposite flange one hole to the right or left.

4. Lay rim in position around the hub assembly making sure the valve stem hole and spoke index marks are correctly located.

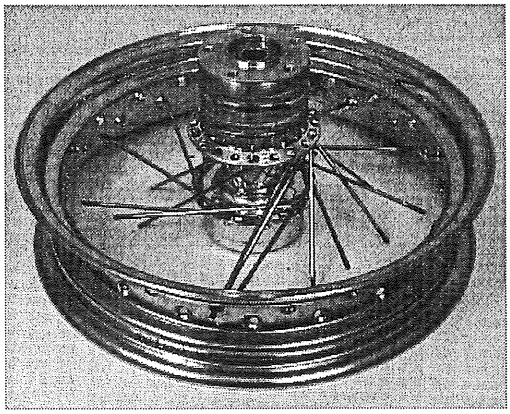

5. Thread the "starting spoke" into the corresponding nipple and continue to thread inside spokes until they are all finger tight.
6. Install outside spokes and screw on nipples. Work your way around the wheel, installing spokes on alternate sides of wheel. Continue until all spokes and nipples are installed. Tighten nipples equally by hand.
7. With all nipples installed, evenly snug all nipples using a spoke wrench. Tighten until one thread shows above each nipple. Work your way around the wheel tightening spokes equally.
8. Place wheel assembly onto a truing stand for rim offset adjustment, final spoke tightening and wheel truing of wheel.

MAINTENANCE - CHECK WHEEL SPOKES

If your motorcycle is equipped with spoked wheels, inspect both wheels for loose, bent, broken or missing spokes. To identify loose spokes, grasp each spoke and try to move it side to side or up and down. All spokes should be equally tight and have the same amount of flex. Tighten loose spokes or replace bent, broken or missing spokes.

Inspect spokes after first 500 miles, then again every 5,000 miles.

TROUBLESHOOTING

TROUBLESHOOTING TIRES

PROBLEM	POSSIBLE CAUSE	REPAIR RECOMMENDED
Rear Wheel (Wobbles)	Bent rim	Replace
	Worn or damaged wheel bearings	Replace as a set
	Worn or damaged swing arm bushings.	Replace as a set
	Damaged or incorrect tire	Replace rear tire
	Wheel assembly out-of-balance	Balance wheel
	Low tire pressure	Inflate to specification
	Loose swing arm, axle or suspension fasteners.	Torque to specification
Handlebars Oscillate (Wobble)	Bent front axle	Replace
	Worn or damaged wheel bearings	Replace as a set
	Tire mounted incorrectly	Inspect and re-mount tire
	Damaged tire	Replace
	Loose steering stem nut	Adjust to specification
	Incorrect tire	Replace
	Incorrect tire pressure	Inflate to specification
Front Wheel Oscillates (Wobbles)	Bent rim	Replace
	Worn or damaged wheel bearings	Replace as a set
	Damaged or incorrect tire	Replace
	Loose axle or axle pinch bolts	Torque to specification
	Right and left fork not installed at same height	Repair
	Fork oil level incorrect	Fill to specification
	Fork spring free length different between right & left	Replace spring that does not meet specification
	Wheel assembly out-of-balance	Balance wheel

CHAPTER 15
BRAKES

GENERAL....15.3
BRAKE SYSTEM SAFETY....15.3
BRAKE SERVICE SPECIAL TOOLS....15.4
GENERAL SPECIFICATIONS....15.4
BRAKE SYSTEM TORQUE SPECIFICATIONS....15.5
ANTI-LOCK BRAKE SYSTEM (ABS)....15.6
ABS SYSTEM SAFETY PRECAUTIONS....15.6
ABS GENERAL INFORMATION....15.6
ABS SYSTEM COMPONENTS....15.7
ABS OVERVIEW OF OPERATION....15.7
ANTI-LOCK BRAKE SYSTEM OVERVIEW....15.8
FRONT BRAKE (ABS)....15.8
REAR BRAKE (ABS)....15.9
MASTER CYLINDERS / ASSEMBLY VIEW....15.10
ABS MODULE / ASSEMBLY VIEW....15.11
WHEEL SPEED SENSOR - FRONT....15.12
WHEEL SPEED SENSOR - REAR....15.13
FRONT BRAKE CALIPERS....15.14
REAR BRAKE CALIPER....15.15
ABS SYSTEM CIRCUIT DIAGRAM....15.16
ABS SYSTEM SERVICE....15.17
WHEEL SPEED SENSOR SERVICE....15.17
WHEEL SPEED SENSOR AIRGAP ADJUSTMENT (FRONT & REAR)....15.18
ABS MODULE SERVICE....15.18
ABS BRAKE SYSTEM BLEEDING....15.20
BRAKE FLUID REPLACEMENT & BLEEDING PRECAUTIONS....15.20
ABS BRAKE VACUUM BLEEDER....15.21
ABS FLUID CHANGE....15.21
ABS REAR BRAKE BLEEDING....15.21
ABS FRONT BRAKE SYSTEM BLEEDING....15.22
BRAKE LEVER RESERVE INSPECTION....15.23
BRAKE SYSTEM SERVICE....15.25
FRONT BRAKE PAD REPLACEMENT....15.25
REAR BRAKE PAD REPLACEMENT....15.27
BRAKE DISC INSPECTION (FRONT & REAR)....15.29
FRONT MASTER CYLINDER SERVICE....15.29
FRONT MASTER CYLINDER INSTALLATION....15.32
FRONT CALIPER SERVICE....15.32
FRONT CALIPER INSTALLATION....15.35
REAR MASTER CYLINDER SERVICE....15.36
REAR MASTER CYLINDER INSTALLATION....15.39
REAR CALIPER SERVICE....15.40

REAR CALIPER INSTALLATION 15.42
ABS TROUBLE CODES 15.42
TROUBLESHOOTING 15.43
BRAKE SYSTEM TROUBLESHOOTING 15.43
ABS SYSTEM TROUBLESHOOTING 15.45

GENERAL

BRAKE SYSTEM SAFETY

Use only genuine VICTORY replacement parts when servicing the brake system. Clean all system components prior to disassembly, including the fluid reservoir cover(s) to reduce the chance of debris entering the system during repair or maintenance work. Start with a clean work area away from dust, water or other contamination. Cleanliness is very important for proper brake system maintenance and repair. Follow procedure outlined in this manual carefully, including fastener torques and the application of special lubricant in required areas. Special lubricants are included with service kits.

⚠ WARNING

Contaminated brake discs or pads greatly reduce the amount of stopping force available & increase stopping distance. Brake discs can be cleaned using a commercially available brake disc cleaner. Follow the manufacturer instructions printed on the container. NEVER attempt to clean contaminated brake pads. Always replace pads as a set.

⚠ WARNING

The brake system uses ethylene-glycol based fluid (DOT 4). Do not use or mix with different types of fluid such as silicone-based (DOT 5) or any petroleum-based fluid.

Do not let water or moisture enter the master cylinder when refilling. Water significantly lowers the boiling point of the fluid and can result in poor braking.

Do not use brake fluid taken from old, used or unsealed containers. Never reuse brake fluid.

Keep brake fluid containers completely sealed and out of reach of children.

Brake fluid should be completely replaced every 24 months or 12,500 miles.

Brake hoses should be replaced whenever the exterior shows signs of deterioration or damage. Brake hoses should be replaced every four (4) years regardless of their exterior condition.

Bleed the brake system any time it is disassembled or when the brake action is spongy.

Always inspect the operation of the brakes before riding the motorcycle.

Replace sealing washers whenever brake lines are removed.

Always remove the master cylinder fluid reservoir cover and inspect the fluid level when brake pads are replaced.

NOTICE

Brake fluid and some types of brake cleaners will damage paint, plastics and some rubber compounds. Cover or remove plastic and painted parts before working on the brake system. If brake fluid is spilled on cosmetic surfaces, immediately rinse the area with a mild solution of soap and water until all traces of brake fluid are removed. Make sure the master cylinder reservoir being worked on is level and clean before removing the cap.

BRAKE SERVICE SPECIAL TOOLS

SPECIAL TOOL	PART NUMBER
Front Master Cylinder Snap Ring Pliers	Commercially Available
Caliper Piston Pliers	Commercially Available
Front Brake Lever Reserve Inspection Adapter	PV-50104
Vacuum Brake Bleeder (not required)	Commercially Available
Pressure / Vacuum Pump (not required)	PV-43545
Wheel Speed Sensor Shim Kit	2204661

GENERAL SPECIFICATIONS

Brake System Specification

ITEM	STANDARD	SERVICE LIMIT
Specified Brake Fluid	DOT 4	Replace every 24 months or 12,500 miles
Brake Disc Thickness, Front	5 mm	4.5 mm (0.177") (Min)
Brake Disc Thickness, Rear	7 mm	6.5 mm (0.256") (Min)
Brake Disc Runout	-	0.30 mm (0.012") (Max)
Brake Pad Wear Limit (Front & Rear)	-	When wear limit groove is no longer visible
Brake Pedal Free Play (Pedal Clearance)	Floorboards: 1 - 2 mm (0.040 - 0.080")	-
Brake Lever Freeplay (Front)	No Adjustment	-
Wheel Speed Sensor Air gap (ABS)	1 mm (± 0.25 mm)	-
Lever Reserve Specification (Front)	35 lbf (lever adjusted to position 5) clearance present between lever and grip	
Pedal Travel Specification (Rear)	45 lbf applied to pedal results in maximum travel of 31 mm	

BRAKE SYSTEM TORQUE SPECIFICATIONS

Refer to the assembly views in this chapter for components not listed here.

DESCRIPTION	TORQUE N-M	TORQUE FT-LBS (IN-LBS)	NOTES
Bleed Screw, Caliper (Front and Rear Caliper)	5.4 N-m	(48 in-lbs)	
Brake Pad Retaining Pin (Front and Rear Caliper)	17.0 N-m	12.5 ft-lbs	
Footrest Support to Frame	47.5 N-m	35 ft-lbs	
Front Brake Caliper to Fork Leg	42 N-m	31 ft-lbs	
Front Brake Caliper Body Screws	27 N-m	20 ft-lbs	Loctite® 242 (Blue) E12 Reverse TORX
Front Brake Disc to Wheel Hub	30 N-m	22 ft-lbs	See Chapter 12
Front Brake Lever Pivot Screw	1.0 N-m	(9.0 in-lbs)	
Front Brake Lever Pivot Screw Nut	6.0	(52 in-lbs)	
Front Brake Light Switch Screw	1.2 N-m	(11.0 in-lbs)	
Front Brake Line Banjo Bolt (All)	24.5 N-m	18 ft-lbs	
Front Brake Master Cylinder to Handlebar	10.8 N-m	(96 in-lbs)	Tighten rear screw first
Front Brake Master Cylinder Reservoir Cover	1.5 N-m	(14 in-lbs)	
Rear Brake Disc to Wheel Hub	30 N-m	22 ft-lbs	See Chapter 13
Rear Brake Line Banjo Bolt (All)	24.5 N-m	18 ft-lbs	
Rear Brake Master Cylinder Mounting Screws	10 N-m	(84 in-lbs)	
Rear Brake Pressure Switch to Manifold	13.5 N-m	10 ft-lbs	
Rear Brake Pressure Switch Manifold to Battery Box	11 N-m	(96 in-lbs)	
Rear Brake Reservoir Mounting Screw	11 N-m	(96 in-lbs)	
ABS Tone Ring to Brake Disc	30 N-m	22 ft-lbs	
ABS Module Bracket to Chassis	10.8 N-m	8 ft-lbs	
ABS Module to Bracket	10.8 N-m	8 ft-lbs	

ANTI-LOCK BRAKE SYSTEM (ABS)

ABS SYSTEM SAFETY PRECAUTIONS

Before working on a Victory motorcycle equipped with anti-lock brakes, review and understand all general brake system and brake fluid precautions on Brake System Safety, page 15.3, and the following ABS specific precautions and system information. Do not attempt maintenance or repair of the anti-lock brake system without the proper tools.

Troubleshooting specific to ABS is on ABS System Troubleshooting, page 15.45.

⚠ WARNING

Proper brake system bleeding is extremely important to ensure adequate lever reserve in the system. Always perform the Brake Lever Reserve test described in this manual after bleeding the anti-lock brake system.

- Operating with non-recommended tires or improper tire pressure may reduce the effectiveness of the anti-lock brake system.
- Always install the recommended size and type of tires specified for the vehicle.
- Always maintain the recommended tire pressure.
- Victory DOT 4 Brake Fluid is recommended. Change every 2 years or more often if contaminated.
- The anti-lock brake system will not prevent wheel lock-up, loss of traction, or loss of control *under all conditions*. Always adhere to all safe motorcycle-riding practices as recommended.
- It is not unusual to leave tire marks on the road surface during a hard braking event.
- The anti-lock braking system does not compensate for or reduce the risk associated with:
- excessive speed
- reduced traction on rough, uneven or loose surfaces
- poor judgement
- *improper operation*

ABS GENERAL INFORMATION

The Anti-Lock Brake System is a safety feature designed to prevent wheel lock-up and improve control of the motorcycle during extreme braking events, including:

- Panic braking
- Slick surface braking (such as wet road surfaces)
- Surface transitions (from asphalt to oily asphalt or cobblestone, etc.)

Here are a few general points to note about ABS:

- The anti-lock brake system cannot be turned OFF.
- The ABS indicator lamp (located on the Instrument Cluster) always illuminates when the key is in the ON position and remains on until the anti-lock system activates, which occurs when vehicle speed exceeds 6 mph (10 kph).
- If the lamp is not illuminated when the key is ON, connect Digital Wrench and perform an ABS System inspection to determine the cause.
- When the ABS lamp is illuminated, the anti-lock brakes will not activate, but the conventional brake system will continue to operate normally.
- If the lamp continues to illuminate after the vehicle speed exceeds 6 mph (10 kph), the system is not functioning. Connect Digital Wrench and perform an ABS System inspection to determine the cause.
- When the anti-lock brakes engage during a braking event, the rider will feel pulsing at the brake lever or pedal. *Continue to apply steady pressure to the brakes for the best stopping performance.*
- The wheel speed sensor-to-pulse ring air gap is adjustable. Shims can be added or removed to bring the air-gap into specification. See adjustment procedure outlined in this chapter.
- The ABS system is not re-programmable.
- The ABS light is controlled by the ECM via CAN BUS.
- Diagnostic codes are unique to ABS and can only be viewed with Digital Wrench. ABS Trouble Codes will not appear on the Instrument Cluster display as an SPN / FMI code.
- Wheel speed sensors are used only for ABS. The Vehicle Speed Sensor is used for vehicle speed.
- If fuse is open or removed, ABS light will remain ON after 6 mph (10 kph). ABS will not be active. Normal (conventional) braking will be available provided the system components (master cylinder, lines, calipers, etc.) are in working order.

ABS SYSTEM COMPONENTS

The following parts *function* in the same manner as the same component in a non-ABS system, although parts are not necessarily interchangeable. Always refer to the appropriate ABS parts information when replacing a component or component parts. Refer to the non-ABS portion of this chapter for removal, installation, operational overview, and repair of these components. Refer to ABS System Components, page 15.7 for ABS System Component Diagram.

- Front Brake Calipers
- Rear Brake Caliper
- Front Master Cylinder
- Rear Master Cylinder
- Brake Light Switch
- Brake Lines

In addition to the brake system components listed above, the following are used on ABS equipped vehicles:

- Wheel Speed Sensors (Front located on front left fork leg; Rear mounted on rear caliper bracket)
- Wheel Speed Sensor Pulse Rings (Front and Rear mounted to wheel with 3 disc bolts)
- ABS Module Assembly
- ABS Related Wiring
- ABS Indicator Lamp

ABS OVERVIEW OF OPERATION

The ABS system is active and available when vehicle speed exceeds 6 mph (10 kph).

The system uses two independent Hall-Effect *Wheel Speed Sensors*. One sensor is mounted to the front left fork leg and one is mounted to the rear brake caliper bracket. Two *Pulse Rings* are also used, one mounted to the left front brake disc hub and one to the rear brake disc hub, which rotate with the wheels. When the vehicle is in motion, the multiple reluctor segments on each pulse ring pass by the center pole of the respective wheel speed sensor, generating an electrical pulse signal in the sensor which is sent to the *ABS Module* which is located under the rear fender.

The ABS Module interprets wheel speed signal pulses to determine speed, rate-of-change, and front / rear wheel speed differential to determine if wheel lock-up is about to occur. When wheel lock-up is imminent during a braking event, the ABS Module controls the operation of solenoids and a pressure pump (located inside the *ABS Module)* to regulate the amount of line pressure and cycles (length of time) applied to the caliper pistons and brake pads. This pressure / time modulation can often be felt at the brake lever or the brake pedal during an ABS braking event and is a normal condition. Note that the brake fluid is not diverted inside the module and does not "flow" in the system any more than occurs in a conventional (non-ABS) brake system.

If the surface coefficient changes (such as moving from wet pavement to dry pavement) the ABS system will recalculate (in a matter of milliseconds) and adjust pressure output to caliper(s) as required.

In the event of a system fault, the ECM turns on the ABS indicator lamp (via the CAN BUS) and leaves it on even after vehicle speed exceeds 6 mph (10 kph) activation speed.

If a system fault occurs, the light will remain on (and ABS will not be active) until the ignition key is turned to OFF position and back to ON.

The ABS Module Assembly is serviceable only as an assembly. The module itself is not rebuildable.

Disconnect negative (-) battery cable from battery before servicing ABS brake lines or system components.

ANTI-LOCK BRAKE SYSTEM OVERVIEW

FRONT BRAKE (ABS)

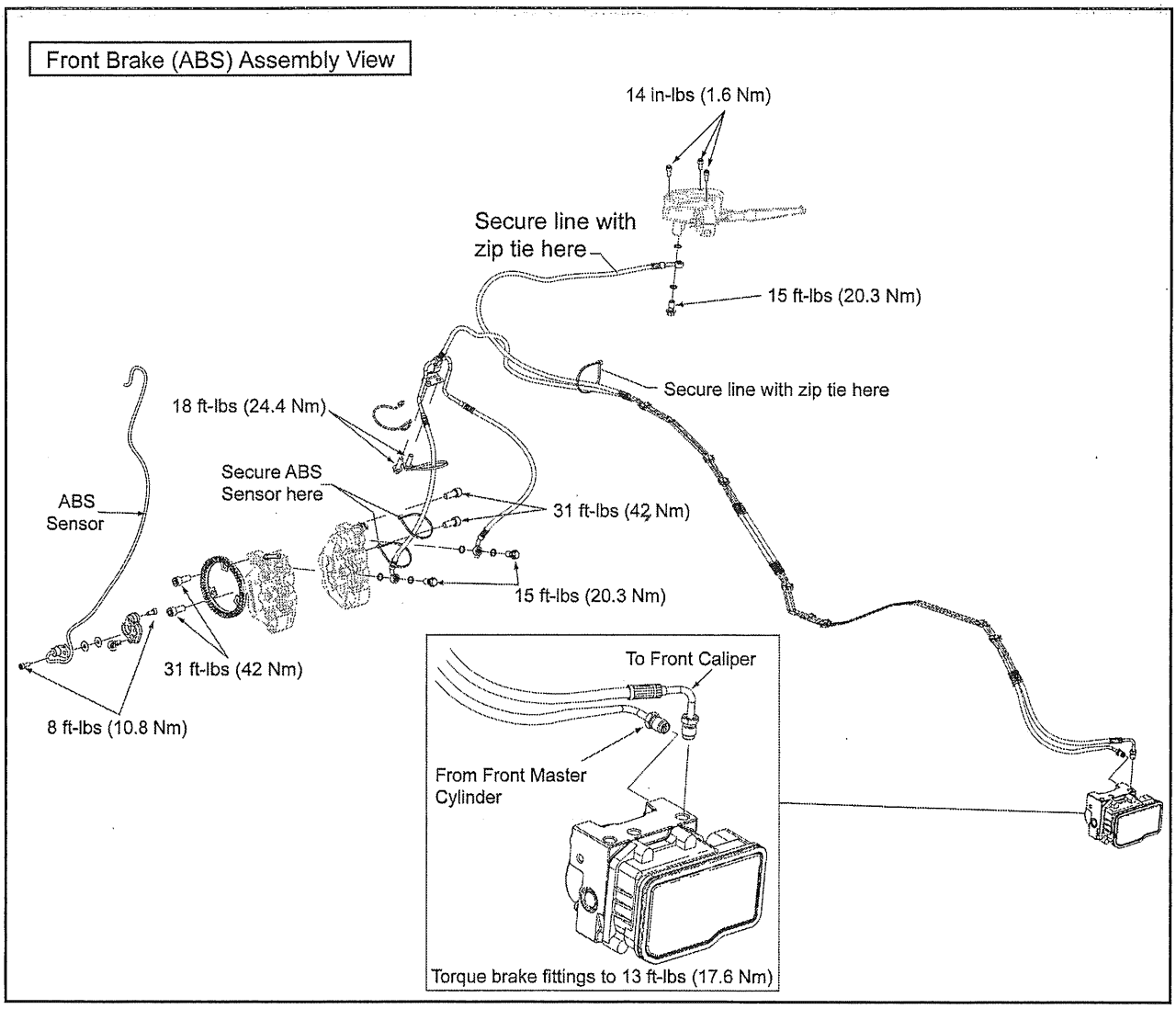

REAR BRAKE (ABS)

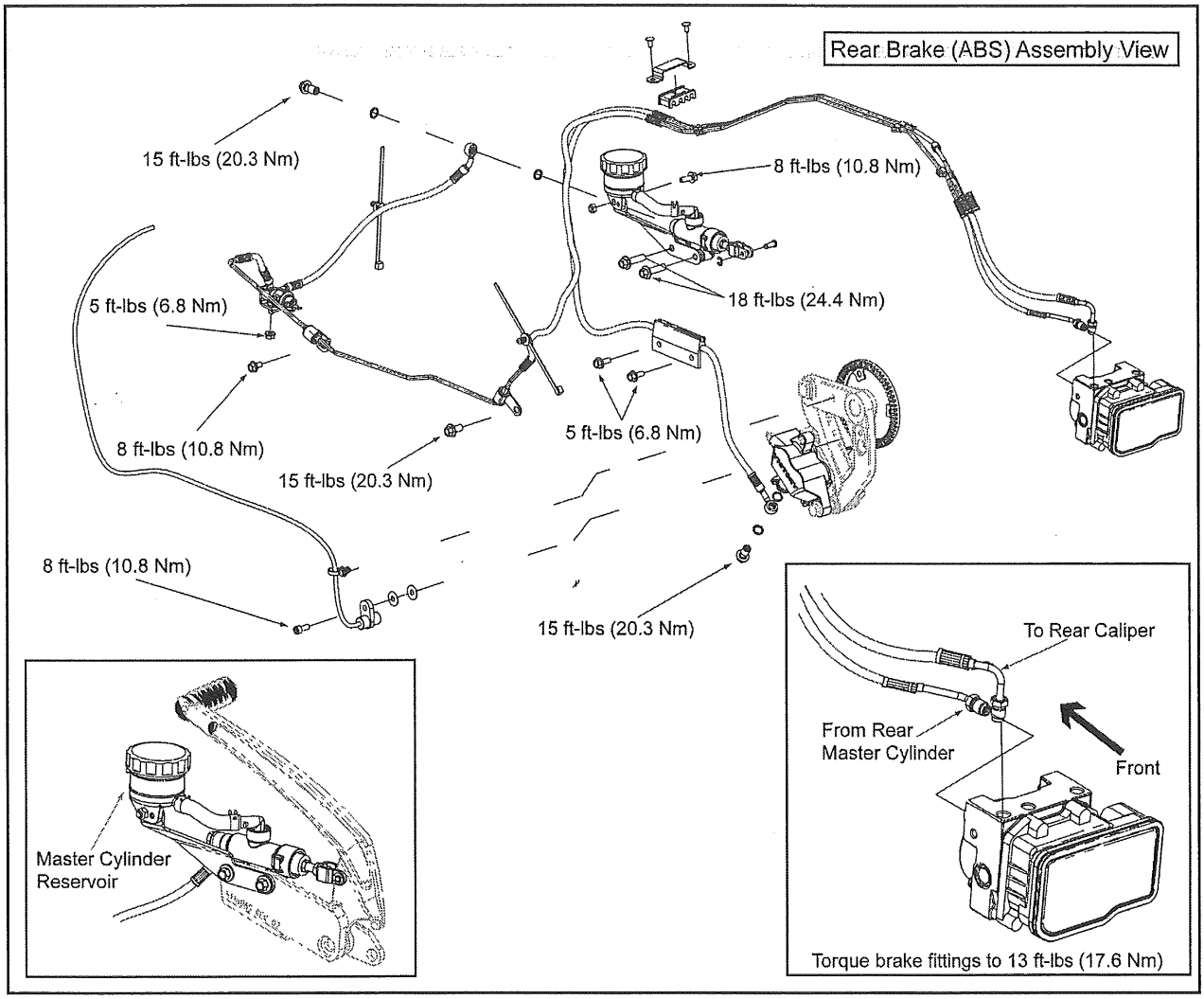

15

MASTER CYLINDERS / ASSEMBLY VIEW

NOTE

The adjustable brake lever was removed for model year 2016.

Front Brake Master Cylinder

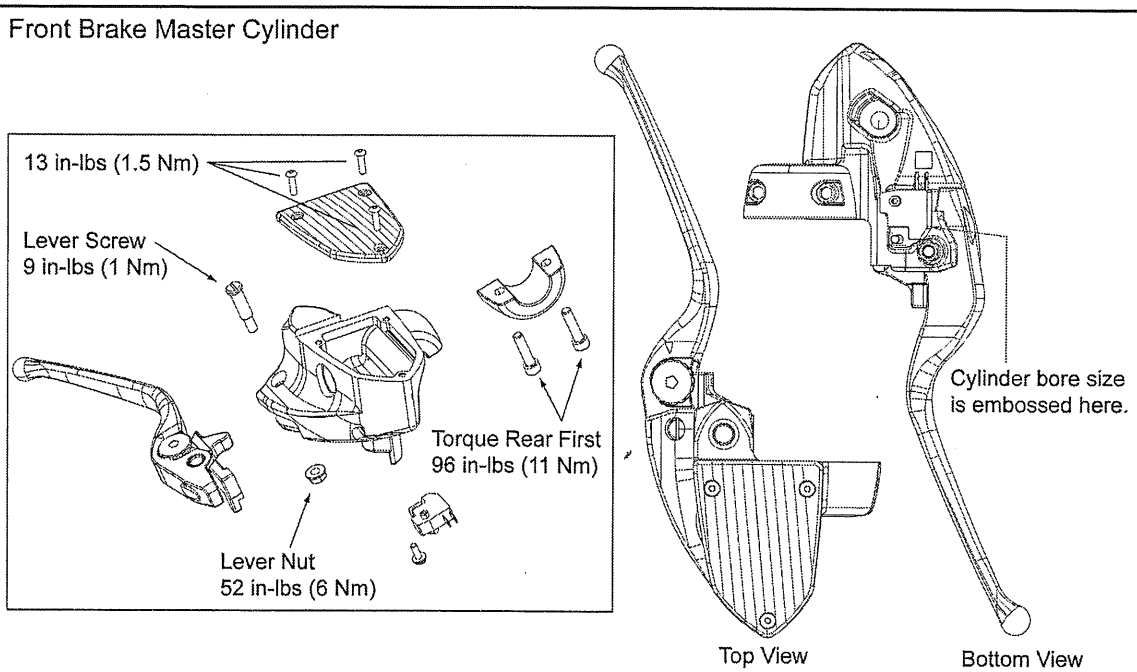

Rear Brake Master Cylinder

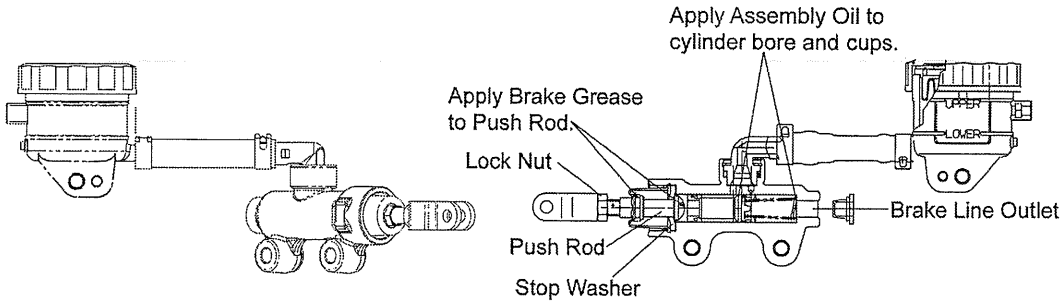

Refer to Brake System Service Procedures in this Chapter for detailed Master Cylinder Rebuild Instructions.

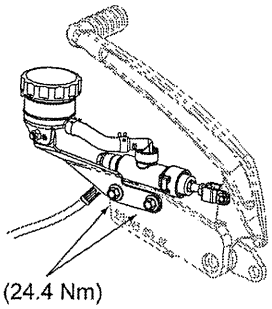

ABS MODULE / ASSEMBLY VIEW

ABS Module / Assembly View

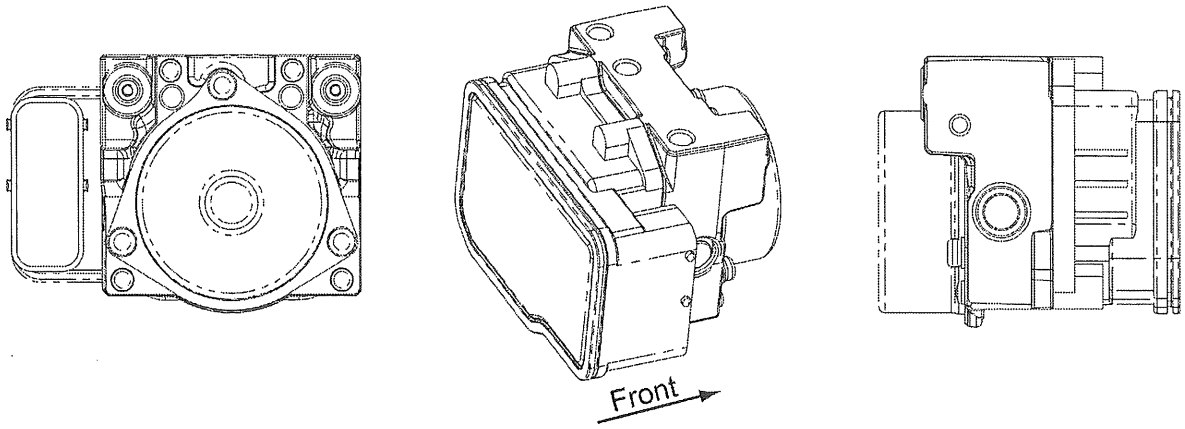

Hydraulic Circuit Diagram

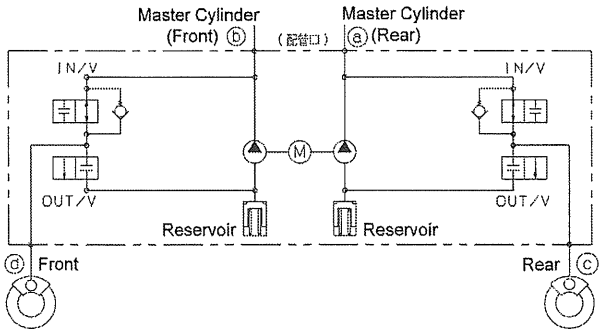

Terminal Layout (Module Side)

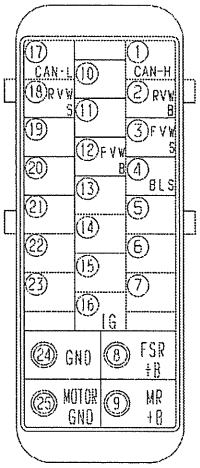

Pinout Key

MTR GND: MOTOR GROUND
GND: GROUND
CAN-L: CAN LOW
CAN-H: CAN HIGH
RVWS: REAR VELOCITY WHEEL SIGNAL
RVWB: REAR VELOCITY WHEEL BATTERY
FVWS:FRONT VELOCITY WHEEL SIGNAL
FVWB: FRONT VELOCITY WHEEL BATTERY
BLS: BRAKE LIGHT SWITCH
IG: IGNITION
FSR: FAIL SAFE RELAY
MR: MOTOR RELAY

ABS Brake Line Routing

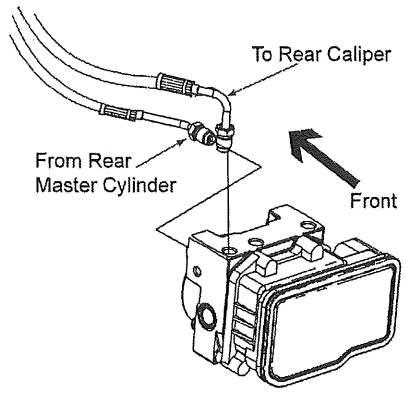

Torque brake fittings to 13 ft-lbs (17.6 Nm)

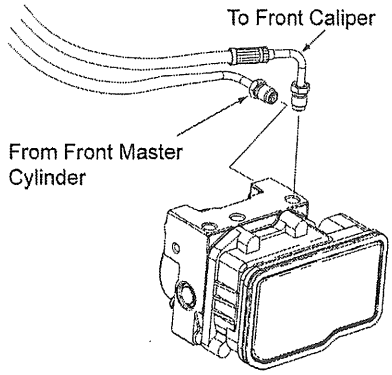

Torque brake fittings to 13 ft-lbs (17.6 Nm)

WHEEL SPEED SENSOR - FRONT

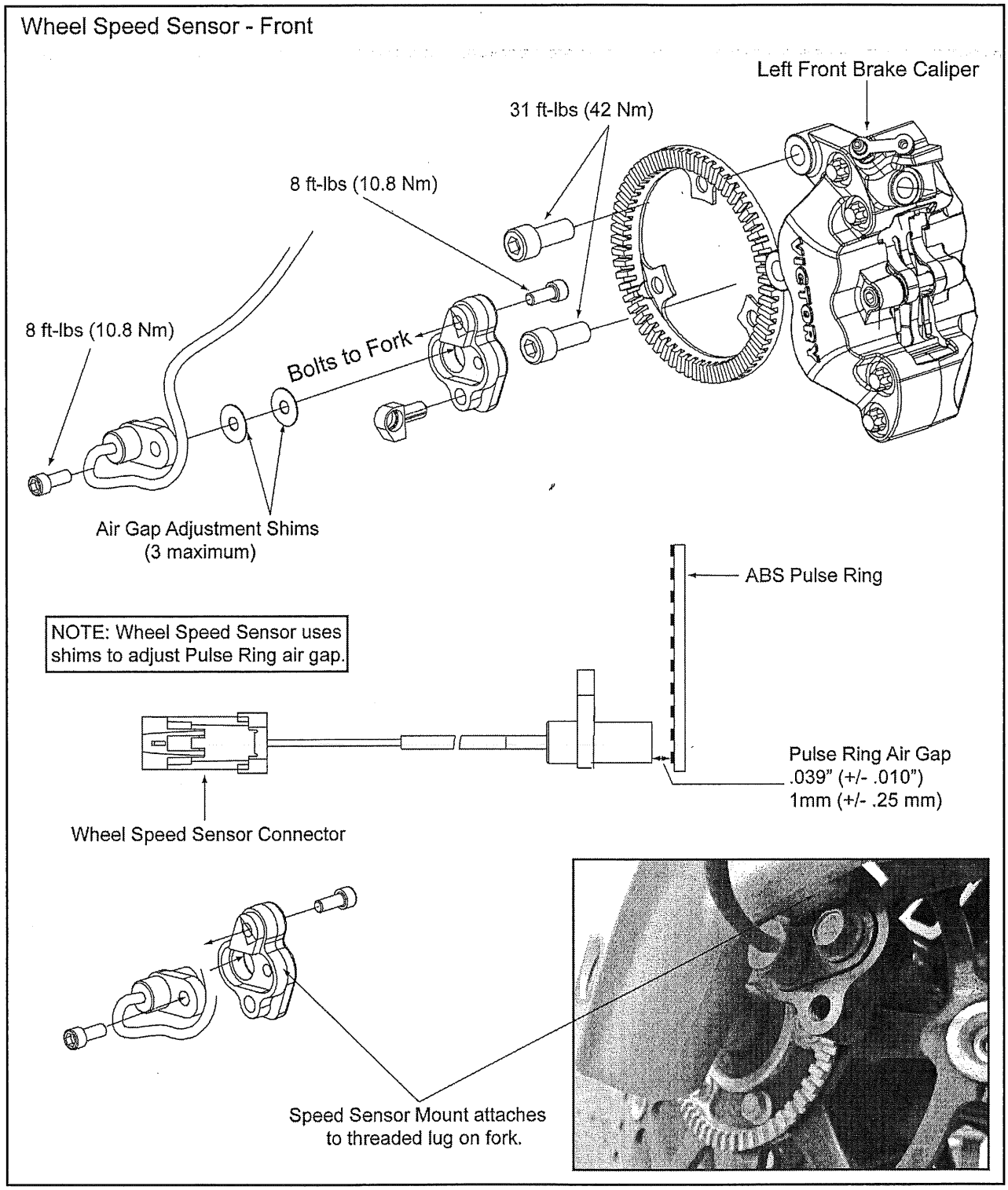

WHEEL SPEED SENSOR - REAR

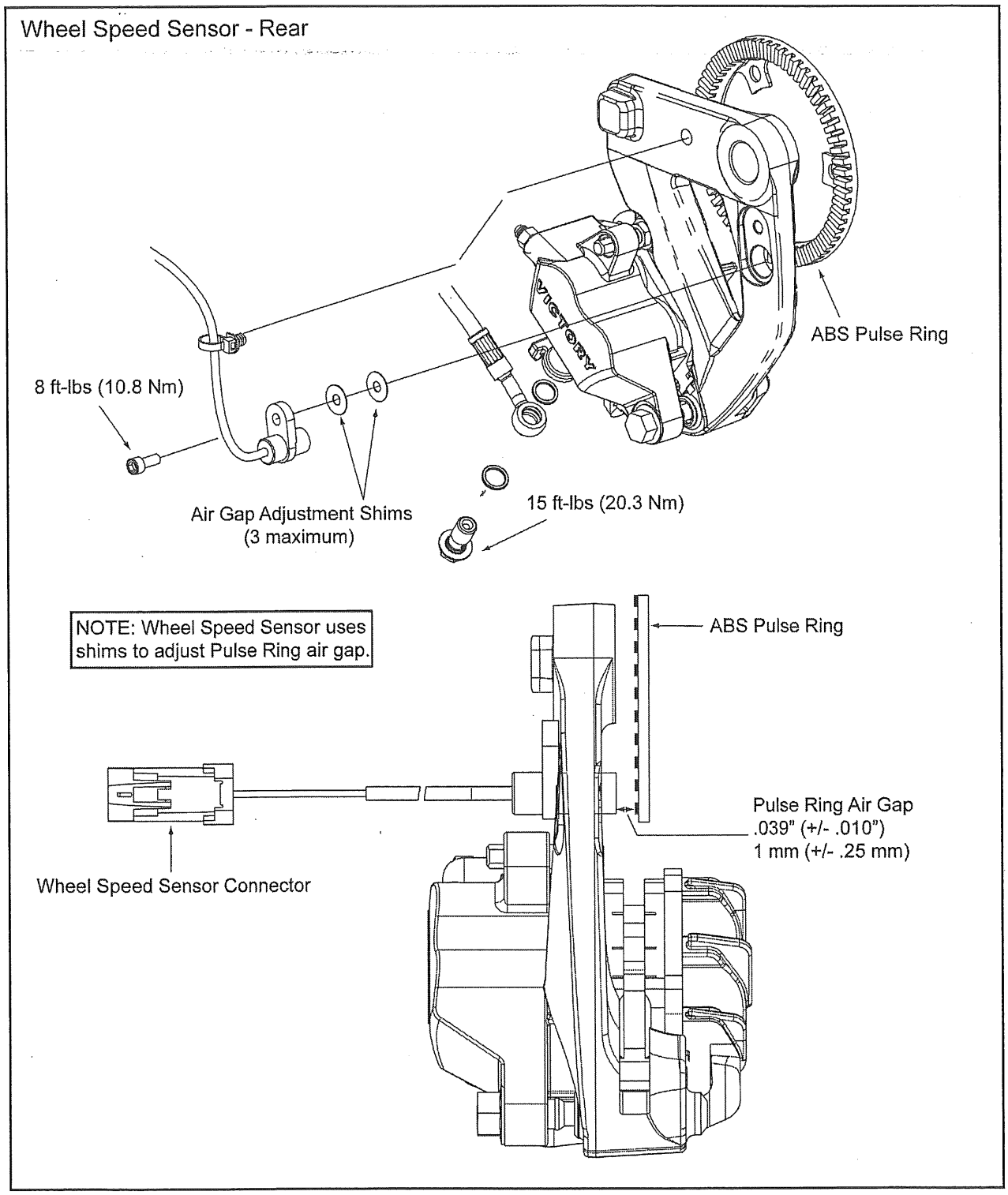

FRONT BRAKE CALIPERS

This symbol indicates special lubricant from service kit must be applied to this part.

Refer to assembly views and rebuild procedure for detailed application of special lubricants.

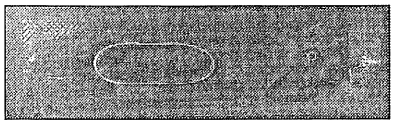

CCI OIL (009-Z00-313)
Application: **Internal:** Caliper pistons.

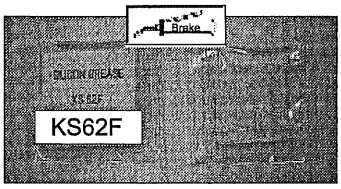

SILICONE GREASE (009-Z00-111) KS62F
Application: **Internal:** Caliper piston seals, piston dust seals.
External: O-ring at tip of pad retaining pin.

LH CALIPER SHOWN

FRONT

Piston
Apply special assembly OIL (009-Z00-313) (included with parts kit)

(009-Z00-111) Piston Seal

O-Ring

(009-Z00-111) Dust Seal

Pad Spring

Bleeder Screw
48 in-lbs (5.4 Nm)

(009-Z00-111)

Clean all grooves

Inner Pad

Outer Pad

Piston
Apply special assembly OIL (009-Z00-313) (included with parts kit)

Piston Seal (009-Z00-111)

Dust Seal (009-Z00-111)

Caliper Body Bolt
20 ft-lbs (27 Nm)
Loctite 242 (Blue)
E12 Reverse TORX

Pad Retaining Pin
120 in-lbs (13.5 Nm)

REAR BRAKE CALIPER

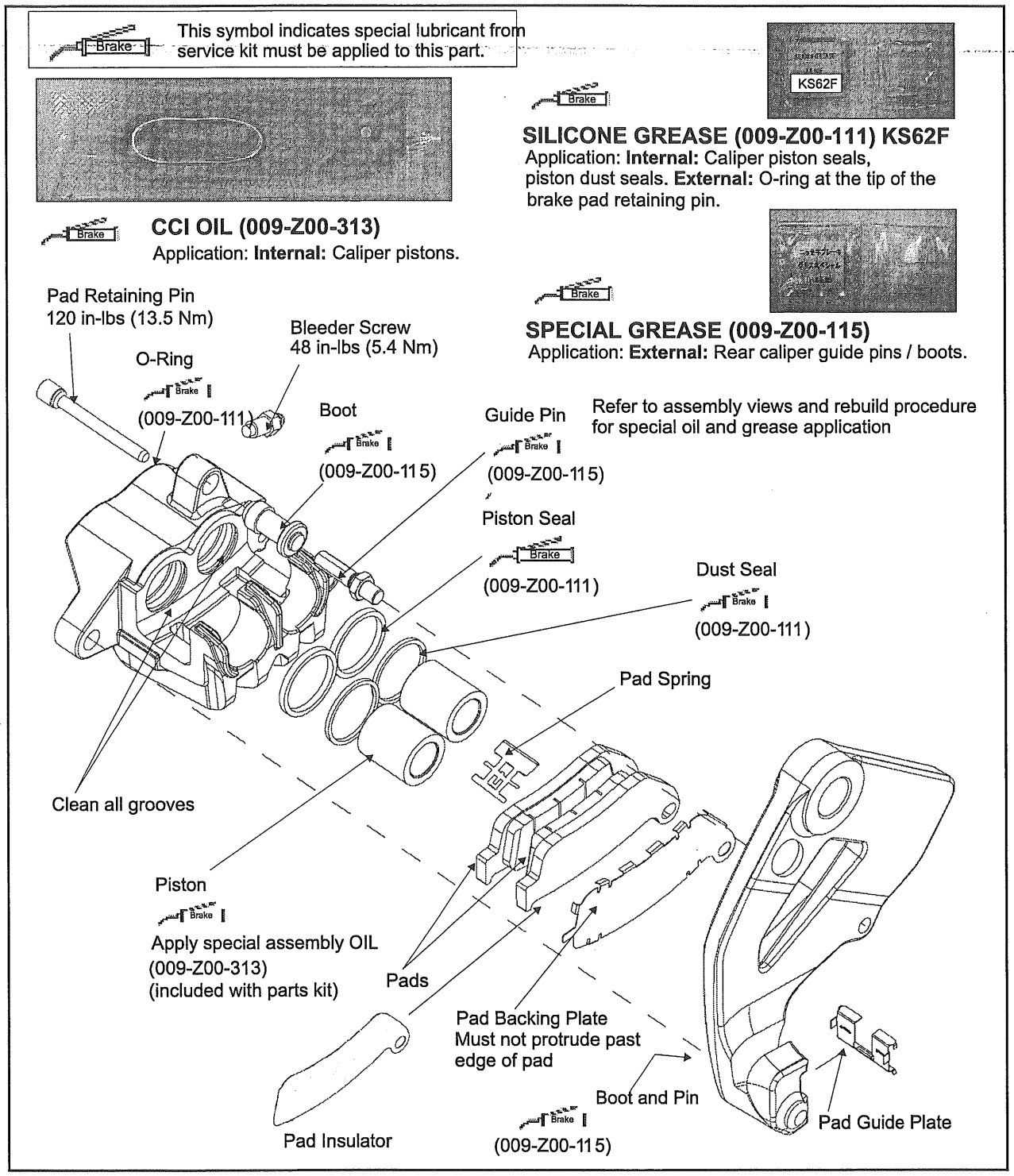

15

ABS SYSTEM CIRCUIT DIAGRAM

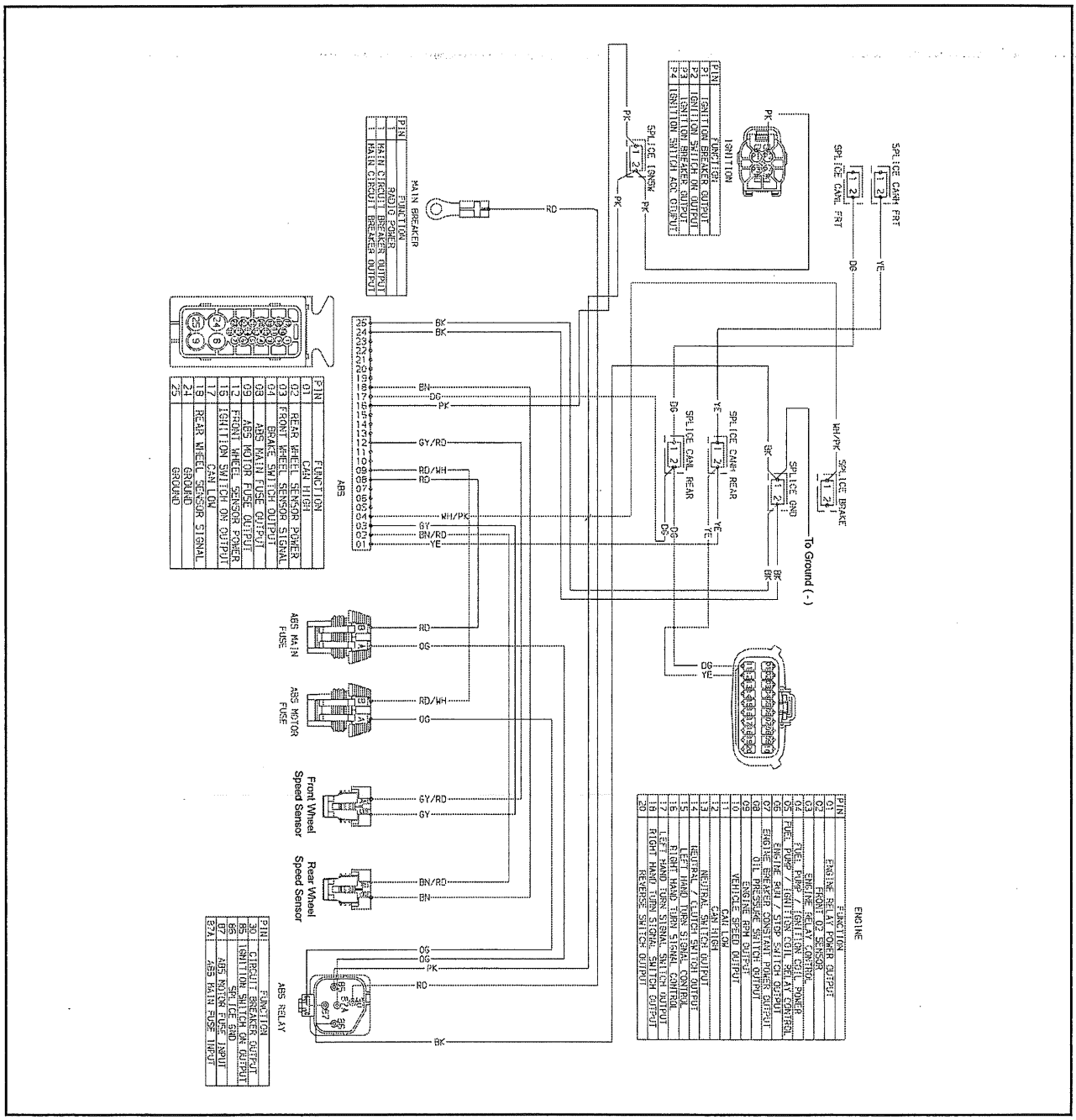

ABS SYSTEM SERVICE

WHEEL SPEED SENSOR SERVICE

Removal - Front

1. Remove bolt (A) securing the Wheel Speed Sensor to bracket.

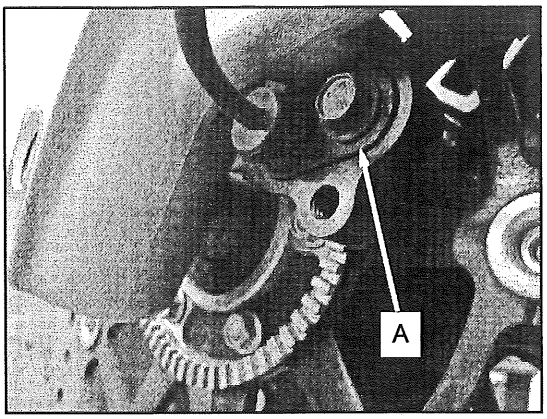

2. Withdraw speed sensor and remove any existing shims.
3. Remove headlamp assembly (Headlamp Bezel, page 3.11) to access speed sensor plug, and disconnect.

- Cross Country speed sensor connector is located behind the headlamp assembly.
- Cross Roads speed sensor connector is located in headlamp bucket.

Installation - Front

4. Reverse procedure to install.
5. Verify speed sensor air gap is within specification. Perform adjustment procedure if necessary.

Removal - Rear

6. Remove left hand saddlebag (see Saddlebag, Removal / Installation (Unbolted), page 3.28).
7. Remove bolt (A) securing the Wheel Speed Sensor to the bracket.

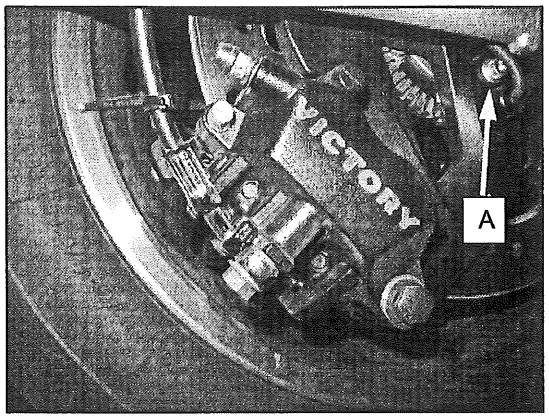

8. Withdraw speed sensor and remove any existing shims.
9. Remove left hand side cover (see Side Cover Removal, page 3.27) to access speed sensor plug, and disconnect.

Installation - Rear

10. Reverse procedure to install.
11. Verify speed sensor air gap is within specification. Perform adjustment procedure if necessary.

WHEEL SPEED SENSOR AIRGAP ADJUSTMENT (FRONT & REAR)

MEASUREMENT

Wheel Speed Sensor Air gap
0.040" (± 0.010") / 1 mm (± 0.25 mm)

NOTE

Wheel Speed Sensor air gap is adjusted by adding and removing shims. Shims are added to increase gap and removed to decrease gap. No more than 3 shims (per Wheel Speed Sensor) should be used at one time.

1. Using a suitable feeler gauge, measure the air gap between the ABS Pulse Ring and the Wheel Speed Sensor.

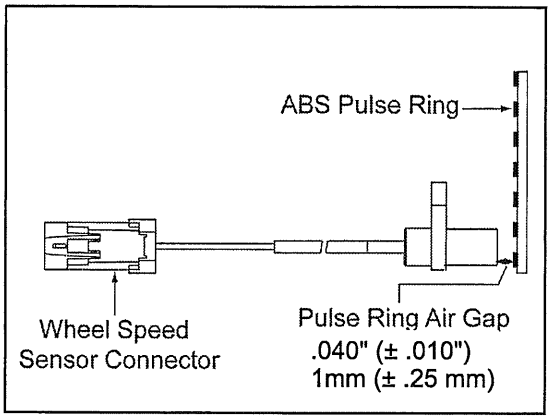

2. If the Wheel Speed Sensor air gap is out of specification, proceed to step 3.
3. Remove Wheel Speed Sensor from bracket.
4. Withdraw the speed sensor and remove any existing shims.
5. Based on air gap measurement, add or remove shims to achieve the specified air gap.

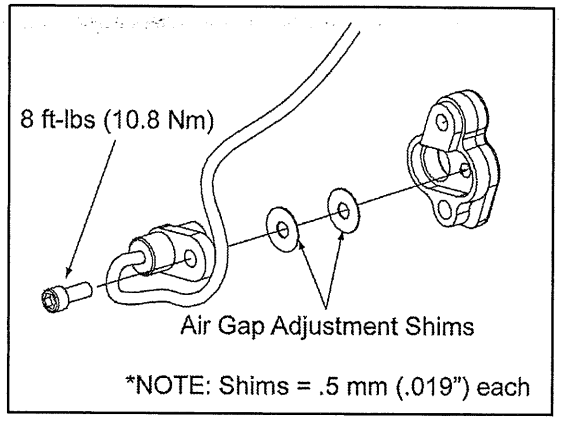

6. Reinstall Wheel Speed Sensor and torque to specification.

TORQUE

Wheel Speed Sensor:
8 ft-lbs (11 Nm)

ABS MODULE SERVICE

NOTE

Do not disassemble the ABS module. The ABS module is serviceable only as a sealed (pre-bled) assembly. If ABS module has failed internally, replace complete assembly.

⚠ WARNING

The hydraulic brake system MUST be completely bled following removal or replacement of the ABS module. Follow the brake bleeding procedure outlined in this chapter after ABS module service.

Removal

1. Remove saddlebags. (see Saddlebag, Removal / Installation (Unbolted), page 3.28)
2. Remove closeouts if applicable. (Frame / Body / Exhaust Chapter)
3. Remove trunk if applicable. (Trunk , page 3.37)
4. Remove rear fender. (Rear Fender (Magnum), page 3.36, Rear Fender / Saddlebag Mount, page 3.35)
5. Disconnect hydraulic lines (4) from ABS module and cap off lines to prevent contamination.

6. Remove screws securing ABS module to bracket and disconnect multi plug.
7. Remove ABS module.

   Installation

8. Reverse procedure to install.
9. Bleed brake system as outlined in this chapter.
10. Attach Digital Wrench and check for ABS trouble codes.

ABS BRAKE SYSTEM BLEEDING

BRAKE FLUID REPLACEMENT & BLEEDING PRECAUTIONS

⚠ WARNING

Contaminated brake discs or brake pads greatly reduce braking performance and increase stopping distance. Do not attempt to clean contaminated pads. Replace them. Clean the brake disc with brake cleaner.

⚠ WARNING

This brake system requires ethylene-glycol based fluid (DOT 4). Do not use or mix different types of fluid such as silicone-based or petroleum-based.

⚠ WARNING

Do not use brake fluid taken from old, used or unsealed containers. Never reuse brake fluid. Brake fluid can accumulate moisture, reducing it's performance.

⚠ WARNING

Brake fluid is poisonous. Keep brake fluid tightly sealed and out of reach of children.

⚠ WARNING

A soft, spongy feeling in the brake lever and/or brake pedal could indicate a hazardous condition in the brake system. Do not operate the motorcycle until the failure in the brake system is corrected.

⚠ WARNING

An unsafe condition exists when air is trapped in the hydraulic brake system. Air in the brake hydraulic system acts like a soft spring and absorbs a large percentage of the pressure developed by the master cylinder. Without this pressure, the braking system cannot develop full braking force to allow for safe, controlled stops. It is extremely important to bleed the brakes properly after any brake system work has been performed or when inspection reveals spongy brakes.

Keep these points in mind when bleeding hydraulic brakes:

- The master cylinder reservoirs have limited capacities. It is easy to empty them during the bleeding procedure. This introduces air into the system which you are trying to purge. Watch the reservoir closely and add fluid when necessary to keep the level above the LOW mark and prevent air from re-entering the system.
- Apply only light to moderate pressure to the lever or pedal when bleeding the brake system. Extreme pressure or rapid movement will cause a surge of fluid through the small orifices of the brake system when the bleeder screw is opened and could introduce air into the system by means of cavitation.
- Small amounts of air can become trapped in the banjo bolt fittings at the master cylinder(s) and junction points of brake lines. These fittings can be purged of air by following a standard bleeding procedure at these fittings (instead of the bleed screw on caliper) if necessary to speed the bleeding process. This is usually only needed if system was completely drained of fluid. Bleed each line connection, starting with the fitting closest to the master cylinder, working toward the caliper, and ending with the bleed screw.
- Always torque banjo bolts and other brake system fasteners and components to specified torque.
- Always install NEW genuine Victory replacement parts and rubber parts upon assembly. Apply special lubricant where indicated (included in service kits).

ABS BRAKE VACUUM BLEEDER

A vacuum bleeder is recommended for ABS system bleeding and can also be used to bleed conventional (non-ABS) brake systems. One style of bleeder is shown below.

Pressure / Vacuum Pump PV-43545 can also be used as a vacuum source.

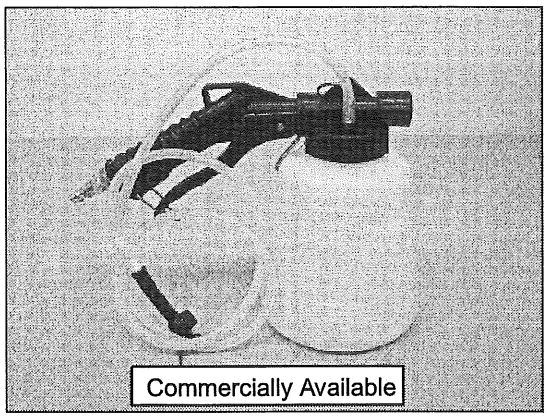

ABS FLUID CHANGE

Review Brake Fluid Replacement and Bleeding Precautions on Brake Fluid Replacement & Bleeding Precautions, page 15.20 before working with brake fluid.

NOTE

When bleeding or flushing the system, monitor fluid level in master cylinder reservoir constantly. DO NOT allow fluid level to fall below the LOW level.

Use only DOT 4 brake fluid from a sealed container.

NOTE

EMPTY LINES - If system is dry or very low on fluid due to parts replacement or disassembly, fill reservoir and pump lever or pedal slowly through stroke range until air bubbles no longer rise through the fluid into the reservoir.

FLUSHING THE SYSTEM - Brake systems should be flushed every 2 years or more often if the fluid is discolored. To flush the system, follow normal brake bleeding process, and pump fluid through the system until fluid moving through the bleeder hose is clear. Do not allow reservoir level to fall below the LOW level or complete system bleeding will be required.

ABS REAR BRAKE BLEEDING

NOTE

The use of a vacuum bleeder is recommended. DO NOT allow fluid level in reservoir to drop below the LOW mark at any time during the bleeding procedure. Repeat entire bleed procedure at least once.

1. Remove rubber cap from rear caliper bleed screw (A) and place a box end wrench on the screw.
2. Attach a tight-fitting clear hose from the vacuum bleeder to the bleed screw and apply vacuum.

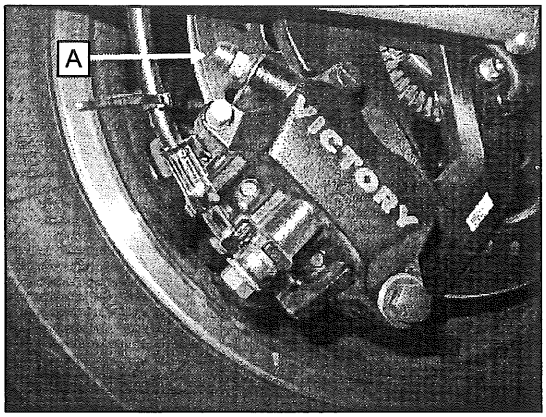

3. Fill rear brake fluid reservoir and leave cover off so fluid can be added as it is drawn through the system.
4. Open bleed screw about 1/4 turn.
5. Pump brake pedal repeatedly with smooth full strokes while adding brake fluid to the reservoir as required. For best results pump the pedal at a fairly rapid rate but avoid pumping too fast or fluid may become aerated. After about 2 cups of fluid have been run through the system, the bleeder hose should have clear, bubble-free fluid running through it.
6. Close bleeder screw and fill the brake fluid reservoir.

7. *Repeat the entire bleeding process* to be sure all air is purged from the system.

NOTE

A properly bled rear brake system should not allow the brake pedal to travel more than 31 mm (1.2") with 45 lbf. (20.4 kgf) of force applied.

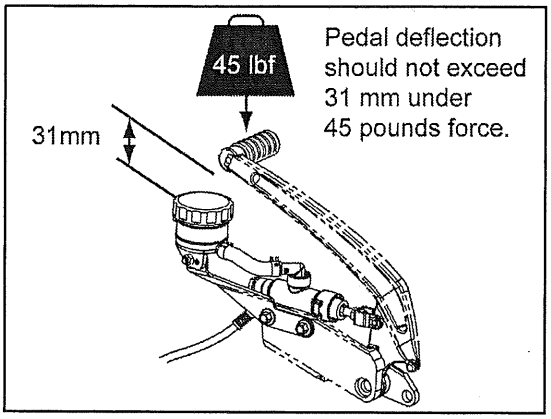

8. Torque all bleed screws to specification and install the rubber caps.

TORQUE

Bleed Screws:
48 in-lb (5 Nm)

9. After completing the bleeding procedure a second time, inspect brake fluid level and add if necessary.
10. Clean the reservoir cover, diaphragm, and reservoir sealing surface. If diaphragm is extended, return it to normal (flat) position. Install diaphragm and cover.
11. If pedal is not firm, repeat bleeding procedure and insect brake system. See Troubleshooting at the end of this chapter.

ABS FRONT BRAKE SYSTEM BLEEDING

NOTE

Bleed left front caliper first then right caliper. Repeat the bleeding procedure at least once.

1. Pull brake lever forward and rotate reach adjustment dial to the "1" position (longest reach) to maximize lever stroke for bleeding.

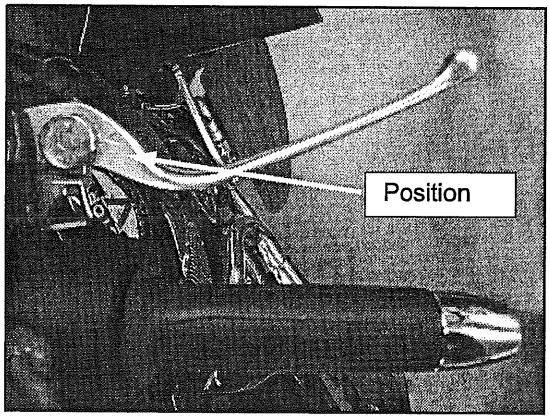

2. Remove front brake fluid reservoir cover and leave it off so fluid can be added as it is drawn through the system.
3. Remove rubber cap from bleeder screw on *front left* caliper and place a box end wrench (A) on the screw.
4. Attach tight fitting clear hose from vacuum bleeder to bleed screw and apply vacuum.

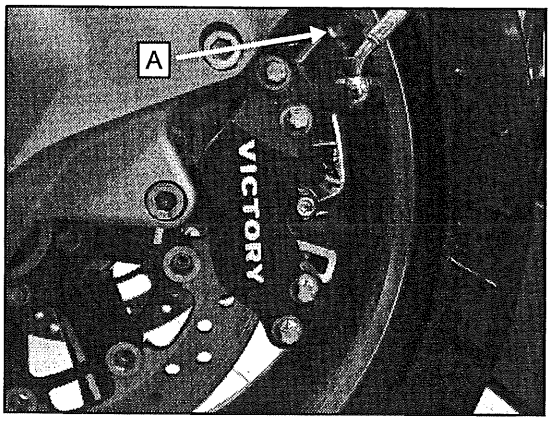

5. Hold lever to handlebar or hold firm pressure on lever, then open bleed screw about 1/4 turn.

6. Pump brake lever repeatedly with smooth full strokes while adding brake fluid to the reservoir as required. For best results pump the lever at a fairly rapid rate but avoid pumping too fast or fluid may become aerated. After about 2 cups of fluid have been run through the system, the bleeder hose should have clear, bubble-free fluid running through it.
7. Close bleeder screw and fill the brake fluid reservoir.
8. Proceed to Step 9 to bleed the right front brake caliper.
9. Remove rubber cap from bleeder screw (A) on *front right* caliper and place a box end wrench on the screw.
10. Connect vacuum bleeder hose to the bleed screw and start vacuum.

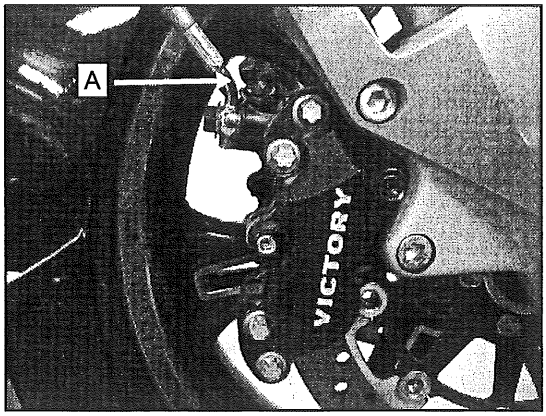

11. Hold lever to handlebar or hold firm pressure on lever, then open bleed screw about 1/4 turn.
12. Pump brake lever repeatedly with smooth full strokes while adding brake fluid to the reservoir as required. For best results pump the lever at a fairly rapid rate but avoid pumping too fast or fluid may become aerated. After about 2 cups of fluid have been run through the system, the bleeder hose should have clear, bubble-free fluid running through it.
13. Close bleed screw.
14. Once both front calipers have been bled, repeat procedure again on left caliper, then right to ensure all air has been purged.
15. Fill fluid reservoir and install diaphragm and cover. Torque screws to specification.

TORQUE
Fluid Reservoir Cover: **13 in-lb (2 Nm)**

16. Perform Brake Lever Reserve Inspection on Brake Lever Reserve Inspection, page 15.23.

BRAKE LEVER RESERVE INSPECTION

1. Turn handlebars fully LEFT.
2. On levers with adjustable reach, set lever reach to position 5 (closest to handlebar).

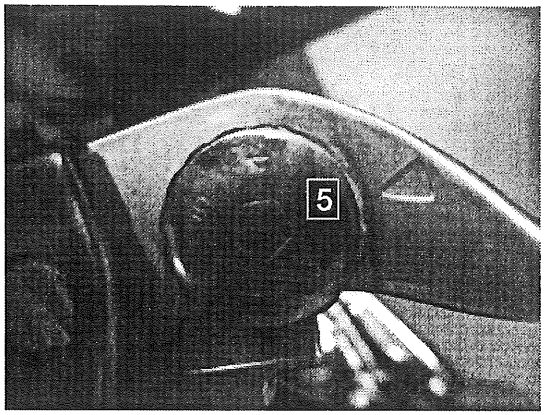

3. Place grommet of Brake Lever Reserve Inspection Tool PV-50104 on ball end of front brake lever.

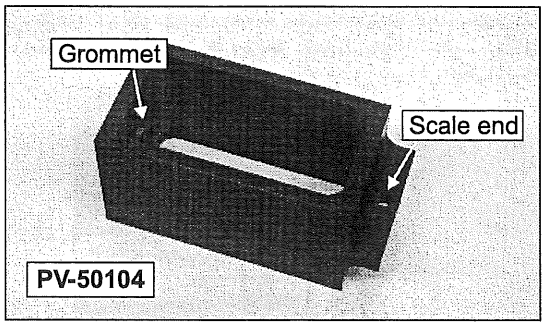

4. Connect a scale (commercially available) with a minimum of 25 kg / 50 lb capacity to end of tool.

5. Keep tool centered so it does not touch hand grip. Pull on scale to specified force.

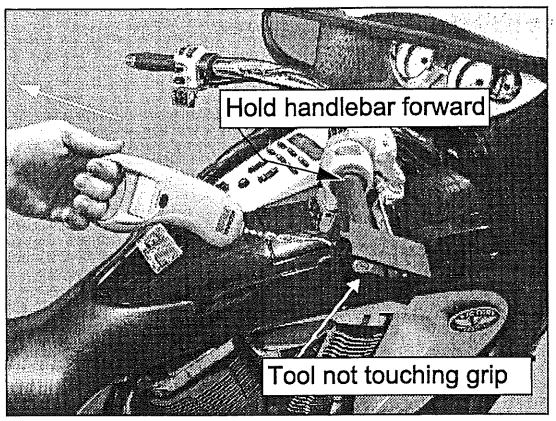

Front Brake Lever Reserve Pull Force

MODEL	PULL FORCE (MINIMUM)
Cross Country, Magnum, Cross Country Tour	15.5 kg (35 lbs).

6. Have an assistant verify brake lever *does not* contact hand grip. Clearance must exist at specified pull force as shown.

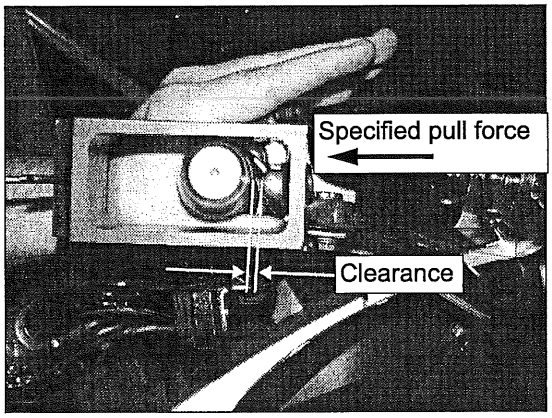

7. If lever makes contact with hand grip or bar end, bleed the front brake system (ABS FRONT BRAKE SYSTEM BLEEDING, page 15.22).
8. See troubleshooting if bleeding problems persist.

BRAKE SYSTEM SERVICE

FRONT BRAKE PAD REPLACEMENT

NOTE

Always replace brake pads as a set. Pads can be changed with caliper installed on the motorcycle. Refer toFront Brake Pad Inspection, page 2.18 for front pad inspection.

1. Remove brake pad pin (A).

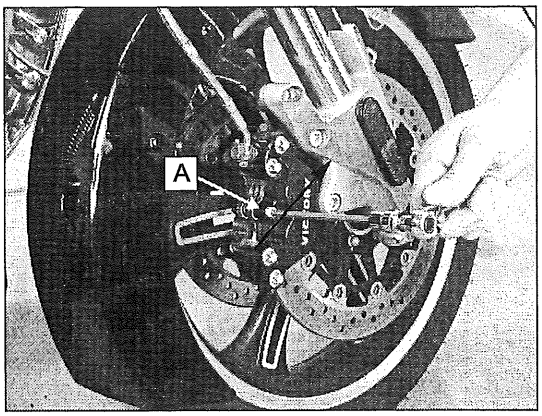

2. Push inward on spring (B) and remove pin. Note orientation of sprint plate for assembly.

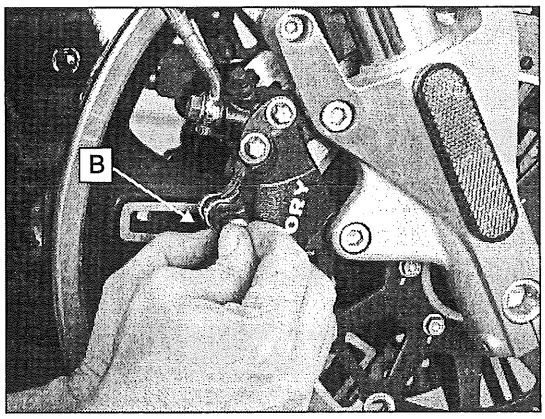

3. Push each pad back toward outside of caliper by hand or use a non-marring wedge to gain clearance for new pads.

NOTE

Brake fluid will be forced back into the reservoir when pads / pistons are pushed back. Remove reservoir cover and monitor fluid level, or attach a hose to brake bleeder screw (as described in Brake Bleeding on ABS FRONT BRAKE SYSTEM BLEEDING, page 15.22) and open the bleed screw while pushing the pads and pistons back.

4. Slide inner and outer pad out of the caliper.

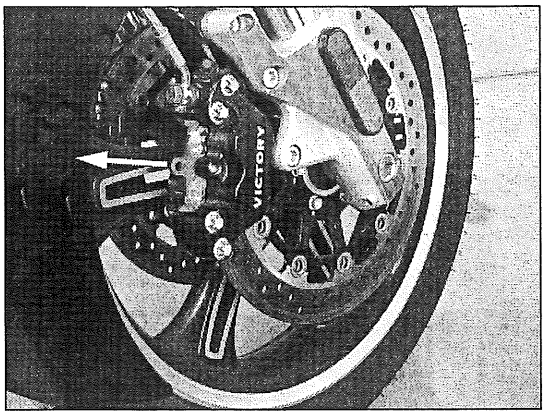

5. Wipe brake disc clean with a shop towel sprayed with Victory Brake Cleaner.
6. Inspect caliper piston seals for any sign of fluid leakage.
7. Install isolator on new brake pads. Be sure isolator plate (C) does not protrude from the brake backing plate.

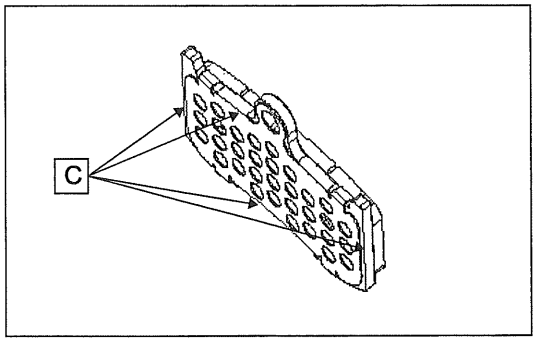

8. Apply a small amount of Silicone Grease (009-Z00-111) to O-ring on the end of the pad retaining pin.
9. Slide the outer pad into place with friction material toward disc, align pin hole and star pin through pad to hold it in place.

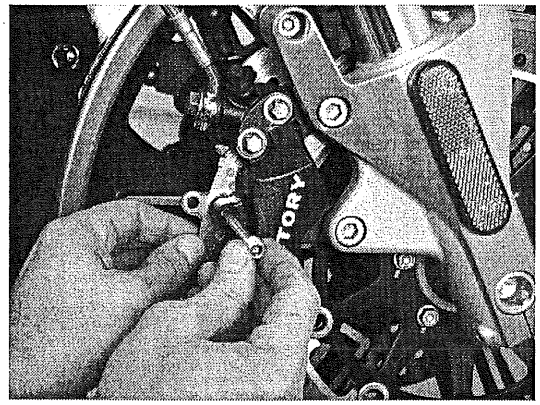

10. Install inner pad with friction material toward disc.

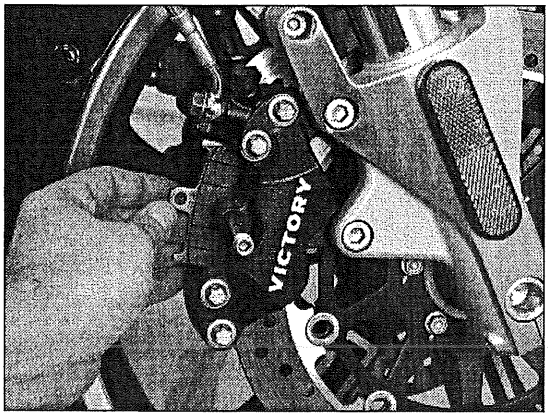

11. Lay spring in place over pads and press on center arm of spring (D) while sliding pin over the top of center arm.

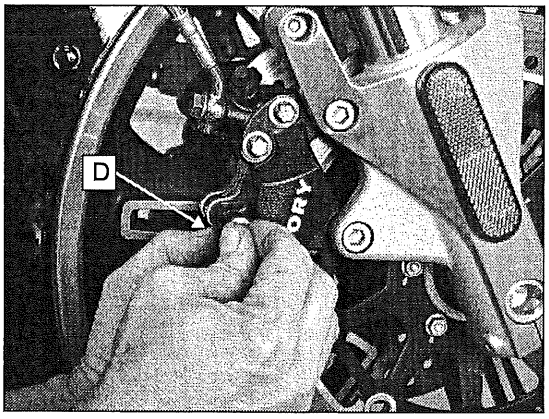

12. Align hole of inner pad and push pin through until threads of pin contact the caliper. Center arm of spring is below pin (E). Torque pin to specification.

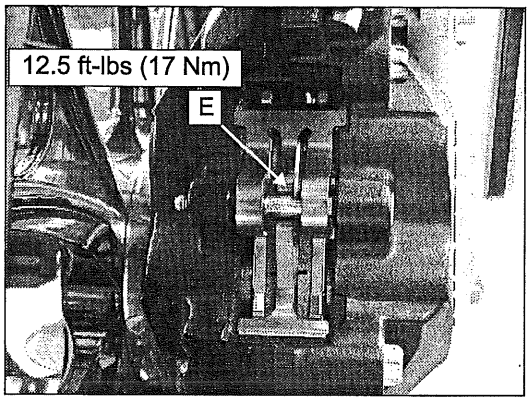

TORQUE
Pad Pin: **13 ft-lb (17 Nm)**

13. Inspect brake fluid in reservoir and set to proper level.
14. Slowly pump lever to set brake pads against disc. Lever should be firm, not spongy. If lever is spongy, inspect pad installation, bleed brake lines and inspect brake disc. If lever is still not firm, refer to Troubleshooting at the end of this chapter.
15. Install reservoir cover. Torque screws to specification.

TORQUE
Brake Reservoir Cover: **13 in-lb (2 Nm)**

16. Operate brake lever several times until lever is firm and pressure can be felt.

⚠ WARNING
After pad installation or any brake system repair, safely elevate wheel, apply and release brake pedal or lever 2-3 times and release. Elevate wheel and verify wheel turns freely without drag. If brake drag is evident, do not operate the motorcycle. Inspect vehicle to determine cause and then repair as necessary.

REAR BRAKE PAD REPLACEMENT

Always replace brake pads as a set. The rear pads can be changed with the caliper installed on the motorcycle.

Refer to Rear Brake Pad Inspection, page 2.18 for rear brake pad inspection.

Do not attempt to remove the caliper from the bracket with bracket installed.

NOTE

Brake fluid will be forced back into the reservoir when pads are pushed back. Remove reservoir cover and monitor fluid level, or attach a hose to the brake bleeder screw (as described in Brake Bleeding on ABS FLUID CHANGE, page 15.21) and open the bleed screw while pushing the pads and pistons back.

1. Push caliper toward wheel to push pad and pistons back and provide clearance for new pad installation.

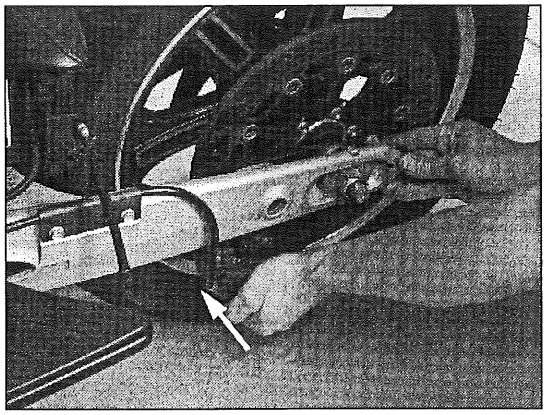

NOTE

The caliper should move freely on the guide pins.

2. Remove pad retaining pin (A).

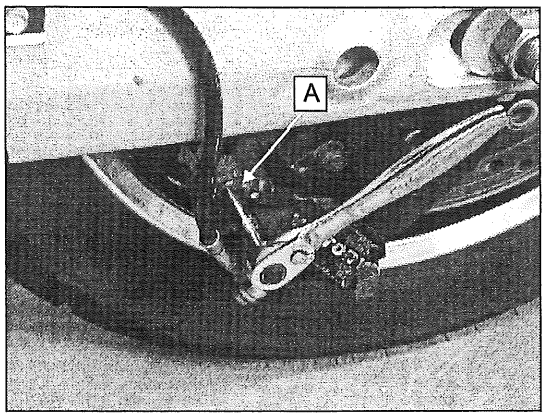

3. Slide pads out front edge of rear caliper.

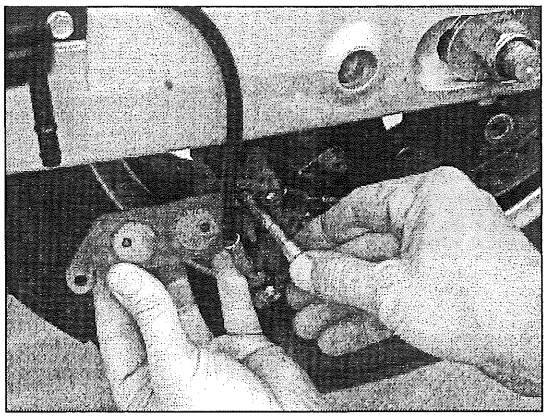

4. Wipe brake disc clean with a shop towel sprayed with Victory Brake Cleaner.
5. Be sure backing plate (B) is properly installed on new inner pad with insulating material (C) between brake pad and plate.

6. Slide pad into place with friction material against disc and engage tab (E) in the back of the caliper. This can be viewed from the right side (through the wheel).

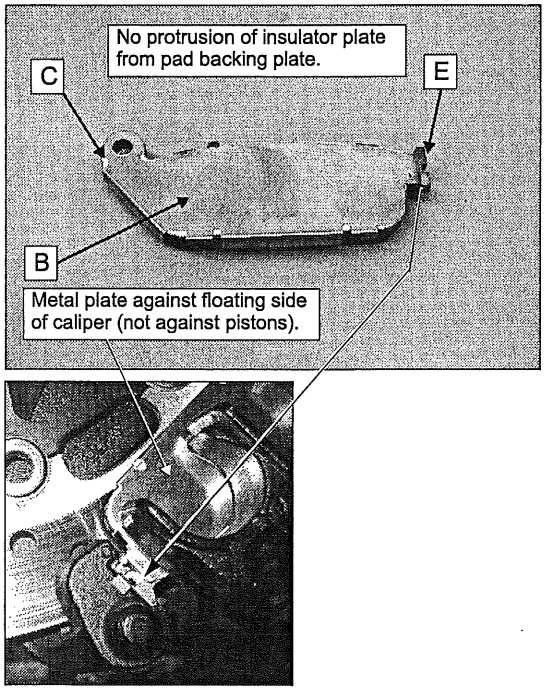

7. Apply Silicone Grease (009-Z00-111) to O-ring on pad retaining pin.
8. Install new outer pad with friction material against disc. Be sure tab is engaged with caliper as for inner pad.

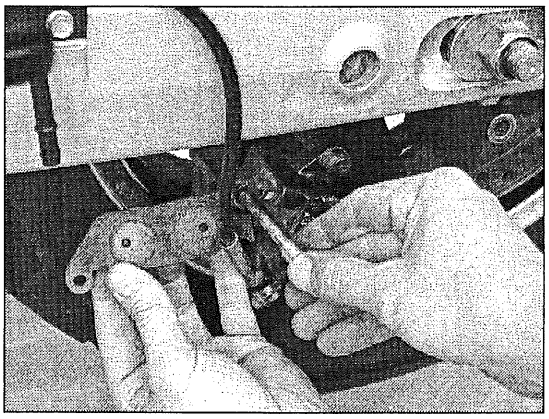

9. Start pin in caliper. Align hole in outer pad (push pad inward against spring pressure) and push pin through.
10. Align hole of inner pad and push pin through until threads of pin contact the caliper.

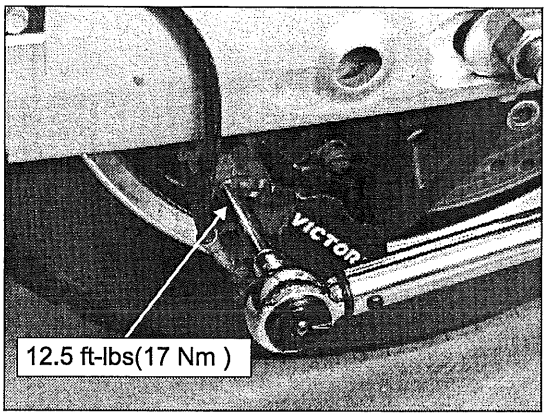

11. Tighten the pin and torque to specification.

TORQUE
Pad Pin: **13 ft-lb (17 Nm)**

12. Inspect fluid level in the reservoir and adjust as necessary (Brake Fluid Replacement & Bleeding Precautions, page 15.20).
13. Pump brake pedal slowly several times to set new pads against disc, until lever is firm and pressure can be felt.
14. Bleed brake system if necessary (ABS FLUID CHANGE, page 15.21).

⚠ WARNING
After pad installation or any brake system repair, safely elevate wheel, apply and release brake pedal or lever 2-3 times and release. Verify wheel turns freely without drag. If rear brake drag is evident, inspect pedal clearance as outlined on Front Brake Pad Inspection, page 2.18. Do not operate the motorcycle if drag is still evident after clearance adjustment. Inspect vehicle to determine cause and repair as necessary.

BRAKE DISC INSPECTION (FRONT & REAR)

1. Visually inspect disc for cracks or damage.
2. Measure brake disc thickness in several locations around disc with a micrometer, and along *wear surface* and compare to specifications found on General Specifications, page 15.4.

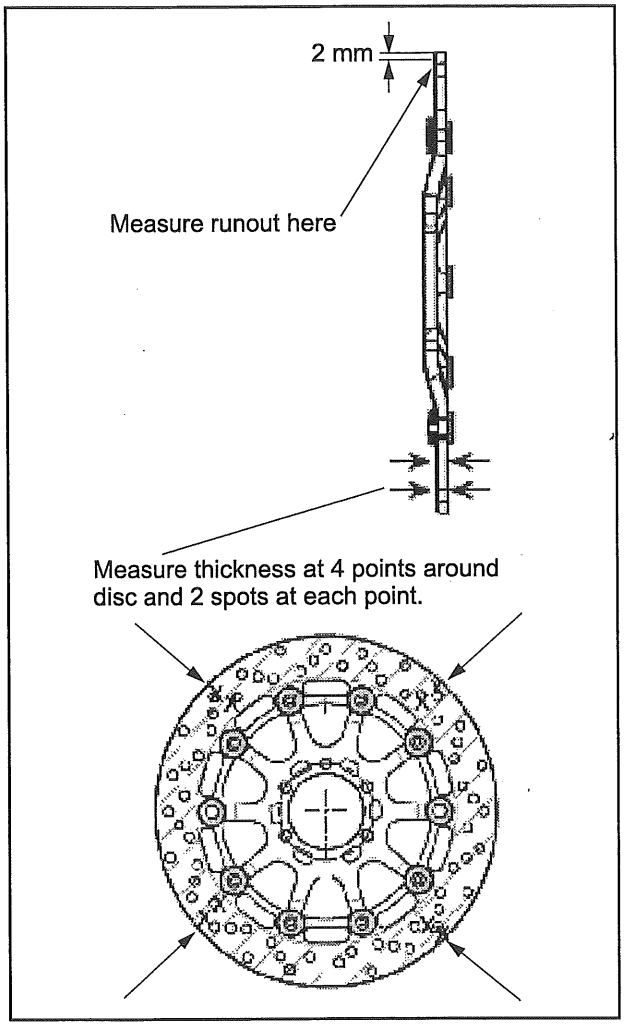

NOTE

Replace the brake disc if any measurement is worn beyond the service limit.

3. With disc mounted to wheel, inspect for runout or warpage with a dial indicator and compare to specifications found on General Specifications, page 15.4. Runout should be measured 2-4mm in from outside edge of disc.
4. If runout is excessive, refer to Troubleshooting at the end of this Chapter. Replace brake disc if dial indicator reading displays excessive brake disc runout and other possible causes have been eliminated.
5. Refer to Brake Disc Removal, page 12.27 for front brake disc removal and installation. Refer to Brake Disc Removal, page 13.15 for rear brake disc removal & installation.

FRONT MASTER CYLINDER SERVICE

NOTICE

Brake fluid and brake cleaners could damage paint, plastics and some rubber compounds. Cover or remove plastic and painted parts before working on the brake system. If brake fluid is spilled on cosmetic surfaces, immediately rinse the area with a mild solution of soap and water until all traces of brake fluid are removed. Be sure master cylinder reservoir is level before removing cover.

NOTE

Replace all rubber parts upon assembly.

1. Clean the master cylinder. Attach a drain hose to caliper bleed screw and place the end in a suitable container. Drain brake fluid from the front brake system (each caliper on dual front disc models) by slowly pumping brake lever.
2. Remove mirror (A).

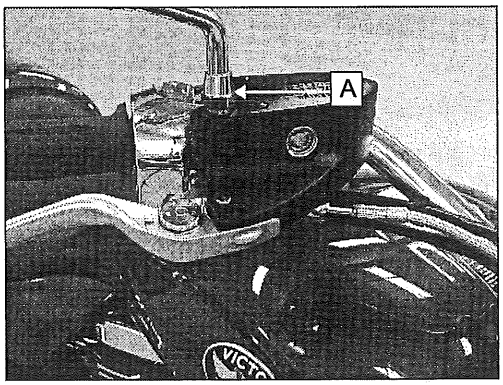

3. Disconnect front brake light switch wires at switch (B).
4. Remove switch (C) and brake lever nut (D), brake lever pivot screw, lever and bushing.
5. Remove brake line from master cylinder (E).

6. Remove screws (F), clamp, and master cylinder.

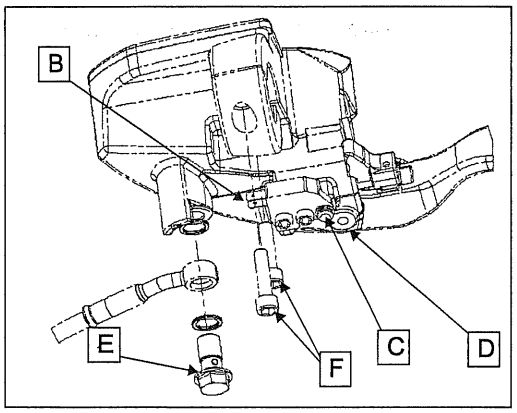

7. Remove reservoir cover and diaphragm.
8. Pull dust boot off piston and out of cylinder bore.
9. Remove snap ring.

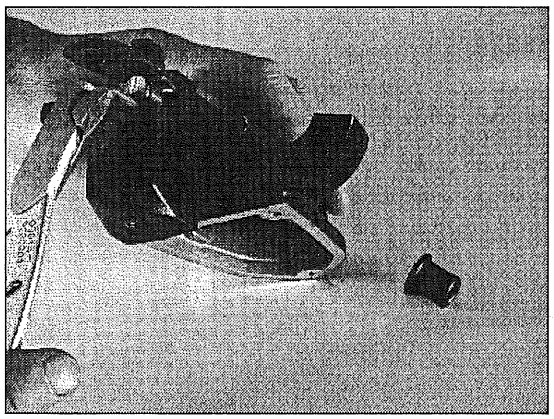

10. Slide piston out with spring. Note spring orientation for assembly of new spring (new parts).

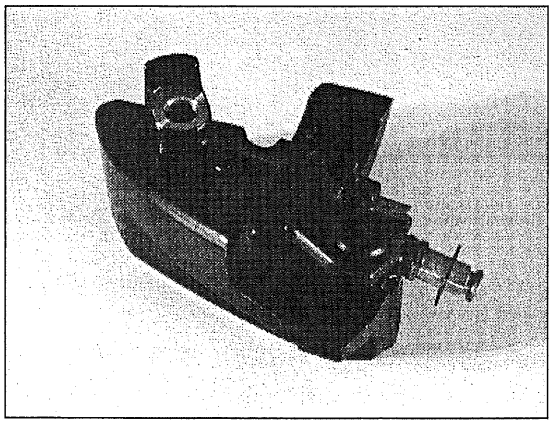

11. Clean master cylinder with isopropyl alcohol and dry with compressed air. DO NOT soak in alcohol for more than 30 seconds. DO NOT aim pressurized air directly at the level sight glass.
12. Inspect bore (G) and chamfer of bore (H) for corrosion, scratches, scoring, or pitting. Replace master cylinder if any of these conditions are evident.

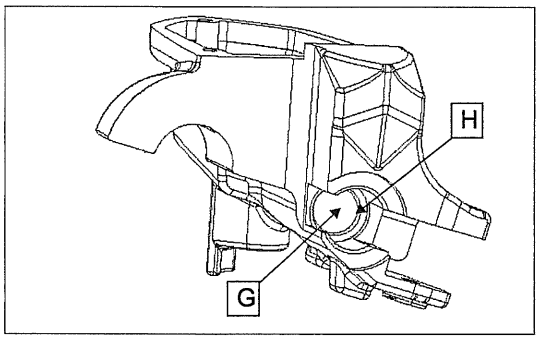

13. Measure the diameter of the bore. Replace master cylinder if worn beyond the service limit.

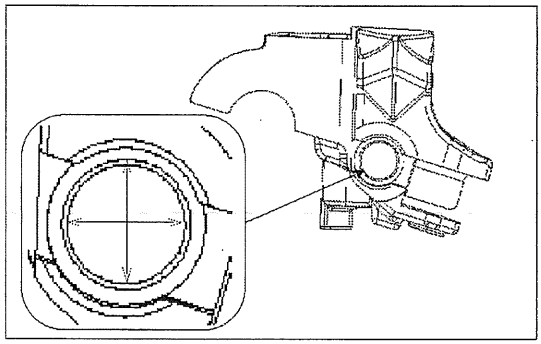

MEASUREMENT
Master Cylinder Bore Diameter **Service Limit: 15.913mm (0.6265")**

14. Measure the diameter of the master cylinder piston in two places as shown below. Replace piston if worn beyond the Service Limit.

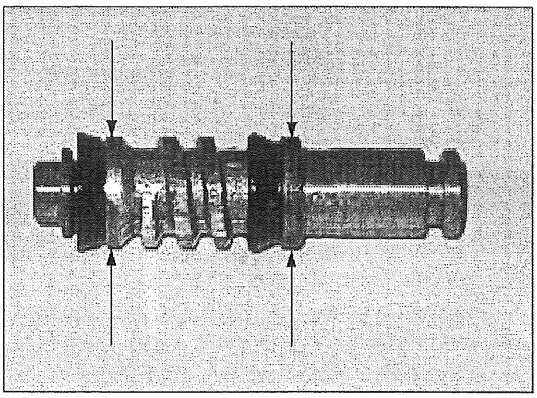

MEASUREMENT
Master Cylinder Piston Diameter **Service Limit: 15.72 mm (0.6189")**

15. Remove deflector (I) from reservoir.

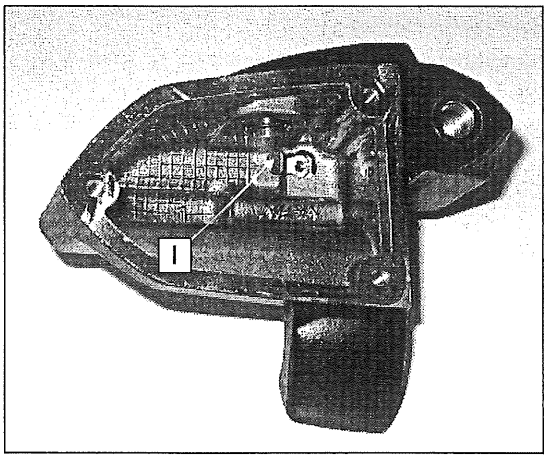

16. Clean the compensating port (J) and supply port (K) with compressed air to be sure they are clean and unobstructed. Re-install the deflector.

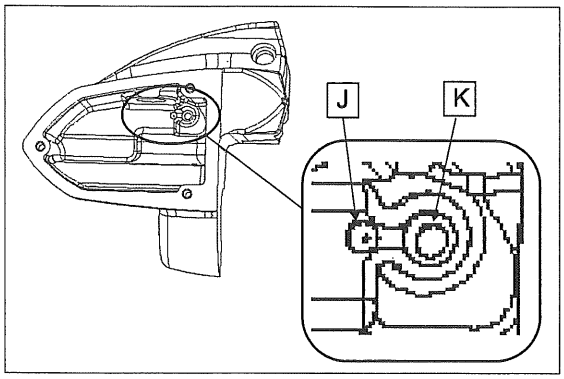

17. Apply a light film of special lubricant from piston kit to each piston seal cup.

18. Assemble spring to new piston assembly as shown with small end to piston. Large diameter of beveled edge on piston seals (L) face toward spring. Install a new retaining ring on end of piston with machined edge (sharpest of the two edges) facing out (M).

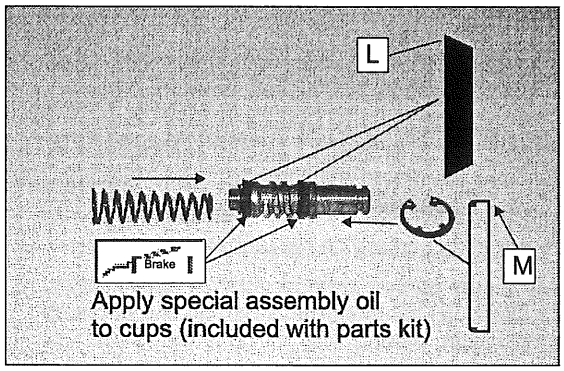

19. Carefully install spring / piston assembly into master cylinder bore. Work the front piston seal carefully past the chamfer and into bore. Use care not to damage or fold the seal when working it past the chamfer.

20. Continue to install the piston until the rear seal is past the chamfer. Push and hold the piston in far enough to allow the retaining ring to be installed.

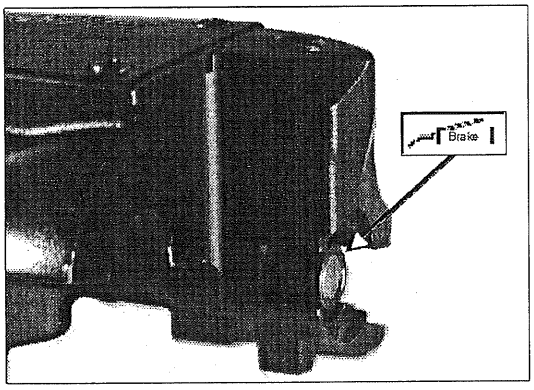

21. Be sure retaining ring is fully seated in the groove.
22. Clean the bore from the retaining ring outward, so the outer edge of the new dust boot adheres properly and will not dislodge from the bore.
23. Install new boot, seating the outer edge fully in the bore and engage outer lip of boot in piston groove.
24. Apply special lubricant from kit to brake lever contact surface.
25. Install master cylinder on handlebar. See Front Master Cylinder Installation, page 15.32.

FRONT MASTER CYLINDER INSTALLATION

Also refer to handlebar illustration on Handlebar Controls: Cross Country Assembly View, page 12.6.

1. Clean mounting surface on handlebar.
2. Loosely install master cylinder, clamp, and screws. Rotate clamp on handlebar until parting line of clamp is aligned with parting line of right bar switch or position so top of reservoir is level with bars in the straight ahead position.
3. Torque rear clamp screw first then torque front screw to specification.

TORQUE
Rear Clamp Screw: **80 in-lb (9 Nm)**

4. Connect brake hose to master cylinder with banjo bolt and new sealing washers. Torque banjo bolt to specification.

TORQUE
Banjo Bolt: **18 ft-lb (25 Nm)**

5. Install brake light switch. Torque screws to specification. Connect switch wires.

TORQUE
Brake Light Switch: **11 in-lb (1 Nm)**

6. Lubricate brake lever bushing with special lubricant from kit and install lever. Torque pivot screw to specification. Hold screw and torque nut to specification.

TORQUE
Pivot Screw: **9 in-lb (1 Nm)** Pivot Nut: **52 in-lb (6 Nm)**

7. Install mirror, adjust to proper angle, hold in position and tighten nut securely.
8. Turn handlebars until top of reservoir is level. Fill reservoir with Victory DOT 4 Brake Fluid and bleed the front hydraulic brake system (see ABS FLUID CHANGE, page 15.21).

⚠ WARNING
After pad installation or any brake system repair, safely elevate the wheel, apply and release the brake pedal or lever 2-3 times and release. Verify the wheel turns freely without drag. If brake drag is evident, do not operate the motorcycle. Inspect the vehicle to determine the cause and then repair as necessary.

FRONT CALIPER SERVICE

NOTICE: Brake fluid and brake cleaners will damage paint, plastics and some rubber compounds. Cover or remove plastic and painted parts before working on the brake system. If brake fluid is spilled on cosmetic surfaces, immediately rinse the area with a mild solution of soap and water until all traces of brake fluid are removed. Make sure the master cylinder reservoir being worked on is level before removing the cap. Replace all rubber parts upon assembly.

NOTE

Replace all rubber parts upon assembly. Keep parts in order for assembly. *The top and bottom pistons in the caliper are not the same size.*

1. Remove banjo bolt (A), sealing washers, and brake hose from caliper assembly and allow it to drain into a container.
2. Remove front caliper mounting bolts (B) and remove the caliper.

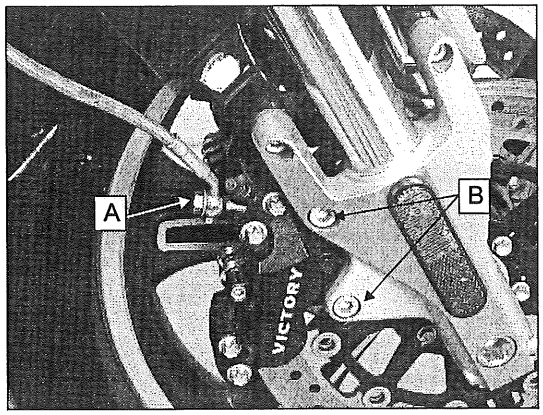

3. Cover the end of brake line(s) to prevent debris from entering.
4. Cover the brake hose connection on the caliper and clean the outer surfaces of caliper assembly with Victory brake cleaner or isopropyl alcohol. Dry with compressed air.
5. Remove brake pads. **Pads contaminated with oil or grease must be replaced as a set.**

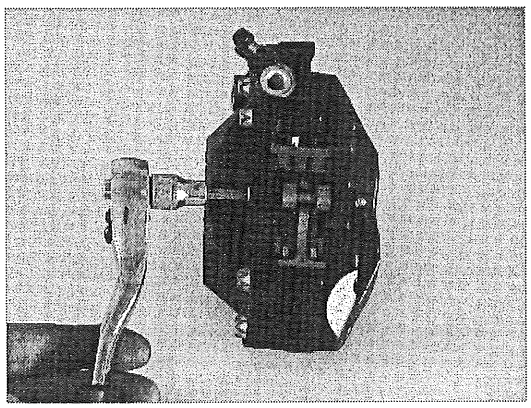

6. Remove the 4 caliper body bolts (A) using
7. an E12 reverse Torx socket (B).

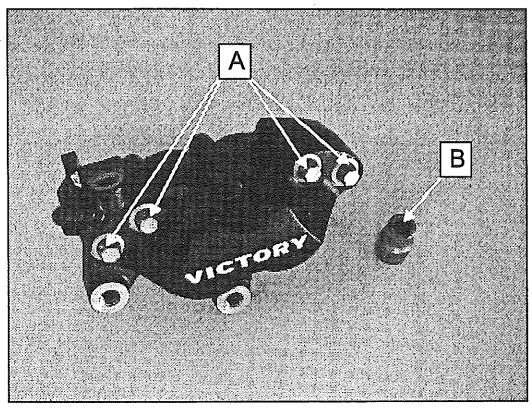

8. Separate the halves. Note the O-ring (C) used to seal the fluid passage. This O-ring must be replace along with all rubber parts during assembly.

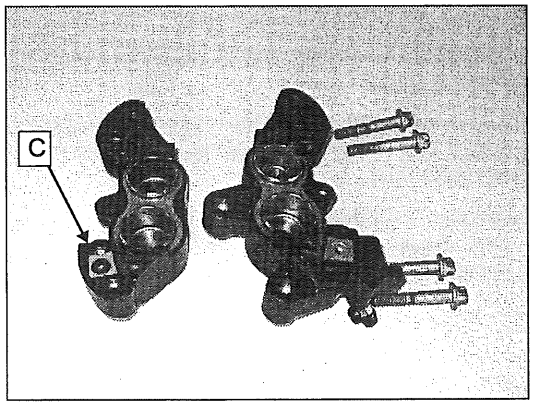

9. Keep parts in order for assembly in the same bore. *Top and bottom pistons (in each caliper half) have different diameters.*

15

10. Remove each piston with a caliper piston pliers. If a caliper piston pliers is not available, wrap the caliper in a shop towel and apply short bursts of compressed air through the brake line hole and through the transfer passage to force the pistons out of the bore.

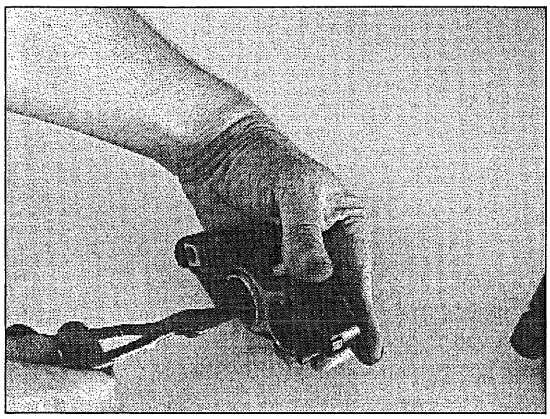

11. Remove dust seals and piston seals. Use care not to damage the seal bores.
12. Clean all parts thoroughly with isopropyl alcohol. Be sure the seal bores are clean, removing all traces of dirt or dried brake fluid.
13. Clean piston seal and dust seal bores (D) to remove residue that could cause the pistons to stick, resulting in brake drag.

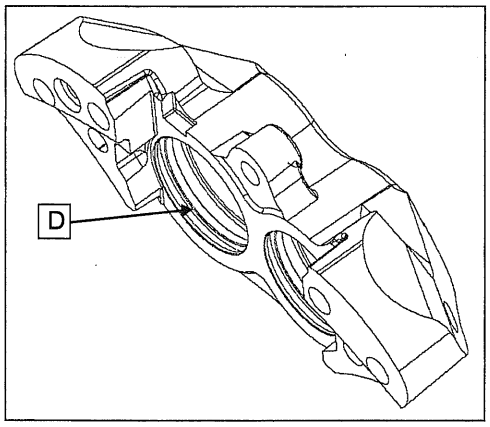

14. Inspect each piston bore for corrosion, scratches, scoring, or pitting. Replace caliper if any of these conditions are evident.
15. Measure the diameter of each caliper bore. Replace caliper if any is worn beyond the service limit.

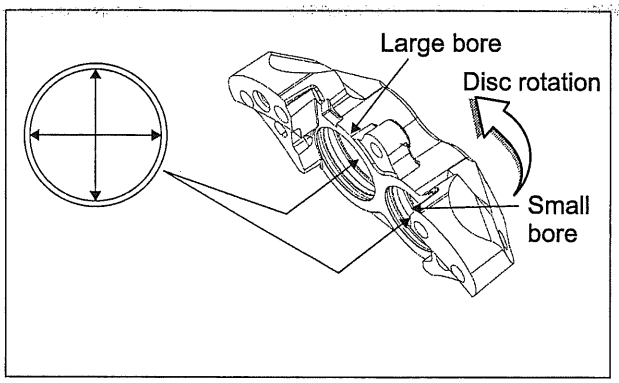

MEASUREMENT
Front Caliper Bore Diameter **Std Bore 30.23 mm: Limit = 30.31 mm (1.1933")** **Std Bore 33.96 mm: Limit = 34.04 mm (1.3401")**

16. Measure the outside diameter of each piston in two spots 90° apart, 5mm from outer edge. Repeat measurement 5mm from inner edge. Replace piston if worn beyond service limit at any measuring point.

MEASUREMENT
Front Caliper Piston Outside Diameter **Std Size 30.15 mm: Limit = 30.09 mm (1.1846")** **Std Size 33.91 mm: Limit = 33.85 mm (1.3327")**

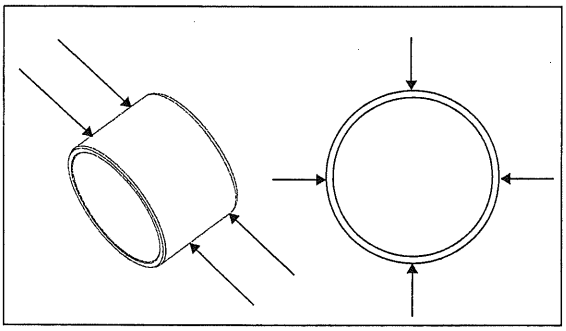

NOTE
Install all new rubber parts during assembly. Do not reuse old seals or boots.

17. Apply special lubricant from service kit to new piston seals and dust seals.

18. Apply special assembly oil (included in kit) to outer surface of all pistons.
19. Install piston seals and dust seals in caliper body.
20. Install pistons in their respective bores.

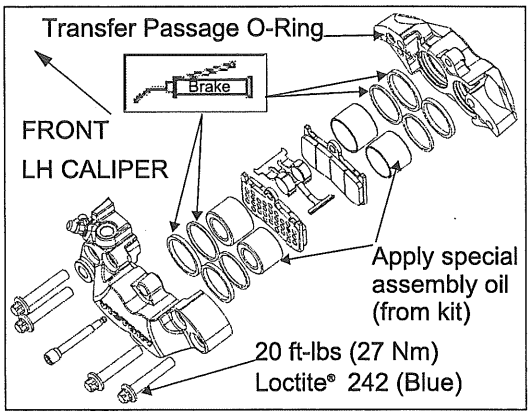

21. Clean threads of each caliper body bolt. Be sure threads are free from any oil, grease, or brake fluid. Apply a few drops of Loctite 242 (Blue) non permanent locking agent to the threads of each bolt.
22. Install a new O-ring on fluid transfer passage, assemble halves of caliper and start (4) bolts while holding pressure on halves to keep O-ring in place.
23. Evenly tighten bolts by hand until halves are secured. Torque bolts to specification.

TORQUE
Caliper Bolts: **20 ft-lb (27 Nm)**

24. Install brake pads. Torque pin to specification.

TORQUE
Pad Pin: **13 ft-lb (17 Nm)**

FRONT CALIPER INSTALLATION

1. Clean mounting surfaces of caliper and fork leg.
2. Apply Victory brake cleaner or isopropyl alcohol to a clean shop towel and wipe brake disc(s) clean.
3. Separate brake pads and install caliper assembly over brake disc.
4. Install caliper mounting bolts. Torque to specification.

TORQUE
Caliper Mounting Bolts: **31 ft-lb (42 Nm)**

5. Connect brake hose to caliper with banjo bolt and new sealing washers.
6. Fill and bleed the front brake hydraulic system (Brake Fluid Replacement & Bleeding Precautions, page 15.20).

⚠ WARNING
After pad installation or brake system repair, safely elevate wheel. Apply and release brake pedal or lever 2-3 times and release. Verify wheel turns freely without drag. If brake drag is evident, do not operate the motorcycle. Inspect vehicle to determine cause and then repair as necessary

REAR MASTER CYLINDER SERVICE

Brake fluid and brake cleaners will damage paint, plastics and some rubber compounds. Cover or remove plastic and painted parts before working on the brake system. If brake fluid is spilled on cosmetic surfaces, immediately rinse the area with a mild solution of soap and water until all traces of brake fluid are removed. Make sure the master cylinder reservoir being worked on is level before removing the cap.

NOTE
Replace all rubber parts upon assembly.

1. To reduce spills when lines are disconnected, draw fluid from master cylinder reservoir with a clean syringe or pump fluid from system through the brake caliper bleed screw (see brake bleeding procedure Brake Fluid Replacement & Bleeding Precautions, page 15.20).
2. Remove pushrod clevis pin (A) and reservoir mount screw (B).
3. Loosen footrest support bolts to access master cylinder mounting bolts (C) and remove master cylinder.

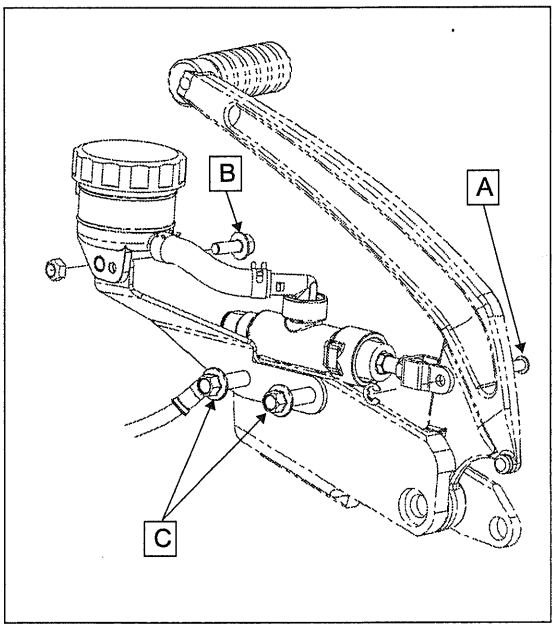

4. Remove reservoir hose clamps at master cylinder and disconnect fluid supply hose.
5. Remove brake line banjo bolt, sealing washers, and brake line from master cylinder.
6. Compress pushrod and remove retaining ring. Slide the assembly out of master cylinder.

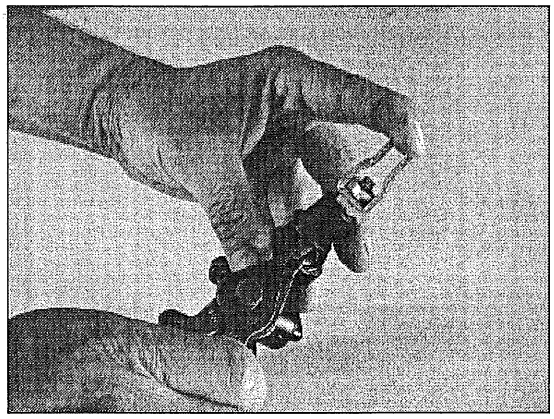

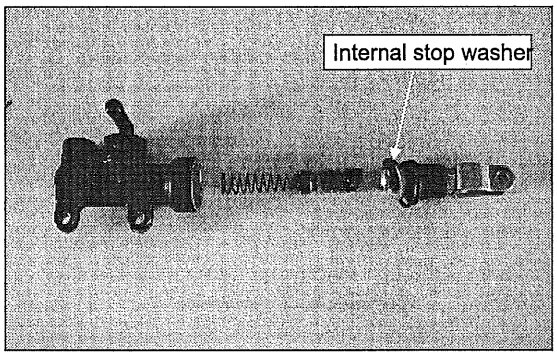

7. Pull boot back from fluid supply fitting and remove retaining ring.

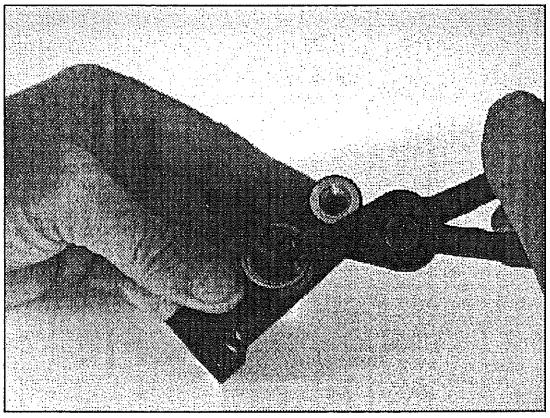

8. Pull fitting from master cylinder with a twisting motion.

9. Inspect cylinder bore (D) and chamfer (E) on the front of the bore for corrosion, scratches, scoring, or pitting. Replace master cylinder if any of these conditions are evident.

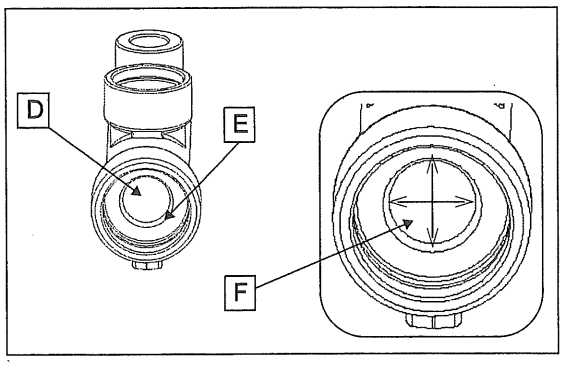

10. Measure the bore diameter (F, above). Replace if worn beyond the service limit.

MEASUREMENT
Master Cylinder Bore Diameter **Service Limit: 12.743 mm (0.5017")**

11. Clean compensating port (G) and supply port (H) with compressed air to be sure they are clean and unobstructed.

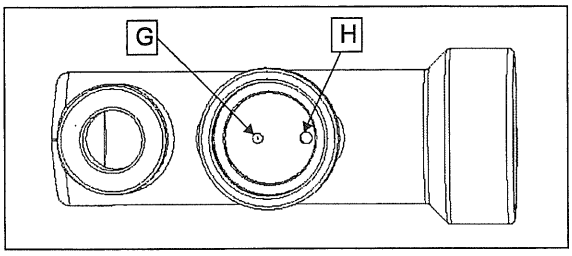

12. Clean all parts with clean Victory DOT 4 brake fluid or isopropyl alcohol.
13. Replace ALL RUBBER PARTS with new.
14. DUST BOOT REPLACEMENT
    Measure the length of the pushrod assembly as shown below or count exposed threads above the nut inside the clevis prior to disassembly so pushrod length can be returned to an approximate adjustment after installing the dust boot.
    Pedal free play (clearance) must be inspected and adjusted before operating the vehicle.

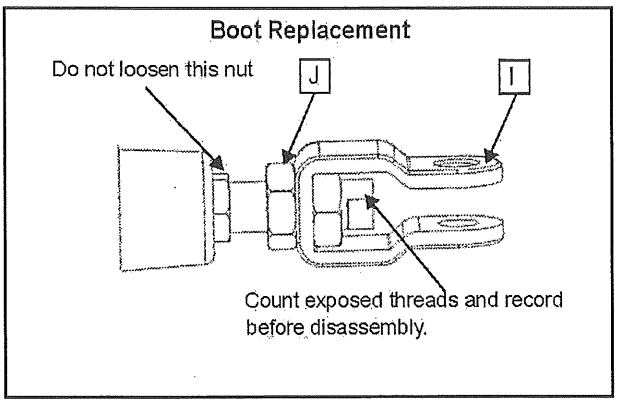

15. Hold clevis (I) and loosen lock nut (J) with a 12mm wrench (turn lock nut *clockwise* as viewed from the clevis end).

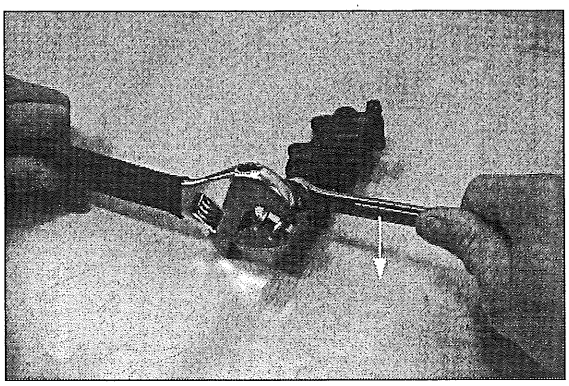

16. Rotate clevis counterclockwise to remove it from the pushrod with the adjuster nut inside.
17. Remove lock nut from pushrod and remove old boot.
18. Install new boot and new piston retaining ring, and assemble the clevis.

19. Set the rod length back to the length recorded before disassembly.

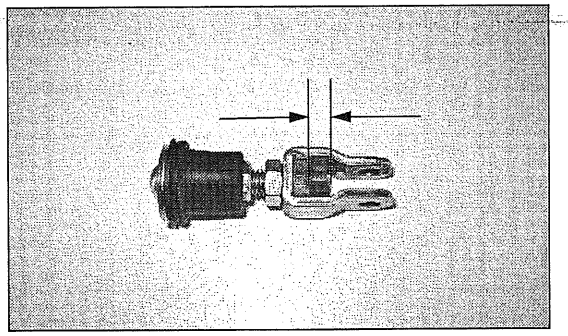

20. Hold clevis and tighten lock nut against it. Torque to specification.

TORQUE
Lock Nut: **13 ft-lb (17 Nm)**

21. Apply Victory DOT 4 brake fluid to the O-ring (K) for the supply fitting and install it in the master cylinder.

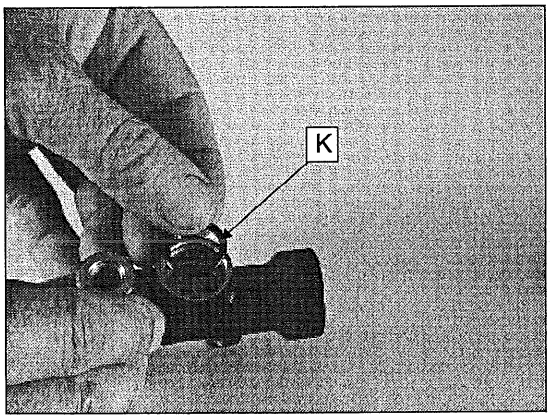

22. Install supply fitting and retaining ring.

23. Press seal (L) into place until seated.

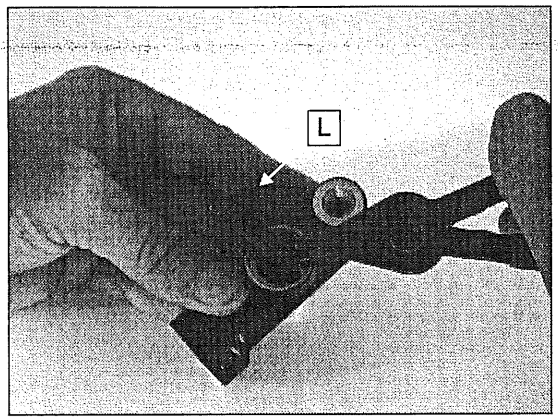

24. Assemble spring to new piston with small end to piston. Large diameter of beveled edge on piston seals (M) face toward spring. Install a new retaining ring on end of piston with machined edge (sharpest of the two edges) facing out (N).

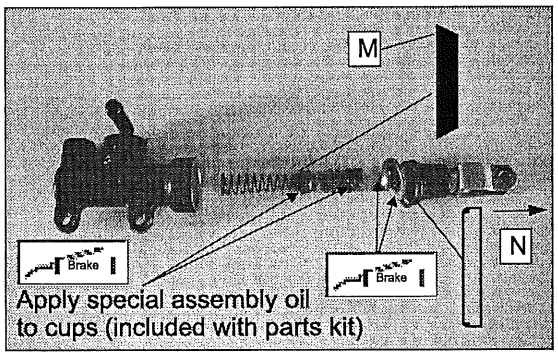

25. Apply special lubricants from service kit to the seal cups, pushrod and backing washer.

26. Carefully install spring / piston assembly into master cylinder bore. Work the front piston seal carefully past the chamfer and into bore. Use care not to damage or fold the seal when working it past the chamfer.

27. Continue to install the piston until the rear seal is past the chamfer. Push and hold the piston in far enough to allow the pushrod assembly and retaining ring to be installed.

28. Align the pushrod and install the retaining ring. Be sure it is fully seated in the groove.

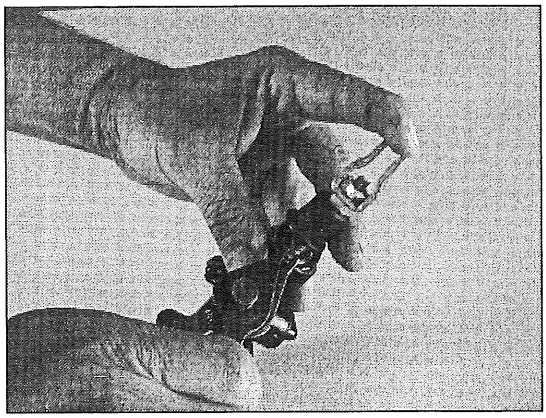

29. Press outer edge of boot into the bore. The outer edge of boot and the bore should be dry so boot does not dislodge.
30. Pull the inner edge of the boot into place on the boot retainer nut on the pushrod.

REAR MASTER CYLINDER INSTALLATION

Also refer to the appropriate Assembly View at the beginning of this chapter.

1. Install master cylinder on footrest support, engaging clevis with brake pedal.
2. Apply a light film of grease to clevis pin and install from outside to inside. Install a new retaining ring on pin.
3. Position pedal return spring behind upper mounting post and install cylinder mounting screws. Torque mounting screws to specification.

TORQUE
Master Cylinder Mounting Screws: **84 in-lb (10 Nm)**

4. Verify the pushrod length adjustment.
5. There must be 1-2 mm (0.040 - 0.080") clearance between pedal (A) and pedal stop (B) when pedal is in fully released position and master cylinder piston is against its internal stop.
6. Re-adjust pushrod length to provide specified clearance if necessary.

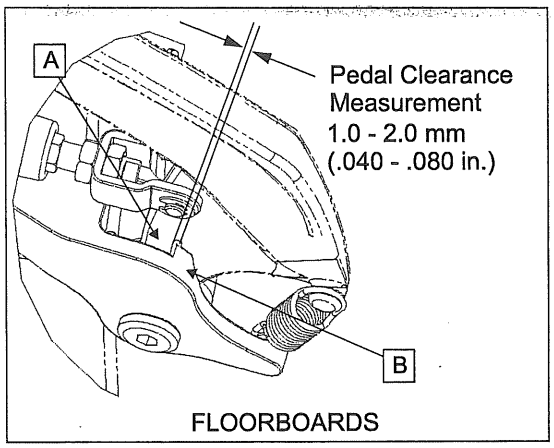

7. Assemble footrest support to the vehicle. Torque bolts to specification.

TORQUE
Footrest: **35 ft-lb (48 Nm)**

8. Attach fluid supply hose to master cylinder supply fitting using new clamps.
9. Install brake line with new sealing washers and torque banjo bolt to specification.

TORQUE
Banjo Bolt: **18 ft-lb (25 Nm)**

10. Fill reservoir with Victory DOT 4 brake fluid and bleed the system as outlined on Brake Fluid Replacement & Bleeding Precautions, page 15.20.

⚠ WARNING

After pad installation or any brake system repair, safely elevate the wheel, apply and release the brake pedal or lever 2-3 times and release. Verify the wheel turns freely without drag. If brake drag is evident, do not operate the motorcycle. Inspect the vehicle to determine the cause and then repair as necessary.

REAR CALIPER SERVICE

1. Remove banjo bolt and sealing washers from rear caliper and allow fluid to drain into a container.
2. Remove rear wheel (see Rear Wheel Removal, page 13.9). Caliper and bracket must be removed as an assembly.
3. Remove pin (A) and brake pads. Note orientation of spring plate (B) for assembly.

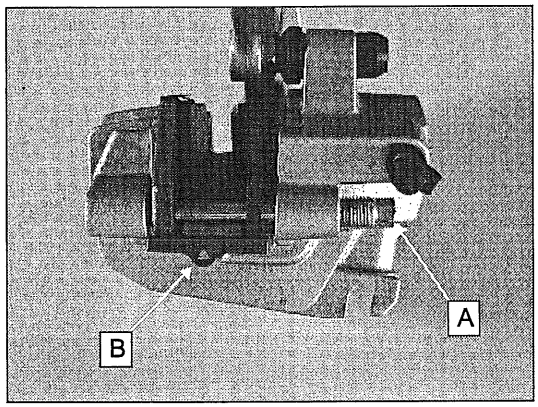

4. Slide caliper bracket off pins and remove spring plate.

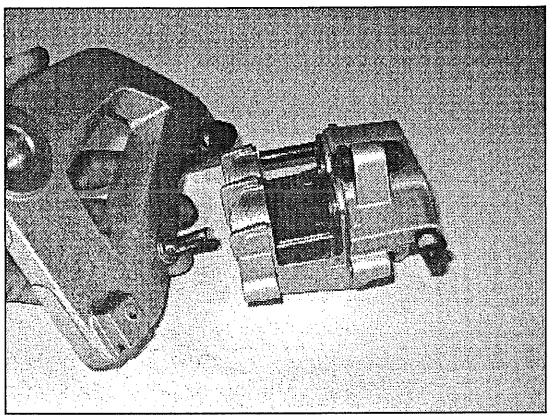

5. Remove caliper pistons. Keep pistons in order for installation in their respective bores.

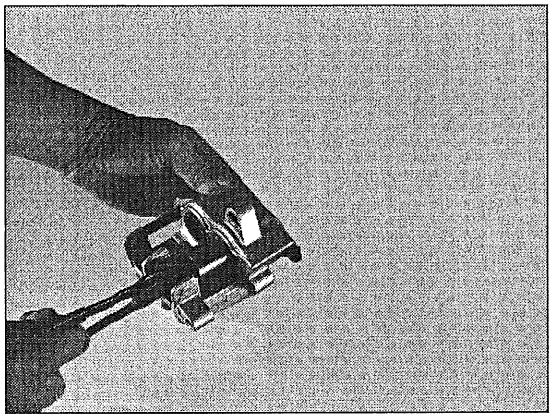

6. Remove dust seals and piston seals. Use care not to damage the seal bores.
7. Clean caliper thoroughly with isopropyl alcohol. Dry with compressed air. Clean seal grooves thoroughly. Any residue left behind in the grooves could cause caliper pistons to stick and result in brake drag.
8. Inspect each bore and surface of each piston for corrosion, scratches, scoring, or pitting. Replace caliper assembly if any of these conditions are evident.

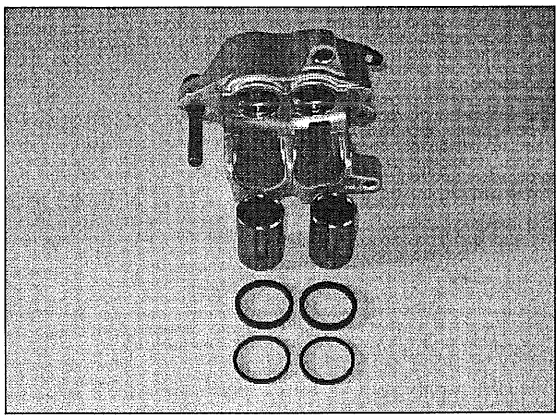

9. Measure diameter of each bore and piston. Replace caliper assembly or parts if worn beyond service limit.

MEASUREMENT
Caliper Piston Bore DiameterService Limit: 27.05 mm (1.0649")

MEASUREMENT
Caliper Piston DiameterService Limit: 26.935 mm (1.0604")

10. Install all new rubber parts during assembly. Do not reuse old seals or boots. Apply special lubricant from service kit to new piston seals and dust seals.
11. Apply special assembly oil to outer surface of all pistons.

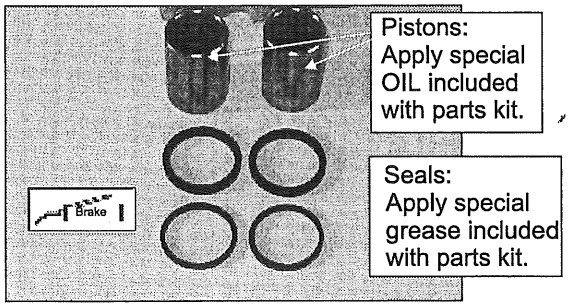

12. Install piston seals and dust seals in caliper body.
13. Install pistons in their respective bore.
14. Replace caliper pin boot (C) on bracket and (D) on caliper. Apply special lubricant from service kit to boots and both pins.

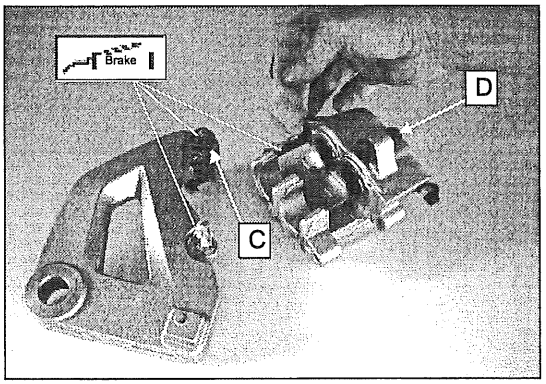

15. Be sure brake pad guide plate is in place on bracket with arrow (E) pointed up.

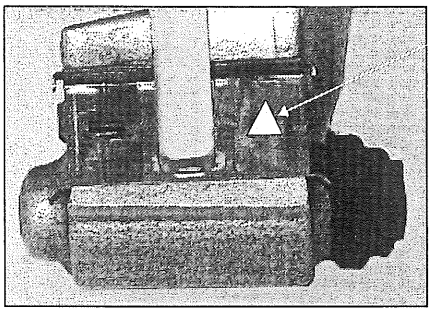

16. Assemble bracket to caliper. Remove excess lubricant.
17. Install spring plate and outer brake pad. Start pad pin through outer pad.
18. Install inner pad with insulator and backing plate.

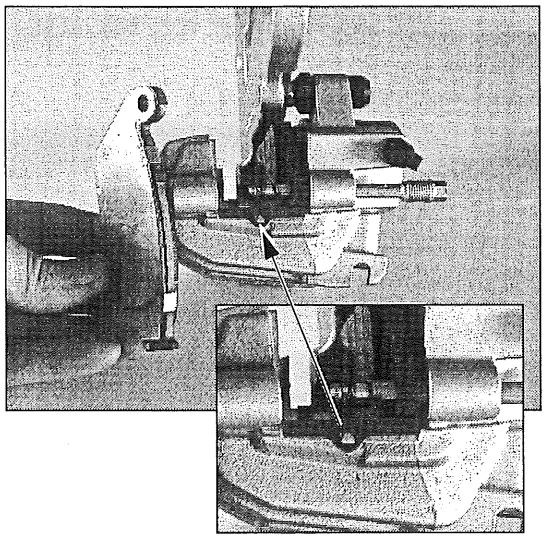

19. Torque brake pad pin to specification.

TORQUE
Pad Pin: **13 ft-lb (17 Nm)**

20. Be sure end tabs of pads are both fully engaged in the heel plate (F) on bracket.

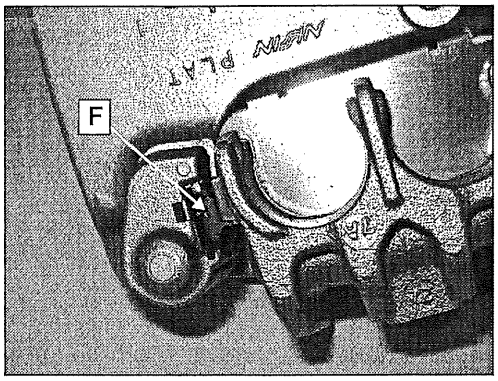

REAR CALIPER INSTALLATION

1. Install caliper and bracket. See Rear Shock And Rocker Inspection, page 13.22.
2. Install brake hose and banjo bolt with new seal washers.
3. Torque banjo bolt to specification.

TORQUE
Banjo Bolt: **18 ft-lb (25 Nm)**

4. Fill and bleed the rear hydraulic brake system. Refer to Brake Fluid Replacement & Bleeding Precautions, page 15.20.

⚠ WARNING
After pad installation or brake system repair, safely elevate wheel, apply and release brake pedal or lever 2-3 times and release. Verify wheel turns freely without drag. If brake drag is evident, do not operate the motorcycle. Inspect vehicle to determine the cause and then repair as necessary.

ABS TROUBLE CODES

ABS CODE NUMBER	DESCRIPTION
C0020	ABS Motor Lock
C1020	ABS Motor Stuck OFF
C1021	ABS Motor Stuck ON
C1022	ABS Pulsar Front
C1023	ABS Pulsar Rear
C1024	ABS Solenoid (RRI) Open or Shorted
C1025	ABS Solenoid (RRO) Open or Shorted
C1026	ABS Solenoid (FFI) Open or Shorted
C1027	ABS Solenoid (FFO) Open or Shorted
C1028	ABS Solenoid (RFI) Open or Shorted
C1029	ABS Solenoid (RFO) Open or Shorted
C1030	ABS Front Wheel Speed Sensor Open or Shorted to Ground
C1031	ABS Front Wheel Speed Signal Failure
C1032	ABS Actuator (Front) Wheel Lock or VSS Failure
C1033	ABS Actuator (Rear) Wheel Lock or VSS Failure
C1034	ABS Failsafe Relay Fault
C1036	ABS Rear Wheel Speed Sensor Open or Shorted to Ground
C1037	ABS Rear Wheel Speed Sensor Signal Failure
C1038	ABS Source Voltage Low
C1039	ABS Source Voltage High
C1040	ABS Tire Size Mismatch
C1041	ABS Module Fault
C1042	ABS Incomplete Evacuation and Fill
C1045	Trip Sudden Deceleration - Open / Short

TROUBLESHOOTING

BRAKE SYSTEM TROUBLESHOOTING

PROBLEM	SYMPTOM AND/OR POSSIBLE CAUSE	POSSIBLE REPAIR
Weak Brakes or Erratic Braking Action	Fluid Leakage (External)	Repair or Replace Leaking Component
	Fluid Leakage (Internal of Master Cylinder)	Replace Master Cylinder
	Worn Pads	Replace Brake Pads
	Oil Contamination of Brake Pads and/or Brake Disc	Pads Must Be Replaced. Disc May Be Cleaned.
	Air In System	Bleed Air From System
	Low Brake Fluid Level In Reservoir	Fill Reservoir, Bleed Brakes, Top Off Fluid Level.
	Excessive Brake Disc Runout	Replace Brake Disc.
	Worn or Damaged Wheel Bearings	Replace Wheel Bearings.
	Loose Front Axle Nut or Clamps or Loose Rear Axle	Torque Correctly, See Chapter 12 & 13
	Caliper Mount Surface Uneven Or Misaligned; Missing or Damaged Fasteners	Inspect / Repair
	Clogged or Restricted Hydraulic Line	Replace Line(s)
	Caliper Bracket Misaligned, Bent or Distorted	Replace Bracket
	Loose Brake Disc	Install New Screws. Torque to Specification
	Brake Pads Glazed	Replace Pads. Avoid Needless Heavy Braking for 100-200 miles (Burnish New Brake Pads).
Poor Brakes or No Brakes When First Applied. Brake Lever Pressure Present If Lever Is "Pumped".	Air In System	Bleed Air From System
	Low Brake Fluid Level In Reservoir	Fill Reservoir, Bleed Brakes, Top Off Fluid Level.
	Brake Disc is Bent or Warped	Replace Brake Disc
	Caliper Misalignment	Determine Cause and Correct
	External Leak	Repair or Replace Damaged Component
	Internal Leak (master cylinder)	Repair or Replace Master Cylinder
	Faulty Brake Hose	Inspect for Bulges / Replace
Brake Pedal or Brake Lever Pulsates	Brake Disc Bent or Warped	Replace Brake Disc
	Mounting Surface of Brake Disc Uneven / Disc Loose	Repair or Replace as Necessary
	Caliper Mount Surface Uneven Or Misaligned; Missing or Damaged Fasteners	Repair or Replace as Necessary
Excessive Lever or Pedal Travel / Spongy Brake Feel.	Air in System	Bleed Air From System
	Loose Mounting Hardware	Repair as Necessary

PROBLEM	SYMPTOM AND/OR POSSIBLE CAUSE	POSSIBLE REPAIR
	Low Brake Fluid Level In Reservoir	Fill Reservoir, Bleed Brakes, Top Off Fluid Level.
	Incorrect Brake Fluid Used	Flush System and Replace With Correct Fluid
	See "Weak / Erratic Brakes" and Poor Brakes" possible causes above.	
Fluid Leakage	Loose Banjo Fittings	Tighten to Specified Torque
	Damaged Banjo Fitting Sealing Washers	Replace
	Cracked / Damaged Hose	Replace
	Worn Master Cylinder Piston, Caliper Piston(s) or Seals	Repair / Replace Master Cylinder or Wheel Caliper.
	Diaphragm (master Cylinder reservoir) Leaking	Inspect / Replace Cover, Cap, Diaphragm or Reservoir as Required
	Fluid level too high (new brake pads installed without removing added fluid)	Correct fluid level
Brakes Drag Excessively or Self-Apply (Brakes Overheat)	Reservoir Over Filled	Adjust Level As Necessary
	Brake Pedal Or Lever Not Returning Completely To Rest Position	Inspect Linkage, Pivots and Mechanism For Cause Of Binding Or Restricted Movement;
	Inadequate Freeplay	Measure Pedal Clearance / Adjust
	Compensating Port Plugged	Repair or Replace Master Cylinder
	Internal Corrosion of Components (Master Cylinder / Caliper)	Replace Damaged Component
	Rear Caliper: Corrosion of Sliding Parts, Bent or Damaged Parts	Repair or Replace As Necessary
	Contaminated Brake Fluid	Flush System, Install Correct Fluid
	Caliper Pistons Sticking	Repair / Replace Caliper (Corrosion / Buildup of Residue In Caliper Piston Seal Grooves)
	Rider Error (Operator Riding Brakes)	Educate Operator
Brake Squeal/ Squeak	If noise is minor and inconsistent, some brake squeak / squeal is characteristic of disc brakes and usually caused by dust / dirt on pads and / or brake disc.	Apply non oil-based solvent (such as Victory Brake Cleaner or isopropyl alcohol) to a clean shop towel and wipe dust / dirt from brake disc.
	Pad Not Secure in Caliper	Repair as Necessary. Inspect Pad Installation
	Aftermarket (not genuine Victory) Parts	Install Genuine Victory Parts
	Worn or Damaged Wheel Bearing(s)	Replace
	Worn Pads / Disc	Replace

ABS SYSTEM TROUBLESHOOTING

ABS System Troubleshooting

PROBLEM	SYMPTOM AND/OR POSSIBLE CAUSE	POSSIBLE REPAIR
ABS light on at all times	Blown Fuse (ABS Fuse Open)	Replace Fuse; Inspect wiring for cause
	System Fault (Fault Code Active)	Connect Digital Wrench - View Code(s)
	Sensor Fault; Loose sensor; Damaged sensor or pulse ring. Improperly assembled fork, brake, wheel, or axle.	Inspect wheel speed sensor / pulse ring for debris or damage. Inspect sensor mounting. Inspect front fork, both brake calipers, wheels and axles for proper assembly, and wheel bearings. Inspect all ABS wiring connections.
ABS light on intermittently	Wire Connection Fault	Inspect connector at ABS module for loose, broken, or corroded wiring or connector pins. Check power supply (fuses) and ground.
	Sensor Fault; Loose sensor; Damaged sensor or pulse ring.	Inspect wheel speed sensor / pulse ring for debris or damage. Inspect sensor mount, ABS wiring connections, and wheel bearings.
ABS Noise When Active	Transmission or Drive Line Noise	Some drive line noise may be evident and is normal depending on conditions / road surfaces. Inspect brake pads, brake discs, caliper mounts, tire pressure, tread wear, and tire type. Pulsation at lever or pedal normal when ABS active.
ABS Pulsation at Lever or Pedal	Normal System Operation	Pulsation at lever or pedal is normal when ABS is active due to feedback in the brake lines from pressure modulation at the ABS module. If pulsation can be felt during normal system braking (non-ABS active braking) inspect the brake system as you would for a non-ABS equipped vehicle (brake pads, brake discs, caliper mounts, tire pressure, tread wear, and tire type, etc.)
ABS Poor Performance	System not properly bled (air in system).	Bleed system properly as described onABS FLUID CHANGE, page 15.21 and perform Front Brake Lever Reserve test on Brake Lever Reserve Inspection, page 15.23 to verify all air is purged from the system. Inspect brake system components (discs, pads, etc.)
ABS Light On After Rear Wheel Spin	Rear wheel loss of traction was initiated below 6 mph (10 kph) and exceeded maximum time allowance parameter of system.	Careless or reckless driving not recommended. Bring motorcycle to a safe stop. Cycle ignition key OFF / ON to reset system. Light should go off when vehicle speed exceeds 6 mph / 10 kph.
	Rear wheel loss of traction initiated above 6 mph (10 kph).	Careless or reckless driving not recommended. System Fault Code logged immediately due to wheel speed differential when ABS is active (above 6 mph / 10 kph). Bring motorcycle to a safe stop. Cycle ignition key OFF / ON to reset system. Light should go off when vehicle speed exceeds 6 mph / 10 kph.

NOTES

CHAPTER 16
CHARGING SYSTEM

SPECIFICATIONS 16.2
GENERAL 16.2
CHARGING SYSTEM & ALTERNATOR 16.2
CHARGING SYSTEM FASTENER TORQUE 16.2
BATTERY BOX AND ATTACHMENTS 16.3
FASTENER TORQUE REFERENCE 16.3
REGULATOR / RECTIFIER 16.4
IMPORTANT INFORMATION 16.5
GENERAL 16.5
BATTERY SAFETY 16.5
SPECIAL TOOLS 16.6
BATTERY 16.7
BATTERY REMOVAL 16.7
BATTERY CHARGING - NEW BATTERY 16.7
BATTERY CHARGING - GENERAL 16.7
DIAGNOSTICS 16.8
CHARGING SYSTEM TROUBLESHOOTING 16.8
BATTERY LOAD TEST 16.9
CURRENT DRAW INSPECTION (KEY OFF) 16.9
BATTERY TESTING 16.10
BATTERY CONDUCTANCE ANALYZER 16.10
REGULATED VOLTAGE / AMPERAGE OUTPUT INSPECTION 16.10
STATOR NO-LOAD AC VOLTAGE OUTPUT 16.11
STATOR RESISTANCE INSPECTION 16.12
STATOR WINDINGS TO GROUND INSPECTION 16.13
VOLTAGE DROP: RECTIFIER / REGULATOR TO BATTERY(+) 16.13
RECTIFIER / REGULATOR CONNECTOR INSPECTION 16.14
DIODE LEAKAGE TEST 16.14
REGULATOR / RECTIFIER TEST 16.15
RECTIFIER / REGULATOR REPLACEMENT 16.16
STATOR REMOVAL 16.18
STATOR INSTALLATION 16.18
FLYWHEEL REMOVAL 16.18

SPECIFICATIONS

GENERAL

ITEM		SPECIFICATIONS
Electrical (General)	Starting System	Electric
	Charging System	Permanent Magnet / 3 Phase / Full Wave Rectification
	Regulator/ Rectifier	Solid State Three Phase Voltage Regulator/ Rectifier
	Lighting System	12 V DC

CHARGING SYSTEM & ALTERNATOR

ITEM		SPECIFICATIONS
Alternator No Load AC Output @ Idle (Minimum, Engine Cool)		17.5-21 V AC @ Idle
Alternator No Load AC Output @ 2000 RPM (Minimum)		44 V AC @ 2000 RPM
Stator Coil Resistance (@ 21°C / 70°F) (stator Black wire to other Black wire)		Less than 1 ohm
Stator Coil Resistance To Ground (each stator Black wire to ground)		Ω (no continuity)
Regulator/Rectifier Regulated Voltage		14.3-14.7 V DC
Alternator Output (Amps / Watts)		48 A 13VDC @ 3500 RPM
Battery (P/N 4011374)	Type	Yuasa: YTX20HL-BS
	Voltage	12 Volts DC
	Nominal Capacity @ 10 Hr Rate	18 AH
	Recommended Battery Charging Current	STD: 1.85 A for 5 to 10 hrs
	Cold Cranking Amp Rating	310

CHARGING SYSTEM FASTENER TORQUE

DESCRIPTION	TORQUE NM	TORQUE FT-LBS (IN-LB)
Battery Cover Screw	10 Nm	(85 in-lbs)
Battery Terminal Screws	4.5 Nm	(40 in-lbs)
Circuit Breaker Terminal Nuts	2.8 Nm	(25 in-lbs)
Flywheel (Rotor) Bolt	102 Nm	75 ft-lbs
Primary Cover Screws	13 Nm	(115 in-lbs)
Regulator/ Rectifier to Bracket	10 Nm	(85 in-lbs)
Regulator/ Rectifier Bracket to Crankcase	10 Nm	(85 in-lbs)
Stator Mounting Screws	11 Nm	(100 in-lbs) Loctite™ 242

BATTERY BOX AND ATTACHMENTS

FASTENER TORQUE REFERENCE

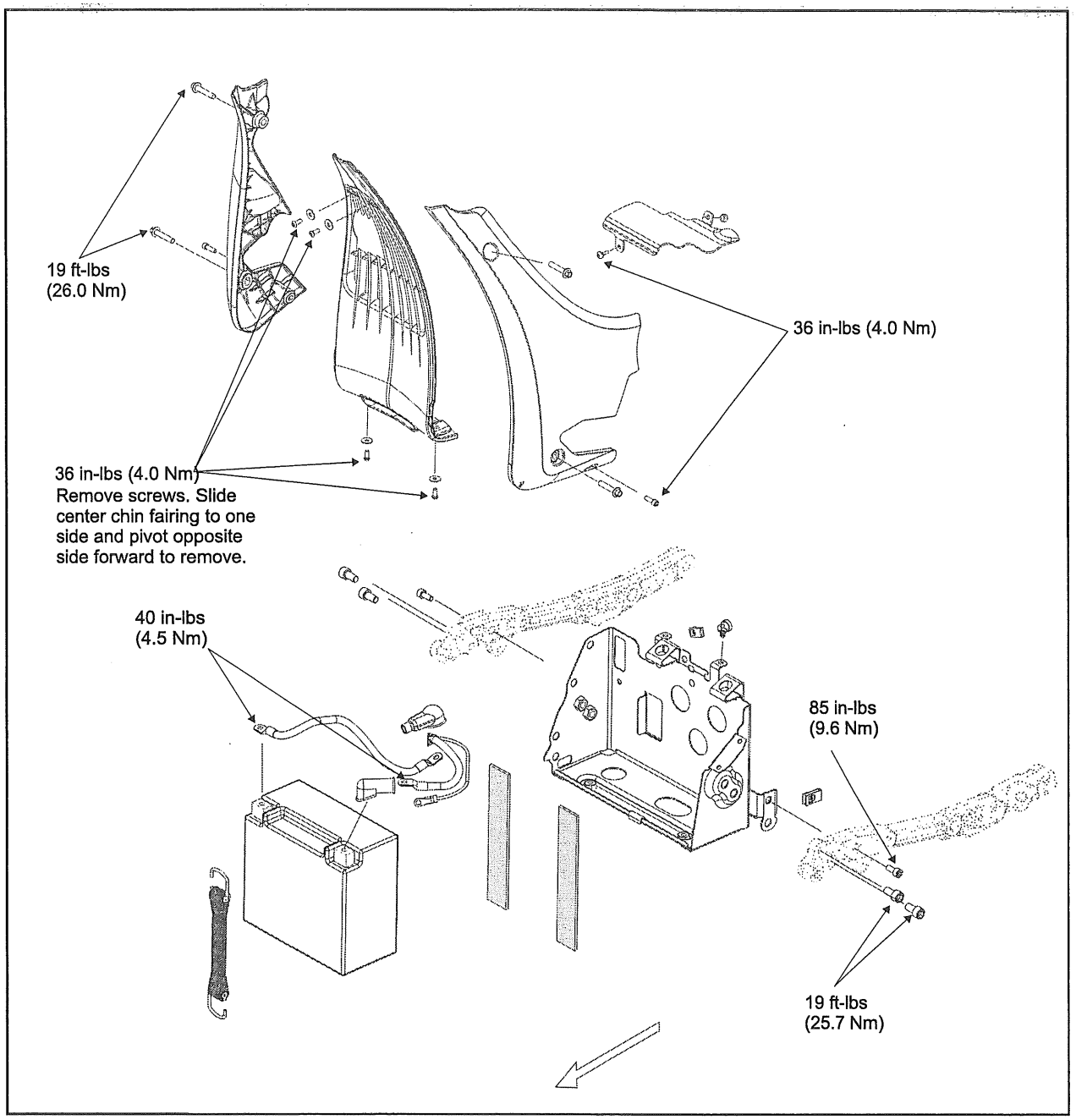

16

REGULATOR / RECTIFIER

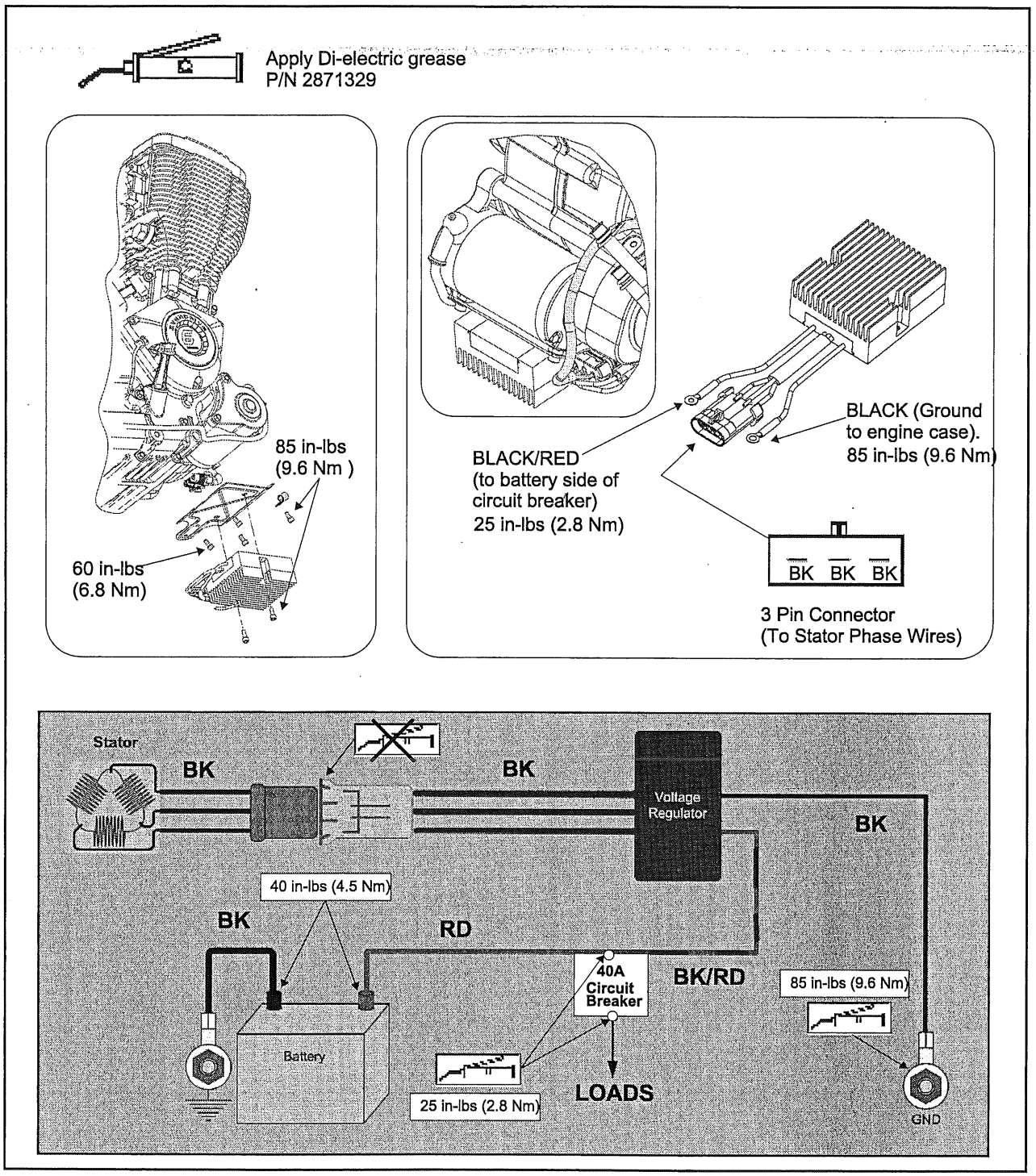

IMPORTANT INFORMATION

GENERAL

All electrical system and component service can be performed with the engine in the frame.

CAUTION

Always turn off ignition switch before disconnecting any electrical component.

Always verify that bullet-type connectors are free of corrosion, contamination or breaks when troubleshooting electrical problems.

Verify that bullet-type connectors are firmly seated. Listen and/or feel for a click when connecting them.

Ensure to release the lock on lock-type couplers before disconnecting them to avoid damaging the connector.

Pulling on the wires when disconnecting couplers can introduce problems. Hold the connectors themselves when disconnecting them, not their associated wires.

Inspect each male and female terminal of multi-pin connectors for corrosion, contamination, loose or bent pins.

BATTERY SAFETY

BATTERY LABEL

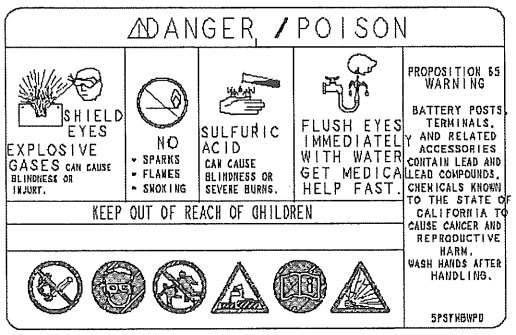

⚠ WARNING

Battery electrolyte is poisonous. It contains sulfuric acid. Serious burns can result from contact with skin, eyes or clothing. Antidote:

- External: Flush with water.
- Internal: Drink large quantities of water or milk. Follow with milk of magnesia, beaten egg, or vegetable oil. Call physician immediately.
- Eyes: Flush with water for 15 minutes. Call physician immediately.

Batteries produce explosive gases. Keep sparks, flame, cigarettes, etc. away. Ventilate when charging or using in an enclosed space. Always shield eyes when working near batteries.

KEEP BATTERIES AND BATTERY ACID OUT OF REACH OF CHILDREN.

CAUTION

The charging system used on the motorcycle is calibrated for the maintenance free battery that is installed as original equipment. Do not replace with a conventional lead-acid battery.

Before troubleshooting the charging system, inspect the battery thoroughly. A discharged, poorly charged or faulty battery will make the readings obtained during charging system troubleshooting erroneous or difficult to interpret.

⚠ CAUTION

Even with a good battery, battery voltage can recover after charging, but under excessive loads the battery voltage will drop quickly and eventually "die". Often the charging system is suspect when it is not the cause of the problem. Always inspect for excessive loads if the battery continues to lose its charge. Items such as incorrect wattage bulbs, sticking brake light switch(s), continuous low rpm operation or leaving the lights on without the engine running for long periods of time can drain a battery even if the charging system is operating correctly.

A battery will self-discharge when the motorcycle is not in use. Make sure to properly store the battery as outlined later in this section.

Maximum voltage and service life is only achieved when the battery is properly serviced initially. Make sure to follow instructions outlined later in this section.

Overcharging can be caused by a faulty battery (shorted cell). Test system with a known good battery when diagnosing an overcharge condition.

New batteries must be properly maintained as outlined in this section to ensure proper service life.

CAUTION

CONNECTING AND DISCONNECTING THE BATTERY

Always disconnect the negative battery cable first when removing the battery.

Always connect the positive battery cable first when connecting the battery.

If corrosion is found on terminals, remove battery and clean terminals with a solution of baking soda and water. Finish the process by cleaning terminals (both battery and battery cables) with a wire brush.

Once connections are secured, apply a thin film of Nyogel™ grease to the terminals.

Verify the positive terminal has it's protective boot in place.

CAUTION

WIRE ROUTING

Make sure that all wires are routed correctly.

CAUTION

FUSES

Fuses are in place to protect circuit wiring and components. Always determine the cause of an open fuse before installing a new fuse.

Do not increase the value of the fuse to correct the problem.

Do not use wire, tin foil or other substitutes for fuses.

CAUTION

ELECTRONIC COMPONENTS

Semiconductor parts used in electronic components will not withstand careless handling.

Do not drop or strike parts that contain semiconductors such as the ECM or rectifier/regulator. Dropping electronic components can cause damage to the component.

Follow instructions supplied in this chapter, including Fuel Injection Chapter and Electrical Chapter, very carefully when working on electronic components. Failure to follow instructions may cause irreparable damage to the part being inspected.

SPECIAL TOOLS

The following tools are available for purchase from our tool supplier, Bosch Automotive Service Solutions:

TOOL NAME	PART NUMBER
Engine Stop Tool	PV-43502
Flywheel Puller	PV-43533
Digital Multi-Meter	PV-43546
Connector Test Kit	PV-43526
Battery / Conductance Tester	MDX - 610P

BATTERY

BATTERY REMOVAL

1. See Battery Removal, page 2.22.

BATTERY CHARGING - NEW BATTERY

1. Charge the battery at *1.8 amps for 5 to 10 hours. use a straight rate charger (not load sensing or battery tender type) for the initial charge of a new battery.*

CAUTION
Do not attempt to quick charge the battery at any time.

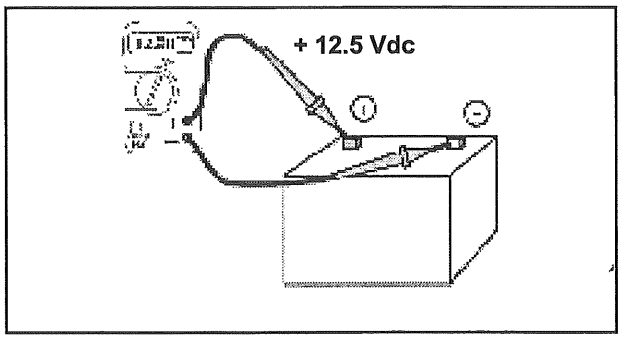

2. Remove battery from charger and let it sit for 30 minutes or longer.
3. Measure voltage with a digital multimeter. If lower than 12.5 Vdc, battery must be recharged again in accordance with step 1 and 2 above.
4. After charging battery and letting it sit for 30 minutes or more, check battery voltage again. If battery voltage is still below 12.5 Vdc, replace the battery.

BATTERY CHARGING - GENERAL

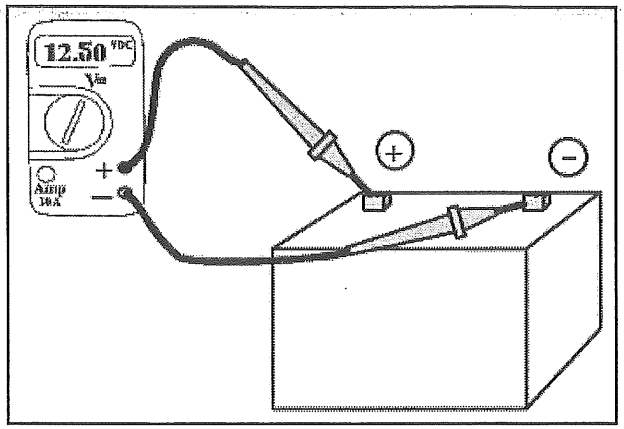

1. Measure battery voltage with a digital multimeter. The reading should be above 12.5 Vdc. If battery voltage is lower than 12.5 Vdc, battery must be charged according to the instructions given below.

CAUTION
Do not remove caps on battery while recharging. Do not attempt to inspect or add fluid to a maintenance free battery.

2. Charge battery at *1.8 amps for 5 to 10 hours.*

Battery Charging Specification: **1.8 A for 5-10 hours**

3. Remove battery from charger and let it sit for 30 minutes or longer.
4. Measure battery voltage with a digital multimeter. If battery voltage is lower than 12.5 Vdc, battery must be recharged again in accordance with step 1 and 2 above.
5. After charging battery and letting it sit for 30 minutes or more, check the battery voltage again. If battery voltage is still below 12.5 Vdc, replace battery.

NOTE
When motorcycle is not used for one (1) month or more, remove battery and store it in a cool, dry area. Inspect voltage monthly and charge according to above instructions if necessary.

DIAGNOSTICS

CHARGING SYSTEM TROUBLESHOOTING

The battery must be fully charged and in good condition to obtain accurate readings. Battery charging current is automatically reduced by the regulator / rectifier if the regulator / rectifier unit reaches a critical temperature (overheated). The system should be cool when testing DC charging output or when testing the regulator / rectifier to ensure accurate readings. Refer to test procedure for individual charging system components for more information.

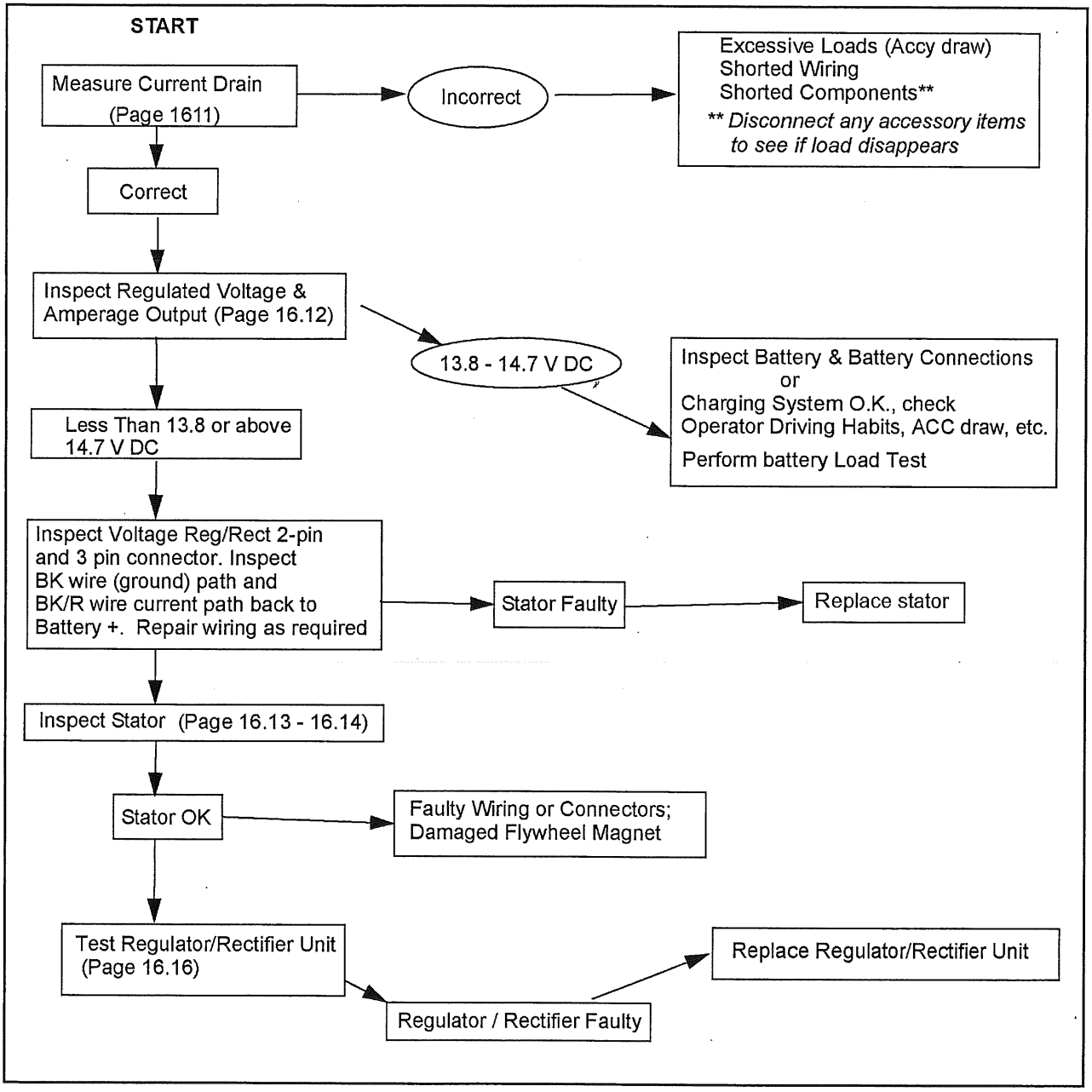

BATTERY LOAD TEST

Perform a battery load test using a battery load tester. Follow the load tester manufacturer's instructions carefully.

An alternate (less accurate) method is shown in the illustration below if a load tester is not available.

NOTE

This test is a general indicator of battery condition and is not valid for battery replacement under warranty. If charging system problems are suspected, perform the system tests outlined in this chapter.

1. Fully charge the battery.
2. Allow battery voltage to stabilize by waiting at least 5 minutes after charging is complete.
3. Connect a digital DC volt meter as shown below.
4. Record the voltage reading.
5. Turn headlight on and monitor the voltage for 1 Hour. Voltage should be within .5 volts of the value recorded in Step 4.
6. If the battery fails the load test, fully charge the battery again and repeat the test. Replace the battery if it does not pass the test after a second charge.

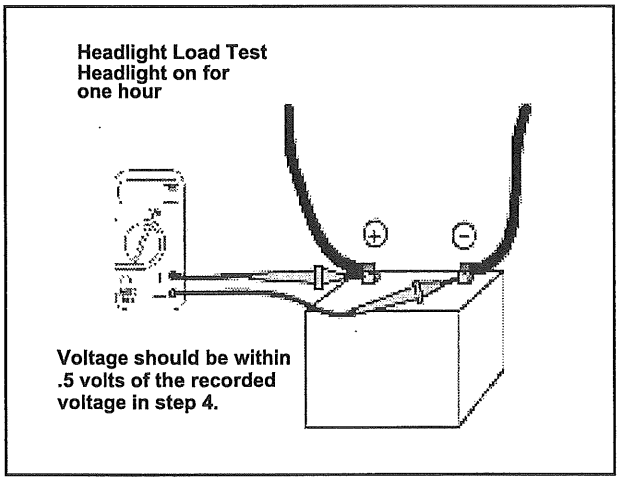

CURRENT DRAW INSPECTION (KEY OFF)

Current draw is suspect if battery discharges when motorcycle is not in operation (short periods of storage).

1. Turn key OFF and wait at least 30 seconds for all powered circuits to disconnect before performing the key-off current draw test.

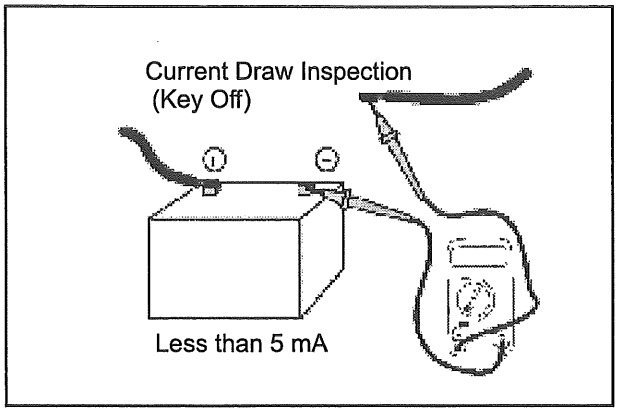

2. Disconnect ground cable (-) from battery.
3. Connect digital multi-meter red (+) probe to ground cable and connect black DMM (-) probe to battery negative (-) terminal.

   Fluke™ 73 Multimeter PV-43546
4. Read current draw (be sure 30 seconds has passed since key was turned OFF).
5. If current draw exceeds specifications, inspect wiring and components for short to ground.

Specification: Less than 5 mA

6. Locate the faulty component or wiring by disconnecting wiring connections one-at-a-time while observing current draw. Use the wiring diagram to locate possible current draws from battery. When current draw falls within specifications, the last connection disconnected shows which circuit or component is affected.

BATTERY TESTING

The recommended battery tester for all Victory batteries is special tool: PU-50296 / MDX - 610P.

Polaris Battery Tester
Part #: PU-50296 / MDX-610P

BATTERY CONDUCTANCE ANALYZER

Conductance describes the ability of a battery to conduct current. A conductance tester functions by sending a low frequency AC signal through the battery and a portion of the current response is captured, from this output a conductance measurement is calculated. Conductance testing is more accurate than voltage, specific gravity, or load testing.

Authorized Polaris dealers / distributors are required to use the conductance analyzer when testing 12V Polaris batteries.

REGULATED VOLTAGE / AMPERAGE OUTPUT INSPECTION

1. Remove center chin fairing (Fastener Torque Reference, page 16.3).
2. Remove negative battery leads and connect a 12V shunt as outlined in the instructions provided with shunt or use an inductive amperage clamp.

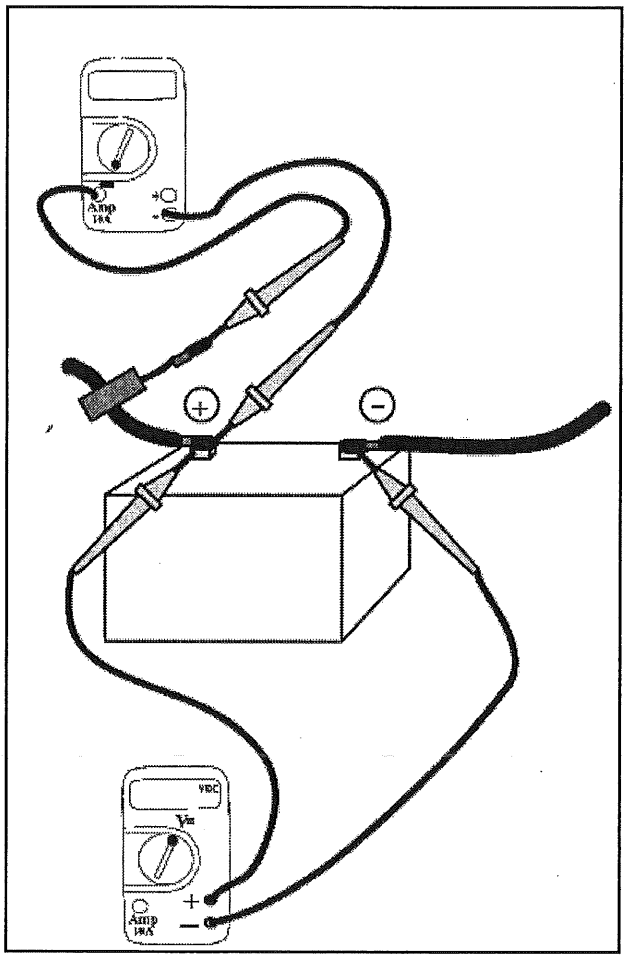

3. Set digital multimeter (DMM) to V DC scale.
4. Connect DMM red (+) lead to battery (+) terminal and DMM black (-) lead to battery (-) terminal.
5. Start engine and warm to operating temperature.
6. At 1000 RPM or slightly above; the ammeter should reach the "break-even" point (no amperage leaving the battery).
7. The voltmeter should be rising toward 14 VDC.

Break-even point for charging System: 1500 RPM

8. Increase engine RPM to 2500. The ammeter should rise a slight amount, then stabilize. Volt meter should read above 14 V DC.
9. Use results obtained from preceding tests and the following descriptions to determine if charging system is functioning properly.

   CHARGING SYSTEM OPERATING CORRECTLY: Ammeter goes up a small amount, then stabilizes slightly above +0 amps. Volt meter rises toward 14.8 V DC, drops off a little and starts to stabilize.

   LOW BATTERY:
   Amperage continues to rise, voltage levels off as battery is absorbing voltage. Need to charge battery fully or use a good battery and repeat test.

   CHARGING SYSTEM UNDERCHARGING:
   Ammeter drops to 0 or remains below 0 (negative reading) at all rpm, volt meter remains the same or goes down. Go to voltage drop inspection.

   CHARGING SYSTEM OVERCHARGING:
   Ammeter rises well above 0 and remains there or continues to rise. Volt meter goes well above 14.8 V DC and may continue to rise. Go to voltage regulator/rectifier inspection.

   EXCESSIVE LOAD:
   Amperage levels off or starts to drop, voltage continues to rise. Load may be excessive (accessories or shorted components). Determine if excessive loads are present (disconnect accessories and re-test).
10. Turn ignition key off.
11. Remove ammeter shunt or inductive clamp.
12. Re-connect negative battery cables to battery.
13. Install center chin fairing.

STATOR NO-LOAD AC VOLTAGE OUTPUT

NOTE

Engine must be started during this test. Be sure to heed the following Warnings and Cautions.

⚠ WARNING

HOT COMPONENTS

The engine and exhaust system become very hot during operation and remain hot for a period of time after the engine is shut off. Wear insulated protection for hands and arms or wait until the engine and exhaust system have cooled sufficiently before working on the machine.

⚠ WARNING

CARBON MONOXIDE

Never run an engine in an enclosed area. Exhaust contains poisonous carbon monoxide gas that can cause loss of consciousness and may lead to death. If you must run the engine to do some repairs, do so in an open area or with an exhaust evacuation system operating.

CAUTION

VOLTAGE / ARCING

Use caution not to touch any of the connections or allow the exposed terminals to come close to any other part of the vehicle or other objects, as an arc may occur.

1. Be sure engine is cool or well below operating temperature prior to testing.
2. Lift tab (A) and push the 3-Pin stator connector toward the front of the vehicle to disconnect.

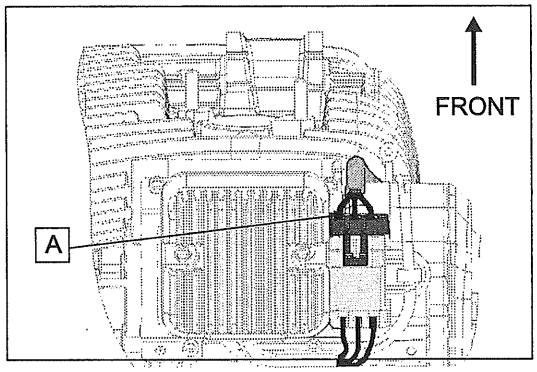

3. Set Digital Multimeter (DMM) to AC Volts scale (if meter has a Vrms selection use Vrms).

4. Connect one meter lead to Pin A on wire connector that comes from stator and the other lead to Pin B.

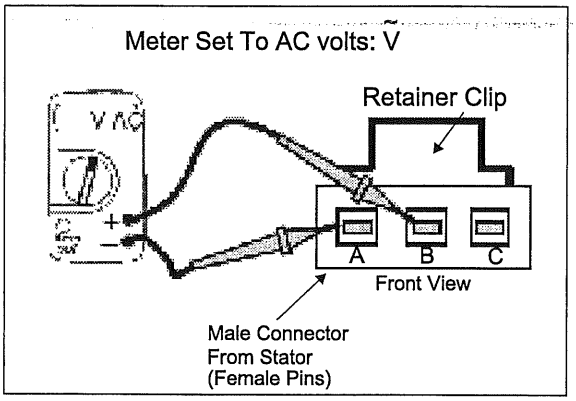

5. Start engine and let it idle. Observe DMM reading.
6. The meter should indicate a minimum reading of 17.5-21VAC at idle.
7. If using a meter other than the Fluke, be sure your meter reads rms volts.
8. Repeat test for pins A & C.
9. Repeat test for pins B & C.

No load AC Volts @ 900 RPM:
48A Alternator - Approx ~ 17.5-21 VAC @ 900 RPM

NOTE

The test results in steps 7, 8 and 9 can read more than specified VAC, but it is important that the reading for each pair of wires is approximately equal.

10. Increase RPM to 2000. Repeat Steps 4-9.

No load AC Volts @ 2000 RPM:
48A Alternator - Approx ~ 44 VAC @ 2000 RPM

NOTE

The test results obtained in step 11 can read more than specified VAC, but it is important that they are all approximately equal.

STATOR RESISTANCE INSPECTION

⚠ CAUTION

Engine must be OFF while performing this test.

NOTE

Engine OFF and cool.

Meter Set To Ohms: Ω

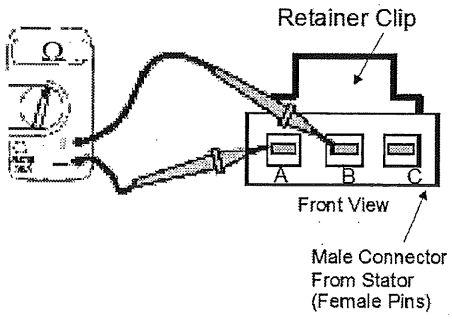

1. Disconnect 3-pin stator connector as described in Step 2 of No-Load AC Volts Inspection (Stator No-load AC Voltage Output, page 16.11).
2. Set meter to OHMs scale.
3. Connect one lead of meter to any pin in multi-connector leading from stator and the other lead to any other pin.
4. Observe meter reading.
   STATOR RESISTANCE: 0.1-0.5 Ω (see below)

⚠ CAUTION

Do not allow your hands or fingers to touch meter leads or one meter lead and any grounded portion of the motorcycle or reading obtained will be inaccurate.

NOTE

0.3 to 0.5 ohms may be less than the internal resistance of your meter. Before measuring stator resistance, connect meter leads together and record the resistance. Subtract meter resistance from stator resistance readings.

EXAMPLE: True reading is:
0.7 Ω (observed reading when checking stator)
- 0.3 Ω (meter/lead resistance)
= 0.4 Ω (true stator winding resistance

5. Repeat resistance test on all remaining combinations of the three pins A, B, and C.

STATOR WINDINGS TO GROUND INSPECTION

NOTE

Engine OFF and cool.

1. Disconnect 3-pin stator connector as described in Step 2 of No-Load AC Volts Inspection (Stator No-load AC Voltage Output, page 16.11).
2. Set meter to OHMs scale.
3. Connect one meter lead to Pin A and the other to a good engine ground.
4. Observe meter reading. There should be no continuity to ground.

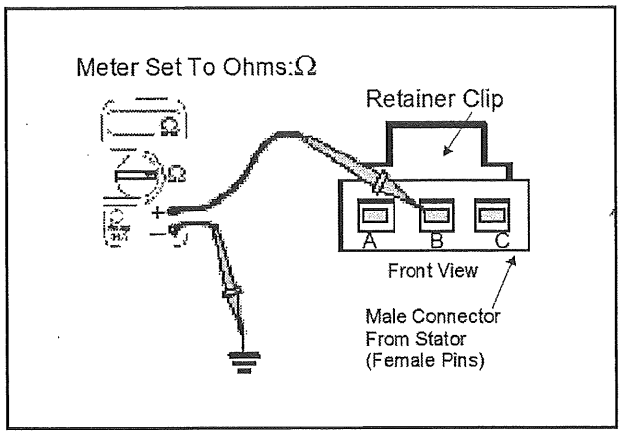

STATOR WINDING TO GROUND: Open Circuit (OL)

5. Repeat test for other two stator leads (Pin B and Pin C).

VOLTAGE DROP: RECTIFIER / REGULATOR TO BATTERY(+)

NOTE

Leave regulator / rectifier connected for this test.

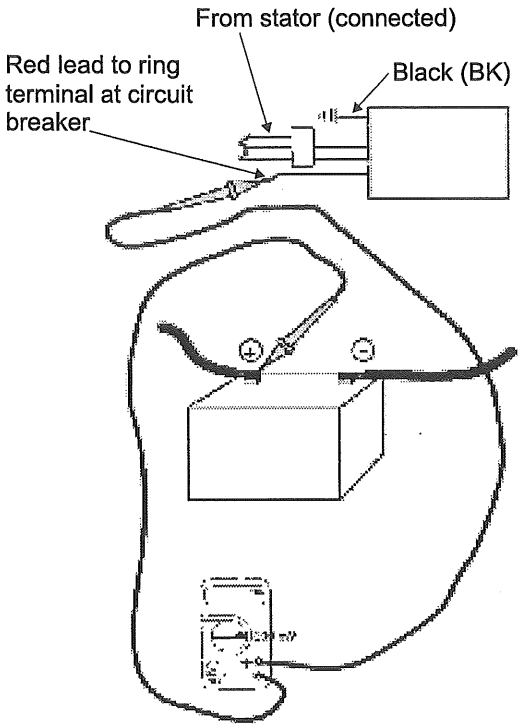

1. Remove the electrical cover (below the oil cooler).
2. Set Digital Multi-Meter (DMM) to DC Volts scale (or 300 mV scale).
3. Connect red lead (+) of DMM to the ring terminal of the Red regulator / rectifier lead at the circuit breaker.
4. Connect black lead (-) of DMM to positive (+) battery cable at battery.
5. DMM must read below 0.1 volts DC (100 mV). If it does read 0.1 V DC or less the circuit is O.K.

Voltage Drop Specification
< 0.1 V DC

6. If DMM reads above 0.1 volts DC there is excessive resistance in the circuit that must be corrected.

16

7. Possible problem areas could be the battery cable, cable end connections, cable to battery terminal connection, the ring terminal connection to the regulator rectifier red wire. Visual inspections or continued voltage drop inspections are necessary to determine the cause.

RECTIFIER / REGULATOR CONNECTOR INSPECTION

1. Disconnect 3 pin connector.

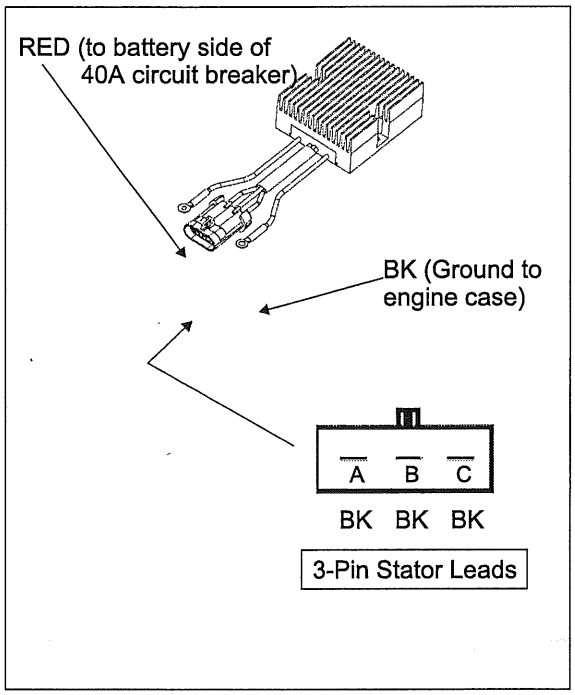

2. Inspect male and female pins in the 3-pin connector and the ring terminals of the positive (red) and negative (black) regulator / rectifier leads. Check for corrosion, loose pins, poor connections, or evidence of overheating or other damage.
3. If the wiring and connectors are undamaged and appear to be clean and tight, inspect the battery, stator, and related wiring. Test the regulator / rectifier as described in the following tests.

NOTE

Do not touch the meter leads when testing the regulator rectifier. Readings in the following chart are correct for a Fluke™ 73 multimeter. Use of other meters may affect test results.

DIODE LEAKAGE TEST

NOTE

Engine must be OFF and engine cool.
Do not touch meter leads when testing the regulator rectifier. Readings in the following chart are correct for a Fluke™ multimeter. Use of other meters may produce different results.

Diode Leakage Test

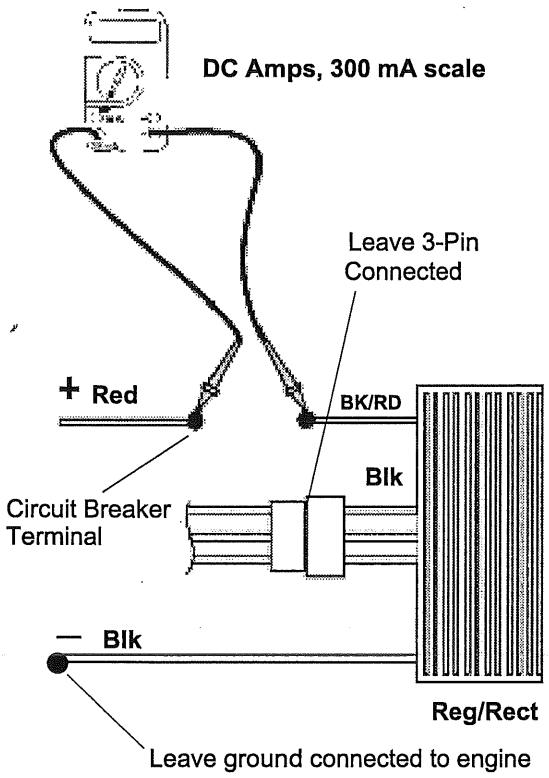

1. Disconnect regulator / rectifier (BK/RD) wire from the 40A circuit breaker terminal (battery side).
2. Reinstall nut on circuit breaker and torque to25 in-lbs (2.8 Nm).
3. Leave ground wire connected to engine.
4. Connect black meter lead to the BK/RD wire from the regulator / rectifier, and the red (+) meter lead to the circuit breaker terminal.
5. Compare leakage to specification below.

DIODE LEAKAGE: Less than 1.0 mA

REGULATOR / RECTIFIER TEST

- Remove regulator / rectifier or completely disconnect all wires (3-Pin stator connector, ground (black) from engine case, and BK/RD wire from circuit breaker terminal). Unit must be cool for accurate testing.
- Use **DIODE CHECK** function on the Fluke 73 DMM
- Perform all tests described in test table below. Test results describe a properly functioning part.

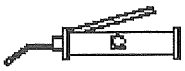

Apply Di-electric grease
P/N 2871329

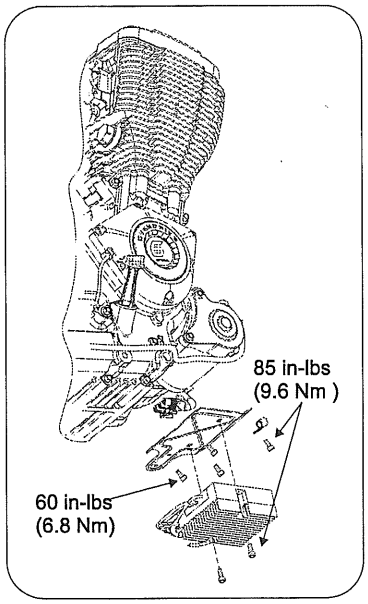

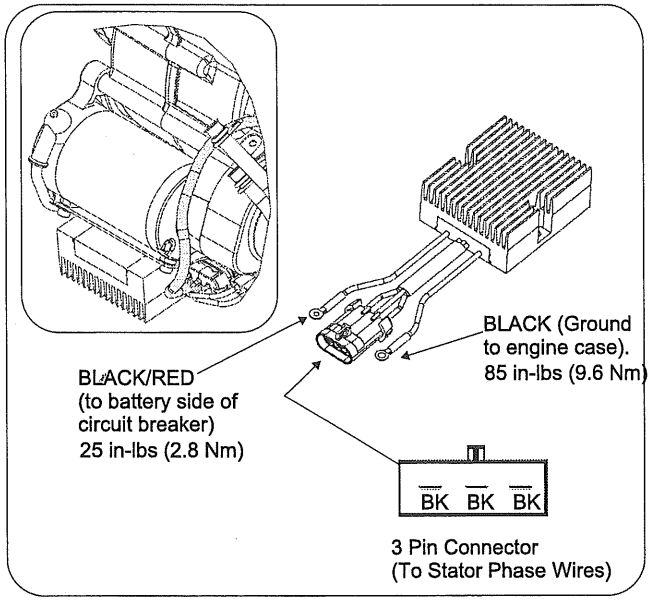

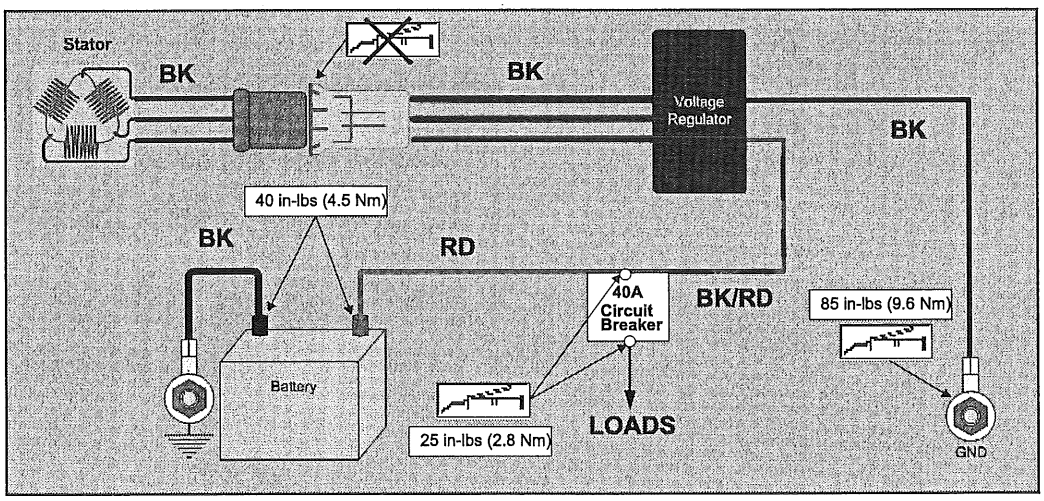

16

Regulator / Rectifier Test Table - Set DMM to *DIODE CHECK* Function

DMM RED LEAD	DMM BLACK LEAD	RESULT
AC Phase 1 (Pin A of 3-pin)	AC Phase 2 (Pin B of 3-pin)	Open Circuit
AC Phase 2 (Pin B of 3-pin)	AC Phase 3 (Pin C of 3-pin)	Open Circuit
AC Phase 1 (Pin A of 3-pin)	AC Phase 3 (Pin C of 3-pin)	Open Circuit
AC Phase 2 (Pin B of 3-pin)	AC Phase 1 (Pin A of 3-pin)	Open Circuit
AC Phase 3 (Pin C of 3-pin)	AC Phase 1 (Pin A of 3-pin)	Open Circuit
AC Phase 3 (Pin C of 3-pin)	AC Phase 2 (Pin B of 3-pin)	Open Circuit
Battery + Lead (Ring terminal of BK/R wire)	Ground Lead (Ring terminal of Black wire)	Open Circuit
Ground Lead (Ring terminal of Black wire)	Battery + Lead (Ring terminal of Red wire)	Open Circuit
Ground Lead (Ring terminal of Black wire)	Case	Closed Circuit (continuity)
Ground Lead (Ring terminal of Black wire)	Any Phase	Open Circuit
Any Phase	Ground Lead (Ring terminal of Black wire)	Open Circuit
Battery + Lead (Ring terminal of Red wire)	Any Phase	Open Circuit
AC Phase 1 (Pin A of 3-pin)	Battery + Lead (Ring terminal of Red wire)	365mV to 515mV
AC Phase 2 (Pin B of 3-pin)	Battery + Lead (Ring terminal of Red wire)	365mV to 515mV
AC Phase 3 (Pin C of 3-pin)	Battery + Lead (Ring terminal of Red wire)	365mV to 515mV

RECTIFIER / REGULATOR REPLACEMENT

1. Remove center chin fairing (Fastener Torque Reference, page 16.3) and electrical cover.
2. Lift cover off circuit breaker and remove positive regulator / rectifier lead from battery side terminal of breaker.
3. Remove ground screw from left front of crankcase and remove negative regulator / rectifier lead.
4. Lift tab (A) and push forward to separate the 3-pin connector.

5. Remove regulator / rectifier mounting screws (B).

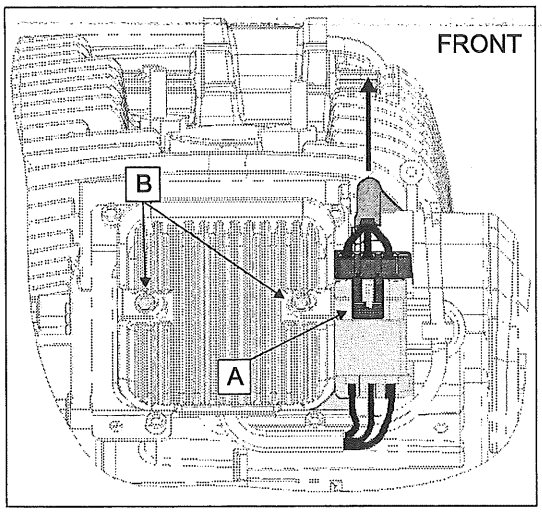

6. Remove wires from wire guides.
7. Reverse order of removal to install. Be sure mounting bracket is clean and all connections are clean and tight. Secure wires and connectors, and torque all screws.

8. Torque circuit breaker nuts to specification.

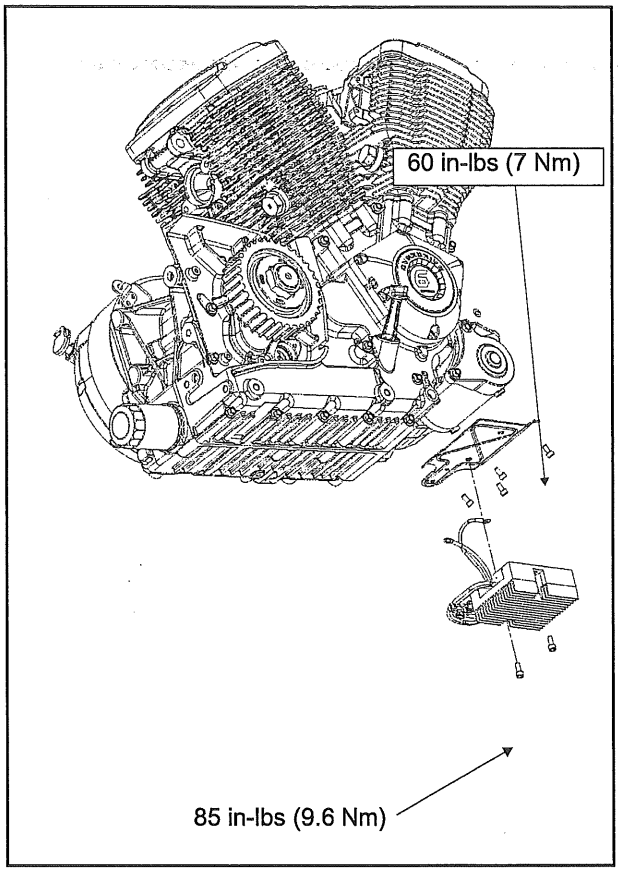

TORQUE
Circuit Breaker Nuts: **25 in-lb (3 Nm)**

16

STATOR REMOVAL

1. Remove primary cover (Primary Cover Removal, page 9.10).
2. Place primary cover on bench with padded material between primary cover and bench top.
3. Remove wiring retainer plate (A).
4. Remove three (3) socket head screws (B).
5. Remove stator from primary cover.

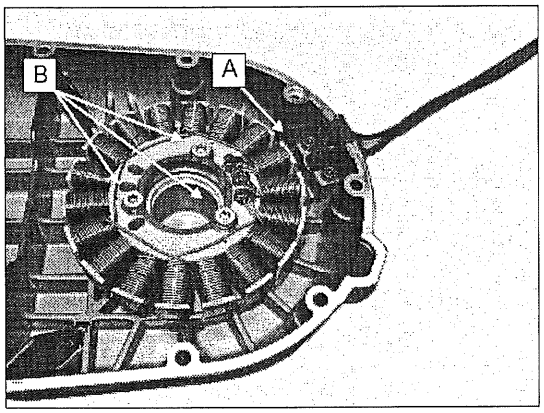

STATOR INSTALLATION

1. Clean stator mounting surface and screw holes in primary cover.
2. Place stator in primary cover taking care to route wires correctly in the channel.
3. Install screws and torque to specification.

TORQUE
Primary Cover Screws: **100 in-lb (12 Nm)**

4. Install grommet (C) into groove in cover and then install retainer plate. Torque screws to 50 in-lbs (5.7 Nm).

TORQUE
Retainer Screws: **50 in-lb (6 Nm)**

5. Pull wires to remove any slack or loop at point (D). Wires must not protrude into flywheel rotor area.
6. Install primary cover (Primary Cover Installation, page 9.13).

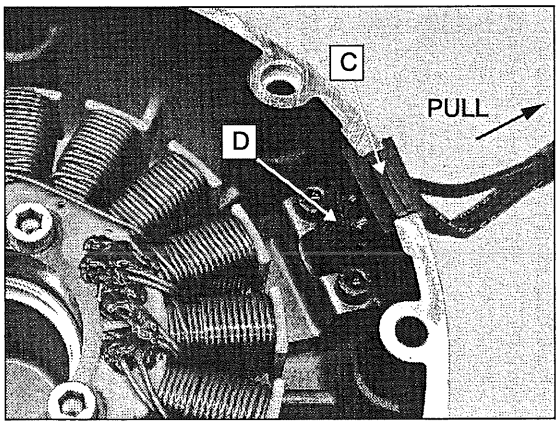

FLYWHEEL REMOVAL

Refer to Rotor (Flywheel) Removal, page 9.29.

CHAPTER 17
IGNITION SYSTEM / BATTERY

GENERAL INFORMATION....17.2
SAFETY INFORMATION....17.2
SPECIAL TOOLS....17.2
IGNITION SYSTEM SPECIFICATIONS....17.2
TORQUE SPECIFICATIONS – IGNITION SYSTEM....17.3
IGNITION COIL....17.4
IGNITION COIL REMOVAL....17.4
IGNITION COIL INSTALLATION....17.4
IGNITION SWITCH REMOVAL....17.4
TROUBLESHOOTING....17.5
BASICS....17.5
IGNITION CIRCUIT DIAGRAM....17.5
TEST LEAD ADAPTER KIT....17.6
ECM CONNECTOR MAP....17.6
IGNITION SYSTEM TEST FLOWCHART....17.7
BATTERY VOLTAGE INSPECTION - TEST 1....17.8
SPARK INSPECTION - TEST 2....17.8
COIL HIGH TENSION LEADS - TEST 3....17.9
IGNITION COIL SIGNAL - TEST 4....17.10
IGNITION COIL RESISTANCE - TEST 5....17.11
CRANKSHAFT POSITION SENSOR (CPS) RESISTANCE INSPECTION - TEST 6....17.12
CRANK POSITION SENSOR CIRCUIT AND SIGNAL TEST 6A....17.12
CRANK POSITION SENSOR CIRCUIT CONTINUITY TEST 6B....17.13
GROUND CIRCUIT INSPECTION - TEST 7....17.13

GENERAL INFORMATION

SAFETY INFORMATION

There are many hazards present when working on or around the ignition system. Read and pay close attention to the following warnings and cautions when working on any component in this section.

⚠ WARNING

Never run an engine in an enclosed area. Exhaust contains poisonous carbon monoxide gas that can cause loss of consciousness and may lead to death. If you must run the engine to do repairs, do so in an open area or with an exhaust evacuation system operating.

⚠ WARNING

The engine and exhaust system become very hot during operation and remain hot for a period of time after the engine is shut off. Wear insulated protection for hands and arms or wait until the engine and exhaust system have cooled before working on the machine.

CAUTION

Some procedures call for the engine to be run in order to warm the engine to operating temperature. If this is done the exhaust pipes can "Blue" if a cooling air stream is not provided by means of a shop fan directed at the exhaust system. (particularly the head pipes).

CAUTION

Parts containing semi-conductors can be easily damaged if handled carelessly. Do not drop or subject the electronic components to shock loads.

CAUTION

Follow the instructions closely when troubleshooting items in this section. Some electrical components can be damaged if they are connected or disconnected while the ignition switch is ON and current is present.

CAUTION

Using incorrect heat range spark plugs can damage the engine. Always follow the manufacturer's recommendations for spark plug heat range.

GENERAL CAUTIONS TO OBSERVE WHEN WORKING ON IGNITION SYSTEM

- This ignition system is controlled electronically and no provisions are available to inspect or change ignition timing. A timing light is still valuable as a diagnostic tool.
- Poor connections are the most common cause of ignition problems. Inspect all connections and replace the spark plugs before doing extensive ignition system troubleshooting.
- Make sure the battery is fully charged and that the charging system is operating correctly.
- A signal from the Crankshaft Position Sensor must be present for spark to occur.

SPECIAL TOOLS

SPECIAL TOOL	PART NUMBER
Connector Test Lead Adapter Kit	PV-43526
Fluke 73™ Digital Multimeter	PV-43546
Inductive Timing Light	PV-43537

IGNITION SYSTEM SPECIFICATIONS

ITEM		SPECIFICATIONS
Spark Plug		NGK DCPR6E
Spark Plug Gap		0.8 mm (0.032")
Ignition Coil Resistance	Primary	0.3 - 0.6 Ω ± 20%
	Secondary	See coil test Ignition Coil Resistance - Test 5, page 17.11
	Plug Wire (with cap*)	

ITEM		SPECIFICATIONS
		Front: 4360 - 5780 Ω** / Rear 4080 - 5050 Ω**
Crank Position Sensor Resistance		280 Ω ± 10% (No short to ground)
* Spark plug end caps are not removable ** See Coil High Tension Leads - Test 3, page 17.9 for test procedure		

TORQUE SPECIFICATIONS – IGNITION SYSTEM

DESCRIPTION	TORQUE NM	TORQUE FT-LBS (IN-LBS)
CPS Screws (to cover)	7 Nm	(60 in-lbs)
Ignition Coil to Frame	11 Nm	(100 in-lbs)
Spark Plug (apply anti-seize)	11 Nm	(100 in-lbs)
Timing Wheel Bolt (on RH end of crankshaft)	28 Nm	17 ft-lbs
Rotor (Flywheel) Bolt	102 Nm	75 ft-lbs

IGNITION COIL

IGNITION COIL REMOVAL

1. Turn ignition switch OFF and remove key.
2. Pull ignition coil cover (A) straight outward to remove.
3. Remove both high tension leads (B) from coil.

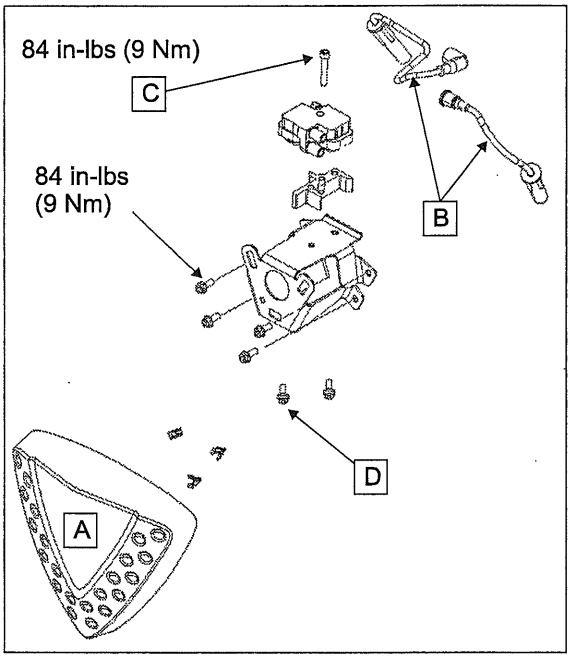

4. Remove screw (C) and ignition coil. To remove coil with bracket, remove 2 screws (D).
5. Press tab (E) to remove primary connector.

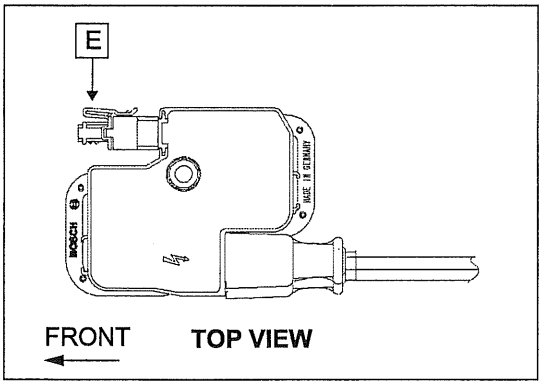

6. Remove ignition coil.

IGNITION COIL INSTALLATION

1. Installation procedure is the reverse of removal procedures.
2. Apply light film of dielectric grease inside the spark plug boot of high tension leads.
3. Torque coil mount screw (or screws if coil was removed with bracket attached) to specification.

TORQUE
Ignition Coil: **84 in-lb (9 Nm)**

IGNITION SWITCH REMOVAL

1. Turn ignition switch OFF and remove key.
2. Pull ignition coil cover straight outward to remove.
3. Remove mounting screw from face of switch bracket.
4. Open or cut any tie straps that secure the harness.
5. Separate ignition switch connector from main wire harness by pushing the tab to release.

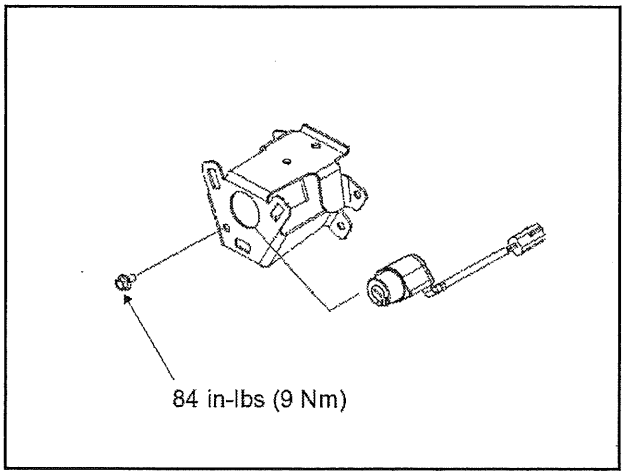

TROUBLESHOOTING

BASICS

Before troubleshooting the ignition system, ensure that the engine stop switch is in the run position, that the battery is fully charged, and that system related fuses are not open (blown). Check visually for corroded, loose, or broken connections in critical areas such as the sensor connector itself, or at the engine-to-chassis harness 14 pin connector. Check for loose wire pins in the individual sensor connectors and at the ECM (under the seat).

The Ignition System Troubleshooting flow chart (and the accompanying text) is designed to help you troubleshoot ignition system problems. It will not lead you to faulty or fouled spark plugs. Always inspect spark plug condition *first* (and replace if necessary) when troubleshooting ignition system problems.

Be sure that the spark plugs are the correct heat range and are the specified resistor spark plugs. Non-resistor spark plugs can introduce electrical problems due to increased Radio Frequency Interference (RFI).

⚠ WARNING
Extremely high voltage is present in the ignition system. Do not touch the ignition coil, wires or spark plugs during test procedures.

IGNITION CIRCUIT DIAGRAM

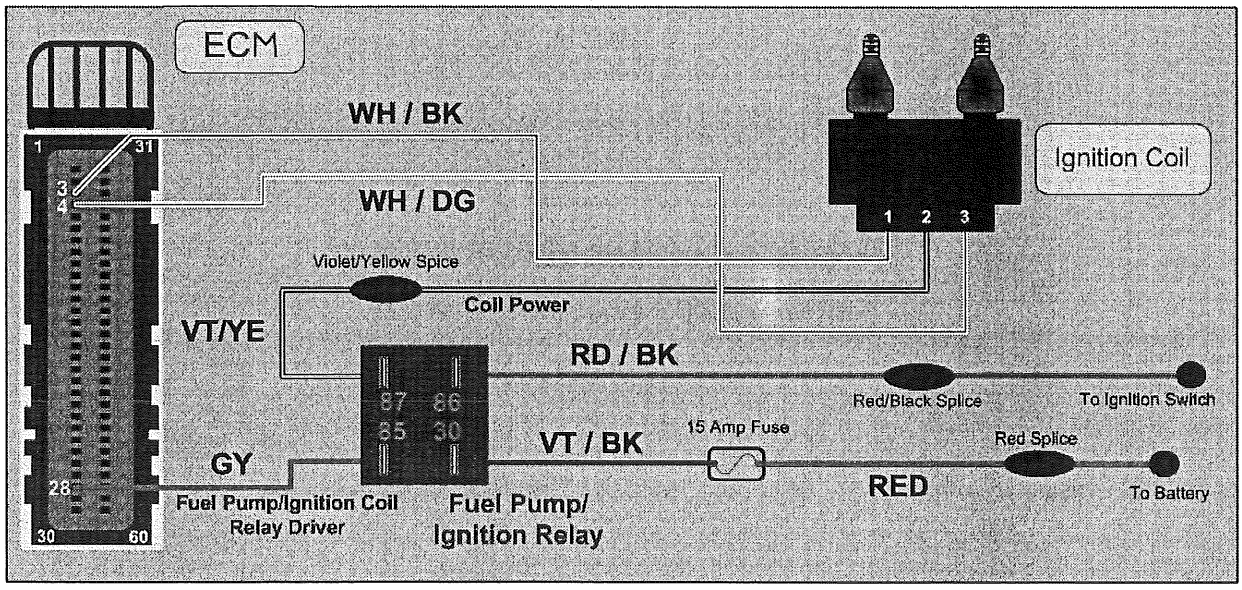

17

TEST LEAD ADAPTER KIT

1. Tests in this section may include the testing of voltage and / or resistance at the connectors for various sensor and system components. Use the appropriate test adapter lead when performing these tests at connector pin(s).
2. Forcing an incorrect or oversized probe into a connector may damage, misalign, or expand the connector pin or socket. It can also damage the connector housing, creating another problem which greatly complicates the diagnostic process. Extreme care must be taken not to introduce problems while probing a connector.

   Test Lead Adapter Kit: PV-43526 or suitable Fluke test adapter leads.

CAUTION

Once the ECM connector has been separated from the ECM, do not touch the ECM pins. Static electricity from your body can damage the ECM. Do not attempt to perform tests on the ECM. Tests are done on socket side of the connector. Views of the 60 pin connector in this Chapter are from the WIRE side of the connector.

3. The ECM connector is marked 1, 30, 31, and 60 on the *wire side* of the connector. Refer to the diagram below for a description of wire location / function, and wire colors.
4. Use the information on the following pages to perform ignition system related tests at ECM connector or component.

ECM CONNECTOR MAP

Refer to ECM Connector Removal, page 5.48 to remove connector from ECM.

TOP VIEW - ECM CONNECTOR (WIRE SIDE SHOWN)

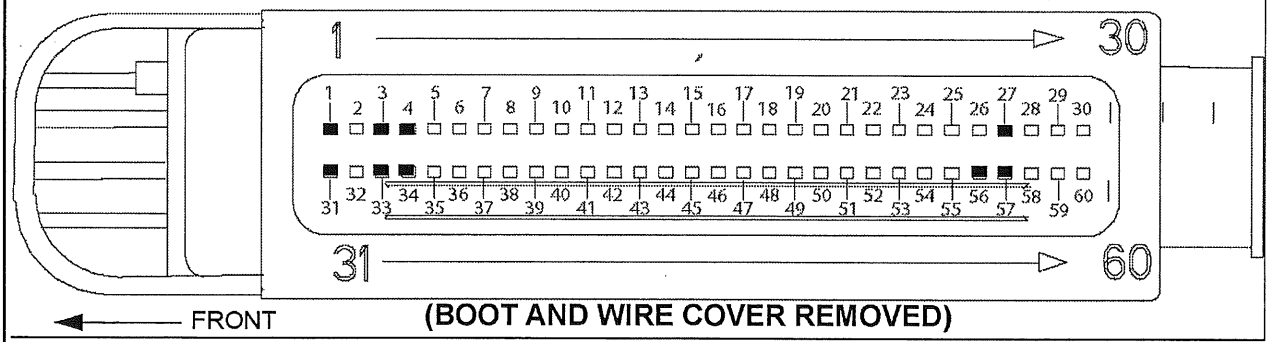

(BOOT AND WIRE COVER REMOVED)

IGNITION RELATED ECM CONNECTOR MAP

System related wire color & pin number shown. Refer to wiring diagram for complete information.

1	2	3	4	5	27	28	29
VIO/PK VPWR	OPEN	W / BK IG COIL SIGNAL (REAR)	W / GN IG COIL SIGNAL (FRONT)	OPEN	OPEN	GY FUEL PUMP RELAY GROUND ECM CONTROLLED	OPEN

BN = Brown; GN = Green; BK = Black; GY = Gray; PK = Pink; R = Red; VIO = Violet; W = White

31	32	33	34	35	56	57	58	59
VIO/PK VPWR	OPEN	BK/W ECM GROUND	R/BK IGN SNS	OPEN	OPEN	R CPS +	BK CPS -	OPEN

VERIFY TERMINAL PINS ARE NOT LOOSE IN CONNECTOR AND WIRE CONNECTION TO TERMINAL PIN IS SECURE. NOTE: CONNECTOR IS MARKED WITH NUMBERS 1, 30, 31, and 60 ONLY.

IGNITION SYSTEM TEST FLOWCHART

Before proceeding: 1) Verify battery voltage is at least 12.5 Vdc (Test 1).
2) Check fuel pump fuse (10A) and engine fuse (15A)
3) Turn ignition key ON and engine stop switch to RUN. Listen for fuel pump. Pump should run for 2-3 seconds at initial power up. If fuel pump does not run, see Chapter 5.

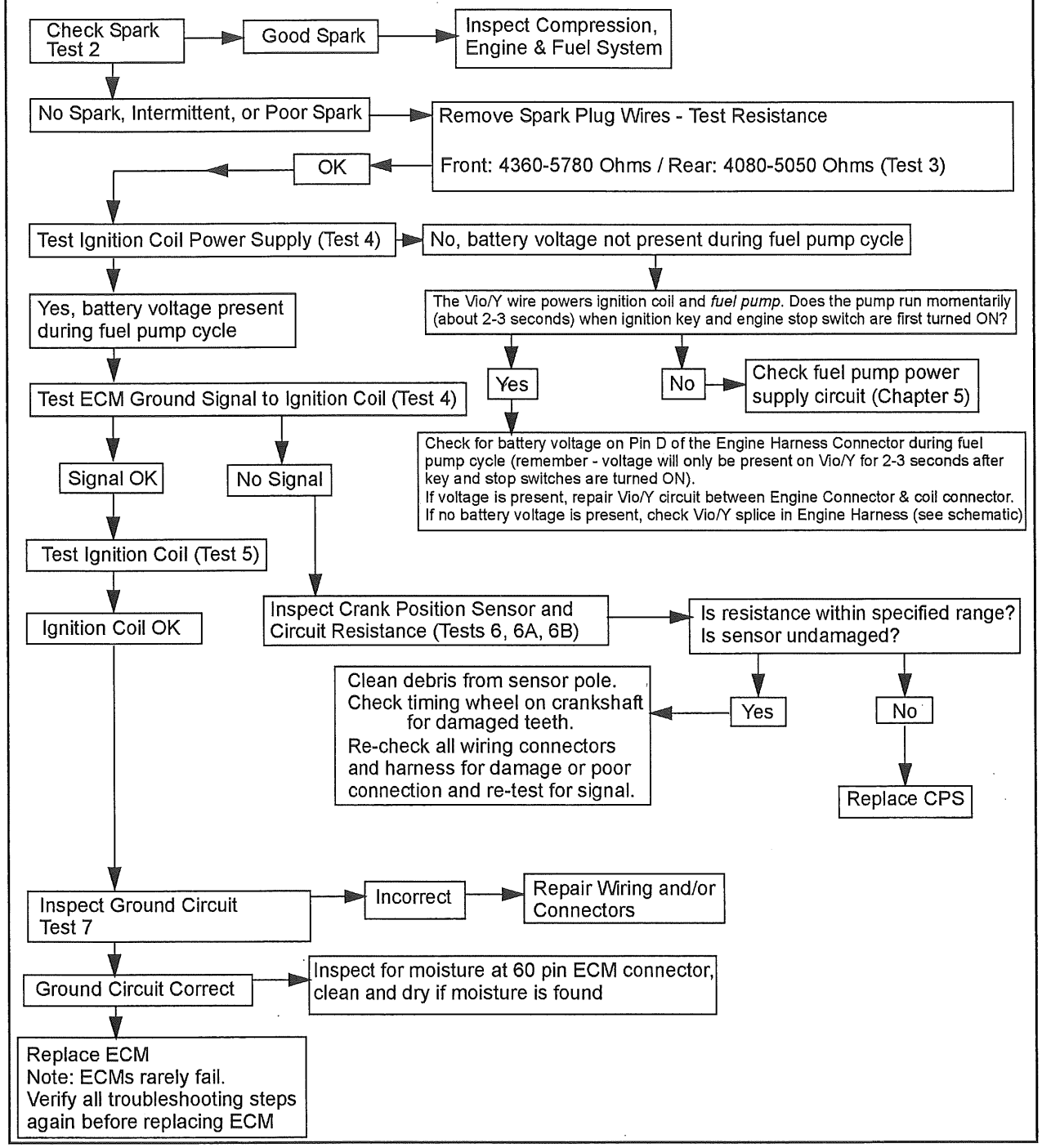

17

BATTERY VOLTAGE INSPECTION - TEST 1

1. Access battery area at front of motorcycle.
2. Set Digital Multimeter (DMM) to DC Volts.

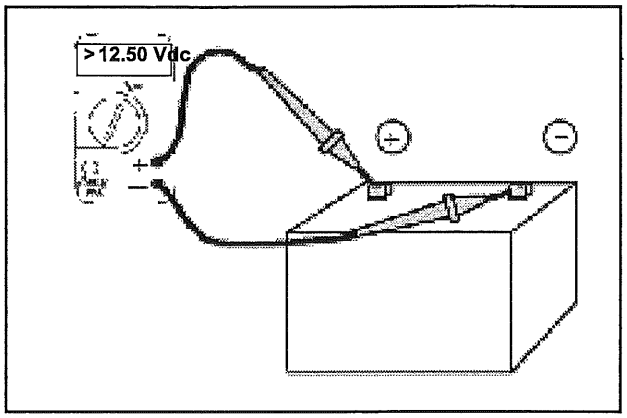

3. Inspect battery voltage.
4. If the battery voltage is below 12.5 Vdc, charge or replace the battery with a fully charged battery. Refer to Battery Inspection, page 2.22 for battery inspection, battery charging and charging system inspection.

NOTE

When operating the starter with a low battery, the voltage available for the ignition coils can drop below the minimum required to produce spark.

SPARK INSPECTION - TEST 2

1. Connect an inductive timing light to one spark plug wire.

   Inductive timing light PV-33277-A

2. Turn ignition switch and engine stop switch ON.
3. Shift transmission into neutral and pull in clutch lever.
4. Depress starter button and observe timing light.
5. Determine if timing light flashes without interruption for both cylinders.
6. Consistent flashes indicate some secondary voltage is present. The likelihood of an ignition related problem is reduced but not eliminated. Keep the following points in mind:

- There is a threshold voltage and current required for timing lights below which they will not trigger and therefore, not flash.
- Fouled spark plugs may drop secondary voltage so low that a timing light will not trigger.
- With no current flowing (open secondary side of the ignition coil) the timing light will not flash.
- A faulty high tension lead (plug wire) or poor connection is one example of an open secondary.

7. Replace spark plugs, connects plug wires and re-test.
8. If timing light does not flash consistently for one or both cylinders, test high tension leads (Test 3).

NOTE

The plug caps or coil ends are NOT removable. Wire must be replaced as an assembly.

COIL HIGH TENSION LEADS - TEST 3

CAUTION

Do not attempt to remove the spark plug caps from the spark plug high tension leads. Spark plug caps are molded to plug wires and available only as an assembly. Wire resistance specifications includes the resistance of the spark plug caps.

1. Remove high tension leads (HTL) by pulling firmly on the boots at the coil and spark plug. DO NOT pull on the wire or HTL may be permanently damaged.

NOTE

The ignition coil end of the wire is coated with a film of dielectric powder. Apply dielectric grease to this connection if powder film is cleaned or removed.

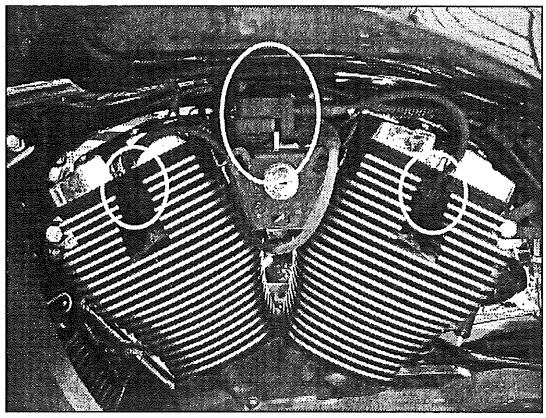

2. Test each high tension lead with an ohmmeter and compare to specification. Move wire to detect internal breaks or poor connections at terminal ends.

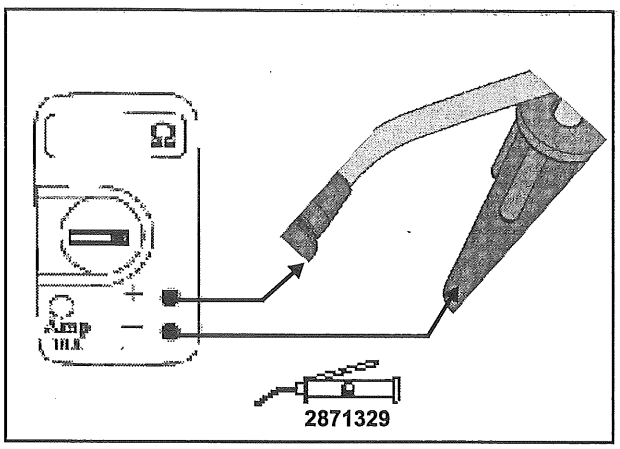

High Tension Lead Resistance
Front: 4360 - 5780 Ω
Rear: 4080 - 5050 Ω

17

IGNITION COIL SIGNAL - TEST 4

Power To Ignition Coil

Battery voltage must be present at the ignition coil during fuel pump initial cycle, during cranking, and with the engine running.

1. Remove ignition switch cover (Ignition Switch / IAC Cover, page 3.6).
2. Press tab (A) and disconnect coil harness.

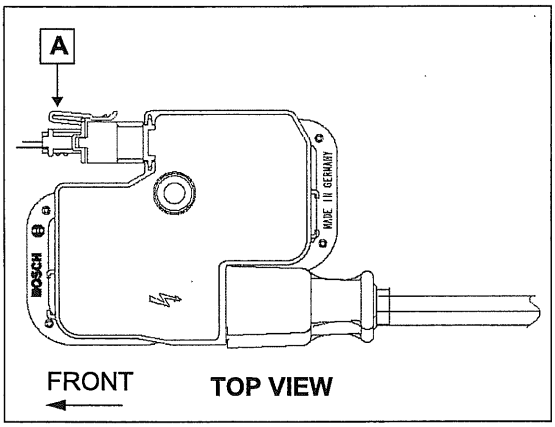

3. Place DMM selector dial on *Volts DC* scale.
4. Connect black lead to ground (on engine).
5. Connect a small thin test adapter lead to center terminal of ignition coil primary connector and positive (+) meter lead to the test adapter.

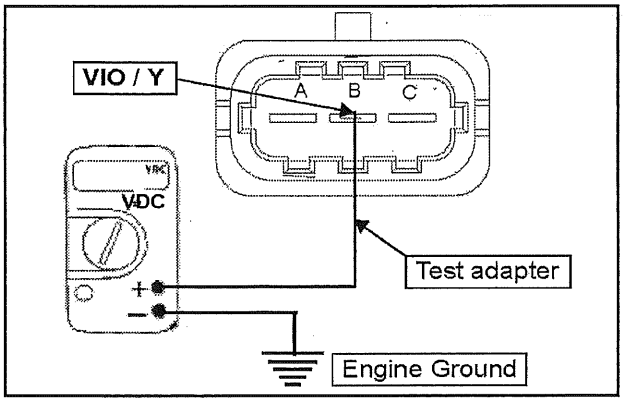

6. With engine stop switch OFF, turn ignition key ON.
7. Turn engine stop switch to RUN. Battery voltage should appear on center terminal of connector for 2-3 seconds until the pump completes its prime cycle.
8. With transmission in Neutral, crank the engine. Battery voltage should again be present on the terminal.

   ECM (Ground) Signal To Ignition Coil

   ECM ground signal must be present at each outer terminal of the connector. The signal will appear as a pulse on the meter bar graph with DMM selector in the OHMs position.
9. Place the DMM selector dial on the *OHMS* scale.
10. Place a small thin test adapter into one outer terminal of the connector (either WH/BK or WH/DG wire) and connect one meter lead to the test adapter (B).

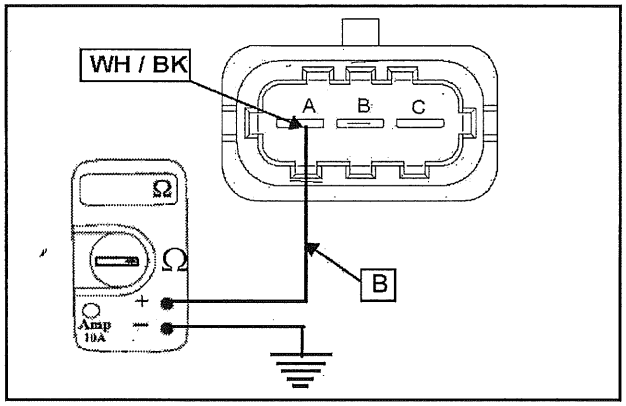

11. Connect the other meter lead to engine ground.
12. Place transmission in Neutral.
13. Turn ignition key ON and engine stop switch to RUN.
14. Crank engine with electric starter and watch bar graph on the Fluke 73 DMM. Bar graph should pulse while engine cranks, indicating a ground signal is present.

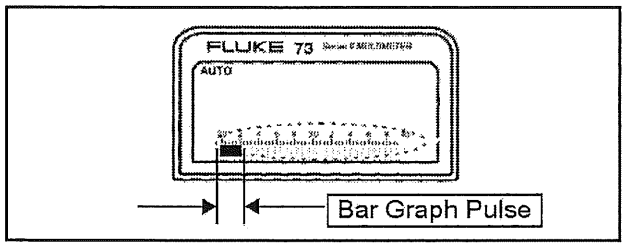

15. Repeat test on other outside wire of connector.

- If no pulse is present, test Crankshaft Position Sensor (Test 6).
- If signal is present on one wire and not the other, test related wiring and connections.
- If both signals are present and there was battery voltage on the VIO/Y wire (center terminal) but still no spark, test ignition coil windings. (Test 5).

IGNITION COIL RESISTANCE - TEST 5

Ignition Coil Primary Winding

1. Remove ignition coil (Ignition Coil Removal, page 17.4).
2. Select OHMS function of DMM.
3. Measure resistance between terminal 3 and terminal 2 on the coil. Compare to specification.
4. Measure resistance between terminal 1 and terminal 2 on the coil. Compare to specification.

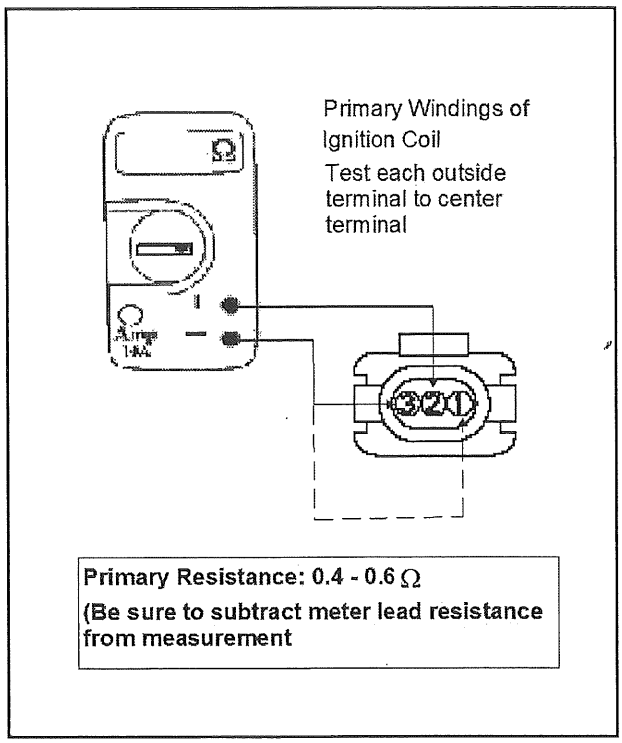

Ignition Coil Secondary Windings

5. Remove ignition coil (Ignition Coil Removal, page 17.4).
6. Select DIODE CHECK function of DMM.
7. Place red DMM lead on center terminal (#2) of coil primary and black lead on secondary terminal and record.
8. Move black DMM lead to the other secondary terminal and record. (Reading should be the same for both secondary windings).
9. Repeat measurements on each secondary coil with meter leads reversed.
10. Compare readings to specification. Resistance should be low with leads one way and OL with leads reversed.

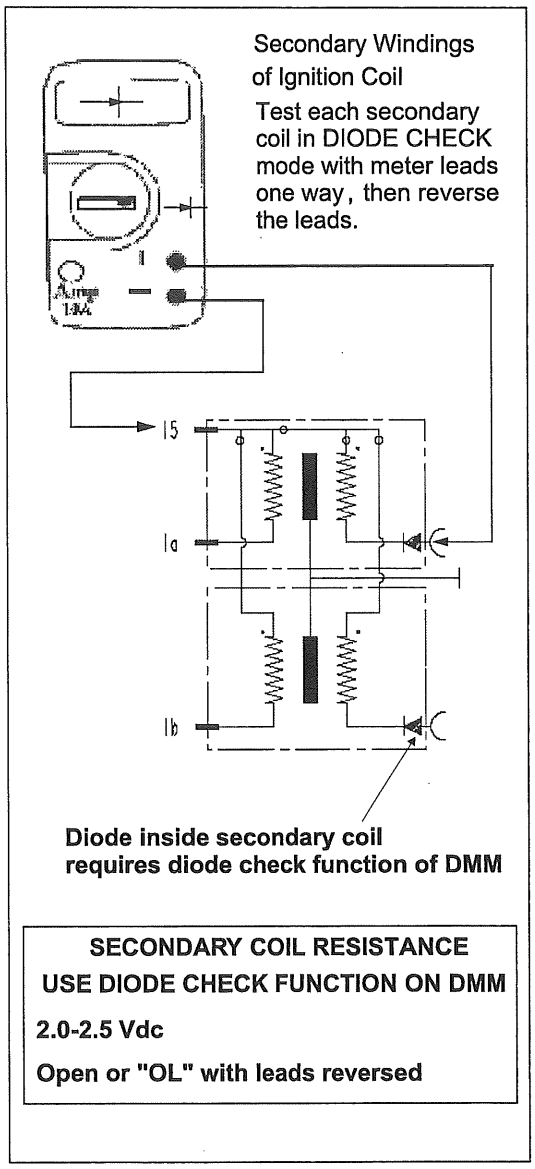

17

CRANKSHAFT POSITION SENSOR (CPS) RESISTANCE INSPECTION - TEST 6

NOTE

This test can also be performed at the ECM connector, to test the entire circuit with the sensor. See test 6A (Crank Position Sensor Circuit And Signal Test 6A, page 17.12).

1. Disconnect Crankshaft Position Sensor (connector is located at rear of engine).
2. Visually inspect sensor wire harness for damage, and loose or broken wires or connector pins.
3. Select OHMS function of DMM.
4. Measure resistance through CPS coil by connecting a test adapter lead (C) to sensor wires and to meter leads (D).

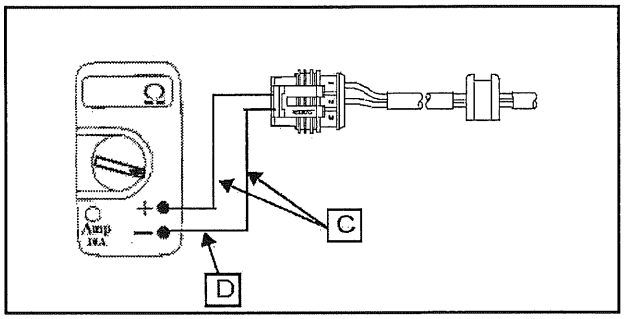

Specification: 280W @ 20°C, 68°F (+/- 20%)

5. Remove lower right engine cover (timing cover).
6. Visually inspect center pole (E) of crankshaft position sensor for damage or metal particles clinging to the magnet. Be sure dowel pins (F) are in place on the cover (or crankcase) and check for physical damage to sensor or timing wheel that may affect air gap.

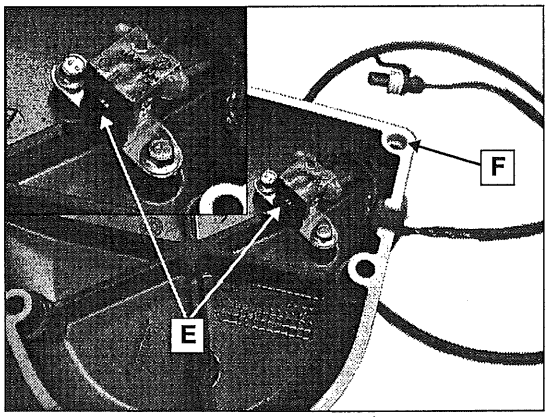

CRANK POSITION SENSOR CIRCUIT AND SIGNAL TEST 6A

NOTE

A test lead adapter kit is required to prevent connector pin, socket, or case damage.

Connector Test Lead Adapter Kit PV-43526 or suitable Fluke test adapter leads

1. Turn ignition key OFF.
2. Remove left side cover.
3. Remove ECM connector from ECM (ECM Connector Removal, page 5.48).
4. Select OHMS function on the DMM (W).
5. Connect test adapter leads to the DMM leads.
6. Place one test adapter lead in pin 57 and the other in pin 58 of the ECM connector (not the ECM). Compare resistance to specification.

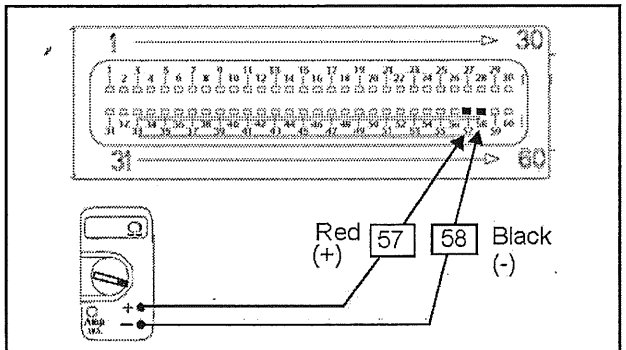

Specification: 280Ω @ 20°C, 68°F (+/- 20%)

CPS AC Signal Test

7. With leads connected as for the resistance test (pin 57 and 58 of the ECM connector), select Volts AC function on the DMM.
8. Turn engine over with electric starter and observe DMM display.

9. With spark plugs installed voltage reading will be erratic due to low rpm and pulsing nature of the signal. The numerical display will be erratic. Watch bar (A) at bottom of display to determine if a signal exists. Any fluctuating AC signal is correct for this test.

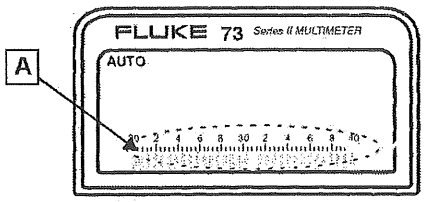

Meter on AC Volts Scale

10. Remove spark plugs from engine. Install spark plugs into spark plug caps and ground the spark plug electrodes securely to the engine.
11. Measure AC voltage signal from crank position sensor while turning engine over using electric starter with spark plugs out and compare to specification.

    Specification: 2-5 V AC (Spark Plugs Out)

CRANK POSITION SENSOR CIRCUIT CONTINUITY TEST 6B

1. Check all pin connectors between sensor and ECM for a good mechanical connection.
2. Inspect wiring for damage causing an open circuit.

GROUND CIRCUIT INSPECTION - TEST 7

1. Set DMM to OHMS.
2. Connect one meter lead to negative (-) post of battery.
3. Connect other meter lead to main ground locations. Refer to electrical schematic for locations.
4. At each ground test point, resistance should be less than .5 OHMS.

NOTES

CHAPTER 18
ELECTRIC STARTER

GENERAL....18.2
SAFETY INFORMATION....18.2
STARTER SYSTEM SPECIAL TOOLS....18.2
STARTER SYSTEM TORQUE SPECIFICATIONS....18.2
STARTER SPECIFICATIONS....18.3
DIAGNOSTICS....18.4
TROUBLESHOOTING FLOW CHART MENU....18.4
STARTER CIRCUIT DIAGRAM....18.5
TROUBLESHOOTING FLOW CHART 1....18.6
TROUBLESHOOTING FLOW CHART 2....18.7
TROUBLESHOOTING CHART 3....18.8
BATTERY INSPECTION & CHARGING PROCEDURES....18.8
BATTERY LOAD TEST....18.8
CIRCUIT / SWITCH TESTING....18.9
STARTER RELAY GROUND BYPASS CIRCUIT TEST....18.9
NEUTRAL SWITCH BYPASS TEST....18.9
CLUTCH SWITCH / CIRCUIT TEST....18.10
CLUTCH SWITCH REMOVAL....18.12
CLUTCH SWITCH INSTALLATION....18.12
STARTER RELAY TO STARTER MOTOR POSITIVE CABLE BYPASS TEST....18.12
STARTER RELAY POSITIVE CIRCUIT TEST....18.13
STARTER RELAY BYPASS TEST....18.13
STARTER RELAY TO STARTER MOTOR POSITIVE CABLE BYPASS TEST....18.14
POSITIVE SIDE VOLTAGE DROP TEST....18.15
NEGATIVE CABLE BYPASS TEST....18.17
NEGATIVE SIDE VOLTAGE DROP TEST....18.18
STARTER CURRENT DRAW TEST....18.20
STARTER MOTOR REMOVAL....18.22
STARTER MOTOR INSTALLATION....18.22
STARTER CLUTCH REMOVAL....18.22

GENERAL

SAFETY INFORMATION

⚠ WARNING

Always disconnect the battery (negative terminal first) before servicing the starter motor.

- Inspect the condition of the battery before troubleshooting the starter system. Also inspect main engine ground (on crankcase - upper left rear corner) and battery cable connections.

STARTER SYSTEM SPECIAL TOOLS

SPECIAL TOOL	PART NUMBER
Digital Multi-Meter	PV-43546
Optional Amp Meter Inductive Clamp	PV-39617
Rotor Puller (Flywheel)	PV-43533
Engine Stop Tool	PV-43502
Connector Test Adapter Kit	PV-43526

STARTER SYSTEM TORQUE SPECIFICATIONS

DESCRIPTION	TORQUE NM	TORQUE FT-LBS (IN-LB)
Bearing Cover Screws (starter gear cover)	10 Nm	(85 in-lb)
Electrical Terminal (+) to Starter Motor	6.8 Nm	(60 in-lb)
Gear Position Switch (to crankcase)	2.8 Nm	(25 in-lb)
Positive Cable (+) to Motor Terminal	6.8 Nm	(60 in-lb)
Primary Drive Gear Bolts (to Crankshaft)	41 Nm	30 ft-lbs
Regulator / Rectifier Screws	10 Nm	(85 in-lb)
Rotor Bolt (Flywheel)	102 Nm	75 ft-lbs
Starter Motor to Crankcase Bolts	30 Nm	22 ft-lbs
Starter Motor Case Screws	10 Nm	(85 in-lb)

STARTER SPECIFICATIONS

ITEM	STANDARD	SERVICE LIMIT
Battery Voltage (Open Circuit Voltage)	Above 12.5 Vdc	-
Commutator Resistance:		
Between Any Two Bars	Continuity (0 Ohms)	-
Any Commutator Bar to Armature Shaft	Ω (OL on Fluke™ 73)	-
Battery Input Terminal Resistance to Insulated Brush	Continuity (0 Ohms)	-
Battery Cable Terminal Resistance to Motor Case	Infinity (OL on Fluke™ 73)	-
Starter Motor Brush Length	13 mm ± 0.5 mm (0.512 ± 0.020")	6.5 mm (0.255")
Starter Motor Operating Amp Draw	90-120 Amps	Use inductive ammeter
Starter Motor No Load Amp Draw (Bench Test)	30-40 Amps after initial surge	-
Starter Torque Limit Clutch Break-Away Torque	50 ft-lbs when new	35-45 ft-lbs after break-in
Voltage Drop Allowed: Each Connection - Pos Circuit	0.2 V DC (200 millivolts)	-
Voltage Drop Allowed: Each Connection - Neg Circuit	0.2 V DC (200 millivolts)	-
Total Voltage Drop Allowed - Pos Side Of Starter	0.3 V DC (300 millivolts)	-
Total Voltage Drop Allowed - Neg Side Of Starter	0.3 V DC (300 millivolts)	-

DIAGNOSTICS

TROUBLESHOOTING FLOW CHART MENU

SYMPTOM	POSSIBLE CAUSE	REFER TO:
Starter motor does not turn with transmission in neutral. Turns with clutch pulled in.	Neutral switch or circuit malfunction	Test Neutral Switch (Neutral Switch Bypass Test, page 18.9)
Starter motor does not turn with transmission in gear and clutch lever pulled in. Turns with transmission in neutral.	Clutch switch or circuit malfunction, Reverse Switch (if equipped) or circuit malfunction.	Test Clutch Switch (Clutch Switch / Circuit Test, page 18.10) and reverse switch Reverse System Diagnostics, page 19.29.
Starter motor will not turn	Low battery voltage. Starter button faulty. Poor cable connections. Main engine ground loose (front left corner of crankcase under the electrical cover).	See Troubleshooting Flow Chart 1 (Troubleshooting Flow Chart 1, page 18.6)
Starter motor turns slowly. Engine may or may not start.	Low battery. Faulty starter motor or drive mechanism. Engine mechanical problem.	See Troubleshooting Flow Chart 2 (Troubleshooting Flow Chart 2, page 18.7)
Starter motor turns, but engine does not turn.	Starter torque limit clutch slipping (Chapter 9).	See Troubleshooting Flow Chart 3 (Troubleshooting Chart 3, page 18.8)
Starter motor turns at normal speed, but engine does not start.	Ignition Problem	Ignition System Test Flowchart, page 17.7
	Engine Problem	Chapter 7-10
	Fuel Delivery Problem	Fuel System Troubleshooting, page 5.67

STARTER CIRCUIT DIAGRAM

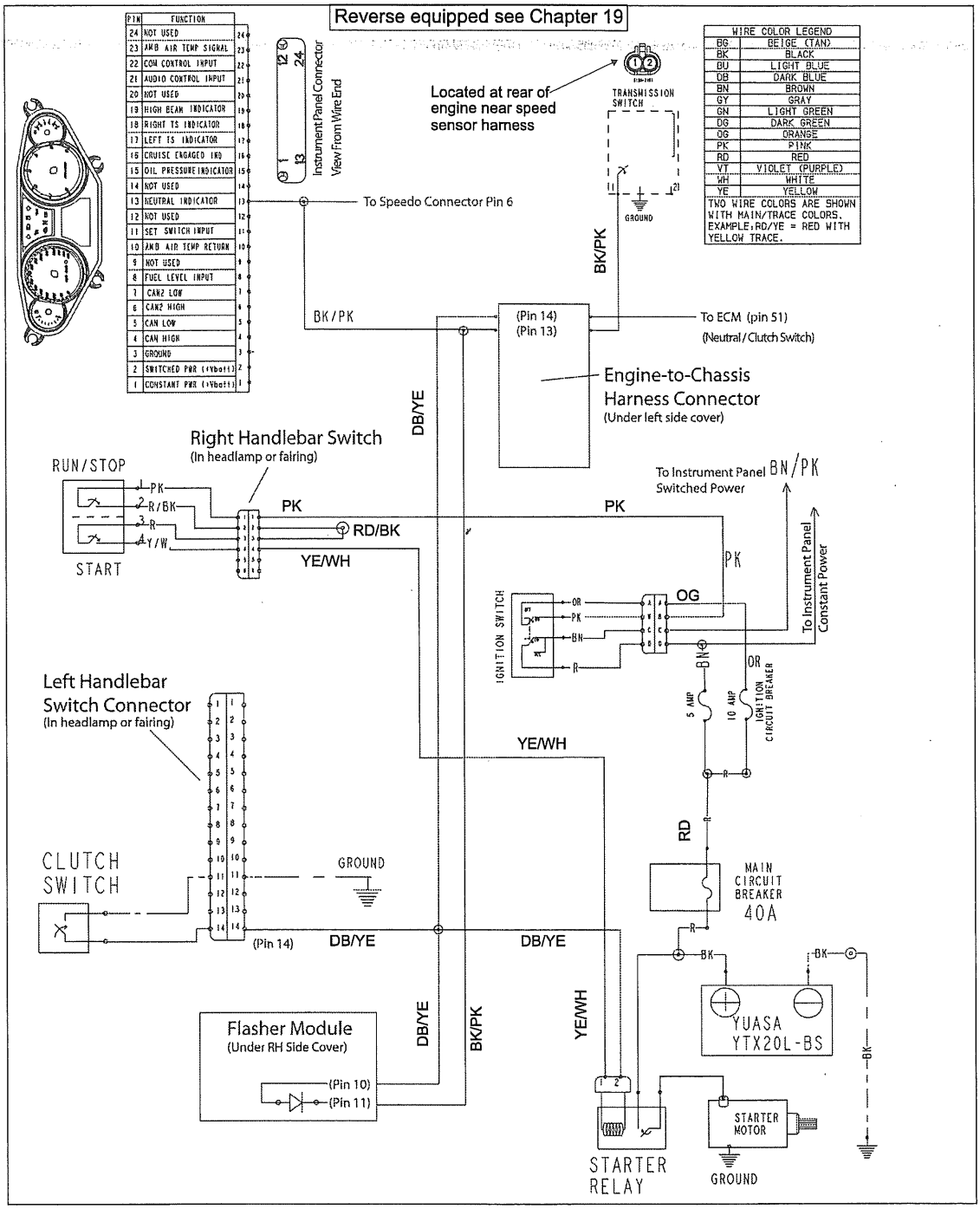

18

TROUBLESHOOTING FLOW CHART 1

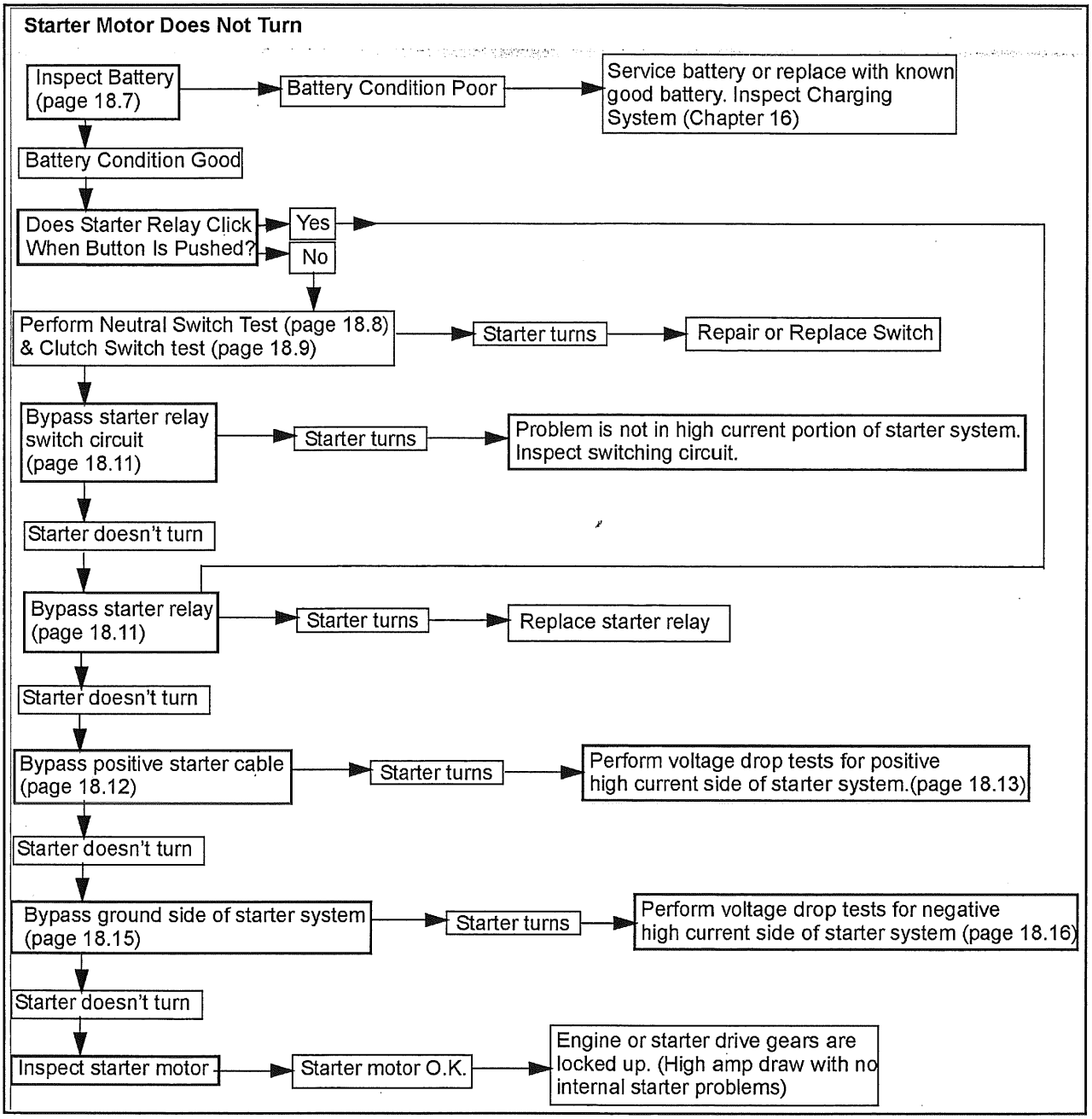

⚠ WARNING

Ensure that motorcycle is secure and transmission is in neutral for all tests.

CAUTION

Inspect fuses and make sure battery is fully charged before inspecting starter system.

9927627 - 2012 – 2017 Cross Roads, Hard-Ball, Cross Country, Magnum Service Manual
© Copyright

TROUBLESHOOTING FLOW CHART 2

Starter Motor Turns Slowly, Engine May or May Not Start

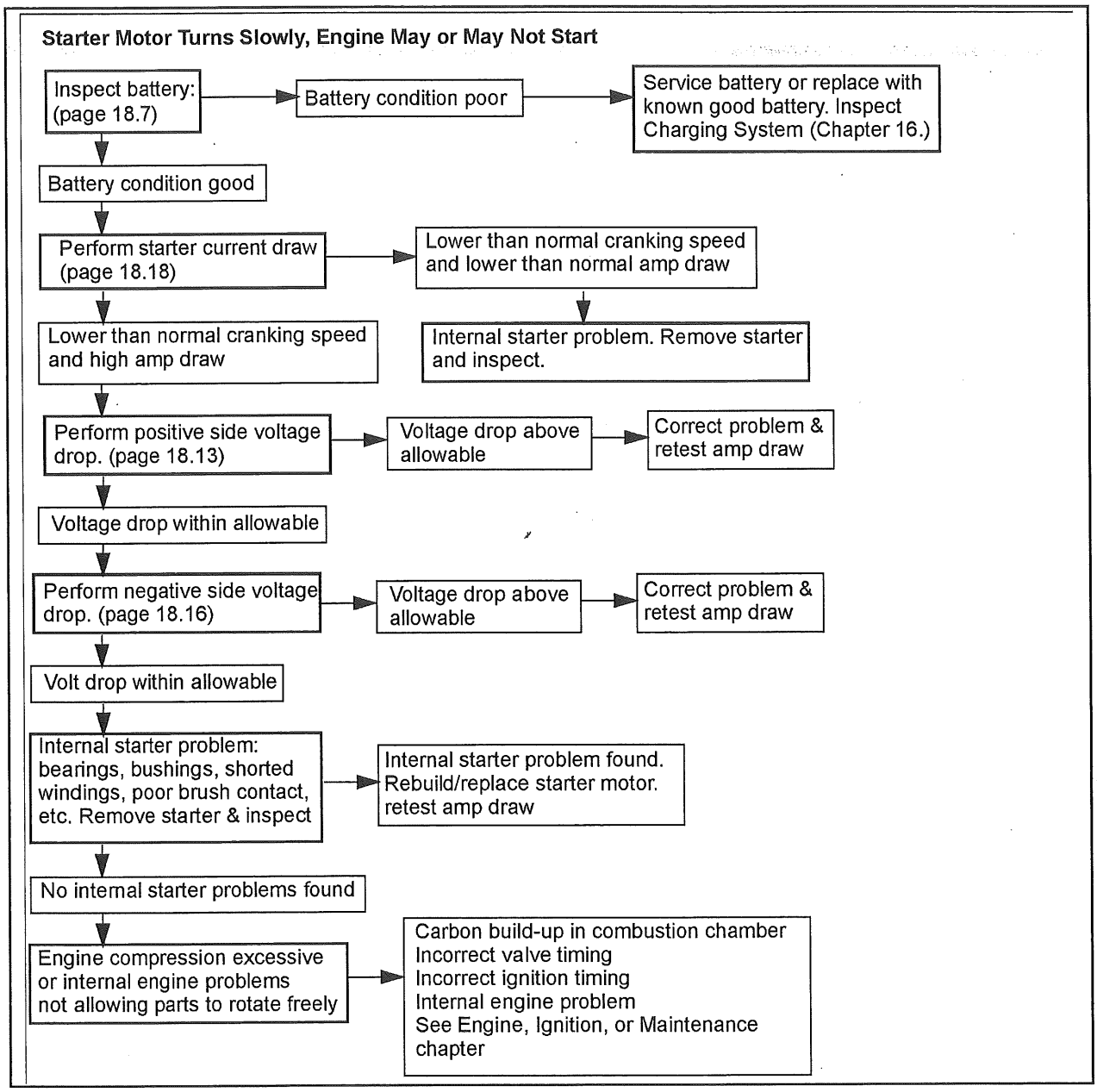

NOTE

Diagnostics require a Digital Multi Meter with a high current shunt or an inductive ammeter clamp.

18

TROUBLESHOOTING CHART 3

SYMPTOM	POSSIBLE CAUSE	POSSIBLE REASON AND/ OR INSPECTION NEEDED
Starter motor turns, but engine does not turn. The starter motor can be heard spinning.	Starter clutch malfunction.	Refer to Clutch, Primary / Shift Chapter
	Starter torque limit clutch slipping.	
	Starter gears damage.	

BATTERY INSPECTION & CHARGING PROCEDURES

1. Refer to Battery Removal, page 2.22.

BATTERY LOAD TEST

1. Load test battery using a commercially available battery load tester. Follow the battery load tester manufacturer instructions.

NOTE

Although not as conclusive, the following test can be used to direct troubleshooting efforts if a battery load tester is not readily available.

2. Charge battery until open circuit voltage is above 12.5 Vdc (Battery Inspection & Charging Procedures, page 18.8).
3. Install battery and connect battery cables.
4. Connect digital multimeter to battery and keep it connected for duration of test.
5. Turn ignition key on and move head light high beam switch to High Beam for 1 minute (without the engine running).

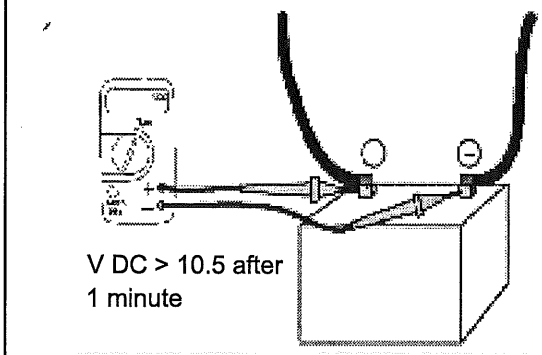

6. Turn ignition off. Measure battery voltage.
7. If battery voltage drops below 10.5 Vdc, re-charge and re-test battery or replace it.

CIRCUIT / SWITCH TESTING

STARTER RELAY GROUND BYPASS CIRCUIT TEST

⚠ WARNING

Verify that motorcycle is secure and that transmission is in neutral for the following inspection.

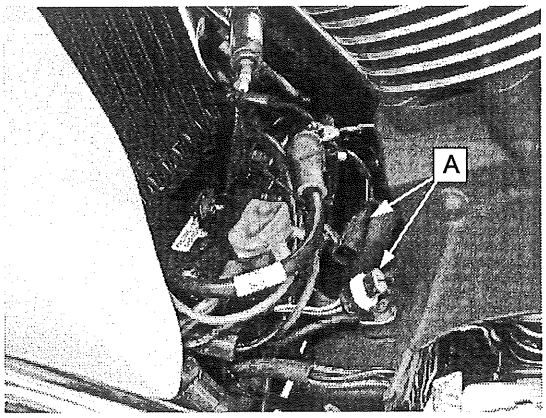

1. Shift transmission to Neutral.

NOTE

Shifting transmission to neutral or pulling in the clutch lever provides a ground path for the starter relay. This test will temporarily bypass these components. Refer to Starter Circuit Diagram on Starter Circuit Diagram, page 18.5.

2. Back-probe the Blue / Yellow wire (A) at the solenoid connector (shown disconnected) and connect it to a ground (Solenoid connector must remain assembled).
3. Turn ignition switch ON and place engine stop switch in RUN position.
4. Press starter button. If starter motor turns, inspect clutch switch (Clutch Switch / Circuit Test, page 18.10) and gear position switch Neutral Switch Bypass Test, page 18.9).
5. If starter motor does not turn, inspect button by performing the STARTER RELAY POSITIVE CIRCUIT TEST on Starter Relay Positive Circuit Test, page 18.13.

NEUTRAL SWITCH BYPASS TEST

The symptom of a faulty neutral indicator switch / circuit is:

- Starter motor does not operate when transmission is in neutral with clutch lever released but *does* operate with the clutch lever pulled in.

1. Turn ignition switch on and place engine stop switch in the RUN position.
2. Shift transmission into Neutral.
3. Observe neutral indicator light.
4. If indicator is not working with transmission in neutral:

- Disconnect neutral indicator switch (B).

NOTE

When the Neutral Indicator Switch is disconnected, the multi-function display (MFD) will display (—) regardless of gear position (with Key ON).

- Connect Black/Pink of *hamess* side connector pin to ground on engine (not switch side of connector) with a jumper lead. This provides a path to ground for the neutral light.

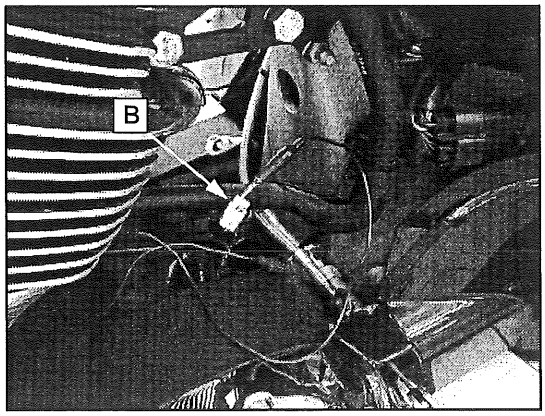

5. If the neutral lamp comes on, the neutral indicator switch or wiring between connector and switch is at fault. Continue to Step 6 to test the neutral indicator switch.
6. Set meter to measure resistance.

7. Place one meter lead on Black/Pink wire on *switch* side of connector.

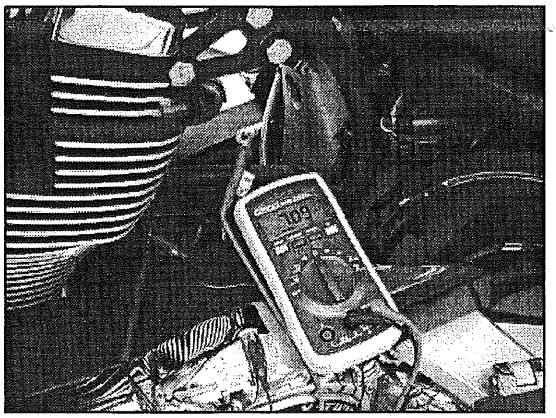

8. Connect the other lead to engine ground.
9. Compare reading to Table below.
10. Replace neutral switch or repair wiring as necessary.
11. If neutral switch is working correctly and neutral indicator did not light with the harness wire grounded, inspect neutral lamp circuit wiring and connectors for an open circuit.

    If switch is faulty, refer to Neutral Indicator Switch Removal / Installation (NEUTRAL INDICATOR SWITCH REMOVAL, page 19.14).

Testing Neutral Portion of Neutral Indicator Switch

GEAR POSITION	METER PROBE # 1	METER PROBE # 2	OHMMETER READING*
Neutral	Black/Pink (switch side of connector)	Crankcase (ground)	< .5 Ω
Any Gear - Other Than Neutral	Black/Pink (switch side of connector)	Crankcase (ground)	OL
* Be sure to subtract meter probe resistance from resistance reading			

CLUTCH SWITCH / CIRCUIT TEST

Refer to Starter Circuit Diagram on Starter Circuit Diagram, page 18.5.

Symptom of a faulty clutch switch circuit:

- Starter motor will not operate with transmission in gear and clutch lever pulled in. Starter *operates* with transmission in neutral.

Use an ohmmeter to determine if continuity is present when the switch is closed (lever pulled in).

1. Transmission can be in neutral or in any gear.
2. Separate the 2 pin connector (A) from starter solenoid.
3. Set meter to measure ohms (W).
4. Connect red (+) lead of DMM to Blue/Yellow wire in connector on harness side using a test probe (A) from Victory Connector Test Kit PV-43526.
5. Connect black meter lead to battery negative post or ground.

6. Operate clutch lever while observing meter display:

- Pull clutch lever to the handlebar. Meter should display continuity or very low resistance (less than 1 ohm) when the clutch switch closes.

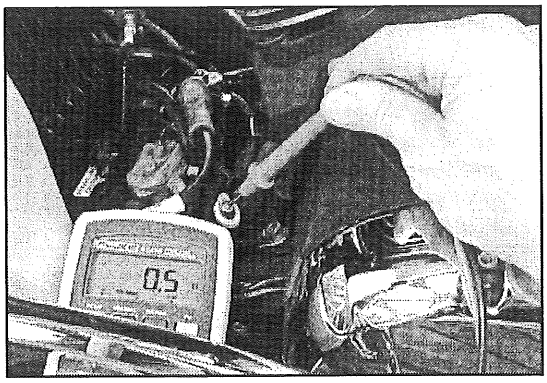

- Release clutch lever, meter should display OL (open line).

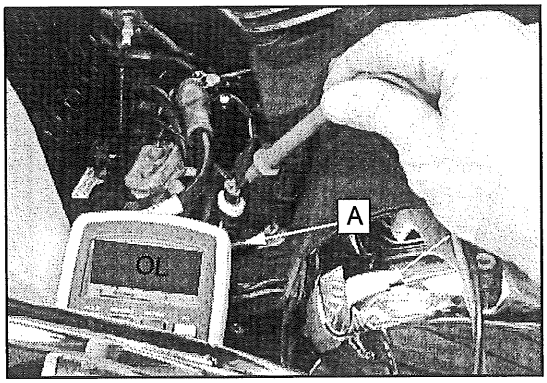

7. If clutch switch does not test as described, inspect clutch switch, clutch switch wiring or mounting of switch to clutch lever for faults.
8. Disconnect switch wiring connector at handlebar.

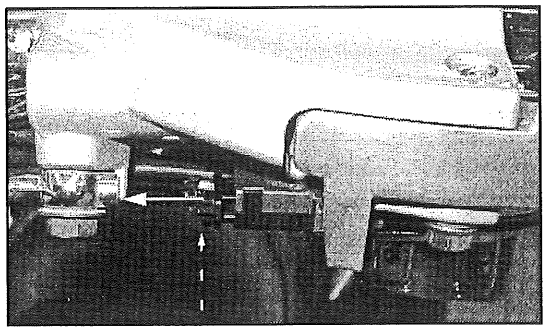

9. Connect ohmmeter across the *outer 2 terminals* of clutch switch:

- Test for continuity when clutch lever is pulled to handlebar.
- Test for high resistance with lever released.

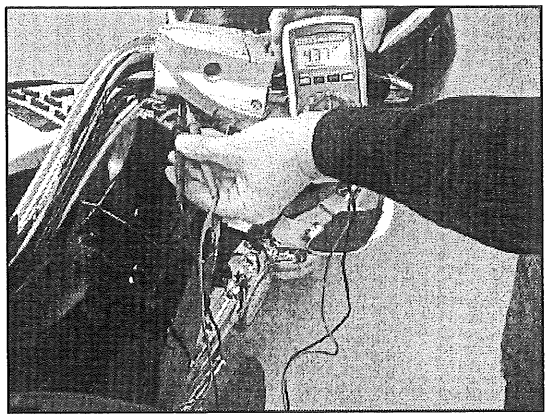

10. If switch tests correctly at connector, check circuit between clutch lever switch and starter relay, including the LH bar switch connector.
11. If switch fails test, inspect mounting of switch.
12. If switch is mounted correctly and physically operates but does not open and close electrically, replace switch.

18

CLUTCH SWITCH REMOVAL

1. Disconnect wire harness at the switch (B).
2. Remove retaining screw (C). Pull clutch lever and secure it to the handlebar. Remove switch.

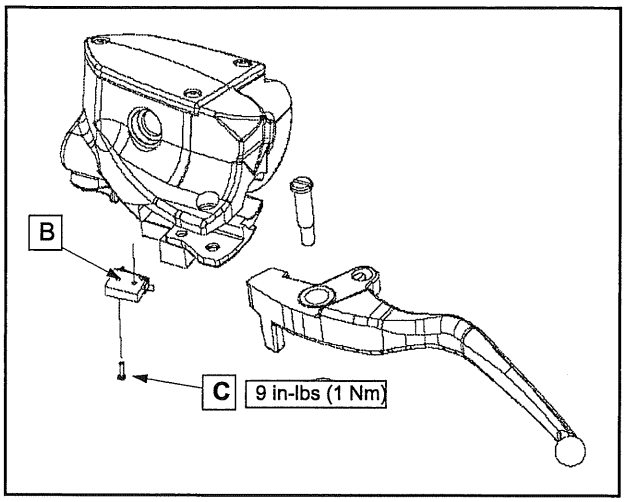

CLUTCH SWITCH INSTALLATION

1. Pull clutch lever and secure to handlebar.
2. Install switch and retaining screw. Torque to specification.
3. Connect wire harness.
4. Release clutch handle.
5. Verify proper operation.

STARTER RELAY TO STARTER MOTOR POSITIVE CABLE BYPASS TEST

⚠ WARNING

Secure motorcycle and place transmission in neutral for the following test.

⚠ WARNING

The following test involves high current, heat and possible sparks. Wear a face shield and approved safety glasses while doing the following test.

1. Place the transmission in neutral.
2. Connect one clamp of a heavy-duty, automotive remote starter switch to positive terminal lug at starter motor.

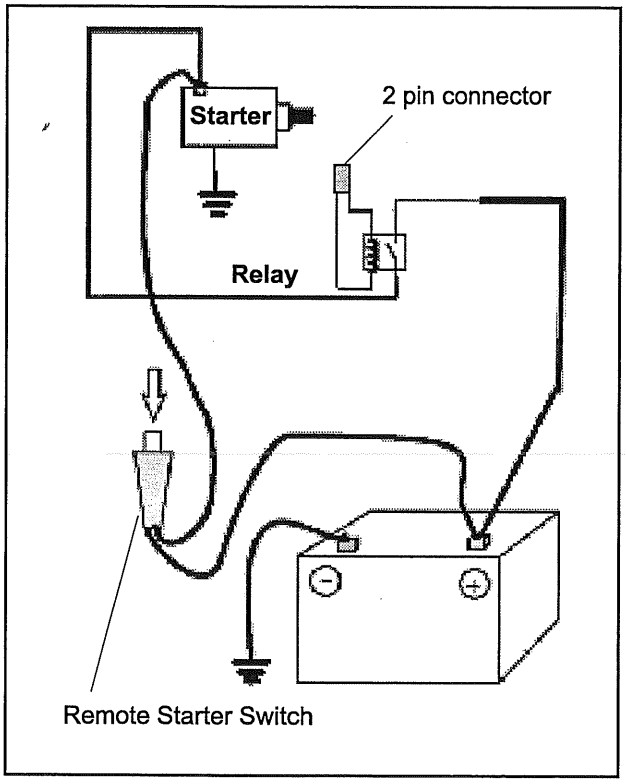

3. Connect other clamp of remote starter switch to positive terminal of battery.

⚠ WARNING

Do not allow any part of the jumper cable clamp to touch the chassis or any other ground. Be sure transmission is in neutral.

4. Make sure transmission is in neutral, key switch off and stop switch off.

5. Pull in clutch lever and depress the remote starter switch momentarily.
6. If starter turns, there is excessive resistance in the positive, high current side of the starter system. Go to Positive Side Voltage Drop Test.
7. If starter does not turn, go to Negative Cable Bypass Test.

STARTER RELAY POSITIVE CIRCUIT TEST

⚠ WARNING

Secure motorcycle and place transmission in neutral for the following test.

Refer to Starter Circuit Diagram on Starter Circuit Diagram, page 18.5

1. Place the transmission in neutral.
2. Remove electrical cover.
3. Separate connector at starter relay.
4. Set DMM to **DC Volts**.
5. Check battery voltage by testing across battery terminals. Voltage reading should be at or above 12.5 Vdc.
6. Connect red (+) lead of DMM to the Yellow / White wire of the starter relay wiring harness connector (A) using a test probe from Victory Connector Test Kit PV 43526.

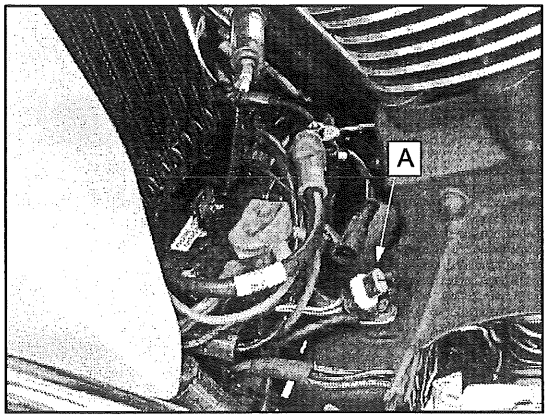

7. Connect DMM black lead to battery negative post.
8. Turn ignition key ON and Engine Stop Switch to RUN position.
9. Press starter button. The meter should display battery voltage. If voltage is more than .2 volts below battery voltage, inspect the power supply circuit.
10. If no voltage is present on the wire, check for power on pin 3 of the right handlebar switch connector (located under the console in front of the handlebars).
11. If power is present on the BK/R wire (pin 3) press the start button to determine if power is supplied to the
12. Y/W wire. Check for good continuity through the start button (pin 3 to pin 4 on the switch side connector) and for good continuity from switch to starter relay connector on the Y/W wire.

STARTER RELAY BYPASS TEST

⚠ WARNING

Secure motorcycle and place transmission in neutral for the following test. Be sure the transmission is in neutral!

⚠ WARNING

The following test involves high current, heat and possible sparks. Wear a face shield and approved safety glasses while doing the following test. Only use the tool recommended to prevent excessive heat and possible burns.

1. Place the transmission in neutral.

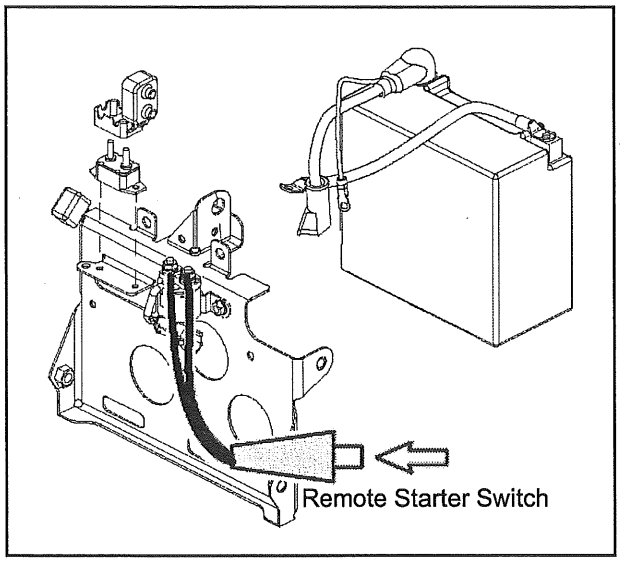

2. Remove the electrical cover to access the solenoid on the back of the battery box.

18

3. Connect one lead of a remote starter switch to one of the main battery terminal posts on the relay and the other lead to the other main terminal post on the relay.

CAUTION

Do not allow the metal clips of the remote starter relay switch to touch each other and short out.

4. Depress button on remote starter switch.
5. If starter motor operates, and the Positive Circuit Test, Clutch Switch Test, and Neutral Switch Test have passed inspection, replace the relay.
6. If the starter motor does not operate, inspect cables by performing tests on following pages.

STARTER RELAY TO STARTER MOTOR POSITIVE CABLE BYPASS TEST

⚠ WARNING

Secure motorcycle and place transmission in neutral for the following test.

⚠ WARNING

The following test involves high current, heat and possible sparks. Wear a face shield and approved safety glasses while doing the following test.

1. Place the transmission in neutral.

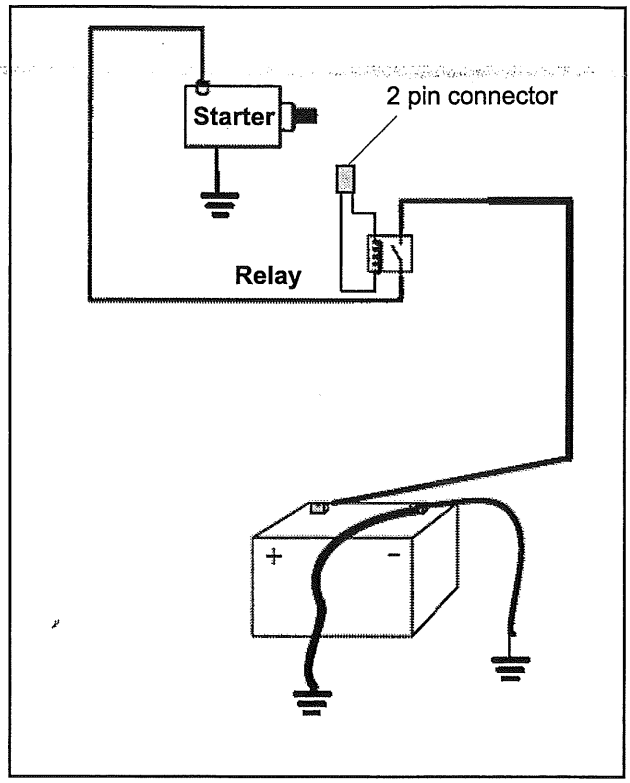

2. Connect one clamp of a heavy-duty, automotive remote starter switch to positive terminal lug at starter motor.
3. Connect other clamp of remote starter switch to positive terminal of battery.

⚠ WARNING

Do not allow any part of the jumper cable clamp to touch the chassis or any other ground. Be sure transmission is in neutral.

4. Make sure transmission is in neutral, key switch off and stop switch off.
5. Pull in clutch lever and depress the remote starter switch momentarily.
6. If starter turns, there is excessive resistance in the positive, high current side of the starter system. Go to Positive Side Voltage Drop Test.
7. If starter does not turn, go to Negative Cable Bypass Test.

POSITIVE SIDE VOLTAGE DROP TEST

Symptoms: Starter motor does not turn or turns slowly when starter relay is bypassed. Starter motor works correctly when performing Starter Relay Positive Cable Bypass Test.

CAUTION

The ignition system must be disabled when doing voltage drop tests, if engine starts it will be difficult to measure voltage drop. To disable ignition system quickly and safely, observe the following steps.

1. Remove spark plug caps.
2. Install test spark plugs or plugs with the gap CLOSED into plug caps.
3. Ground spark plug center electrode to engine.

NOTE

*The total voltage drop between the battery (+) and starter motor must not exceed 0.3 Vdc (300 mV).

Positive Side Voltage Drop Tests

LOCATION	ALLOWABLE VOLTAGE DROP
Battery (+) To Starter (+)	0.3 Vdc (300 mV)
Battery (+) to Battery Side of Relay	0.2 Vdc (200 mV)*
Across Relay	0.2 Vdc (200 mV)*
Starter (+) to Starter Side of Relay	0.2 Vdc (200 mV)*

CAUTION

Only operate starter long enough to stabilize the reading on the DMM (less than 10 seconds). Let starter motor cool down between each voltage drop test to prevent damage to starter motor.

4. Place transmission in neutral.

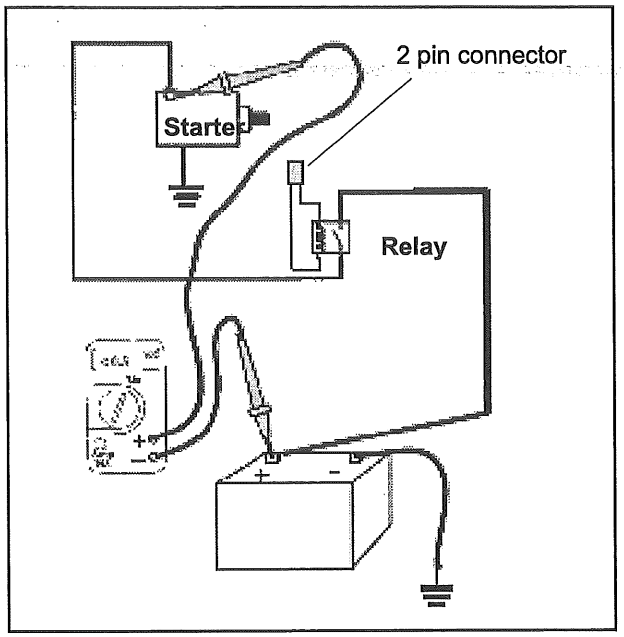

5. Set DMM to DC Volts.
6. Place one lead of DMM to positive battery post.
7. Place the other lead of the DMM to starter motor positive terminal screw.
8. Turn ignition switch on, turn engine stop switch to run position. Pull in clutch lever.
9. Operate the starter normally (no jumper cables in place) and observe meter display.
10. If DMM reads more than 0.3 Vdc (300 mV DC) when the starter motor is engaged, it indicates that there is excessive resistance in the starter's battery positive path. Continue with the following tests to isolate each section of the positive path and observe the voltage drop with DMM leads placed as indicated.

11. Place one lead of DMM to positive battery post. Ensure DMM is set to read DC Volts.

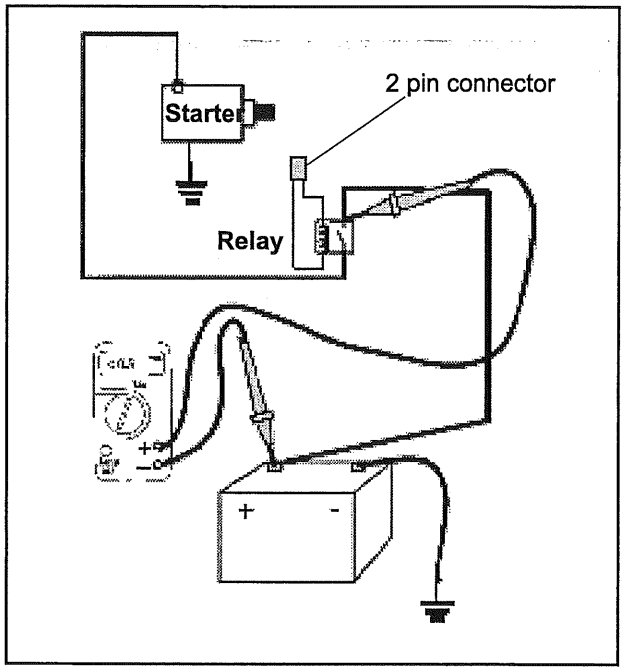

12. Place other lead of DMM to relay terminal leading to battery.
13. Engage starter and observe meter display, it should read less than 0.2 Vdc (200 mV DC).
14. If voltage drop is observed, the cable, connection at the battery or connection at the relay is causing resistance and must be corrected.
15. Inspect cable ends for corrosion where cable is connected to terminal lugs.
16. Remove cable. Set the DMM to read Ohms.
17. Place DMM leads at both ends of the cable and measure the cable's resistance. The resistance should be 0 ohms. Replace cable if necessary.
18. Inspect battery post, battery cable lug and relay lug for corrosion or looseness.

NOTE

Corrosion has resistance that limits or stops the flow of current to the starter motor.

19. If corrosion is found, wash all connections with a solution of baking soda and water, wire brush all contact areas, apply a light film of dielectric grease to the hardware and tighten connections. Retest to verify problem has been corrected.

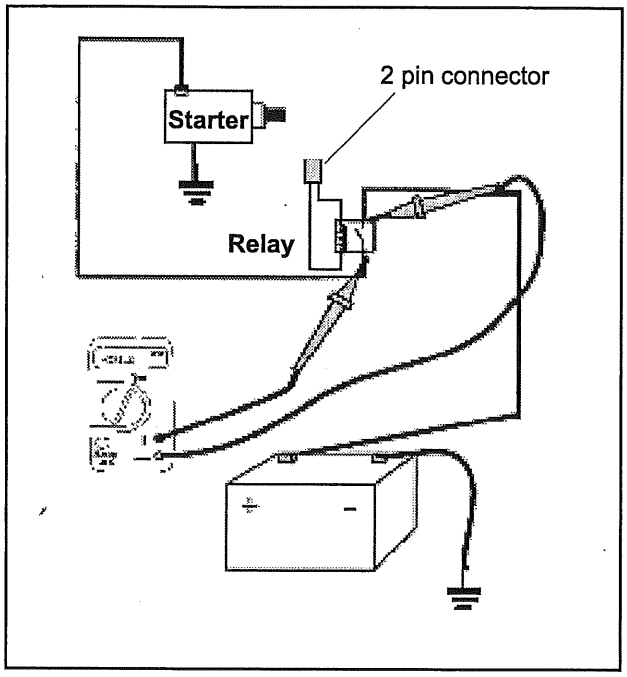

20. Place one lead of DMM to battery side of relay. Reset DMM to read DC Volts if necessary.
21. Place other lead to starter motor side of relay.
22. Engage starter and observe meter display; it should read less than 0.2 Vdc (200 mV DC).
23. If voltage drop is observed, remove cables and clean cable terminals and relay terminals. Reattach cables. Retest voltage drop.
24. If voltage drop is still observed through the relay, replace relay.

25. Place one lead of DMM to starter motor side of relay. Ensure DMM is set to read Volts DC.

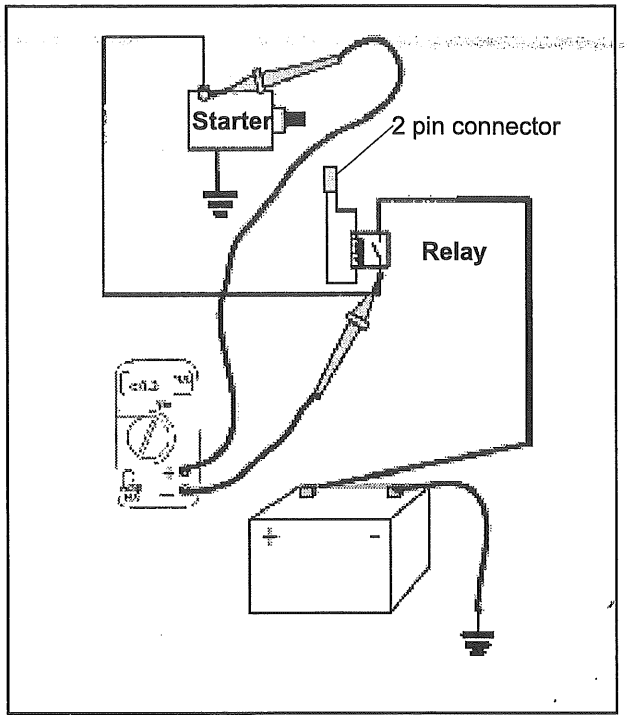

26. Place other lead of DMM to starter motor positive terminal.
27. Engage starter and observe meter display.
28. If voltage drop is observed, cable connection at relay or connection at starter motor is causing resistance and must be corrected.
29. Inspect cable ends for corrosion where cable is connected to terminal lugs.
30. Remove cable. Set DMM to read Ohms.
31. Place DMM leads at both ends of cable and measure cable resistance. The resistance should be 0 ohms. Replace cable if necessary. Remember to subtract test lead resistance.
32. Inspect starter cable lug and relay lug for corrosion or looseness.
33. If corrosion is found, wash all connections with a solution of baking soda and water, wire brush all contact areas, apply a light film of dielectric grease to hardware and tighten connections. Retest to verify problem has been corrected.

NEGATIVE CABLE BYPASS TEST

1. Place transmission in neutral.

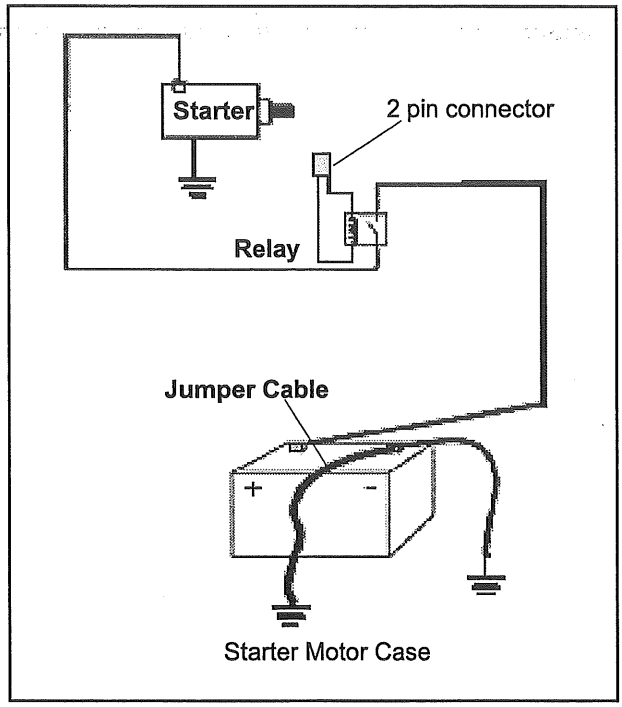

2. Remove electrical cover.
3. Connect one clamp of an automotive type jumper cable (heavy gauge jumper cable) to battery negative post.
4. Connect other end of jumper cable to a good ground location on starter motor body.
5. Make sure transmission is in neutral. Turn ignition key and stop switch on. Pull clutch lever in and attempt to start motorcycle.
6. If starter motor turns, there is excessive resistance in the negative, high current side of the starter system. Perform Negative Side Voltage Drop Test.
7. If starter does not turn and all troubleshooting steps have led to this test, replace starter motor.

NEGATIVE SIDE VOLTAGE DROP TEST

LOCATION	ALLOWABLE VOLTAGE DROP
Battery (-) To Starter Body (-)	0.3 Volts DC (300 mV)
Battery (-) to Battery Cable Ground Connection At Engine	0.2 Volts DC (200 mV)*
Battery Cable Ground Connection To Starter Body (-)	0.2 Volts DC (200 mV)*

NOTE

*The total voltage drop of these two items must not exceed 0.3 Volts DC (300 mV).

CAUTION

Only operate the starter long enough to stabilize the reading on the DMM (less than 10 seconds running time). Let starter motor cool down between each voltage drop tests to prevent damage to starter motor.

Disable the ignition system so engine will not start during this test.

- Remove spark plug caps.
- Install test spark plugs or plugs with the gap closed into plug caps.
- Ground center electrode of spark plugs to engine.

1. Place transmission in neutral.

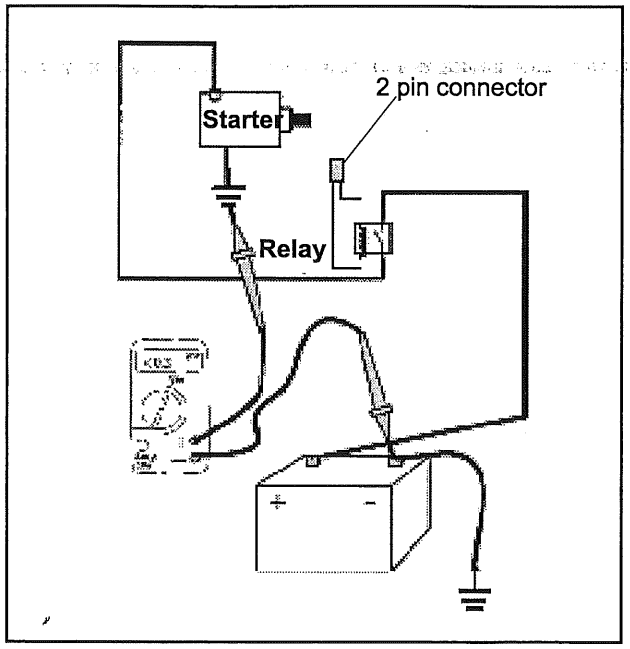

2. Set DMM to DC Volts.
3. Place one lead of DMM to negative battery post.
4. Place other lead of DMM to a clean ground on starter motor body.
5. Turn ignition switch ON and engine stop switch to RUN position. Pull clutch lever in.
6. Operate starter normally (no jumper cables in place) and observe meter display.
7. If DMM reads more than 0.3 Volts DC when starter motor is engaged, it indicates that there is excessive resistance in the starter's battery negative path. Continue with the following tests to isolate each section of the negative path and observe the voltage drop with DMM leads placed as indicated.
8. Place one lead of the DMM to the negative battery post. Ensure that the DMM is set to read DC Volts.
9. Place the other lead of the DMM to the battery cable engine ground connection.

10. Engage the starter and observe the meter display, it should read less than 0.2 Volts DC (200 mV DC).

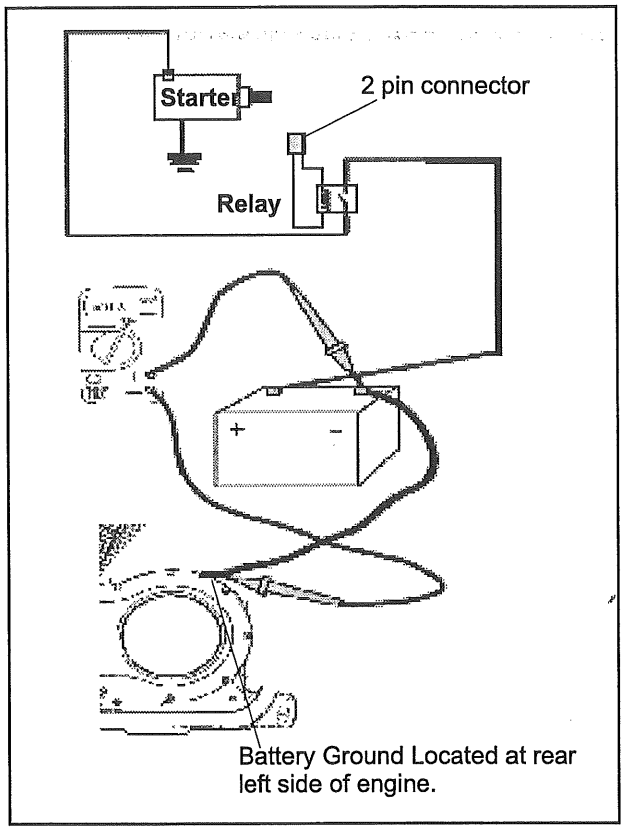

11. If voltage drop is observed, the cable, connection at the battery, connection at the engine or mounting surface of the starter motor body is causing resistance and must be corrected.
12. Inspect the cable ends for corrosion where cable is connected to battery or engine.
13. Remove the cable. Set the DMM to read Ohms.
14. Place the DMM leads at both ends of the cable and measure the cable's resistance. The resistance should be 0 ohms. Remember to subtract meter lead resistance. Replace the cable if necessary.
15. Inspect the battery post, battery cable lug and engine battery cable mount for corrosion or looseness.
16. If corrosion is found, wash all connections with a solution of baking soda and water, wire brush all contact areas, apply a light film of dielectric grease to the hardware and tighten connections. Retest to verify problem has been corrected.
17. Place one lead of DMM to battery cable mount at engine. Reset the DMM to read DC Volts if necessary.
18. Place the other lead on starter motor body.
19. Engage the starter and observe the meter display, it should read less than 0.2 Volts DC (200 mV DC).
20. If voltage drop is observed, there is resistance between the battery cable connection at engine and the mounting surfaces of the starter motor. While this would be unusual, it is possible.

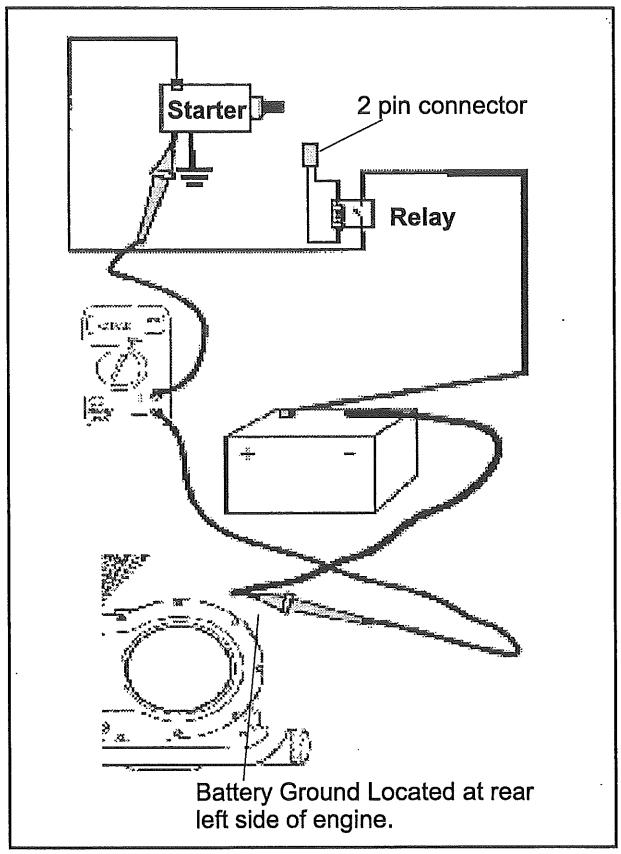

21. Remove and clean the connection between ground battery cable and engine.
22. Remove the starter and ensure that the starter is making firm contact with engine. Ensure that the starter mounting bolts are tight.
23. If corrosion is found, wash all connections with a solution of baking soda and water, wire brush all contact areas, apply a light film of dielectric grease to the hardware and tighten connections. Retest to verify problem has been corrected.

STARTER CURRENT DRAW TEST

⚠ WARNING

Do not allow any part of the jumper cable clamp to touch the chassis or any other ground.

CAUTION

Disable the ignition system so that the engine will not start during this test. Remove spark plug caps.Install test spark plugs into plug caps.Ground spark plugs against engine.

1. Inspect the battery (see Battery Inspection, page 2.22). Charge or replace battery as necessary before proceeding.
2. Place transmission in neutral.
3. Position an inductive ammeter clamp on battery positive cable.

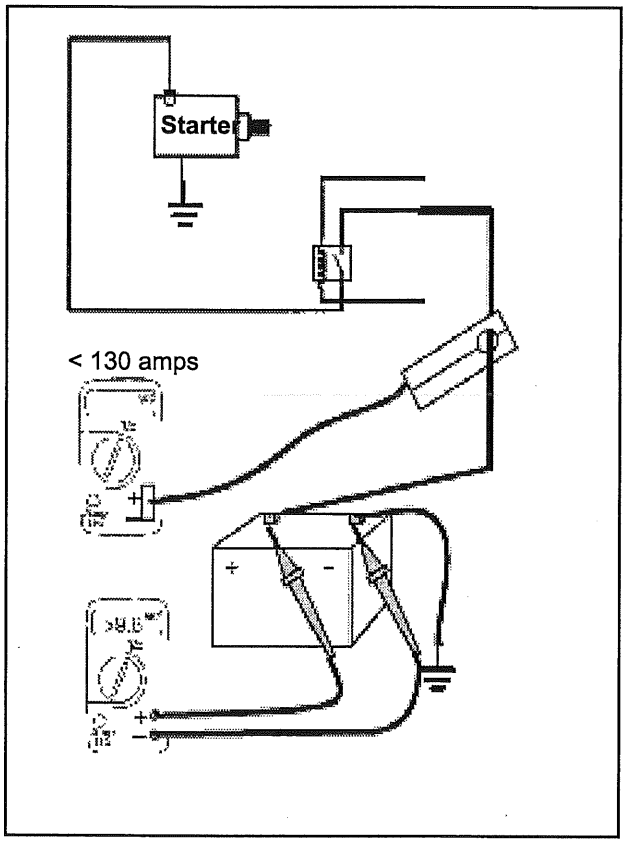

4. Set DMM to Volts DC scale and connect red lead of meter to positive post of battery.
5. Connect black lead of meter to negative post of battery.
6. Turn ignition switch on and observe ammeter. It should register negative amps. If it does not, turn the ammeter probe around.
7. Make sure ignition switch is on, engine stop switch is in the run position, transmission is in neutral, clutch lever pulled in and that the ignition system is disabled.
8. Press starter switch and crank starter for about 5 seconds and observe both meters and the tachometer.
9. The battery voltage should remain above 9.6 volts.
10. The amperage draw of the starter should not exceed 130 amps.

Starter Current Draw Results (Good Battery Condition Verified)

AMPERAGE DRAW	BATTERY VOLTAGE	ENGINE RPM	POSSIBLE PROBLEM
90 to 120 amps	9.6 Volts DC or Greater	Greater Than 400 rpm	Normal
Less Than 90 amps	9.6 Volts DC or Greater	Less Than 400 rpm	Internal starter problems
Greater Than 130 amps	Less Than 9.6 Volts DC	Less Than 400 rpm	Inspect for voltage drops on positive or negative side of starter circuit.
Greater Than 130 amps	Less Than 9.6 Volts DC	Less Than 400 rpm	Voltage drops within acceptable limits. Remove starter & inspect.
Greater Than 130 amps	Less Than 9.6 Volts DC	Less Than 400 rpm	Voltage drops within acceptable limits. No internal starter problem. Engine compression is excessive or internal engine problems not allowing parts to rotate freely.

STARTER MOTOR REMOVAL

⚠ WARNING

Ensure that the ignition switch is turned off. Remove the negative cable at the battery before removing the starter motor.

1. Remove exhaust system. (Refer to Assembly View - Exhaust Complete, page 3.46).
2. Remove regulator/rectifier assembly.
3. Remove cable from starter terminal.

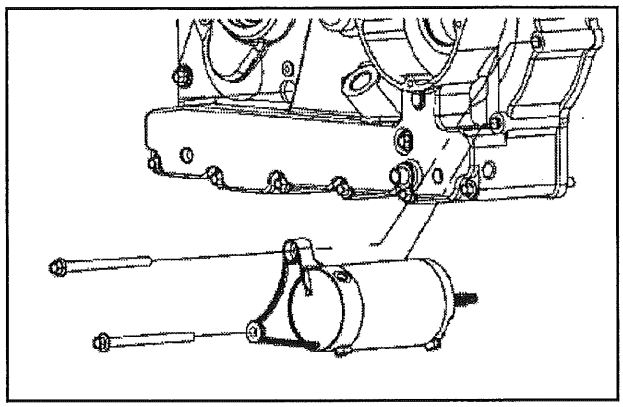

4. Place drain pan under starter.
5. Remove two starter motor mounting bolts and remove starter.

STARTER MOTOR INSTALLATION

⚠ WARNING

Make sure that the ignition switch is turned off and that the negative cable is disconnected from the battery before installing the starter.

1. Place starter into the engine case while aligning the starter mounting lugs as closely as possible during the installation process.
2. Rotate the starter to align starter mounting lugs with bolt holes in engine cases.
3. Install starter mounting bolts and tighten to specification.

TORQUE
Starter Mounting Bolts: **22 ft-lbs (30 Nm)**

4. Connect starter motor cable and cable nut. Torque cable nut to specification.

TORQUE
Starter Motor Cable Nut: **60 in-lbs (6.8 Nm)**

5. Install regulator/rectifier assembly.

TORQUE
Regulator/Rectifier: **85 in-lbs (10 Nm)**

6. Install exhaust system. Refer to Assembly View - Exhaust Complete, page 3.46.
7. Connect negative battery cable.

STARTER CLUTCH REMOVAL

- Refer to Starter Clutch Removal / Inspection, page 9.32.

CHAPTER 19
LIGHTING / INSTRUMENTATION

HEADLAMP....19.3
HEADLAMP ASSEMBLY VIEW - HALOGEN....19.3
HEADLAMP ASSEMBLY VIEW - HID....19.4
HEADLAMP ASSEMBLY VIEW — LED....19.5
HEADLAMP SYSTEM WIRING....19.6
TAIL LAMP / BRAKE LAMP SYSTEM WIRING DIAGRAM....19.7
TURN SIGNAL / HAZARD SYSTEM....19.8
TURN SIGNAL SYSTEM OVERVIEW AND DIAGNOSTICS....19.10
SPEEDOMETER / TACHOMETER SIGNALS....19.11
SPEED SENSOR TEST....19.11
SPEEDOMETER GEAR POSITION INDICATOR....19.11
TACHOMETER SIGNAL TEST....19.12
SWITCH TESTING....19.13
FRONT BRAKE LIGHT SWITCH TEST....19.13
REAR BRAKE LIGHT SWITCH TEST....19.14
NEUTRAL INDICATOR SWITCH INSPECTION....19.14
NEUTRAL INDICATOR SWITCH REMOVAL....19.14
CLUTCH SWITCH TESTING....19.14
TIPOVER SENSOR (ANGLE SENSOR)....19.15
SIDE STAND SWITCH INFORMATION (EU MODELS ONLY)....19.16
SIDE STAND SWITCH TESTING....19.16
HORN RELAY CIRCUITS....19.18
SYSTEM DIAGRAM....19.18
INSTRUMENT CLUSTER CONNECTOR INPUT / OUTPUT (CROSS COUNTRY)....19.19
HEATERS....19.20
HEATED SEAT / HAND GRIP WIRING DIAGRAM....19.20
HEATED GRIPS....19.21
ELECTRICAL COMPONENT LOCATIONS....19.22
COMPONENT LOCATIONS....19.22
GROUND LOCATIONS....19.23
CONNECTOR PIN INSPECTION....19.23
CRUISE CONTROL....19.24
OPERATION OVERVIEW - SETTING SPEED....19.24
OPERATION OVERVIEW....19.24
CRUISE CONTROL DIAGNOSTICS....19.25
CRUISE MODULE INPUT / OUTPUT....19.27
REVERSE SYSTEM (ACCESSORY)....19.28
WIRING DIAGRAM / REVERSE HARNESS....19.28
REVERSE SYSTEM DIAGNOSTICS....19.29
REVERSE SYSTEM SAFETY....19.31
OPERATING THE REVERSE SYSTEM....19.32
REVERSE MODULE / FUSE ACCESS....19.32

ELECTRICAL SYSTEM BREAKOUTS 19.33
SPEEDOMETER (CROSS COUNTRY / CROSS COUNTRY TOUR) 19.33
TRUNK 19.34
FAIRING (CROSS COUNTRY / CROSS COUNTRY TOUR) 19.35
FAIRING (MAGNUM) 19.36
SADDLEBAG SPEAKERS 19.37

HEADLAMP

HEADLAMP ASSEMBLY VIEW - HALOGEN

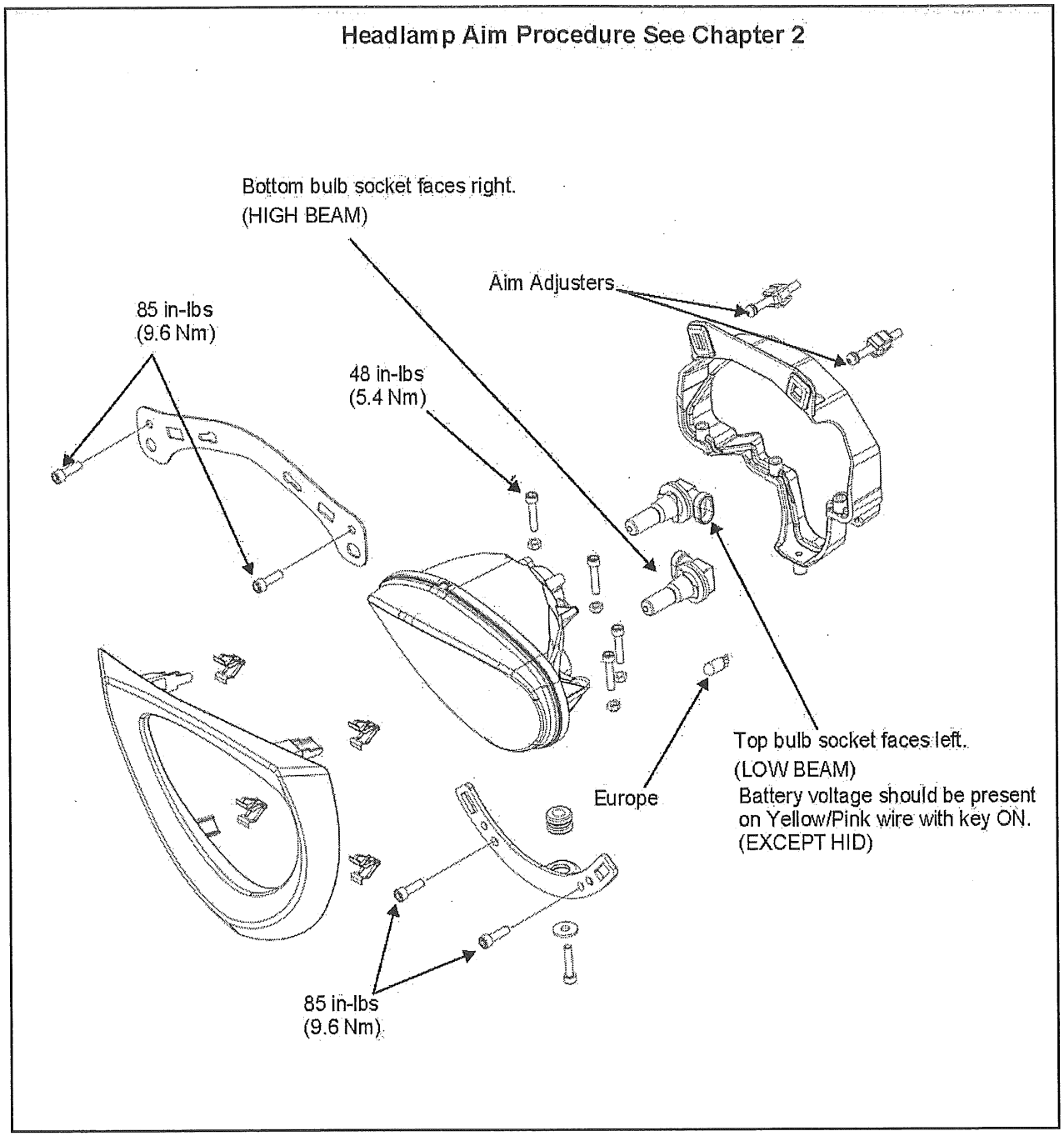

19

HEADLAMP ASSEMBLY VIEW - HID

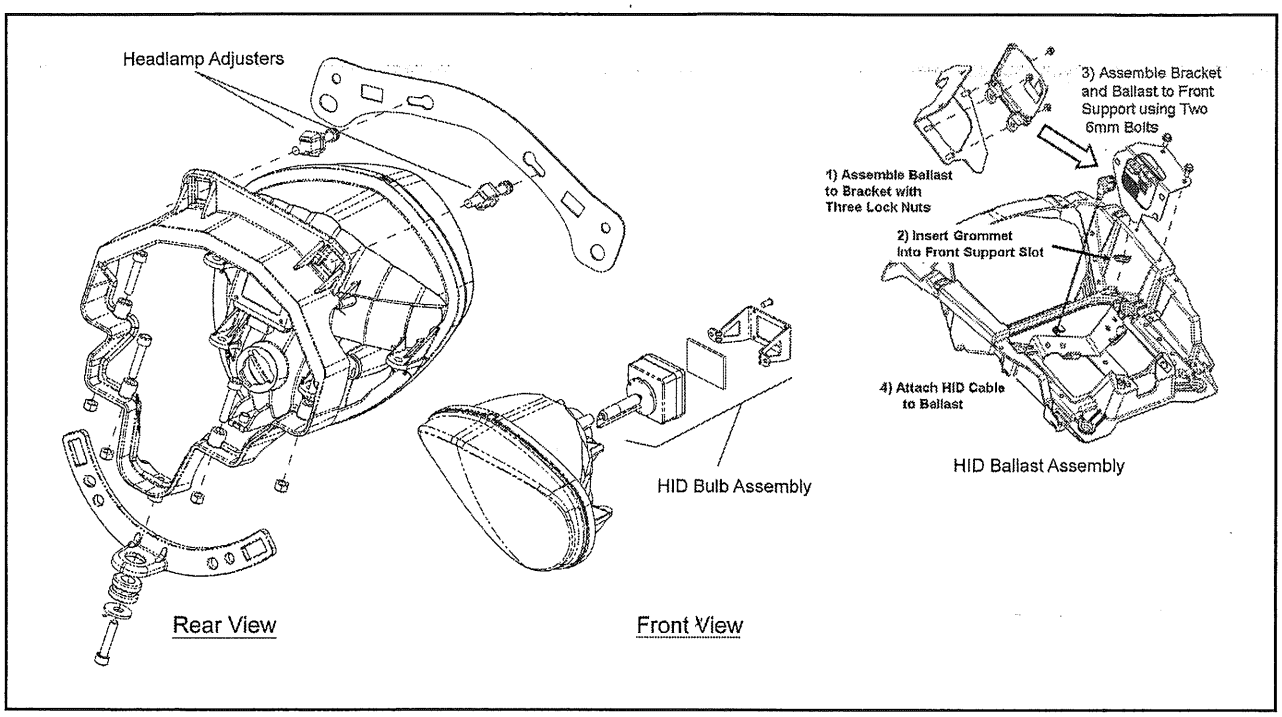

HEADLAMP ASSEMBLY VIEW — LED

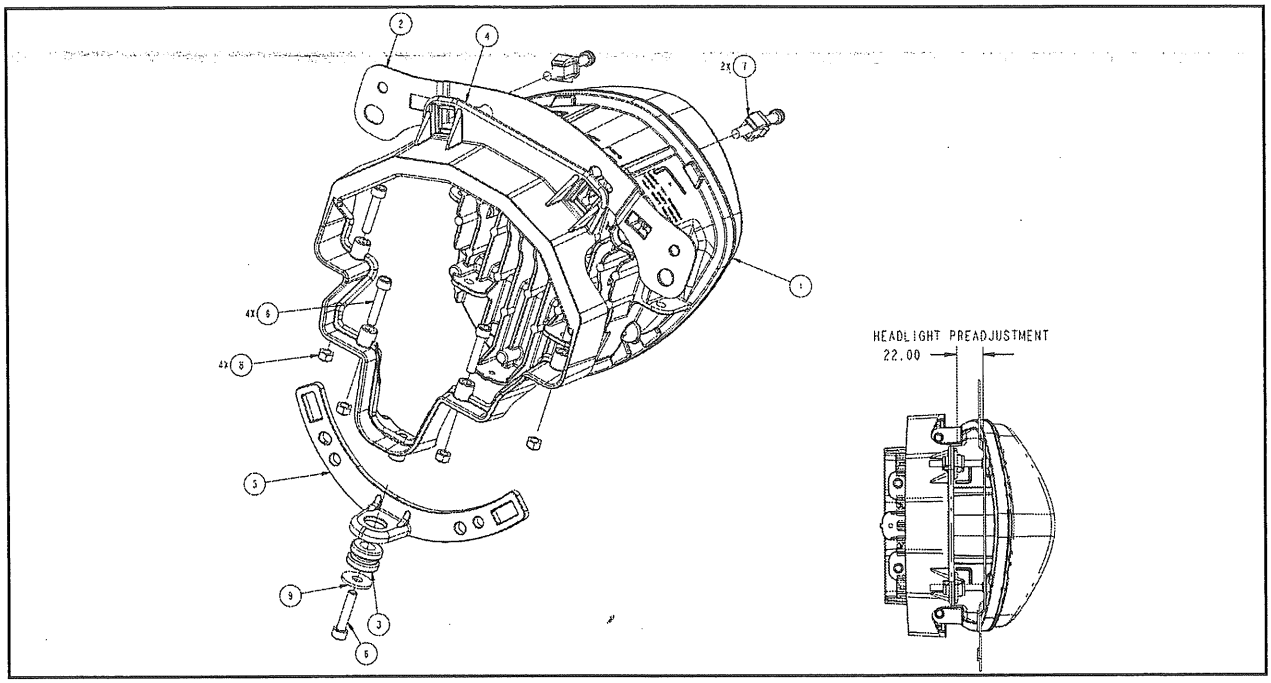

19

HEADLAMP SYSTEM WIRING

HID Headlamp System Wiring

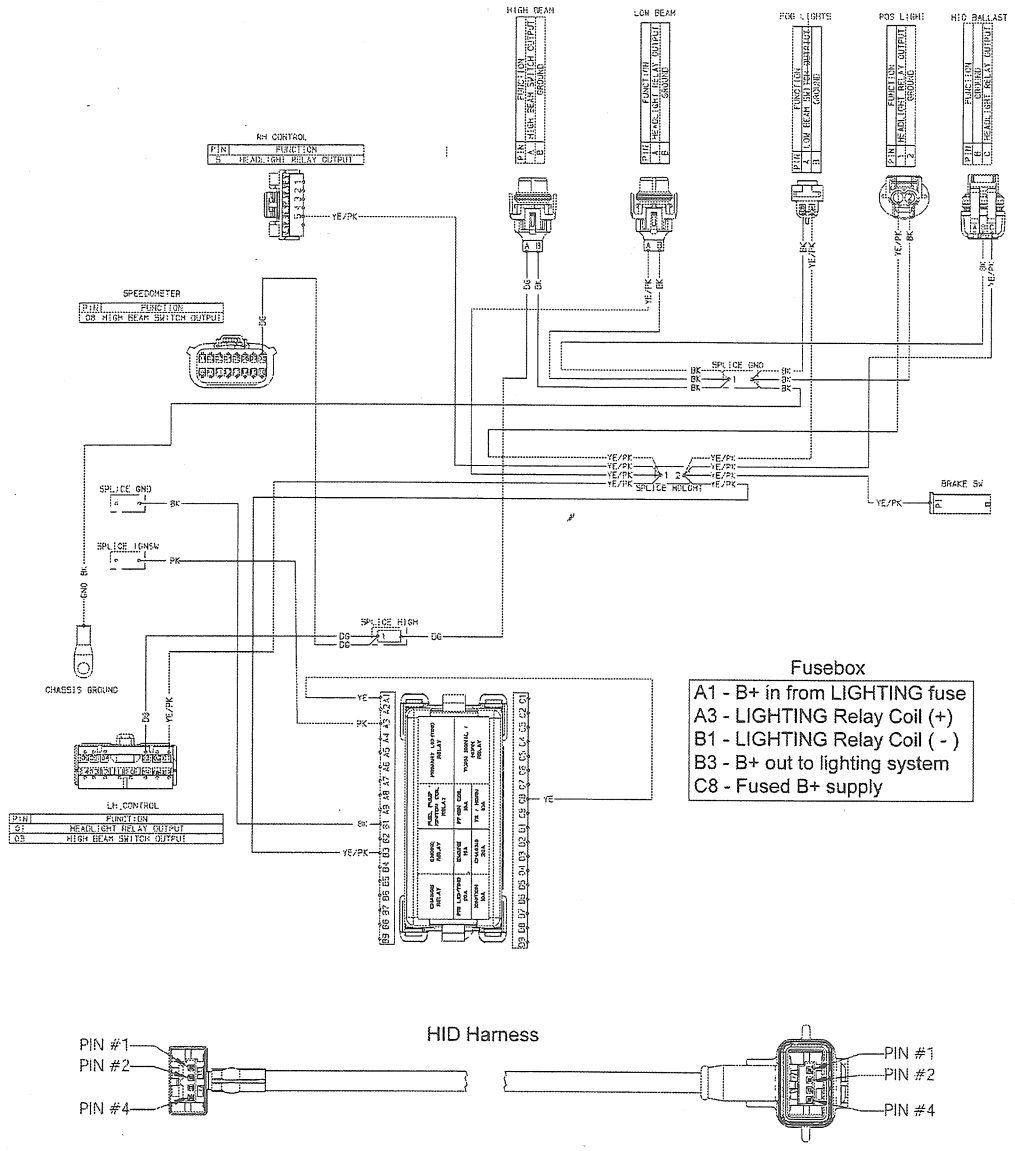

HID Harness

TAIL LAMP / BRAKE LAMP SYSTEM WIRING DIAGRAM

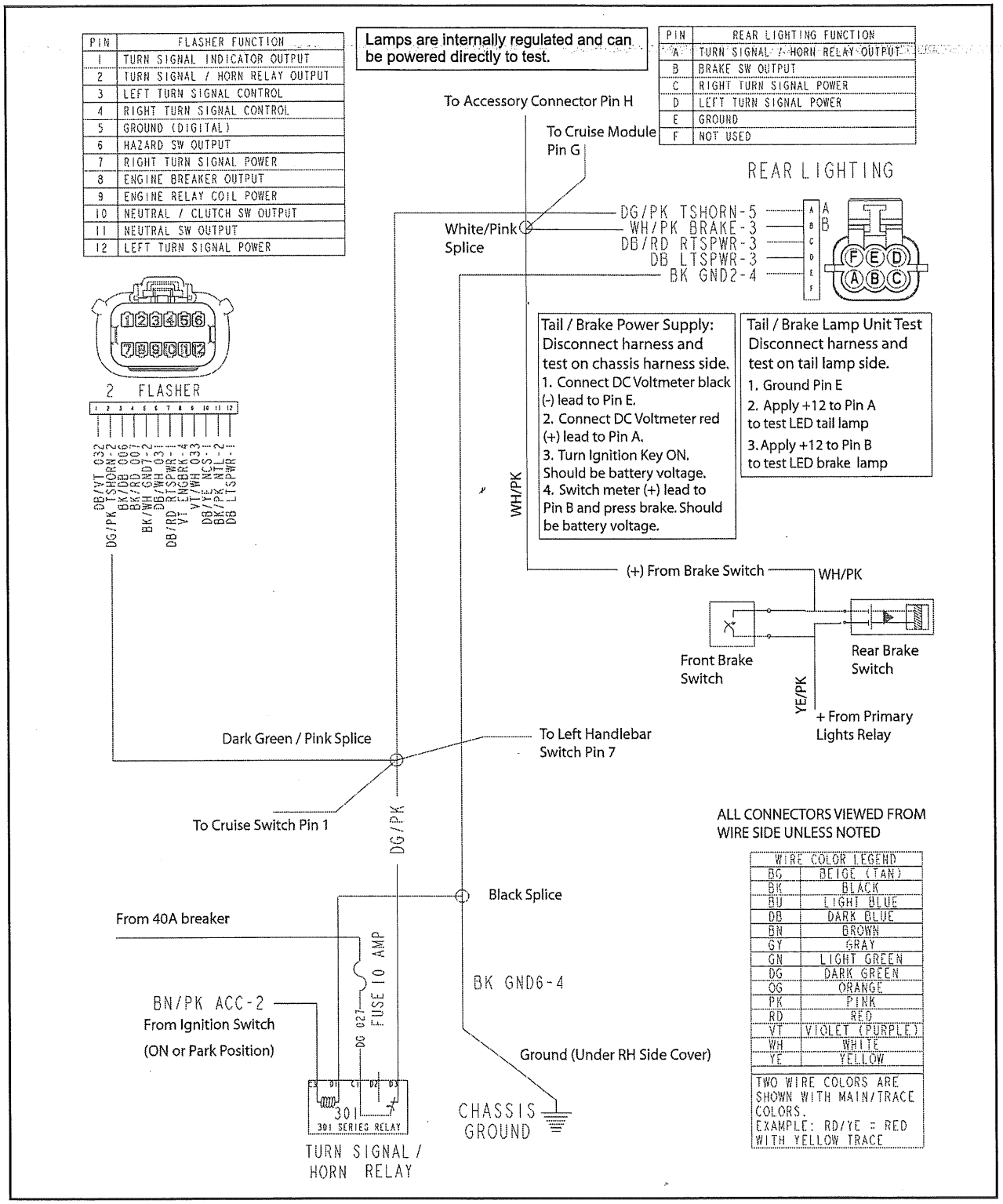

PIN	FLASHER FUNCTION
1	TURN SIGNAL INDICATOR OUTPUT
2	TURN SIGNAL / HORN RELAY OUTPUT
3	LEFT TURN SIGNAL CONTROL
4	RIGHT TURN SIGNAL CONTROL
5	GROUND (DIGITAL)
6	HAZARD SW OUTPUT
7	RIGHT TURN SIGNAL POWER
8	ENGINE BREAKER OUTPUT
9	ENGINE RELAY COIL POWER
10	NEUTRAL / CLUTCH SW OUTPUT
11	NEUTRAL SW OUTPUT
12	LEFT TURN SIGNAL POWER

PIN	REAR LIGHTING FUNCTION
A	TURN SIGNAL / HORN RELAY OUTPUT
B	BRAKE SW OUTPUT
C	RIGHT TURN SIGNAL POWER
D	LEFT TURN SIGNAL POWER
E	GROUND
F	NOT USED

WIRE COLOR LEGEND	
BG	BEIGE (TAN)
BK	BLACK
BU	LIGHT BLUE
DB	DARK BLUE
BN	BROWN
GY	GRAY
GN	LIGHT GREEN
DG	DARK GREEN
OG	ORANGE
PK	PINK
RD	RED
VT	VIOLET (PURPLE)
WH	WHITE
YE	YELLOW

TWO WIRE COLORS ARE SHOWN WITH MAIN/TRACE COLORS.
EXAMPLE: RD/YE = RED WITH YELLOW TRACE

19

TURN SIGNAL / HAZARD SYSTEM

Turn Signal System Wiring Diagram

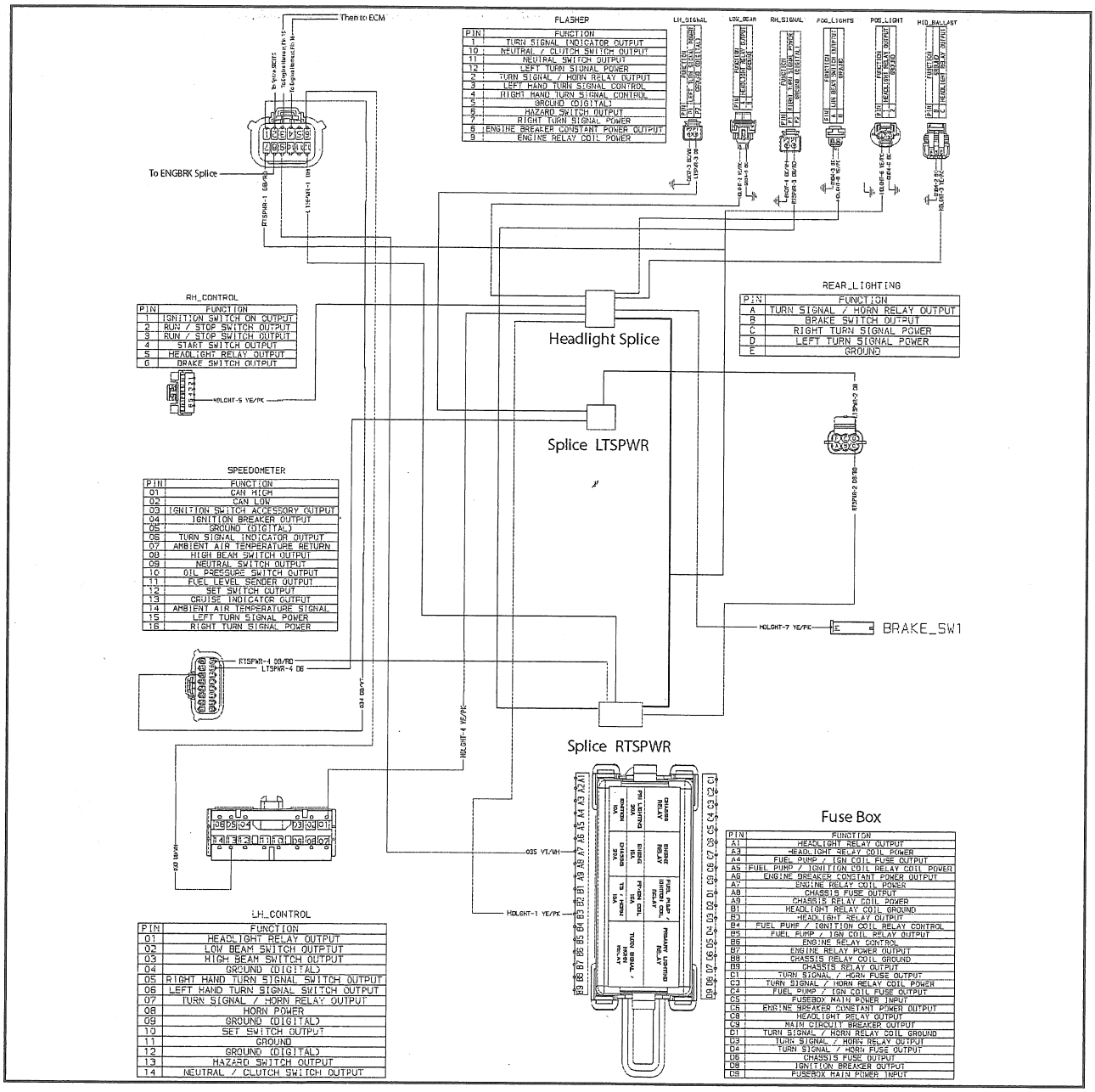

NOTE

Turn Signals are internally regulated and can be powered directly to test.

NOTE

To operate turn signals, ECM must be powered. Turn ignition key ON and Engine Stop switch to RUN.

The flasher module is under the right side cover. Ignition must be ON and Engine Stop switch set to RUN for T/S function.

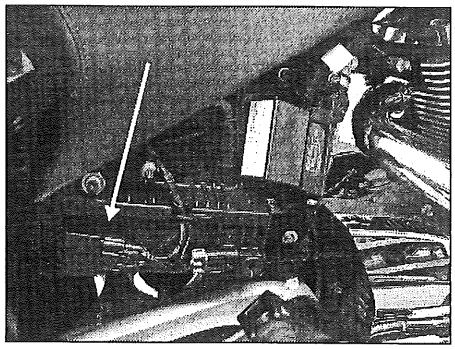

Flasher Module Pin Function

PIN	FUNCTION / NAME	WIRE COLOR	OVERVIEW OF OPERATION
1	Turn Signal Indicator Light Output	DARK BLUE / VIOLET	Module sends power to the turn signal indicator lamp on this wire when a turn signal or hazard is selected (Cross Roads only).
2	Switched Power Input (+12VDC)	DARK GREEN / PINK	+12VDC From Turn Signal / Horn relay. This wire supplies battery voltage to the flasher module.
3	Left Turn Input	BLACK / DARK BLUE	This wire receives a left turn ground input from Pin 14 of ECM (auto cancel circuit). Ground signal must pass through Pin 15 of Chassis-to-Engine harness connector. When ECM auto-cancels a turn signal (or if manually cancelled by the operator at the turn signal switch) this ground is taken away from the flasher module by the ECM.
4	Right Turn Input	BLACK / RED	This wire receives a right turn ground input from Pin 15 of ECM (auto-cancel circuit). Ground signal must pass through Pín 16 of the Chassis-to-Engine harness connector. When ECM auto cancels a turn signal (or if manually cancelled by the operator at the turn signal switch) this ground is taken away from the flasher module by the ECM.
5	Ground	BLACK / WHITE	Flasher module ground.
6	Hazard Switch Output	DARK BLUE / WHITE	This wire is grounded through the hazard switch when the switch is closed, and the module flashes all turn signals (module sends 12V to Pin 7 and Pin 12 of the module for distribution to both left and right side turn signals)
7	Right Turn Signal Power	DARK BLUE / RED	Module sends power to right turn signals on this wire when it receives a RH turn signal input (ground) on module Pin 4 (BK/RD) (from ECM Pin 15)
8	Engine Breaker Constant Power Output	VIOLET	"Negative" side of ECM Protection Diode. Prevents voltage spikes to ECM
9	Engine Relay Coil Power	VIOLET / WHITE	+12VDC side of ECM Protection Diode. Prevents voltage spikes to ECM
10	Neutral / Clutch Switch Output	DARK BLUE /YELLOW	Grounded when clutch lever switch is closed so engine can be started in gear when lever is pulled in. Diode prevents Neutral light from illuminating when clutch lever is pulled in with transmission in gear
11	Neutral Switch Output	BLACK / PINK	Ground path through neutral light switch when transmission is in neutral
12	Left Turn Signal Power	DARK BLUE	Module sends power to left turn signals on this wire when it receives a LH turn signal input (ground) on module Pin 3 (BK/BU) (from ECM Pin 14)

TURN SIGNAL SYSTEM OVERVIEW AND DIAGNOSTICS

Refer to system wiring diagram on TURN SIGNAL / HAZARD SYSTEM, page 19.8. For all testing / troubleshooting, remember to turn the ignition key ON and the engine stop switch to RUN. LED signals are internally regulated and can be powered directly to test signal unit.

The Auto-Cancel function of the turn signal system is controlled by the ECM (located under the LH side cover). When the left or right turn signal switch is activated, the switch connects the BK/WH ground wire at the switch to either ECM Pin 20 (LEFT signal) or ECM Pin 30 (RIGHT signal). *Note that this connection travels through either Pin 17 (left turn) or Pin 18 (right turn) of the Engine-to-Chassis Harness connector under the seat.*

When the ECM receives a ground signal from the switch on Pin 20 or 30, it then relays this ground signal to the Flasher Module Pin 3 (left) or Pin 4 (right) and maintains the ground until automatically or manually cancelled.

When the flasher module receives a ground input from the ECM, it sends an intermittent (flashing) 12VDC to the appropriate turn signal.

When time / distance criteria for signal cancellation is achieved, the ECM takes away the ground from the Flasher Module, and the turn signal is canceled. The signal can also be manually cancelled by pushing the turn signal button straight inward. This connects both turn signal switch wires to ground at the same time, and the ECM sees this as a "manual cancel" input.

Note that because the Hazard system requires no cancel function, *the ECM is not part of the Hazard circuit.* A HAZARD input (a ground) goes directly from the Hazard Switch to Pin 6 of the Flasher Module. The module sees the ground on Pin 6 and sends flashing 12VDC to BOTH left and right turn signals. The hazard function overrides a turn signal input.

GENERAL TROUBLESHOOTING: Turn signal diagnostics can be accomplished by manually connecting the appropriate wires to ground at various points in the system (most easily performed at the Engine-to-Chassis harness connector) and by verifying wire and switch continuity with an Ohmmeter. As with any electrical malfunction, ALWAYS verify FIRST that all wire connections are clean and tight. Look at the wires where they enter connectors or at the fuse box. Pull lightly on wires to be sure they are secured in the connector and not loose. TIP: If turn signal(s) function when Hazard switch is ON, turn signal wire connections, signal lamp, and related wiring from Flasher Module are all in working order. Check ground inputs from switch to ECM and ground outputs from ECM to Flasher Module as described below.

CONNECTOR AND COMPONENT LOCATION: The turn signal switch connector is located inside the headlamp housing (Cross Roads) or inside the fairing (Cross Country). The Flasher Module is located under the right side cover.

TURN SIGNAL SWITCH BYPASS TEST:

1. Locate Engine-to-Chassis harness connector under the left side cover and leave it connected.
2. On engine harness side of connector, jump VT/DB wire (Pin 17) to test left turn, or VT/RD (Pin 18) for right turn to ground at battery negative (-) post.

NOTE

If piercing probes are used, do not damage the wire. Seal probe marks on wire insulation after completion.

3. Turn ignition key ON and Stop switch to RUN. If turn signal works, inspect turn signal switch continuity and the path between switch and engine harness connector (to test Engine-to-Chassis harness connection perform Step 2 on the chassis side of connector).
4. The same basic test outlined above for the ground inputs from the switch can be performed on the ground output wires that supply the ground from the ECM to the to the flasher module (BK/BU Pin 15 and BK/R Pin 16). If turn signal function is restored when the output wire is grounded, the Flasher Module (and connection to the Flasher) is in working order. If signal does not flash with out put wire grounded, inspect Flasher Module connection and continuity of BK/DB or BK/RD wire to ECM.

TURN SIGNAL SWITCH CONTINUITY TEST:

5. Remove headlamp housing cover (or headlamp on Cross Country models). Locate LH switch 14 Pin connector.
6. Separate connector. Connect ohmmeter to Pin 4 and Pin 5 (RH turn) or Pin 4 and Pin 6 (LH turn) on switch side of connector. Hold switch to left or right and verify good continuity in each position.

SPEEDOMETER / TACHOMETER SIGNALS

SPEED SENSOR TEST

The speed sensor signal can be tested at various points on the vehicle depending on accessibility and preference, or if equipped with Cruise Control, follow the self-diagnostic procedure on Cruise Control Diagnostics, page 19.25.

Test points include:

- The cruise control harness connector (under the seat in the front frame opening).
- The speedometer connector (inside the headlamp or fairing).

NOTE

The signal from the speed sensor is supplied to the ECM on Pin 42, and distributed or used by the ECM to operate the speedometer, the cruise control module (whether equipped with cruise or not, the connector is there). If any one of these components is functioning properly (for example, the speedometer works or the cruise control will accept a set speed) then the speed sensor itself is functional and supplying a signal to the ECM. Diagnostics should be focused on the non functional circuit, not on the speed sensor itself.

1. Remove the seat.
2. Disconnect the cruise control connector (A) and locate the Dark Green/Dark Blue wire on Pin K. (Cross Country shown below, Cross Roads similar).

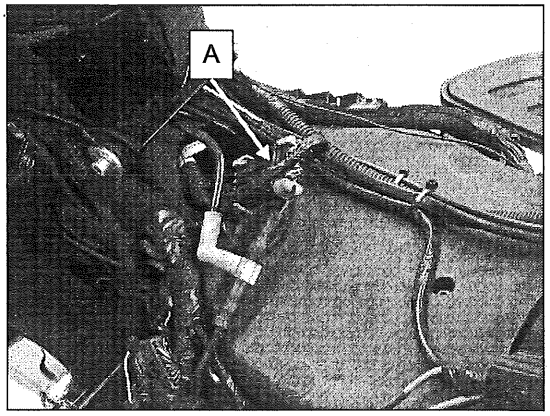

3. Safely elevate the rear wheel so it can be rotated for the test.
4. Set digital multimeter to measure DC voltage.
5. Connect red meter lead to the DG/DB wire in pin K.
6. Connect the black meter lead to engine or battery ground.
7. Turn ignition key ON and rotate rear wheel slowly while observing the bar graph below the digital display on the meter. Note: The bar graph updates much faster than the number display and will make it easier to see a voltage swing.
8. Voltage should toggle between approximately .06 volts and battery voltage if a speed signal is present.

NOTE

Look for a voltage swing - not a specific voltage.

9. If no speed signal is present, inspect all connections and the related wires in the connectors.
10. Test speed sensor using Speedometer Signal Tester PV-43544 and adaptor harness PV-47303.

SPEEDOMETER GEAR POSITION INDICATOR

For model years 2011-2013, ALL Victory Motorcycles with a gear indicator display will show dashes (—) if the clutch lever is pulled in (clutch disengaged). The gear indicator system uses multiple inputs to show the gear number 1 through 6. ALL of the following items must be present for gear indicator function:

- Vehicle ignition and run / stop switch are powered and the engine is running.
- Vehicle is in motion.
- Vehicle clutch lever is released (clutch engaged).
- Vehicle transmission is in gear 1 through 6 (not neutral).

TACHOMETER SIGNAL TEST

- The Tachometer signal is delivered on the CAN bus 6 pin connector to the gauge. This test will verify that the tachometer signal is getting to the gauge. To test for tach signal:

1. Turn the ignition key ON.
2. Turn the cruise control OFF (Press OFF button).
3. Turn the ignition switch OFF.
4. Be sure transmission is in NEUTRAL.
5. Turn the ignition key to the ON position and start the engine. Hold the RES/ACC button down while you press the cruise control ON button.
6. Release both buttons. If a tachometer signal is present, the cruise indicator lamp should flash at a rate based on engine RPM. Rev the engine. The rate of flash should increase with RPM.

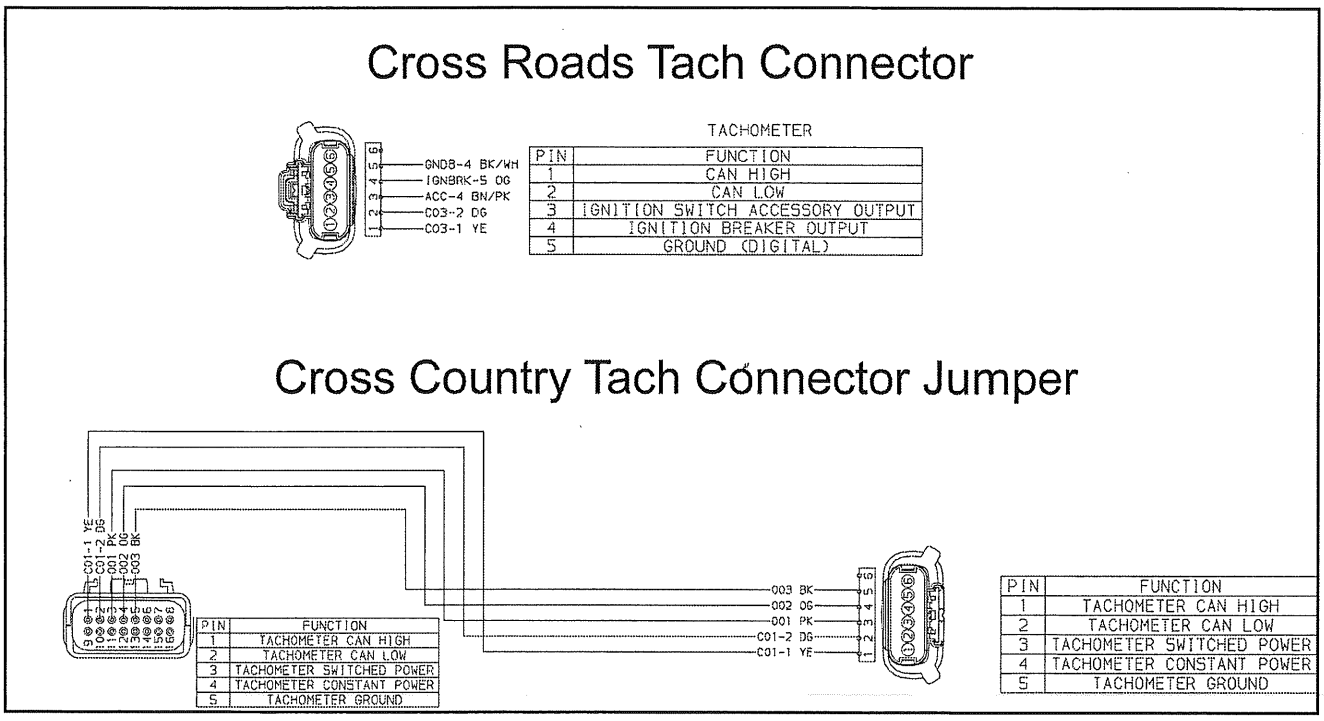

SWITCH TESTING

FRONT BRAKE LIGHT SWITCH TEST

1. Disconnect wires (A) from switch.
2. Connect ohmmeter to switch contacts and test for good continuity through switch when front brake is applied.

Continuity When Brake Applied

NOTE

The front brake switch can also be tested by following the cruise control self-diagnostic procedure on Cruise Control Diagnostics, page 19.25 (if equipped with cruise).

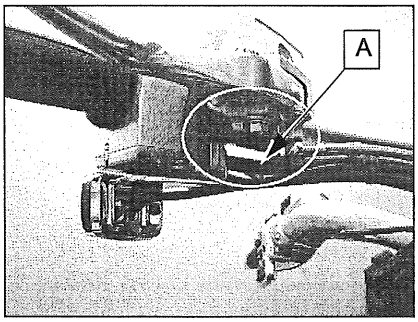

Front brake micro switch located on front brake lever perch

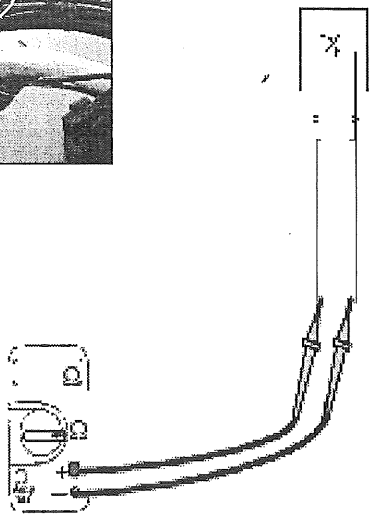

Rear brake hydraulic pressure switch located above oil filter

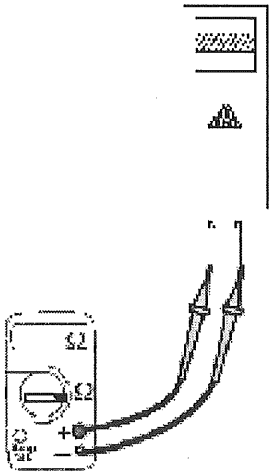

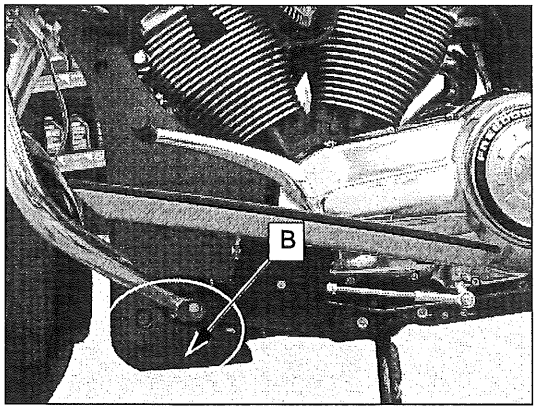

19

REAR BRAKE LIGHT SWITCH TEST

NOTE: The rear brake switch can also be tested by following the cruise control self-diagnostic procedure on Cruise Control Diagnostics, page 19.25 (if equipped with cruise).

1. Remove left highway bar and left outer chin fairing.
2. Disconnect rear brake light switch wires (B).
3. Connect ohmmeter to switch contacts.
4. Apply light pressure to rear brake.
5. The switch should become conductive (resistance less than 2 Ohms) as soon as brake pedal resistance is felt.

   SPECIFICATION: Continuity When Brake Applied

NEUTRAL INDICATOR SWITCH INSPECTION

1. Disconnect Neutral switch 2 pin connector located at the rear of engine by the vertical frame down-tube.
2. Set DMM selector to Ohms.
3. Connect one meter lead to battery negative terminal.
4. Connect the other meter lead to the BK / PK (Neutral switch) wire in the switch side of the connector. Shift transmission into Neutral. There should be low resistance to ground.

   Neutral Switch Test
5. Shift transmission into Neutral.
6. Compare resistance to Table 1.

Testing Neutral Side of Gear Position Switch

GEAR	METER LEAD CONNECTIONS		OHMMETER READING*
Neutral	Black / Pink	Crankcase	< 1.0 W
Any gear (except Neutral)			∞ (OL)
* Be sure to subtract meter lead resistance from resistance reading			

NEUTRAL INDICATOR SWITCH REMOVAL

1. Remove exhaust system and drive sprocket cover.

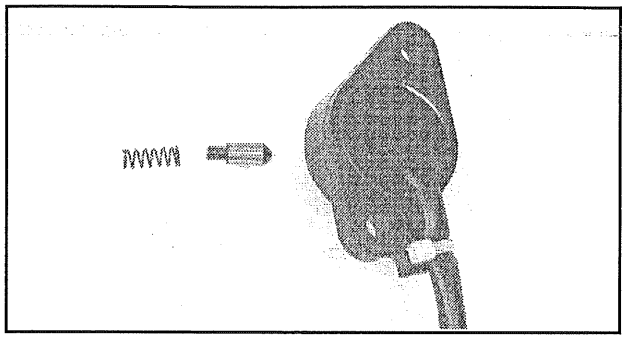

2. Remove 2 screws.
3. Disconnect 2-pin connector located near rear top of crankcase (follow wires from switch to connector).
4. Remove wire harness from P-clips on crankcase.
5. Remove switch.
6. Remove pin and spring from shift drum.
7. Remove sealing O-ring.
8. Assemble in reverse order with a new O-ring. Torque switch screws and P-clamp screws to specification.

TORQUE
Switch Screws: **43 in-lb (5 Nm)** P-clamp Screws: **87 in-lb (10 Nm)**

CLUTCH SWITCH TESTING

1. Refer to Clutch Switch / Circuit Test, page 18.10 to test the clutch switch and circuit.

TIPOVER SENSOR (ANGLE SENSOR)

OVERVIEW OF OPERATION

The Tipover Sensor (TOS) is used to disable the fuel pump, fuel injector, and ignition circuits in the event of a crash or tipover condition.

The ECM sends a 5VDC reference to the sensor and monitors the output voltage. From the output signal, the ECM can tell whether the TOS system is in normal operation, if the vehicle is tipped over, or if there is an open or short in the system wiring. Only a tipover voltage from the sensor will cause the ECM to disable the fuel pump and ignition circuits. If the TOS system wiring is disconnected (open / high) the ECM will set a fault code (and subsequent CHK ENG light) but will not disable the engine's operational circuits. The same is true for a TOS system short to ground (low).

Only in the event of an actual tipover condition is the voltage output within a range that will cause the ECM to disconnect the fuel and ignition circuits as well as the internal drivers that control them.

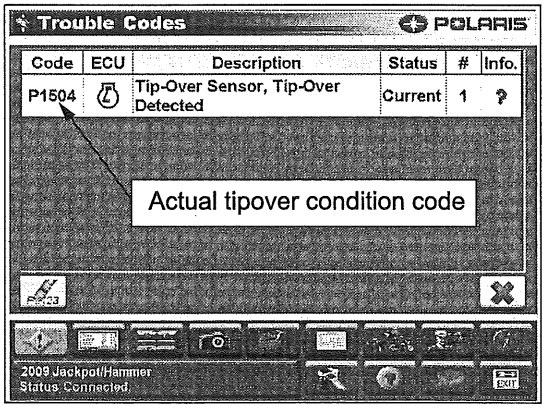

TIPOVER SENSOR RESET

After a Tipover Condition Has Occurred:

1. Return the motorcycle to the upright position and place it on the side stand.
2. Be sure the Engine Stop (kill) switch is in the RUN position.
3. Turn the ignition key OFF and wait 15 seconds.
4. Turn the ignition key ON. The fuel pump should cycle and the system should return to normal operation.

SENSOR LOCATION

The tipover sensor is mounted on the rear inner fender debris flap behind the rear shock absorber. The sensor and wire connector can be accessed by removing the right side cover.

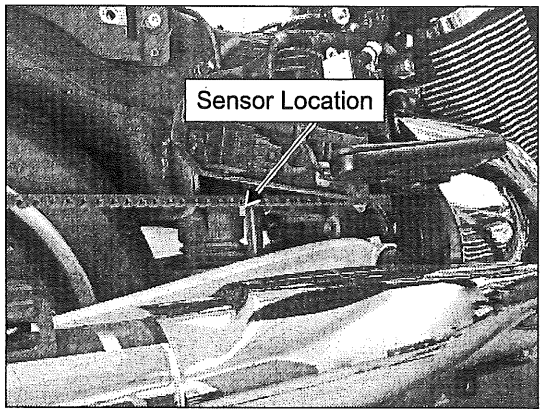

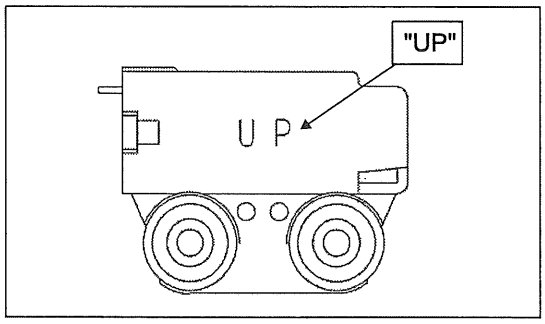

DIAGNOSTICS

5. If the tipover sensor was activated (vehicle was actually tipped over) reset the system as outlined above. If the system fault is still present, continue.
6. Remove the right side cover.
7. Visually inspect the sensor. Be sure it is securely mounted to the debris flap and the debris flap is secure in the chassis. The word "UP" must be visible on the top of the sensor and the sensor should be level relative to the motorcycle.
8. Disconnect the sensor from the main wire harness and look at connector pins for signs of corrosion or misalignment that would cause a poor connection.
9. Connect Digital Wrench for further diagnosis of the tipover sensor circuit.

SIDE STAND SWITCH INFORMATION (EU MODELS ONLY)

NOTE

The Side Stand Safety System is only used on EU model Victory Motorcycles.

- The Side Stand Safety System is in place on EU models to prevent driving or starting the motorcycle with the side stand in the lowered position while the transmission is in gear. This system will shut the engine off when transmission is in gear with the side stand down. This system will also prevent the engine from starting with the side stand in the lowered position and the transmission in gear with the clutch lever pulled in (the engine will crank, but not start).
- The Side Stand Safety System uses a magnetic switch mounted on the frame above the side stand pivot point. The EU side stand has a magnet mounted near the pivot point that activates the switch. The switch relays the side stand position to the ECM.
- Be sure to choose the correct calibration when reflashing the ECM on ALL Victory Motorcycles and verify the VIN information is correct in the ECM after the reflash. A no start condition could exist if the VIN information is not correct.

SIDE STAND SWITCH TESTING

1. Inspect side stand. Be sure the side stand magnet is still attached to the side stand by the pivot point. Also clean any large debris off of the side stand magnet.
2. Disconnect the connector for the side stand switch. Turn key on. Place the red lead of a volt meter on pin 1 (VT/PK) of the engine harness connector and place the black lead of the volt meter on battery ground. Battery voltage should be present. If battery voltage is not present, check related wires and connections. Refer to the engine wire harness wire diagram. Turn key off.
3. With an ohm meter or continuity tester, check pin 2 (BN/DB) for good continuity to battery ground. There should be good continuity to ground (0.5 ohms or less).
4. Disconnect the ECM connector. With an ohm meter or continuity tester, check for continuity between pin 3 (BK/OG) of the side stand switch harness connector and pin 32 of the ECM connector. There should be good continuity (0.5 ohms or less). If there is high resistance or no continuity, check related wires and connectors.
5. Check pins 1-3 on the side stand switch connector for shorts/grounds. If found, replace switch.

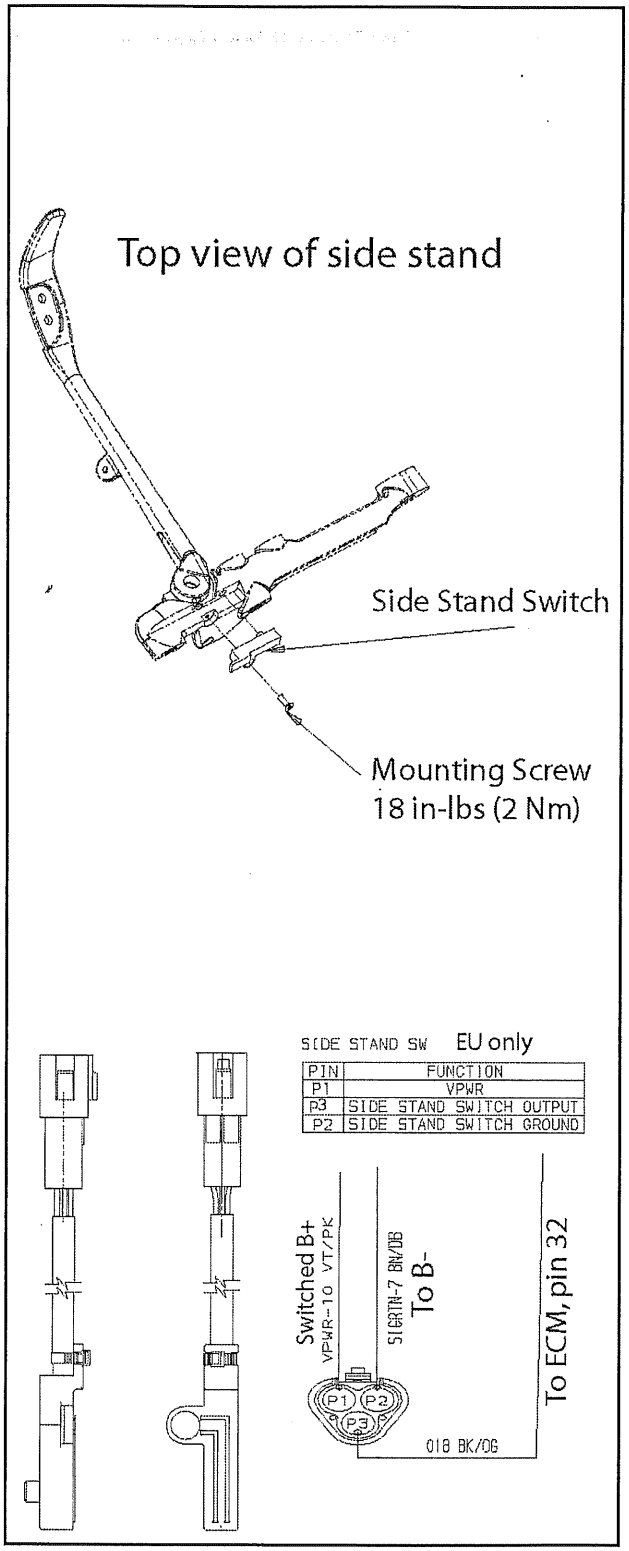

HORN RELAY CIRCUITS

SYSTEM DIAGRAM

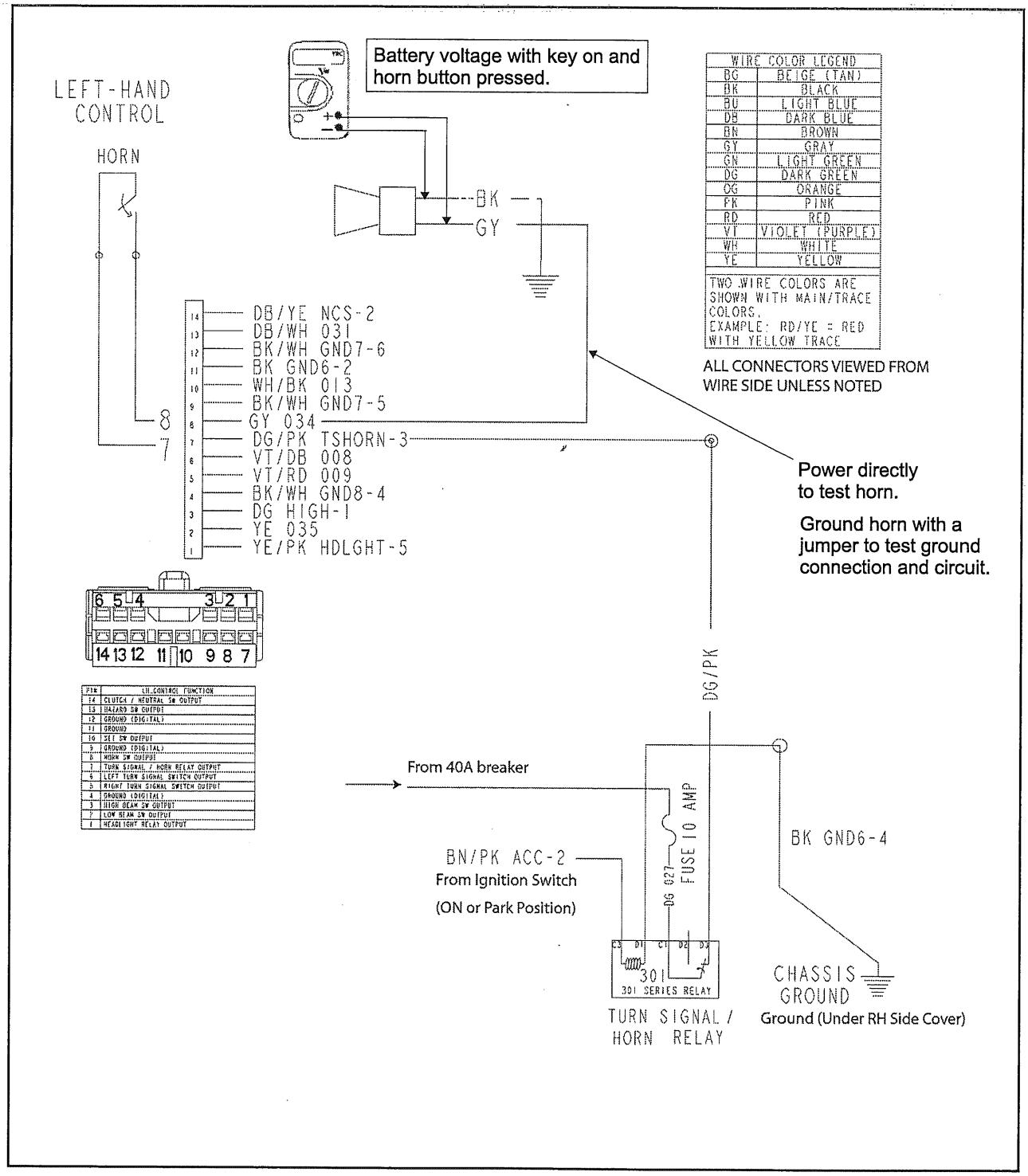

INSTRUMENT CLUSTER CONNECTOR INPUT / OUTPUT (CROSS COUNTRY)

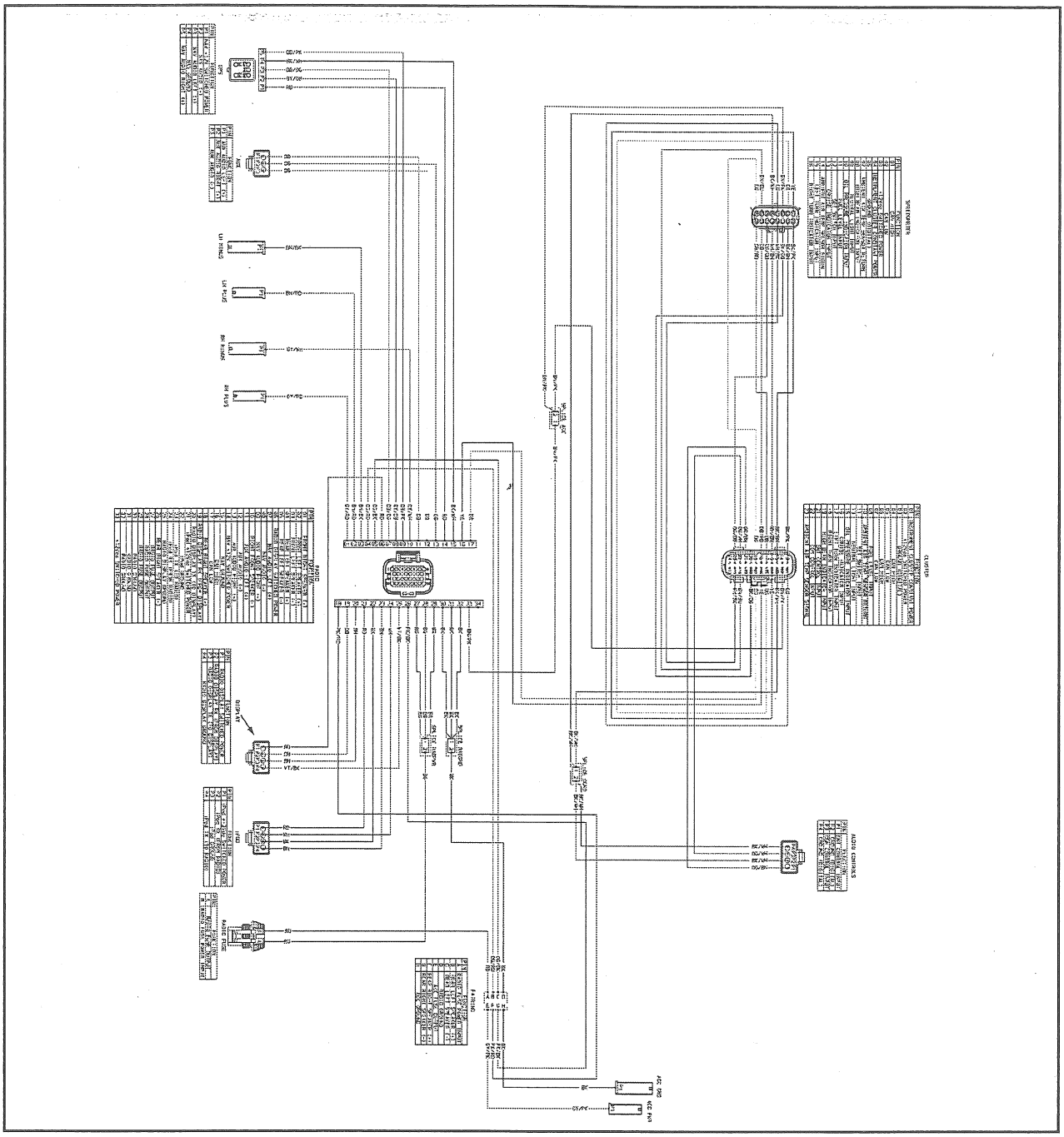

HEATERS

HEATED SEAT / HAND GRIP WIRING DIAGRAM

HEATED SEAT GRID TROUBLESHOOTING:
Disconnect 2-Pin connector (under seat).
Connect Ohmmeter to LB/PK and BK wires on seat side of 2-Pin connector. Turn both seat heater switches OFF.
Test each switch / grid separately (turn other switch OFF).
Compare to specifications below (all specs +/- 20%).

NOTE: High and low grid resistance measured will be the same approximate value.

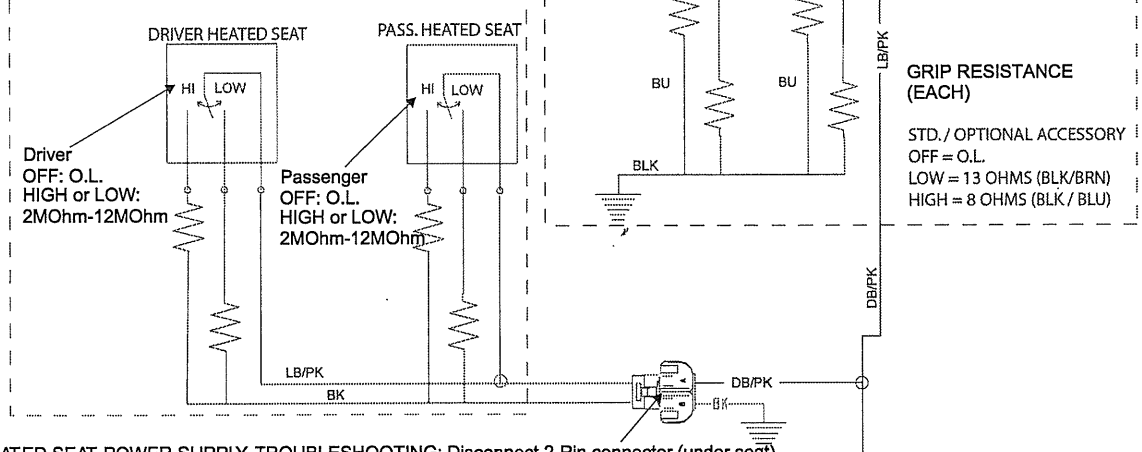

HEATED SEAT POWER SUPPLY TROUBLESHOOTING: Disconnect 2-Pin connector (under seat).
Turn key ON. Check for battery voltage on DB/PK wire on main harness side of connector.
Turn key OFF. Check for a good ground (less than 1 Ohm) on BK wire (on main harness side of 2-Pin).

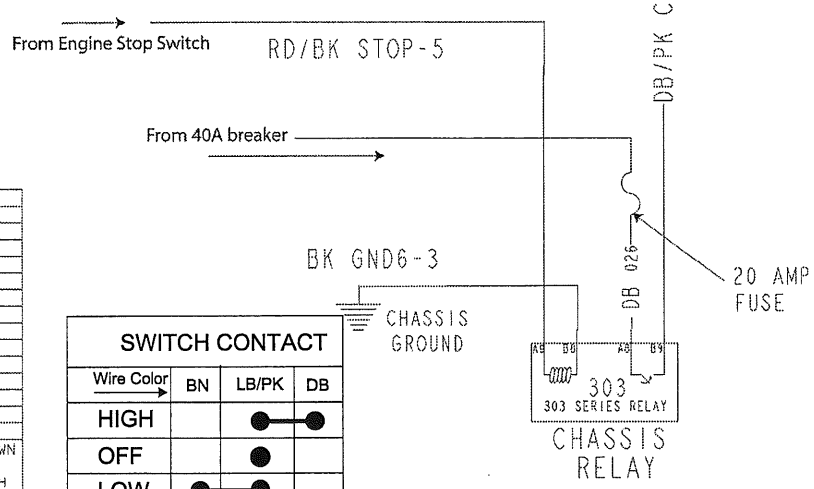

WIRE COLOR LEGEND	
BG	BEIGE (TAN)
BK	BLACK
BU	LIGHT BLUE
DB	DARK BLUE
BN	BROWN
GY	GRAY
GN	LIGHT GREEN
DG	DARK GREEN
OG	ORANGE
PK	PINK
RD	RED
VT	VIOLET (PURPLE)
WH	WHITE
YE	YELLOW

TWO WIRE COLORS ARE SHOWN WITH MAIN/TRACE COLORS. EXAMPLE: RD/YE = RED WITH YELLOW TRACE.

SWITCH CONTACT

Wire Color →	BN	LB/PK	DB
HIGH		●	●
OFF		●	
LOW	●	●	

HEATED GRIPS

TROUBLESHOOTING:
To Measure Individual Grip Wire Resistance:
Black - Brown: 13 Ohms
Black - Blue: 8 Ohms

Note: White grip wires are connected together

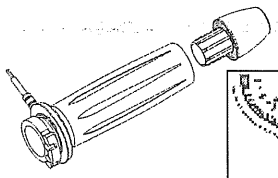

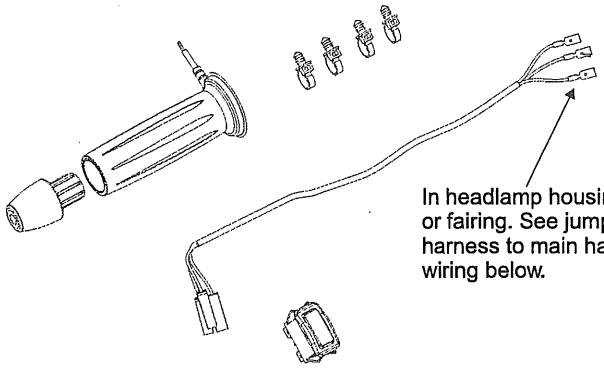

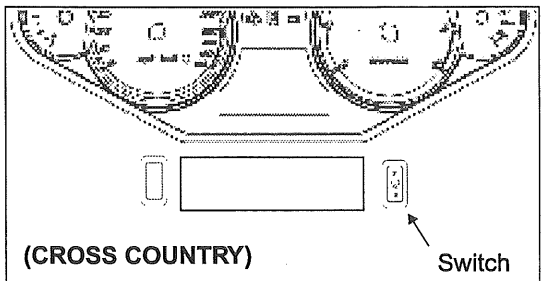

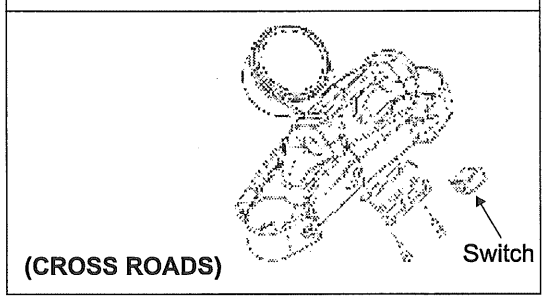

TROUBLESHOOTING:
To Measure Grip Resistance at Switch:
(This test measures the resistance of both grip heater grids in parallel).
Disconnect DB (High) and BN (Low) wires from switch.
Measure resistance between DB wire and ground: Approx 4 Ohms
Measure resistance between BN wire and ground: Approx 6.5 Ohms
If resistance is out of range, test each grip resistance individually.

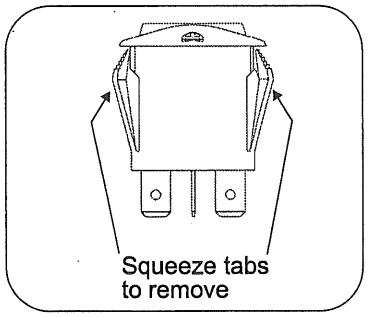

JUMPER HARNESS TO MAIN HARNESS WIRING

LB = Light Blue; BU = Blue; DB = Dark Blue; BN = Brown;
BK = Black; WH = White; PK = Pink

Jumper Harness Wire Color → / ↓ Main Harness Wire Color	BK	LB	DB	BN
BK	●			
BU/PK		●		
BU			●	
BN				●

SWITCH CONTACTS			
Wire Color →	BN	LB	DB
HIGH		●	●
OFF		●	
LOW	●	●	

CONNECTIONS TO SWITCH

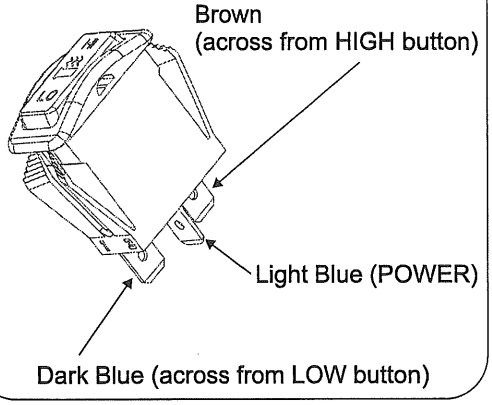

19

ELECTRICAL COMPONENT LOCATIONS

COMPONENT LOCATIONS

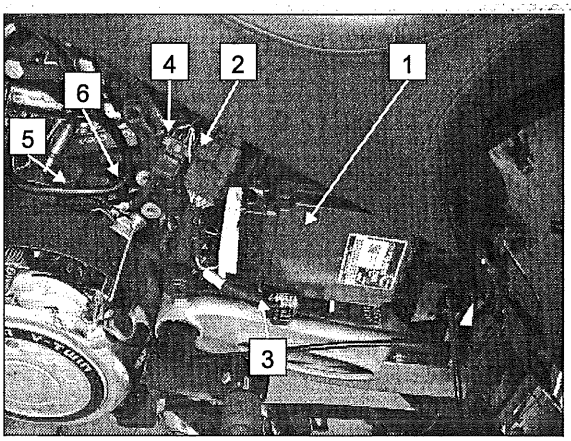

LEFT SIDE COVER

- ECM (1)
- Engine-to-Chassis Harness Connector (2)
- Diagnostic Connector (3)
- Reverse (Accy) Connector (4)
- Vehicle Speed Sensor (VSS) (5)
- Gear Position Switch Connector (6)

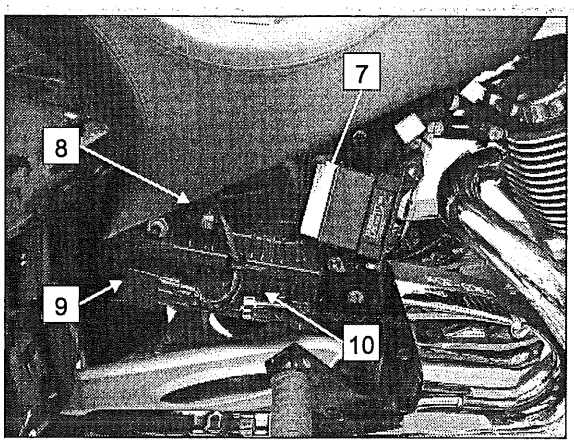

RIGHT SIDE COVER

- Fuse Box (7)
- EVAP Purge Connector (8)
- Flasher Module (9)
- Fuse - Accy (Powerlet GY/RD) (10)

CROSS COUNTRY GENERAL HARNESS AND CONNECTOR ROUTING / LOCATION

- Radio Fuse (11)
- Ambient Air Temp (12)
- Radio Antenna (13)
- NAV Connector (14) (if equipped)
- Chassis to Fairing Harness Connector(15)
- Cruise Switch Connector (16)
- Handlebar Switch Connectors (17)
- Fairing Harness Connector (18)
- LCD Display Connector (19)

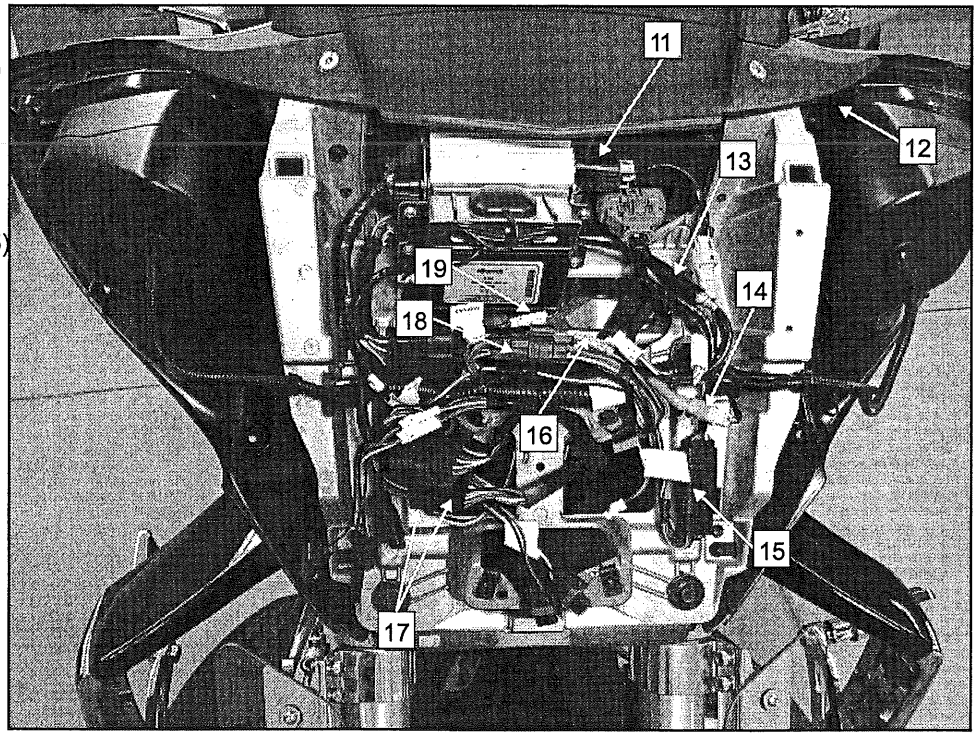

GROUND LOCATIONS

Symptoms of a loose, corroded, or broken ground wire vary depending on the wire and the location. Most often, a problem with a main ground wire location will affect multiple circuits. Inspect the grounds to be sure they are clean and tight.

Engine ground (A).

Left rear corner of crankcase.

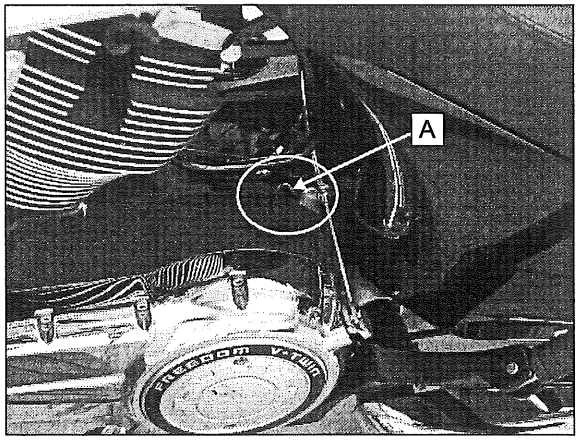

Chassis harness grounds are located under the right side cover, behind the inner panel.

The ECM ground is located on the frame behind the ECM.

CONNECTOR PIN INSPECTION

Thorough inspection of an electrical connection should include a visual inspection of pin and socket condition, cleanliness, alignment AND SECURITY. The photo below is an example of a wire at the fuse box that is pushed past the lock tab (the lock is in place). Always pull *lightly* on connector wires in a suspect circuit to be sure they are secured in the connector, and do not move when the mating halves are re-connected or when fuses, relays, or breakers are re-installed in their respective sockets.

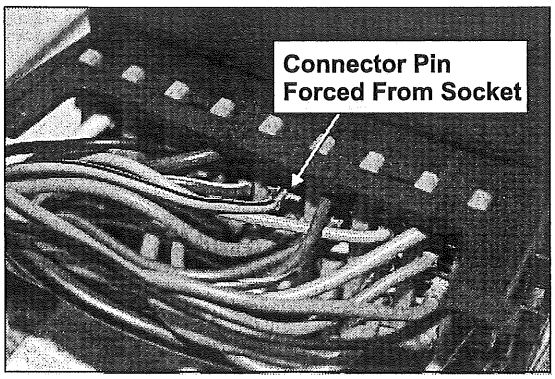

CRUISE CONTROL

OPERATION OVERVIEW - SETTING SPEED

Review *Cruise Control Safety & Operation* in the Rider's Manual before operating the Cruise Control. *NOTE THAT YOU MUST WAIT AT LEAST 3 SECONDS AFTER TURNING THE CRUISE SWITCH ON BEFORE IT WILL ENGAGE!*

To set the cruise control (if equipped):

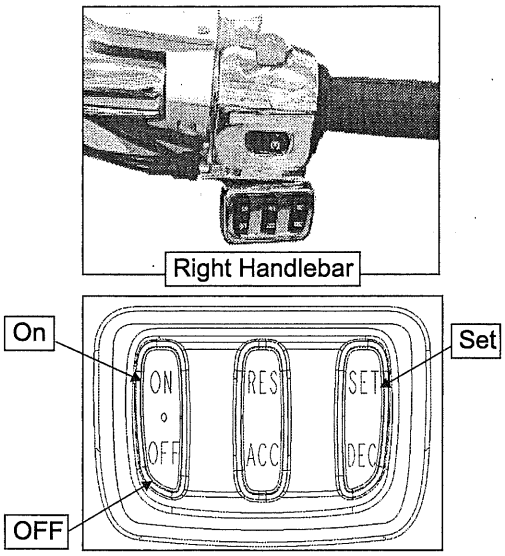

1. Press the ON button to activate Cruise Control. Note the cruise indicator on the instrument cluster will illuminate every time the ON/OFF button is pressed.
2. Accelerate to desired speed and press SET button (wait at least 3 seconds after the cruise ON button was pressed). This speed will be logged in memory.
3. The CRUISE indicator lamp on the instrument cluster will illuminate.

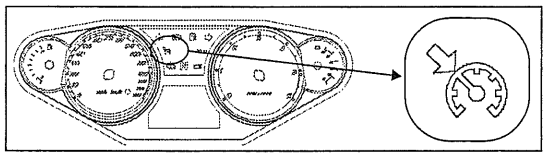

- Cruise control can be set in any gear.
- The cruise control can be activated at speeds above 25 mph (40 kph).
- Set speed will vary slightly in hilly terrain.
- The cruise control will not resume a pre-set speed if the resulting accel / decel rate is too high or too low. *Example*: If you are in 6th gear and try to resume a set speed from 40 mph, the cruise may disengage.
- Brake lights must be working properly.

4. Push the OFF button to turn the cruise control system off and erase the memory set speed.

OPERATION OVERVIEW

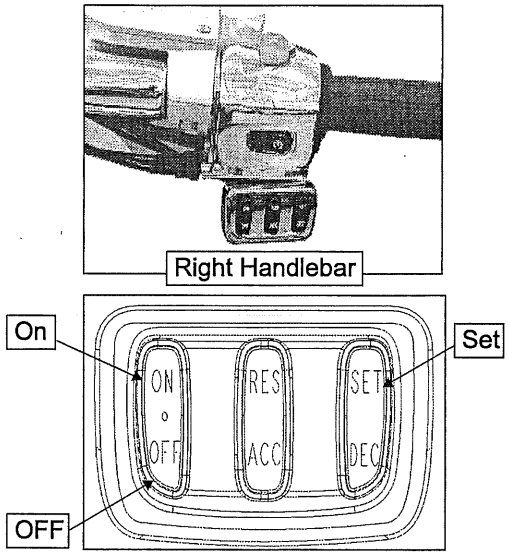

RESUME

Pressing the Resume button (RES) will reset the cruise to the memorized speed after braking or disengaging the cruise control with either brake, throttle, or clutch.

NOTE

If the RES button is pressed within 3 seconds of disengaging, the cruise control may not engage, EVEN IF THE CRUISE CONTROL INDICATOR ILLUMINATES. This is a safety feature that prevents cruise control from engaging if a button is stuck. To continue using cruise control, disengage it. Wait at least 3 seconds, then press the RES button.
Turning the cruise control master switch off will erase the set speed from memory and disengage the cruise control.

ACCELERATE

Tap and release the ACC button to increase speeds in approximately 1 mph (1-2 km/h) increments. Press and hold ACC button to accelerate to a new SET speed (resets when button is released).

NOTE

If you use throttle to accelerate and then release it, cruise will resume original SET speed.

DECELERATE

Tap and release Decelerate (DEC) button to decrease speeds in approximately 1 mph (1-2 km/h) increments. Press and hold DEC button to decelerate to a new SET speed (resets when button is released), or to the minimum of 25 mph (40 km/h).

TO CANCEL THE CRUISE CONTROL

To temporarily cancel cruise control and allow use of the resume feature:

- Apply brakes, close the throttle, or pull the clutch lever in.

To cancel the cruise control and erase the set speed from memory, press OFF.

CRUISE CONTROL DIAGNOSTICS

The sensors and switches that supply information to the cruise control module can be tested to verify proper operation using the self-diagnostic function built in to the cruise control system.

NOTE: The ENGINE STOP SWITCH must be in the RUN position during the entire procedure. The LED indicator light on the ON/OFF switch must be illuminated when the key, stop switch, and cruise are ON. (Check power supply on Pin 1 (DG/PK wire) at the cruise switch connector in the fairing if the LED is not lit.

To enter the diagnostic mode:

1. Turn the cruise control OFF.
2. Turn the ignition switch OFF.
3. Turn the ignition key ON, but do not start the engine.
4. Press and HOLD the RESUME / ACC button while you press the cruise control ON/OFF button. The cruise control indicator should illuminate on the instrument cluster.
5. Release both buttons. The cruise control indicator should go OFF. *If it does NOT go off when the buttons are released, refer to the Troubleshooting Chart at the end of this procedure.*

   The system is now in self-diagnostic mode.

   Switch Button Test
6. Press and release the SET/DEC button. The cruise indicator lamp should illuminate every time the button is pushed and go out when released.
7. Press and release the RES/ACC button. The cruise indicator lamp should illuminate every time a button is pushed and go out when released.

   Brake Light Switch Test
8. Pull the front brake lever or push the rear brake pedal. The cruise indicator lamp should illuminate every time a brake is applied and go out when released.

   Throttle Safety Switch Test
9. Close the throttle firmly with the twist grip. The cruise indicator lamp should illuminate every time the throttle is closed and go out when the throttle grip is released.

   Vehicle Speed Sensor (VSS) Test
10. Roll the motorcycle forward or backward for at least 2 meters while observing the cruise indicator lamp. If the speed signal is present, the cruise indicator lamp should flash and continue to flash at the same rate.

    Tachometer Signal Test
11. Turn the cruise control OFF (press the OFF button).
12. Turn the ignition switch OFF.
13. Be sure the transmission is in NEUTRAL.

14. Turn the ignition key to the ON position and start the engine. Hold the RES/ACC button down while you press the cruise control ON button.
15. Release both buttons. If a tachometer signal is present, the cruise indicator lamp should flash at a rate based on engine RPM. Rev the engine. The rate of flash should increase with RPM.
16. Turn the ignition key to the OFF position. All tests are complete.

Cruise Control Self-Diagnostic Troubleshooting

SYMPTOM	POSSIBLE PROBLEM	REMEDY / DIAGNOSTIC TEST
Cruise indicator lights but does not go off when buttons are released in Step 5.	Front brake switch, rear brake switch, or throttle switch is closed.	Enter diagnostic mode. Disconnect each switch, one at a time, while watching the cruise indicator. If the cruise light goes out when a switch is disconnected, inspect the switch and related circuit wiring. If the throttle switch is suspect, adjust throttle cable free play as described in the Maintenance Chapter and test the switch. Disconnect the switch and connect an Ohmmeter to the switch contacts (on the throttle close cable). The throttle switch should have continuity only when the throttle is closed firmly, and no continuity when throttle is released (Pin 4 of module should not be powered when throttle is released).

CRUISE MODULE INPUT / OUTPUT

The self-diagnostic test on Cruise Control Diagnostics, page 19.25 will test the following signal inputs to the module:

- SET/DEC Button on the handlebar switch.
- RES/ACC button on the handlebar switch.
- Front and rear brake light switch.
- Vehicle Speed Sensor (VSS).
- Tachometer Signal.

If the red LED on the handlebar switch is on when powered, but the self diagnostics will not function, disconnect the harness from the module (located in the frame opening under the seat) and verify that battery voltage is reaching the module on Pin A (White / Dark Blue wire).

NOTE

The red LED only indicates that power is reaching the handlebar control and does not indicate that power is reaching the module. If the self diagnostic function performs normally (Cruise Control Diagnostics, page 19.25) power is reaching the module and the inputs listed above are present and functional.

Cruise Module Connector / Jumper Harness Location (A).

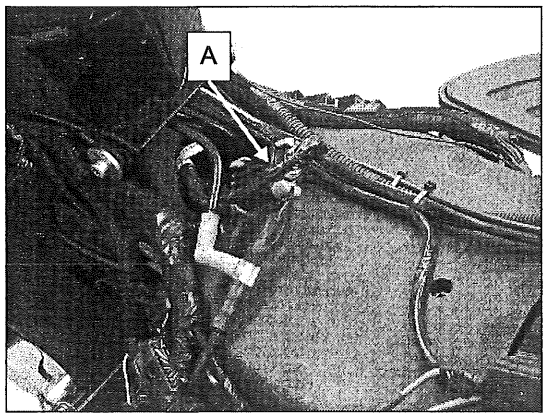

Disconnect harness from module. Test Input / Outputs with a 12V test light or a multimeter and compare to table. Verify Pin E (Black wire) has a good ground to the rear frame. The ground connection is located under the right inner panel under the right side cover.

Cruise Module Wire Harness Connector

PIN	WIRE COLOR	CRUISE CONTROL FUNCTION
A	WH / DB	ON / OFF (+12 Vdc)
B	WH / OG	SET / DECEL INPUT (+12 Vdc)
C	WH / VT	RESUME / ACCEL INPUT (+12 Vdc)
D	WH / RD	THROTTLE SAFETY SW IN (+12 Vdc)
E	BK	GROUND
F	DB / PK	SWITCHED POWER (+12 Vdc)
G	WH / PK	STOP LAMP INPUT (+12 Vdc)
H	DG / WH	ENGINE RPM INPUT (TACH SIGNAL FROM PIN 22 of ECM)
J	WH / BN	INDICATOR LAMP OUTPUT
K	DG / DB	VEHICLE SPEED INPUT (FROM PIN 21 ECM)

REVERSE SYSTEM (ACCESSORY)

WIRING DIAGRAM / REVERSE HARNESS

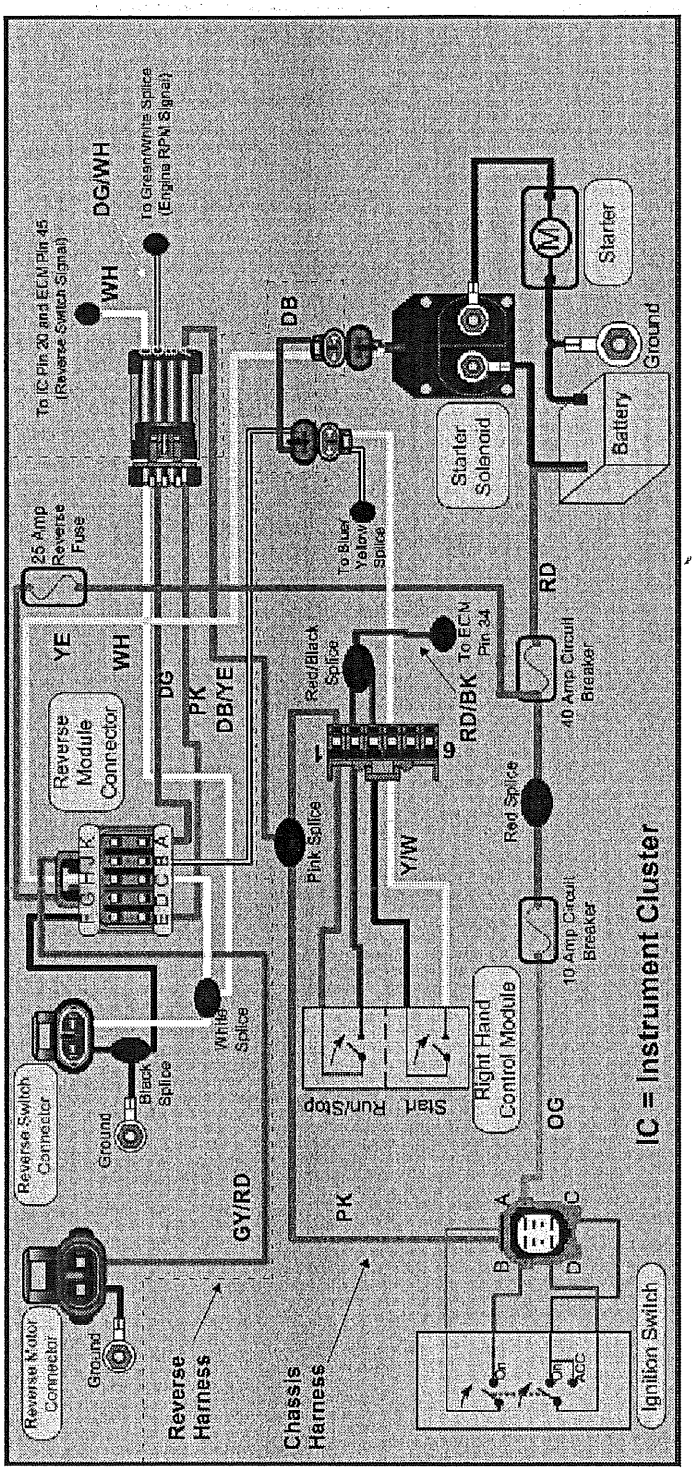

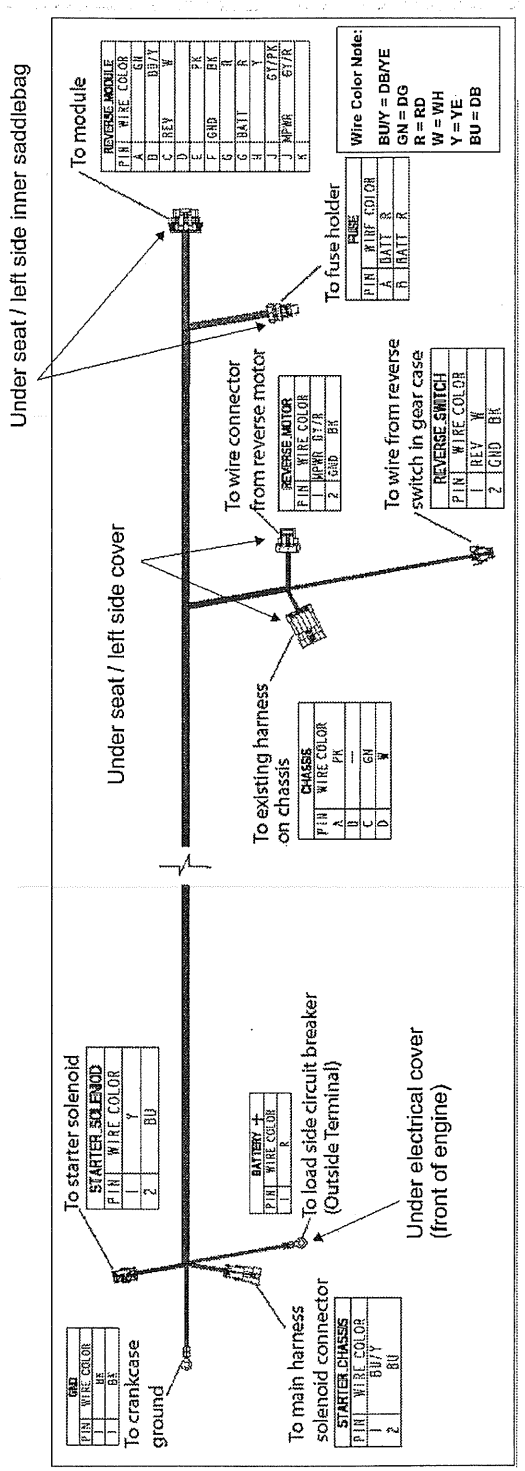

REVERSE SYSTEM DIAGNOSTICS

OVERVIEW OF OPERATION

In a Reverse system, the electric starter button serves a dual purpose. When the starter button is pressed, battery voltage is sent through the Reverse wiring harness to the Reverse Module. The module then decides whether to send power to the electric starter solenoid (for engine starting) or to the Reverse Drive Motor (for reverse operation). This decision is based on information the module receives from the reverse switch and a few other inputs such as the neutral switch and tachometer signal.

MECHANICAL SYSTEM BASIC FUNCTION

When the Reverse Lever is lifted UP (Reverse) a cam-actuated linkage rod pulls the Reverse Idler Gear inward, directly coupling the Pinion Gear to the Reverse Driven gear (mounted to the belt drive sprocket). The Reverse Switch is now OPEN, which takes the ground away from Pin C of the module, and the module will supply power to the Reverse motor when the starter button is pressed.

REVERSE MODULE INPUT TESTING

To test the various inputs to the reverse module, disconnect the harness from the module (Reverse Module / Fuse Access, page 19.32) and test with a 12V test light or multimeter. Tests are outlined in the table below.

NOTE

The engine must be running to test the tachometer signal to the module on Pin A. If the tachometer works, perform tests on the other inputs first, then if necessary, test the tach input on Pin A.

Reverse Module Input / Output

PIN NUMBER	FUNCTION / NAME	WIRE COLOR	PIN FUNCTION / TEST CONNECTIONS / NORMAL RESULT (ALL INPUT TESTS PERFORMED ON CONNECTOR PINS; HARNESS DISCONNECTED FROM MODULE)
A	Tachometer Input	DG	*SIGNAL*: 9Hz square wave. *FUNCTION*: tells module engine is running. *TEST*: Set meter to Hz A/C or Vdc. Start engine first, then disconnect harness connector from module. Connect red (+) meter lead to PIN A. Connect black (-) meter lead to engine ground or Pin F (if ground at Pin F has been tested). *RESULT*: Approximately 9 Hz or a pulsating DC indicated on the bar graph of the meter, indicating that a signal is present (voltage reading will vary).
B	Start Switch Input	DB / YE	*SIGNAL*: +12 Vdc. *FUNCTION*: Battery voltage into module when starter button is pressed. *TEST*: Set meter to Vdc. Connect red (+) meter lead to PIN B. Connect black (-) meter lead to engine ground (or Pin F). Turn ignition switch ON and stop switch to RUN. *RESULT*: Battery voltage present when starter button is pressed.
C	Reverse Switch Input	WH	*SIGNAL*: Open to ground. *FUNCTION*: Tells module Reverse has been selected (Pin C has no ground). *TEST*: Set meter to W (Ohms). Connect one meter lead to PIN C. Connect other meter lead to engine ground (or Pin F). Move reverse lever to Reverse. *RESULT*: OPEN (OL) with lever in Reverse (UP). Good continuity to ground (£ 1W) with lever in Forward (down).
D	Not Used	-	Pin D not used
E	Switched Power	PK	*SIGNAL*: +12 Vdc. *FUNCTION*: Battery voltage into module. *TEST*: Set meter to Vdc. Connect red (+) meter lead to PIN E. Connect black (-) meter lead to engine ground (or Pin F). Turn ignition switch ON and stop switch to RUN. *RESULT*: Battery voltage present when key is turned ON.

PIN NUM-BER	FUNCTION / NAME	WIRE COL-OR	PIN FUNCTION / TEST CONNECTIONS / NORMAL RESULT (ALL INPUT TESTS PERFORMED ON CONNECTOR PINS; HARNESS DISCONNECTED FROM MODULE)
F	Ground	BK	Module ground. *TEST*: Set meter to W (Ohms). Connect one meter lead to PIN F. Connect other meter lead to engine ground. *RESULT*: Continuity to ground (£ 1W).
G	Battery Voltage	RD	*SIGNAL*: +12 Vdc. *FUNCTION*: Power supply from *load* side of 40A circuit breaker. Module switches power to Pin J in Reverse. *TEST*: +12 Vdc constant.
H	Starter Output	YE	Power out of module to engine starter solenoid when starter button is pressed (and reverse lever *is not* in Reverse).
J	Reverse Output	GY/ RD	Power out of module to reverse drive motor when starter button is pressed (and reverse lever is in Reverse).
K	Not Used	-	Pin K not used

Reverse System Troubleshooting

PROBLEM	POSSIBLE CAUSE / REMEDY	REFERENCE
Reverse system inoperative. "R" not indicated on display.	Reverse switch contacts closed. Check reverse switch function and linkage adjustment.	See below for switch contact test. Adjust linkage rod.
	25A fuse open (blown). Replace fuse and determine cause.	See Reverse Module / Fuse Access, page 19.32
	Poor wiring connection. Verify all wiring is connected and clean.	
Engine starter inoperative* *NOTE: If the 25A fuse is blown, the engine starter motor will not operate even if the reverse lever is in the forward (down) position.	Reverse lever in "Reverse" position (UP). Move lever to forward (DOWN) position.*	
	25A fuse open (blown). Replace fuse. Determine cause of failure.	See Reverse Module / Fuse Access, page 19.32
	Poor wiring connection. Verify all wiring is connected and clean.	
"R" Displayed too early or too late in reverse lever travel range	Reverse linkage adjustment incorrect.	See below for switch contact test. Adjust linkage rod.
	Reverse switch malfunction or switch mounting bracket bent.	
Engine kills when transmission shifted into gear.	Reverse switch contacts open (no ground on Pin C at module). Reverse lever in Reverse position or linkage adjustment incorrect.	Move lever back to the Forward position (down) or adjust shift linkage.
Difficulty moving lever into or out of Reverse position	Reverse gear idler shaft dirty. Lubricate shaft at every oil change.	Lubricate idler shaft.

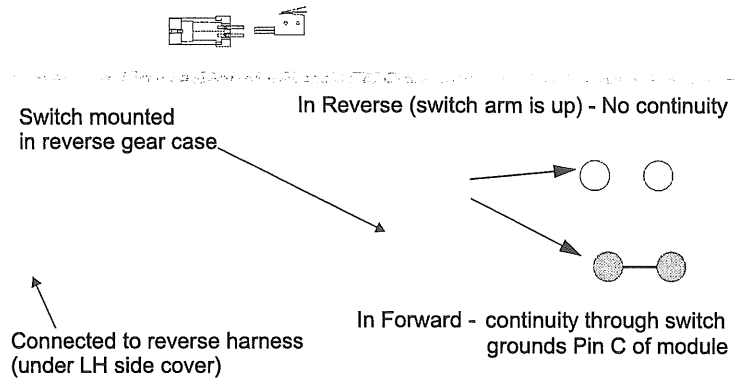

Reverse Switch Inspection

1. Disconnect switch (under left side cover).
2. Connect one lead of Ohmmeter to switch wire and the other to engine ground.
3. Place Reverse lever in forward (Down).
4. Resistance should be less than 1 Ohm to ground (good continuity).
5. Slowly lift reverse lever while observing the Ohmmeter reading. Lever must move at least 6mm (1/4 inch) and no more than 12mm (1/2 inch) before the switch opens (no continuity).
6. If switch opens and closes out of the range above, adjust linkage rod (Chapter 11). Replace switch if always grounded or open.

REVERSE SYSTEM SAFETY

NOTE

Do not attempt to engage or disengage the reverse system when the motorcycle is moving.

BEFORE operating in reverse	NEVER operate in reverse
Always sit on the motorcycle with legs astride and both feet on the ground. Always check for obstacles or people behind the motorcycle. Always retract the sidestand fully. Always make sure the motorcycle is completely stopped.	When not properly seated. When in an area where obstacles or bystanders are present. With a passenger on board. A passenger can obstruct your view and maneuverability. On loose or slippery surfaces. Loss of foot traction could cause a tip-over. While the motorcycle is moving forward. When on a grade or uneven surfaces.

OPERATING THE REVERSE SYSTEM

1. Check the area behind and around the motorcycle for obstacles or people. Be aware that the front wheel may travel outward and require a larger operating area.
2. Make sure the motorcycle is stationary.
3. Dismount any passenger.
4. Straddle the motorcycle and bring it to the fully upright position. Sit in a normal riding position with legs astride and both feet on the ground.
5. Retract the sidestand.
6. Place the transmission in neutral. Start the engine and allow it to idle.
7. Lift the reverse lever and verify that the reverse indicator (R) displays in the Information Display.
8. Recheck the area behind and around the motorcycle to ensure a clear operating area.
9. While balancing the motorcycle with your legs and feet, press and hold the START button to begin moving in reverse. Release the button to stop moving.
10. When completely stopped, move the reverse lever down to the disengaged position. Verify that the neutral indicator (N) displays before stopping the engine.

NOTE

The engine will stop if you shift into forward gear before disengaging the reverse lever.

REVERSE MODULE / FUSE ACCESS

1. Remove left saddlebag.
2. The reverse module and the reverse system fuse are located on the rear fender debris flap.
3. Lift tab and separate connector from module.

NOTE

The starter system will not function with the reverse module disconnected, or if the 25A fuse is open (blown). On models equipped with Reverse, the tachometer signal test (Tachometer Signal Test, page 19.12) can be performed at this connector, but the engine must be started BEFORE disconnecting the harness from the reverse module.

ELECTRICAL SYSTEM BREAKOUTS

SPEEDOMETER (CROSS COUNTRY / CROSS COUNTRY TOUR)

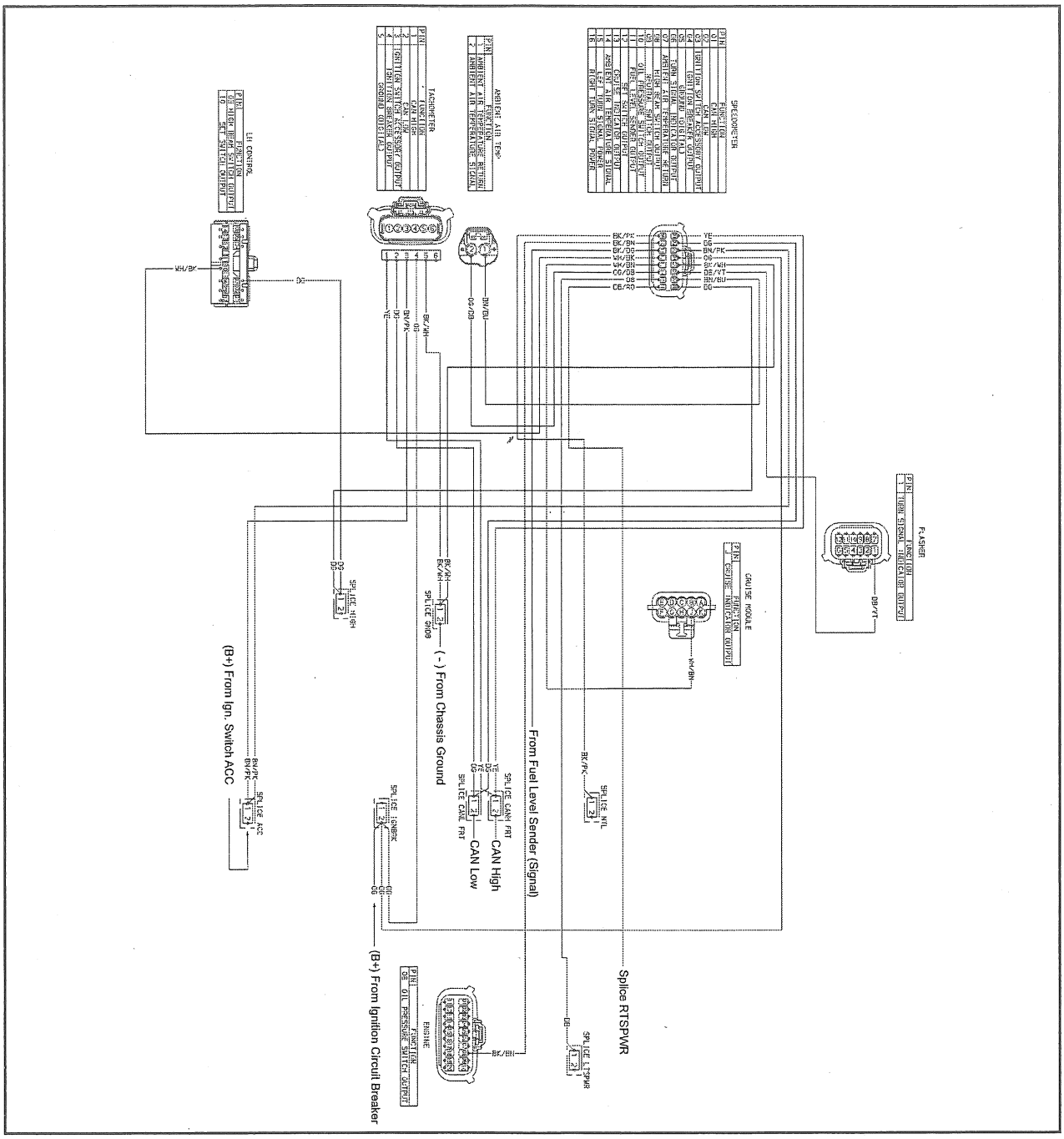

19

TRUNK

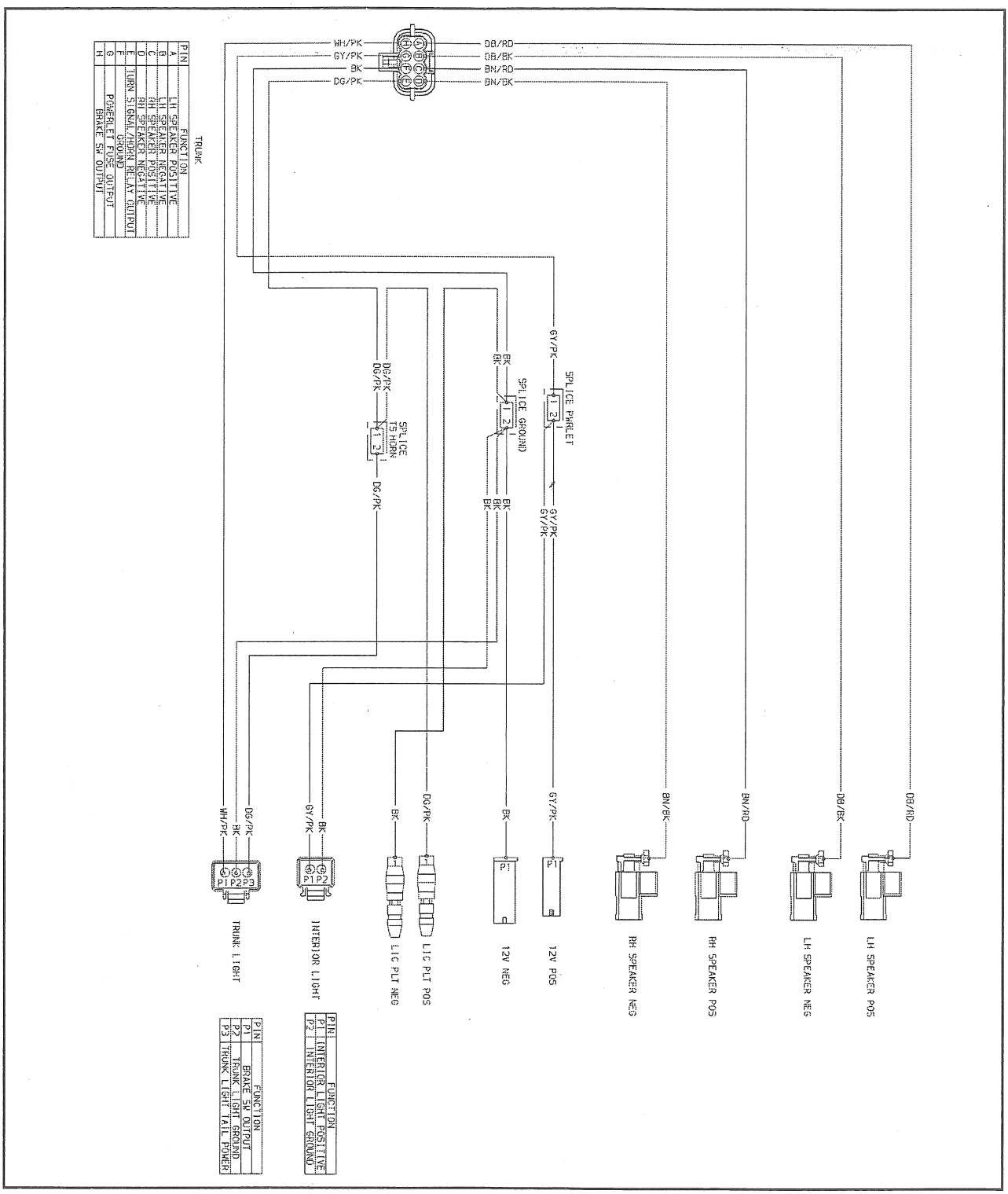
TRUNK
PIN FUNCTION
A LH SPEAKER POSITIVE
B LH SPEAKER NEGATIVE
C RH SPEAKER POSITIVE
D RH SPEAKER NEGATIVE
E TURN SIGNAL/HORN RELAY OUTPUT
F GROUND
G PGM-FEI FUSE OUTPUT
H BRAKE SW OUTPUT
WH/PK
GY/PK
BK
DG/PK
DB/RD
DB/BK
BN/RD
BN/BK
SPLICE PIGTAIL
SPLICE GROUND
SPLICE TO HORN
GY/PK
BK
DG/PK
BN/BK
BN/RD
DB/BK
DB/RD
LH SPEAKER POS
LH SPEAKER NEG
RH SPEAKER POS
RH SPEAKER NEG
12V POS
12V NEG
LIC PLT POS
LIC PLT NEG
INTERIOR LIGHT
TRUNK LIGHT
PIN FUNCTION
P1 INTERIOR LIGHT POSITIVE
P2 INTERIOR LIGHT GROUND
PIN FUNCTION
P1 BRAKE SW OUTPUT
P2 TRUNK LIGHT GROUND
P3 TRUNK LIGHT TAIL POWER

FAIRING (CROSS COUNTRY / CROSS COUNTRY TOUR)

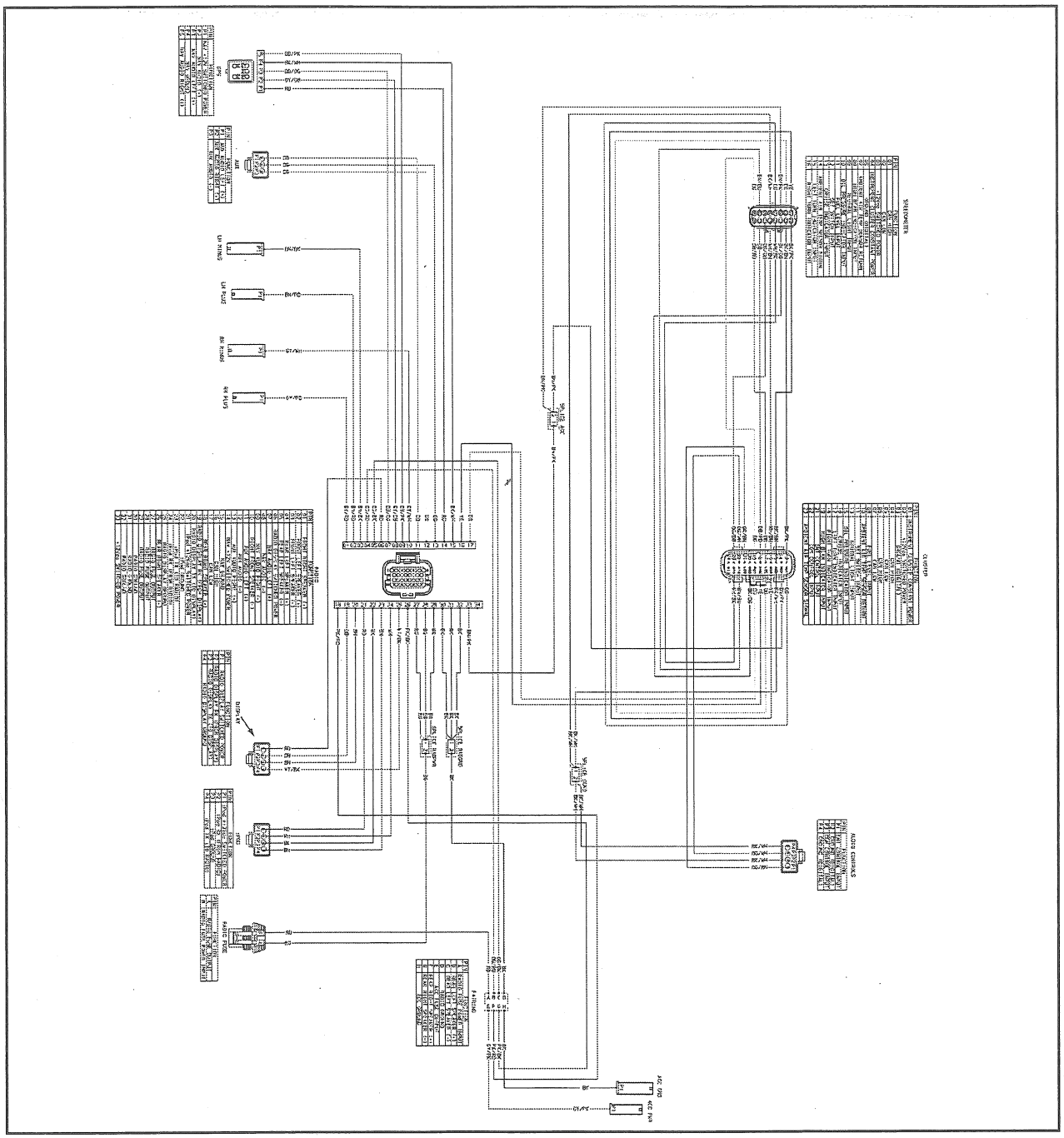

FAIRING (MAGNUM)

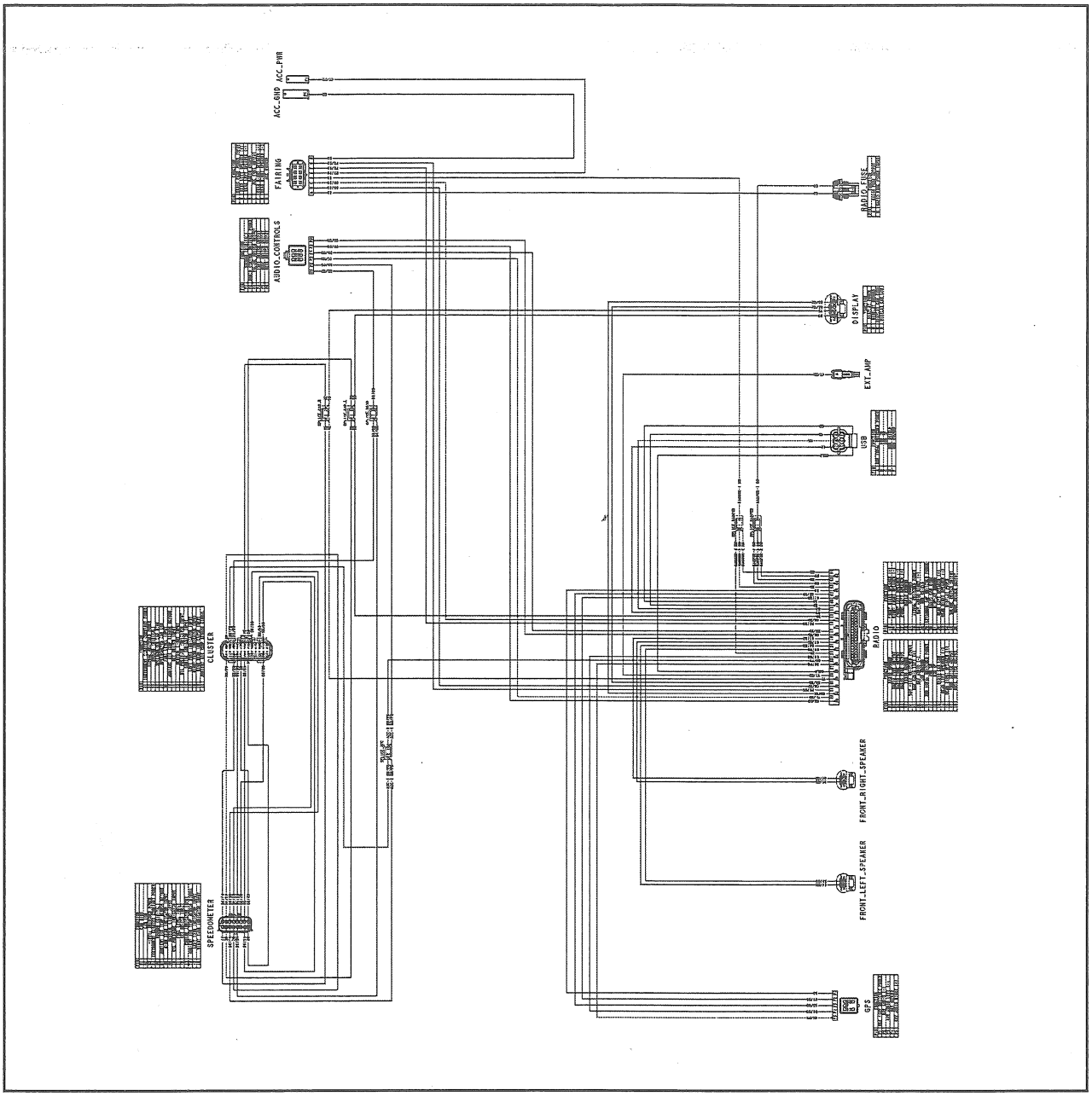

SADDLEBAG SPEAKERS

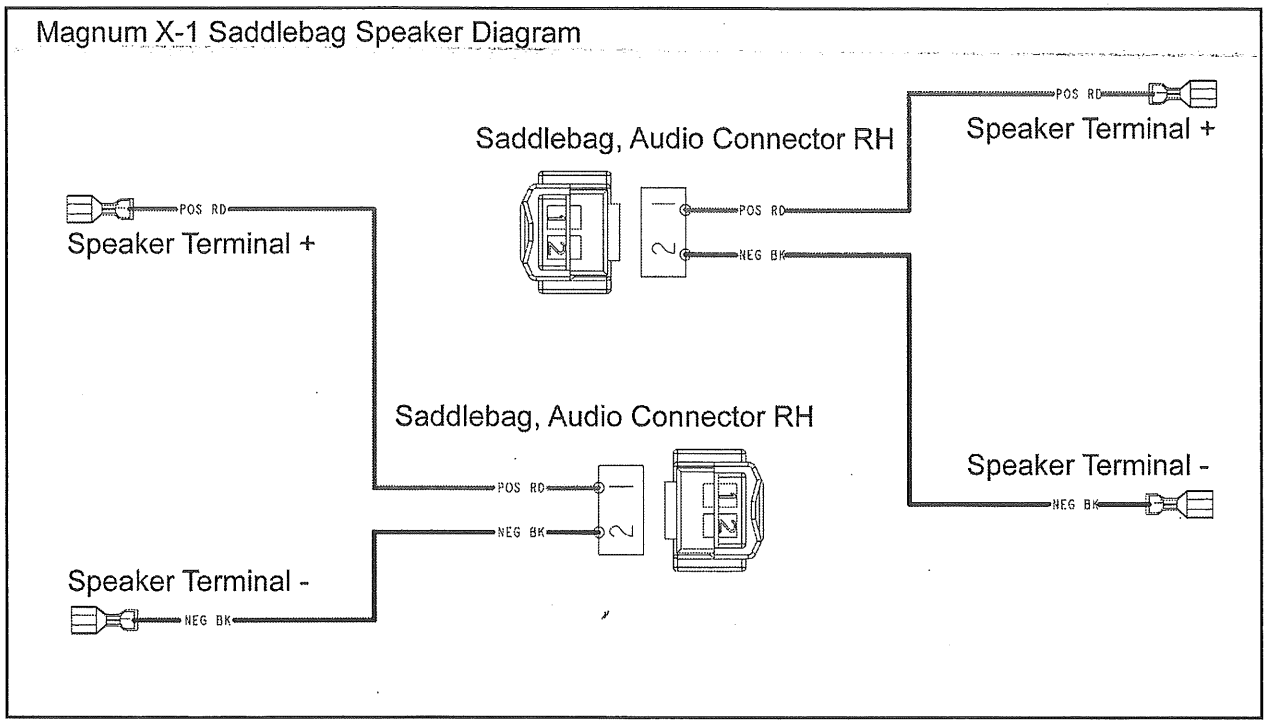

NOTES

A

ABS
- Bleeding, Rear 15.21
- Circuit Diagram 15.16
- Fluid Change / Bleeding 15.21
- Front Brake System Bleeding 15.22
- General Information 15.6
- Overview of Operation 15.7
- Pressure Flow Diagram 15.15
- System Components 15.7
- Trouble Codes 15.42
- Troubleshooting 15.45
- Vacuum Bleeder 15.21
- Wheel Speed Sensor
  - Adjustment 15.18
- Wheel Speed Sensor, Removal 15.17

ABS Module
- Assembly View 15.11
- Replacement 15.18

Activation 1.49

Adjustment
- Front Brake Lever 1.39

Air Filter 2.6

Air Intake
- Assembly View 5.15

Air Pressure Label, Rear Shock 1.8

Air Temperature Sensor
- Diagnostics 5.53

Alternator 16.2

AM Radio 1.42

Amperage Output Test 16.10

Angle Sensor 19.15

Antenna 1.53

Antenna Mount 3.31

Assembly View
- Clutch Shaft 10.10
- Countershaft 10.10
- Crankcase Components 10.6
- Headlight (Halogen) 19.3
- Headlight (HID) 19.4
- Headlight (LED) 19.5
- Mainshaft 10.10
- Primary Drive 9.24
- Rear Wheel (Billet) 13.7
- Rear Wheel (Cast) 13.6
- Rear Wheel & Axle 13.4
- Rear Wheel, Spoked 13.8
- Shift Fork/Drum 10.11
- Swingarm & Suspension Linkage 13.5
- Transmission 10.9

Audio Buttons 1.39

Audio Compliance Information 1.72

Audio Controls
- Menu Options 1.59

Audio Features 1.58
- AM Radio 1.42, 1.58
- Automatic Volume Control (AVC) 1.44
- AUX 1.42
- Aux Mode 1.45
- Bass Setting 1.44
- CB Headset Entertainment Mode 1.45
- CB Local (LO) / Distant (DX) 1.45
- CB Volume 1.45
- Fader Setting 1.44
- FM Radio 1.42, 1.58
- Intercom (ICOM) Volume 1.45
- iPod 1.42
- Long Wave (LW) 1.43
- Medium Wave (MW) 1.43
- Memory Presets 1.43
- Mute 1.41
- RDS 1.45
- Source Selection 1.42
- Speakers, External 1.44
- System Power 1.41
- Treble Setting 1.44
- Tuning, Audio 1.43
- Volume Features 1.41
- Weather Band 1.42
- Weather Band (NOAA) 1.46
- Weather Band Channels 1.46
- XM Radio 1.42
- XM Radio Category 1.46
- XM Radio Display 1.46

Audio System 1.58
- Controls (8-Ball) 1.57
- GPS Interface (8-Ball) 1.57
- Introduction (8-Ball) 1.57
- Siri Eyes Free 1.67

Audio systems
- Low Voltage Mute 1.61
- Selecting Audio Sources 1.61
- System Power 1.60

Audio Systems
- Audio Controls 1.59
- Audio Display 1.60
- Audio Display Zones 1.60
- Audio Mode Menus 1.67
- Frequencies (Overview) 1.40, 1.58
- Left Hand Controls (Lower) 1.40
- Left Hand Controls (Upper) 1.40
- Main User Interface 1.40
- Mute 1.61
- Overview of Operation 1.40
- Passenger Controls 1.41
- Push-To-Talk (PTT) 1.61
- System diagnostics 1.72
- USB Connector 1.60
- Voice Recognition Mode 1.67
- Volume 1.61

Automatic Volume Control (AVC) 1.44

AUX 1.42
- Getting Started 1.50
- iPod Input Cable 1.50
- iPod Play Lists 1.51
- iPod Tuning 1.52

Aux Mode 1.45

Auxiliary Lights
- Removal/Installation 3.15

Axle
- Inspection (Front) 12.26

B

Balance Shaft
- Installation 10.32
- Removal & Inspection 10.32

Ballast, HID 3.15

Base Gasket Sealing 8.2

Bass Setting 1.44

Battery
Charging 2.22, 16.7
Current Drain Test 16.9
Installation 2.23
Load Test 16.9, 18.8
Maintenance 2.21
Removal 2.22, 16.7
Safety 16.5
Storage 2.22
Troubleshooting 16.8
Battery Box 16.3
Battery Voltage At PCM Test 5.57
Belt
Inspection 11.6
Installation 11.6
Removal 11.6
Wear 2.24
Belt Guard 11.5
Belt Tension 2.26
Belt Tension Adjustment 2.28
Bezel
Headlamp (Cross Country) 3.11
Bezel (Cross Country) 3.26
Bleeding,
Rear Brakes 15.21
Brake Caliper
Installation (Front) 15.35
Installation (Rear) 15.42
Service (Front) 15.32
Service (Rear) 15.40
Brake Disc
Inspection 15.29
Installation (Front) 12.27
Installation (Rear) 13.15
Removal (Front) 12.27
Removal (Rear) 13.15
Brake Fluid
Filling & Bleeding, ABS 15.21
Replacement 15.20
Warnings & Precautions 15.20
Brake Lever Lubrication, Front 2.14
Brake Lever Reserve 15.23
Brake Light Switch
Testing 19.14
Brake Pad
Inspection 2.18
Brake Pads
Replacement (Front) 15.25
Replacement (Rear) 15.27
Brake Pedal
Rear 2.19
Brake System
Safety 15.3
Service Specifications 15.4
Special Tools 15.4
Torque Specifications 15.5
Troubleshooting 15.43
Brakes
Assembly View (Front) 15.8
Assembly View (Rear) 15.9
Front Fluid Level 2.16
Rear Fluid Level 2.17
Brakes, Front
Lever Reach 1.39
Break In Procedure 1.19
Breather Inspection
Crankcase Ventilation 2.20
Buttons, Audio & Cruise 1.39

C

Caliper
Front Brake 15.14
Installation (Front) 15.35
Installation (Rear) 15.42
Rear Brake 15.15
Service (Front) 15.32
Service (Rear) 15.40
Cam Chain Sprocket 7.10
Cam Chain Tensioner 7.8
Inspection 7.10
Installation 7.10
Cam Drive & Valve Cover 7.4
Camshaft
Chain Guide 7.23
Chain Tensioner 7.8
Chain Tensioner Inspection 7.10
Chain Tensioner Installation 7.10
Drive Cover 7.8
Front Cylinder Timing 7.24
Inspection 7.12
Installation 7.21
Camshaft Carrier
Assembly View 7.5
Camshaft Carrier Removal 7.11
Camshaft Timing
Front Cylinder 7.24
Quick Reference 7.7
Rear Cylinder 7.22
Categories, SiriusXM Radio 1.54
Category Selection 1.54
CB Headset Entertainment Mode 1.45
CB Local (LO) / Distant (DX) 1.45
CB Radio
Channel Adjustment 1.47
Channels & Frequencies 1.49
FCC Plain Rules Pamphlet 1.47
Headset Use 1.47
Local (LO) / Distant (DX) Setting 1.49
Push-to-Talk (PTT) 1.48
Squelch 1.48
Volume (Driver) 1.48
Volume (Passenger) 1.48
CB Radio / ICOM System
Getting Started 1.47
CB Volume 1.45
Celsius to Fahrenheit Chart 1.77
Chain Guide Installation 7.23
Channel Adjustment 1.47
Channel Selection 1.54
Channels & Frequencies 1.49
Channels, CB Radio 1.49
Charging
Battery 2.22, 16.7
Charging System
Output Test 16.10
Special Tools 16.6
Specifications 16.2
Charging System & Alternator
Torque Specifications 16.2
Chassis to Engine Harness Connector 5.48

Chin Fairing Grill 3.22
Cleaning....2.40
Clock (Cross Country / Magnum) 1.34
Cluster
  Instrument (Cross Country) 19.19
Clutch
  Assembly 9.21
  Assembly View 9.4, 9.16
  Cable / Lever Assembly 12.8
  Disassembly 9.17
  Inspection....9.19
  Installation 9.23
  Pinion Shaft 9.10
  Pinion Shaft Removal.... 9.8
  Removal....9.17
  Specifications 9.3
  Spring....9.19
  Spring Compressor....9.17
  Troubleshooting 9.38
Clutch Cable
  Removal / Installation 12.22
Clutch Lever
  Free Play....2.16
  Lubrication....2.15
Clutch Shaft
  Assembly View 10.10
  Inspection....10.18
  Installation 10.29
  Removal....10.18
Clutch Special Tools....1.24
Clutch Switch
  Installation 18.12
  Removal....18.12
  Test....18.10
  Testing 19.14
Component Locations
  Electrical 19.22
Compression Test (Dry) 2.23
Compression Test (Wet) 2.24
Connecting Rod
  Bearing Clearance Inspection 10.25
  Bearing Selection 10.26
  Big End Inspection....10.24
  Installation 10.27
  Removal....10.23
  Side Clearance 10.23
  Small End Inspection 8.9
  Specifications 10.4
  Torque 10.7
Connector Pin Inspection 19.23
Conversion Chart, Fahrenheit to Celsius 1.77
Conversion Table 1.76
Countershaft
  Assembly View 10.10
CPS
  Testing 17.12
Crankcase
  Assembly 10.29
  Assembly & Sealing 10.33
  Components 10.6
  Reed Inspection....10.30
  Separation 10.13
  Torque 10.6
  Torque Pattern....10.33
Crankcase Emission Control....1.20
Crankcase Vent Inspection 2.20
Crankshaft
  Cleaning....10.28
  Endplay Measurement 10.20
  Inspection....10.26
  Removal....10.22
  Specifications 10.4
  Torque 10.7
  Troubleshooting 10.38
Crankshaft & Transmission
  Special Tools....10.3
Crankshaft Position Sensor
  Resistance Testing 17.12
Cruise Control
  Cable Inspection 2.13
  Diagnostics 19.25
  Functions 19.24
  Module....19.27
  Setting 19.24
Cruise Control Buttons 1.39
Current Drain Test 16.9
Current Draw
  Starter Motor 18.20
Cylinder
  Inspection.... 8.5
  Installation 8.11
  Removal.... 8.5
  Troubleshooting 8.12
  Warp Measurement 8.7
Cylinder Bore
  Inspection.... 8.5
Cylinder Head
  Assembly 7.20
  Assembly View 7.6
  Disassembly 7.14
  Inspection....7.15
  Installation 7.21
  Removal....7.13
  Valve Guide 7.17
Cylinder Head & Valve Train
  Specifications 7.3
  Troubleshooting 7.27
Cylinder Head Temperature Sensor....5.54
Cylinder Leakage Test 2.24

D

Dash Panel 3.17
De-pressurizing the Fuel System 5.17
Decimal Equivalent Chart....1.75
Diagnostic Flow Chart
  Starter System....18.6
Digital Wrench
  Communication Errors....5.59
  Data Grid Examples....5.61
  Guided Diagnostics 5.59
  Reprogramming Tips....5.63
  Software Version....5.58
  Special Tools....5.58
Diode Leakage Test 16.14
Disc
  Brake Inspection 15.29
Display Units, Changing....1.35
Drive Belt
  Adjustment 2.28
  Cleaning....2.27

Condition....2.25
Inspection....11.6
Installation....11.6
Removal....11.6
Drive Belt Tension Inspection....2.26
Drive Belt Wear Analysis....2.24
Drive Line
Special Tools....11.2
Torque Torque....11.3
Troubleshooting....11.16
Drive Sprocket....11.4
Fastener Torque....11.4
Inspection....11.8
Installation....11.8
Removal....11.7
Drive Train....10.4

E

ECM Reflash....5.64
ECM Replacement....5.58
EFI Circuit Wiring Diagrams....5.49
Electric Starter....18.2
Torque Specifications....18.2
Electrical Special Tools....1.23
Electrical System....16.2
Emergency Flashers....1.37
Emission Control
Noise....1.7
Vehicle....1.7
Emission Control Systems....1.20
End Gap Measurement....8.8
Engine
Cylinder Head Assembly....7.20
Cylinder Head Disassembly....7.14
Cylinder Head Inspection....7.15
Cylinder Head Removal....7.13
Installation....6.12
Oil & Filter Change....2.10
Oil Capacity....2.10
Oil Level....2.9
Oil Specifications....6.2
Removal....6.4
Special Tools....6.2, 8.2
Start Switch....1.39
Stop Switch....1.39
Torque Specifications (mounting)....6.3
Engine Error Codes....1.34
Engine Number Location....1.8
Engine Special Tools....1.24
Engine Stop....1.39
Engine to Chassis Harness Connector....5.48
Error Code Table....5.47
Evaporative Emission Control (California Models)....1.21
Evaporative Emission System (Cal)....5.11
Exhaust
Head Pipe....3.48
Muffler....3.47
Special Tools....3.4
Exhaust Emission Control....1.20
Exhaust System
Assembly View....3.46

F

Fader Setting....1.44
Fahrenheit to Celsius....1.77
Failure Mode Indicator (FMI)....1.34
Fairing
Assembly View (Cross Country)....3.18
Front Lower....3.24
Wiring Diagram....19.35
Fairing (Cross Country)....3.16
Fairing (Magnum)....19.36
Fairing Assembly (Magnum)....3.20
Fast Idle Speed....2.11
Fault Codes
Chart....5.45
Viewing and Clearing....5.43
FCC Plain Rules Pamphlet....1.47
FCC Plain Rules Pamphlet (CB Radio)....1.47
Fender
Front....3.5
Flasher Module Input / Output Table....19.8
Floorboard
Passenger....3.44
Floorboard & Foot Control....3.41
Fluid Level....2.16
Flywheel
Assembly View....9.24
Installation....9.29
Removal....9.29, 16.18
FM Radio....1.42
FMI Codes....5.47
Foot Control Adjustment....2.19
Footrest
Passenger....3.43
Fork
Disassembly....12.31
Inspection....12.36
Installation....12.31
Oil Level....12.39
Removal....12.30
Seal....12.34
Tube Assembly Process....12.37
Fork Assembly - Cross Country / Roads....12.10
Fork Assembly, Magnum / X-1....12.11
Fork Attachments
Assembly View....12.9
Fork Tube
Installation....12.14
Frame, Body & Exhaust
Safety....3.3
Frequencies (Overview)....1.40
Frequencies Overview....1.58
Frequencies, CB Radio....1.49
Front Axle
Assembly View....12.13
Inspection....12.26
Front Brake
Assembly View....15.8
Front Brake Caliper....15.14
Front Brake Fluid Level....2.16
Front Brake Lever....1.39, 2.14
Front Brake System Bleeding....15.22
Front Caliper
Installation....15.35
Front Caliper Service....15.32
Front Fender....3.5

Front Fork
Inspection....2.37
Front Master Cylinder
Installation....15.32
Removal....15.29
Front Turn Signal....3.22
Front Wheel
Billet....12.17
Cast....12.16
Inspection....12.26
Removal....12.26
Spoked....12.18
Front Wheel / Suspension
Special Tools....12.3
Troubleshooting....12.50
Front Wheel & Suspension
Specifications....12.4
Fuel
Filter....2.20
Fuel Cap....5.8
Fuel Filter
Replacement....5.22
Fuel Injection
Component Location....5.38
Overview Of Operation....5.41
Service Precautions....5.4
System Self Diagnostics....5.43
Fuel Injection Sensor Diagnostics....5.44
Fuel Level Sensor....5.12
Bypass Test....5.30
Installation....5.24
Removal....5.24
Resistance Test....5.30
Fuel Pressure Specification....5.29
Fuel Pump
Assembly View....5.14
Circuit Diagram....5.28
Current Draw Test....5.33
Diagnostics....5.31
Installation....5.25
Pressure Inspection....5.29
Removal....5.21
Supply Voltage....5.31
Fuel Rail
Removal....5.39
Fuel System
Basic Troubleshooting....5.7
De-pressurization....5.17
Inspection....2.20
Priming....5.17
Safety....5.3
Special Tools....5.6
Specifications....5.6
Troubleshooting....5.67
Fuel Tank....2.6
Assembly View....5.8
Installation....5.20
Mounting....5.8
Removal....5.19
Vent Inspection (Canada)....2.20
Fuel Tank Evaporative Emissions System....5.11
Fuel Tank Vent
49 State....5.10
Inspection....5.18
Fuse
Inspection / Replacement....2.38
Replacement....2.38

G

Garmin....1.56
Gauge....3.21
Cross Country....19.19
Gear Position Indicator....1.29, 19.11
Gear Position Indicator, Cross Country / Magnum....1.34
Gear Ratios....10.4
General Specifications....1.9
Magnum / Magnum X-1....1.11
General Specifications, Cross Country....1.9
Getting Started....1.47, 1.50, 1.53
GPS....1.56
Grip Heater
Switch Location....1.36
Grips
Heated....19.20
Ground Circuit Test....18.9
Ground Continuity Test....16.13
Ground Wire Locations....19.23
Guidelines, Transporting....1.27

H

Handgrip Heater Switch....1.36
Handlebar
Assembly View....12.6
Removal....12.19
Riser Assembly (Cross Country) (Magnum)....12.7
Hazard....1.37
Hazard Switch....1.37
Hazard System Circuit....19.8
Head Pipe....3.48
Headlamp
Aim Inspection....2.30
Assembly View (LED)....19.5
Assembly View, Halogen....3.13
Assembly View, HID....3.13
Assembly View, LED....3.14
HID....3.12
LED....3.12
Headlamp Aim
Adjustment....2.31
Headlamp Bezel (Cross Country)....3.11
Headlamp Circuit Wiring....19.6
Headlamp, Halogen....3.11
Headlight
Assembly View (Halogen)....19.3
Assembly View (HID)....19.4
Headset Use....1.47
Headset Use, CB Radio....1.47
Heated Hand Grip
Wiring Diagram....12.49
Heated Hand Grips....19.20
Heated Seat....19.20
HID
Ballast Removal & Installation....3.15
High Beam Switch....1.37
Highway Bars....3.23
Horn Circuit....19.18

I

IAC 5.34
ICOM System
  Activation 1.49
  Voice Activation (VOX) 1.49
  Volume (Driver) 1.50
  Volume (Passenger) 1.50
Idle Air Control
  Assembly View 5.16
  Diagnostics 5.55
  Removal 5.34
Idle Air Control (IAC) Cover Removal / Installation 3.6
Idle Air Control (IAC) Cover, Cast
  Removal / Installation 3.6
Idle Speed 2.11
Idle Stop Screw 5.7
Ignition CircuitWiring Diagram 17.5
Ignition Coil
  Installation 17.4
  Primary Circuit Test 17.10
  Removal 17.4
Ignition Switch 1.28
  Lubrication 2.40
  Removal 17.4
Ignition Switch Cover Removal / Installation 3.6
Ignition Switch Cover, Cast
  Removal / Installation 3.6
Ignition System 17.2
  Safety 17.2
  Spark Test 17.8
  Special Tools 17.2
  Specifications 17.2
  Torque Specifications 17.3
  Troubleshooting 17.5
  Troubleshooting Chart 17.7
Indicator Lights
  Cross Country / Magnum 1.32
  Cross Roads 1.30
Information Display Error Codes 5.47
Injector
  Removal 5.39
Instrument Bezel (Cross Country) 3.26
Instrument Cluster 3.21
  Changing Units 1.35
  Cross Country / Magnum 1.32
  Cross Roads 1.30
Instrument Cluster (Cross Country) 19.19
Intercom (ICOM) Volume 1.45
iPhone 1.58
iPod 1.42, 1.58
iPod Input Cable 1.50
iPod Play Lists 1.51
iPod Song Control and Tuning 1.52
iPod Tuning 1.52

K

Key Identification Number 1.8
Key Off Current Draw Test 16.9

L

Leakage Test 2.24
Left Hand Controls (Lower) 1.40
Left Hand Controls (Upper) 1.40
Lever Reach 1.39
Load Test 16.9, 18.8
Local (LO) / Distant (DX) Setting 1.49
Location, Engine Number 1.8
Location, Key Identification Number 1.8
Lock Cylinder
  Lubrication 2.40
Long Wave (LW) 1.43
Low Beam Switch 1.37

M

Main Bearing
  Inspection 10.28
  Oil Clearance Inspection 10.28
Main User Interface 1.40
Mainshaft
  Assembly View 10.10
Maintenance
  Battery Installation 2.23
  Battery Removal 2.22
  Cable Inspection / Lubrication 2.12
  Drive Belt 2.25
  Drive Belt Wear Analysis 2.24
  Front Brake Fluid 2.16
  Front Brake Lever 2.14
  Rear Brake Fluid 2.17
  Rear Brake Pedal 2.19
  Shift Pedal 2.19
  Throttle Cable 2.13
Maintenance Special Tools 1.23
Master Cylinder
  Installation (Front) 15.32
  Installation (Rear) 15.39
  Removal (Front) 15.29
  Service (Rear) 15.36
Master Cylinders
  Assembly View 15.10
Medium Wave (MW) 1.43
Memory Check Sum Error 5.56
Memory Presets 1.43
Menu Options 1.53
Mirrors 3.7
Mode Button 1.37
Model Number Designation 1.6
Model Number Location 1.7
MP3 Player (Navigation Unit) 1.45
Muffler 3.47
Multi-Function Display
  Cross Country / Magnum 1.33
Multi-Function Display (MFD)
  Changing Units 1.35
  Cross Roads 1.29
Mute 1.41

N

NAV / MP3 ..... 1.56
Neutral Switch
  Removal 19.14
  Test 18.9
  Testing 19.14

No Signal....1.53
Noise....1.7
Noise Emission Control....1.7
Noise Emission Control System....1.20

O

Odometer Function, Cross Country / Magnum....1.34
Odometer, Cross Country / Magnum
  Operation....1.35
Oil & Filter Change....2.10
Oil Capacity....2.10
Oil Change
  Specifications....2.4
Oil Cooler....4.7
  Inspection/Cleaning....4.6
  Installation....4.6
  Removal....4.6
Oil Cooler and Lines
  Assembly View....4.5
Oil Flow Diagram....4.4
Oil Level....2.9
Oil Line
  Installation....4.6
  Removal....4.6
Oil Pressure....4.7
Oil Pressure Relief Valve....4.11
Oil Pump
  Assembly....4.14
  Disassembly....4.13
  Inspection....4.12
  Installation....4.16
  Removal....4.9
Oil System
  Overview....4.2
  Specifications....4.3
  Troubleshooting....4.2
One-Way Clutch
  Installation....9.36
Ordering Special Tools....1.26
Output Test....16.10
Overview....1.53
Overview of Operation....1.40
Owner's Manual Part Numbers....1.14
Oxygen Sensors
  1-Wire O2 Sensors, 2012-2015....5.40
  Oxygen Sensors
    4-Wire O2 Sensors, 2016+....5.40
  Wiring Diagram....5.40
Ozone Cracking....14.3

P

Paint Care....2.41
Paint Color by Model....1.15
Paint Color Codes....1.17
Paint Colors, Models....1.15
Passenger Controls....1.41
Passenger Floorboard
  Assembly View....3.44
PCM Battery Voltage Test....5.57
PCM Connector Access....5.48
PCM Connector Test Precautions....5.47
PCM Removal....5.48
PCM Reprogramming....5.63
Pedal
  Rear Brake....2.19
Pinion Shaft
  Installation....9.10
  Removal....9.8
Piston
  Inspection....8.8
  Installation....8.10
  Pin Inspection....8.9
  Removal....8.7
  Troubleshooting....8.12
Piston Ring
  Installation....8.9
  Removal....8.7
Piston Ring End Gap....8.8
Pressure Relief Valve....4.11
Primary Cover....9.6
  Assembly View....9.6
  Installation....9.13
  Removal....9.10
Primary Drive
  Assembly View....9.24
Primary Drive Gear
  Installation....9.35
  Removal....9.34
Priming The Fuel System....5.17
Publication Part Numbers....1.14
Push-to-Talk (PTT)....1.48

R

Radio Data System (RDS)....1.45
RDS....1.45
Rear Axle
  Inspection....13.10
Rear Brake Caliper....15.15
Rear Brake Disc
  Installation....13.15
  Removal....13.15
Rear Brake Fluid Level....2.17
Rear Brake Pedal....2.19
Rear Brakes
  Assembly View....15.9
Rear Caliper
  Installation....15.42
  Service....15.40
Rear Fender
  Assembly View....3.35
Rear Fender (Magnum)....3.36
Rear Master Cylinder
  Installation....15.39
  Service....15.36
Rear Shock....13.19
Rear Shock Air Pressure Label....1.8
Rear Sprocket
  Inspection....11.10
  Installation....11.10, 13.16
  Removal....11.10, 13.16
Rear Suspension Air Pressure....2.35
Rear View Mirror....3.7
Rear Wheel
  Inspection....13.11
  Installation....13.16
Rear Wheel & Axle

Assembly View 13.4
Rear Wheel & Suspension
Special Tools 13.2
Specifications 13.3
Troubleshooting 13.30
Rear Wheel Bearing
Inspection 13.11
Installation 13.13
Removal 13.11
Reception 1.53
Rectifier 16.4
Voltage Drop Test 16.13
Reed Valve
Crankcase 10.30
Reference Data
Fahrenheit to Celsius 1.77
Reflash 5.64
Reflash, Process Overview 5.63
Regulated Voltage Test 16.10
Regulator / Rectifier
Replacement 16.16
SCR Test 16.15
Testing 16.14
Regulator/Rectifier 16.4
Relay,
Starter Ground Circuit Test 18.9
Removal
Valve Cover 7.8
Reprogramming The PCM 5.63
Resetting Displays 1.37
Resistance Test 16.12
Reverse Drive System 11.11
Reverse Gear Case Assembly View 11.12
Reverse Module Location 19.32
Reverse System 19.28
Module 19.29
Operation 19.32
Reverse System Fuse 11.14, 19.32
Ride Height Adjustment 2.35
Rocker Arm
Assembly View 7.5
Inspection 7.12
Removal 7.11

S

Saddlebag
Assembly View (audio) 3.33
Assembly View (non-audio) 3.32
Speaker Installation (Magnum X-1) 3.30
Speaker Removal (Magnum X-1) 3.29
Saddlebag Speakers, Wiring Diagram 19.37
Saddlebag, Removal / Installation 3.28
Audio Equipped (Magnum X-1) 3.28
SCR Test 16.15
Seat
Heated 19.20
Removal 3.27
Seat Heater, Switch 1.36
Sensor
Angle 19.15
Cylinder Head Temperature 5.54
Speed 19.11
TMAP 5.52
Sensor Diagnostics 5.44
Service Manual Part Numbers 1.14
Service Rules 1.5
Settings, Changing 1.53
Shift Drum
Assembly View 10.11
Inspection 10.19
Shift Fork
Assembly View 10.11
Shift Linkage
Assembly View 9.5
Shift Mechanism
Assembly View 9.7
Shift Pedal 2.19
Shift Pedal Height 9.5
Shift Ratchet
Installation 9.12
Removal 9.11
Shock
Inspection (Rear) 13.22
Installation (Rear) 13.24
Removal (Rear) 13.20
Side Cover 3.27
Side Stand Switch
Testing 19.16
Sidestand
Lubrication 2.32
Service 2.32
Siri Eyes Free 1.67
SiriusXM Radio
Category Selection 1.54
Channel Selection 1.54
Getting Started 1.53
Menu Options 1.53
Overview 1.53
Reception 1.53
Settings, Changing 1.53
SiriusXM Radio, Wiring Diagram 1.55
Software Updates, Radio 1.40
Source Selection 1.42
Spark Plug Service 2.21
Spark Test 17.8
Speaker
Removal 3.15
Speakers, External 1.44
Speakers, Wiring Diagram 19.37
Special Tools
Brake System 15.4
Charging System 16.6
Crankshaft & Transmission 10.3
Cylinder Head & Valves 7.2
Digital Wrench 5.58
Drive Line 11.2
Electrical 1.23
Engine 6.2, 8.2
Exhaust 3.4
Front Wheel / Suspension 12.3
Fuel System 5.6
General 1.22
Ignition System 17.2
Lubrication and Cooling 4.2
Maintenance 1.23, 2.3
Precision Measurement 1.22
Primary Drive / Clutch 9.3
Rear Wheel & Suspension 13.2
Starter System 18.2
Special Tools, Clutch 1.24

Special Tools, Engine 1.24
Special Tools, Ordering Information 1.26
Special Tools, Steering 1.25
Special Tools, Suspension 1.25
Special Tools, Transmission 1.24
Specifications
  Charging System & Alternator 16.2
  Clutch 9.3
  Connecting Rod and Crankshaft 10.4
  Cylinder & Piston 8.4
  Cylinder Head & Valve Train 7.3
  Drive Train 10.4
  Electric Starter 18.3
  Electrical System 16.2
  Front Wheel & Suspension 12.4
  Fuel System 5.6
  Ignition System 17.2
  Oil 6.2
  Oiling System 4.3
  Rear Wheel & Suspension 13.3
  Transmission 10.4
  Wheel 14.2
  Wheel/Tire 14.2
Speed Sensor
  Adjustment 15.18
  Diagnostics 5.56
  Front 15.12
  Rear 15.13
  Test 19.11
Speedometer
  Cross Roads 1.29
Speedometer (Cross Country) 19.33
Split Gear
  Inspection 9.30
  Installation 9.30
  Removal 9.30
SPN Codes 5.47
Spoked Wheel Offset 14.13
Sprocket
  Drive 11.7
  Drive, Inspection 11.8
  Drive, Installation 11.8
  Inspection (Driven) 2.27
  Installation (Rear) 13.16
  Rear, Inspection 11.10
  Rear, Installation 11.10
  Rear, Removal 11.10
  Removal (Rear) 13.16
Sprocket, Cam Chain 7.10
Squelch 1.48
Stake Nut Installation 10.37
Start Switch 1.39
Starter 1.39
  Clutch Installation 9.36
  Clutch Removal 9.32
  Drive Gear Inspection 9.32
  Drive Gear Removal 9.32
  Specifications 18.3
  Torque Limit Clutch Inspection 9.34
Starter Button 1.39
Starter Gear
  Installation 9.36
Starter Interlock 1.38
Starter Motor
  Current Draw 18.20
  Installation 18.22
  Removal 18.22
Starter Relay
  Ground Circuit Test 18.9
Starter Relay Testing 18.13
Starter System
  Diagnostic Flow Chart 18.6
  Special Tools 18.2
  Troubleshooting Flow Chart 18.4
  Wiring Diagram 18.5
Starter, Electric
  Torque Specifications 18.2
Starting In Gear 1.38
Stator
  Ground Continuity Test 16.13
  Installation 16.18
  Output Test 16.11
  Removal 16.18
  Resistance Test 16.12
Steering
  Head Bearing Adjustment 12.15
  Head Bearing Inspection (Triple Clamp Removed) 12.43
Steering Head
  Bearing Replacement 12.46
Steering Special Tools 1.25
Stop Switch 1.39
Storage 2.41
Suede Finish Care 2.41
Suspect Parameter Number (SPN) 1.34
Suspension
  Front Fork Inspection 2.37
Suspension Adjustment
  Rear 2.35
Suspension Special Tools 1.25
Swing Arm
  Bushing 13.27
  Inspection 2.34
  Installation 13.28
  Removal 13.26
Swingarm & Suspension Linkage
  Assembly View 13.5
Switch
  Brake Light Test 19.14
  Clutch 19.14
  Clutch, Installation 18.12
  Engine Stop 1.39
  Hazard 1.37
  Ignition Removal 17.4
  Neutral 19.14
  Side Stand 19.16
  Starter 1.39
  Tipover 19.15
Switch,
  Clutch, Removal 18.12
Switch, High/Low Beam 1.37
Switch, Ignition 1.28
Switch, Mode 1.37
Switch, Turn Signal 1.38
System Power 1.41

T

Tachometer
  Test 19.12
Tail Lamp Circuit Wiring Diagram 19.7
Tail Light

Assembly View 3.40
Tap / Drill Sizes {SAE} 1.74
Temperature Display, Cross Country / Magnum....1.35
Testing 16.14
Throttle Body
Installation 5.36
Removal....5.35
Synchronization 5.7
TPS Adjustment....5.36
Throttle Cable
Inspection....2.13
Removal/Installation 12.23
Throttle Position Sensor
Diagnostics 5.51
Timing
Camshaft....7.22
Camshaft Front Cylinder 7.24
Camshaft Quick Reference.... 7.7
Tipover Switch 19.15
Tire
Balancing 14.8
Cupping 14.3
Inflation / Precautions....14.6
Mounting 14.6
Ozone Cracking 14.3
Pressure/Loading 14.2
Removal....14.4
Wear Causes 14.3
Tire / Wheel
Troubleshooting 14.18
Tire Information Label.... 1.7
Tire Pressure....2.11
Tires
Inspection....2.12
TMAP Sensor....5.52
Torque Compensator
Assembly View 9.24
Inspection....9.26
Removal....9.25
Service 9.27
Torque Specifications 18.2
Brake System....15.5
Charging System & Alternator 16.2
Drive Line 11.3
Electric Starter....18.2
Engine Mounting 6.3
Ignition System 17.3
TPS
Adjustment 5.36
Transmission....10.9
Assembly View 10.9
Gear Train 10.12
Inspection....10.19
Installation 10.31
Power Flow 10.12
Removal....10.17
Specifications 10.4
Troubleshooting 10.38
Transmission Special Tools 1.24
Transporting, Guidelines 1.27
Treble Setting 1.44
Trip Meter, Cross Country / Magnum 1.34
Triple Clamp
Installation 12.44
Removal....12.42
Trouble Codes
ABS 15.42
Fuel Injection System Fault 5.45
Viewing and Clearing 5.43
Troubleshooting
ABS 15.45
Battery....16.8
Brake System....15.43
Clutch....9.38
Cruise Control 19.25
Cylinder & Piston....8.12
Cylinder Head & Valve Train 7.27
Drive Line 11.16
Front Wheel / Suspension 12.50
Fuel System....5.67
Ignition System 17.5
Oil System 4.2
Primary Drive 9.38
Rear Wheel & Suspension 13.30
Shift Linkage 9.38
Starter System....18.4
Transmission & Crankshaft....10.38
Wheel / Tire....14.18
Trunk
Assembly View 3.39
Removal and Installation....3.37
Wiring Diagram 19.34
Tune Up 2.3
Tuning, Audio 1.43
Turn Signal 3.22
Turn Signal Circuit 19.8
Turn Signal Switch....1.38

V

Vacuum Bleeder....15.21
Valve
Inspection....7.15
Valve Cover 7.8
Removal.... 7.8
Valve Guide
Removal....7.17
Valve Seat
Inspection....7.18
Valve Seat Reconditioning....7.18
Valve Spring
Free Length 7.15
Vehicle.... 1.7
Vehicle Emission Control 1.7
Vehicle Emission Control Information....1.20
Vehicle Information
VIN Number.... 1.7
Vehicle Loading 1.13
Vehicle Speed Sensor
Diagnostics 5.56
VIN 1.7
VIN Number 1.7
VIN Number Location 1.7
Visor....3.22
Voice Activation (VOX) 1.49
Voice Activation (VOX), CB Radio 1.49
Voltage Drop Test....16.13
Negative Side....18.18
Positive Side 18.15
Voltage Output Test 16.10
Volume (Driver).... 1.48, 1.50

Volume (Passenger) 1.48, 1.50
Volume Features 1.41
Volume Setting, CB Radio 1.48
Volume Setting, ICOM 1.50

W

Warning Lights
  Cross Country / Magnum 1.32
  Cross Roads 1.30
Weather Band 1.42
Weather Band (NOAA) 1.46
Weather Band Channels 1.46
Wheel
  Front (Billet) 12.17
  Front (Cast) 12.16
  Front (Spoked) 12.18
  Inspection 14.10
  Inspection (Front) 12.26
  Installation (Rear) 13.16
  Lacing 14.16
  Removal (Front) 12.26
  Specifications 14.2
  Truing 14.14
Wheel Alignment
  Rear 2.28
Wheel Bearing
  Inspection 2.37
  Inspection (Front) 12.27
  Installation (Front) 12.28
  Removal (Front) 12.28
Wheel Speed Sensor
  Front 15.12
  Rear 15.13
  Removal 15.17
Wheel, Rear
  Removal 13.9
  Spoked 13.8
Wheel, Rear (Billet)
  Assembly View 13.7
Wheel, Rear (Cast)
  Assembly View 13.6
Windshield (Cross Country Tour) 3.9
Windshield (Cross Country) 3.8
Windshield (Magnum / X-1) 3.10
Windshield Care 2.41
Wiring
  Headlamp 19.6
  Tail Lamp/Brake 19.7
Wiring Diagram
  ABS 15.16
  Electric Start System 18.5
  Ignition Circuit 17.5
  Turn Signal 19.8
  XM Radio 1.55
Wiring Diagrams 39
  Fairing 19.35
  Speedometer (Cross Country) 19.33
  Trunk 19.34
WX Weather Band 1.46

X

XM Category 1.46
XM Channel Name 1.46
XM Radio 1.42, 1.55
  Antenna 1.53
  No Signal 1.53
XM Radio Category 1.46
XM Radio Display 1.46

2012-2015 Cross Country / Cross Roads / Magnum
Chassis Diagram

WIRE COLOR LEGEND	
BG	BEIGE (TAN)
BK	BLACK
BU	LIGHT BLUE
DB	DARK BLUE
BN	BROWN
GY	GRAY
GN	LIGHT GREEN
DG	DARK GREEN
OG	ORANGE
PK	PINK
RD	RED
VT	VIOLET (PURPLE)
WH	WHITE
YE	YELLOW

TWO WIRE COLORS ARE SHOWN WITH MAIN/TRACE COLORS. EXAMPLE:RD/YE = RED WITH YELLOW TRACE.

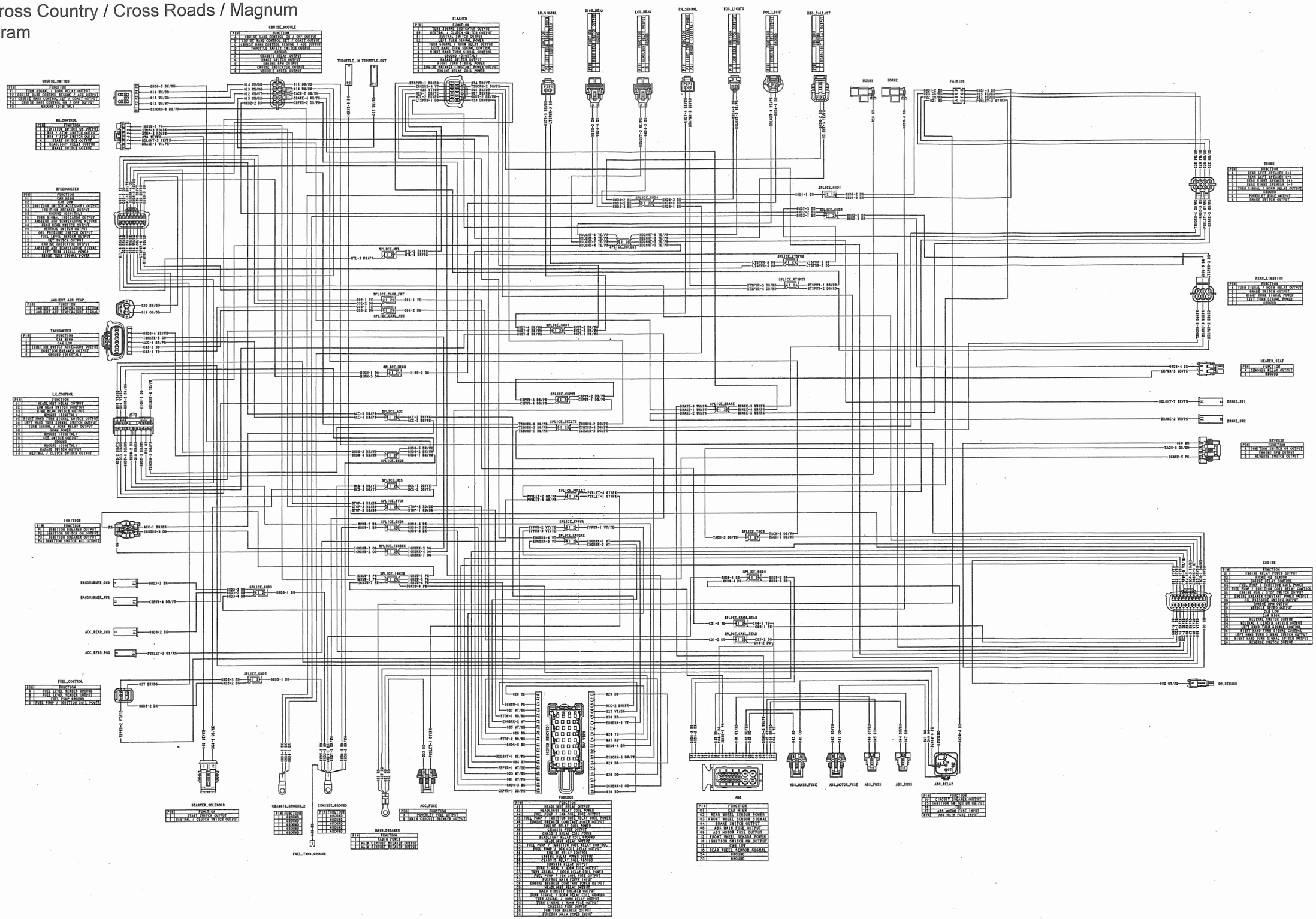

2012-2015 Cross Country / Cross Roads / Magnum

Engine Diagram

WIRE COLOR LEGEND	
BG	BEIGE (TAN)
BK	BLACK
BU	LIGHT BLUE
DB	DARK BLUE
BN	BROWN
GY	GRAY
GN	LIGHT GREEN
DG	DARK GREEN
OG	ORANGE
PK	PINK
RD	RED
VT	VIOLET (PURPLE)
WH	WHITE
YE	YELLOW

TWO WIRE COLORS ARE SHOWN WITH MAIN/TRACE COLORS. EXAMPLE:RD/YE = RED WITH YELLOW TRACE.

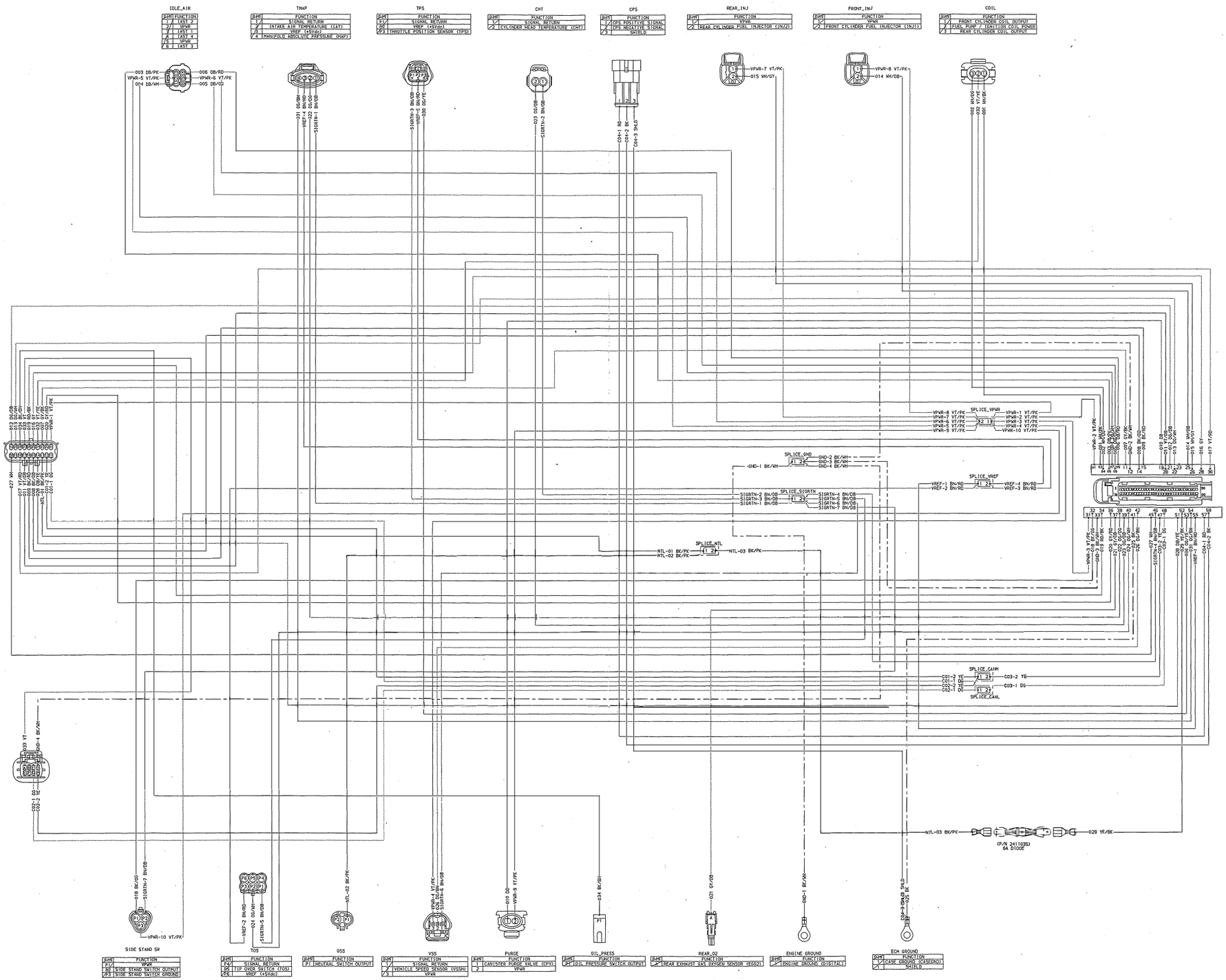

ENGINE	
PIN	FUNCTION
01	ENGINE RELAY POWER OUTPUT
02	FRONT EXHAUST GAS OXYGEN SENSOR (EGO01)
03	POWER SUSTAIN (PWRSTN)
04	FUEL PUMP / IGNITION COIL POWER
06	FUEL PUMP CONTROL (FP)
08	IGNITION SENSE (IGNSNS)
07	ENGINE BREAKER CONSTANT POWER
08	OIL PRESSURE SWITCH OUTPUT
09	CLEAN TACHOMETER OUTPUT (CTO)
10	VEHICLE SPEED OUTPUT (VSO)
11	CAN LOW
12	CAN HIGH
13	NEUTRAL SWITCH OUTPUT
14	CLUTCH SWITCH (CS)
15	LEFT TURN SIGNAL OUTPUT (TSO-L)
16	RIGHT TURN SIGNAL OUTPUT (TSO-R)
17	LEFT TURN SIGNAL SWITCH INPUT (TSR-L)
18	RIGHT TURN SIGNAL SWITCH INPUT (TSR-R)
20	REVERSE MOTOR SWITCH (RMS)

DIAGNOSTIC	
PIN	FUNCTION
A	ENGINE BREAKER CONSTANT POWER
C	GROUND (DIGITAL)
J	CAN LOW
H	CAN HIGH

IDLE_AIR	
PIN	FUNCTION
1	IAST 2
2	VPWR
3	IAST 1
4	IAST 4
5	VPWR
6	IAST 3

TMAP	
PIN	FUNCTION
1	SIGNAL RETURN
2	INTAKE AIR TEMPERATURE (IAT)
3	VREF (+5Vdc)
4	MANIFOLD ABSOLUTE PRESSURE (MAP)

TPS	
PIN	FUNCTION
P1	SIGNAL RETURN
P2	VREF (+5Vdc)
P3	THROTTLE POSITION SENSOR (TPS)

CHT	
PIN	FUNCTION
1	SIGNAL RETURN
2	CYLINDER HEAD TEMPERATURE (CHT)

CPS	
PIN	FUNCTION
1	CPS POSITIVE SIGNAL
2	CPS NEGATIVE SIGNAL
3	SHIELD

REAR_INJ	
PIN	FUNCTION
1	VPWR
2	REAR CYLINDER FUEL INJECTOR (INJ2)

FRONT_INJ	
PIN	FUNCTION
1	VPWR
2	FRONT CYLINDER FUEL INJECTOR (INJ1)

COIL	
PIN	FUNCTION
1	FRONT CYLINDER COIL OUTPUT
2	FUEL PUMP / IGNITION COIL POWER
3	REAR CYLINDER COIL OUTPUT

SIDE STAND SW	
PIN	FUNCTION
P1	VPWR
P2	SIDE STAND SWITCH OUTPUT
P3	SIDE STAND SWITCH GROUND

TPS	
PIN	FUNCTION
P4	SIGNAL RETURN
P5	TIP OVER SWITCH (TOS)
P6	VREF (+5Vdc)

OSS
PIN FUNCTION
P1 NEUTRAL SWITCH OUTPUT

VSS	
PIN	FUNCTION
1	SIGNAL RETURN
2	VEHICLE SPEED SENSOR (VSSH)
3	VPWR

PURGE	
PIN	FUNCTION
1	CANISTER PURGE VALVE (CPV)
2	VPWR

OIL_PRESS
PIN FUNCTION
P1 OIL PRESSURE SWITCH OUTPUT

REAR_O2
PIN FUNCTION
A REAR EXHAUST GAS OXYGEN SENSOR (EGO2)

ENGINE GROUND
PIN FUNCTION
C ENGINE GROUND (DIGITAL)

ECM GROUND	
PIN	FUNCTION
C	CASE GROUND (CASEGND)
A	SHIELD

PIN	FUNCTION
01	VPWR
02	FRONT CYLINDER COIL OUTPUT
03	REAR CYLINDER COIL OUTPUT
05	IAST 2
07	IAST 3
09	IAST 1
08	IAST 4
11	POWER SUSTAIN (PWRSTN)
12	POWER GROUND (PWRGND)
14	LEFT TURN SIGNAL OUTPUT (TSO-L)
15	RIGHT TURN SIGNAL OUTPUT (TSO-R)
19	CANISTER PURGE VALVE (CPV)
20	LEFT TURN SIGNAL SWITCH INPUT (TSR-L)
21	VEHICLE SPEED OUTPUT (VSO)
22	CLEAN TACHOMETER OUTPUT (CTO)
25	FRONT CYLINDER FUEL INJECTOR (INJ1)
26	REAR CYLINDER FUEL INJECTOR (INJ2)
28	FUEL PUMP CONTROL (FP)
30	RIGHT TURN SIGNAL SWITCH INPUT (TSR-R)
31	VPWR
32	SIDE STAND SWITCH OUTPUT
33	POWER GROUND (PWRGND)
34	IGNITION SENSE (IGNSNS)
35	FRONT EXHAUST GAS OXYGEN SENSOR (EGO01)
37	REAR EXHAUST GAS OXYGEN SENSOR (EGO02)
38	INTAKE AIR TEMPERATURE (IAT)
39	CYLINDER HEAD TEMPERATURE (CHT)
40	TIP OVER SWITCH (TOS)
41	CASE GROUND (CASEGND)
42	VEHICLE SPEED SENSOR (VSSH)
45	REVERSE MOTOR SWITCH (RMS)
46	SIGNAL RETURN (SIGRTN)
47	CAN HIGH
48	CAN LOW
51	CLUTCH SWITCH (CS)
52	NEUTRAL SWITCH INPUT (NS)
53	THROTTLE POSITION SENSOR (TPS)
54	MANIFOLD ABSOLUTE PRESSURE (MAP)
55	REFERENCE VOLTAGE (+5Vdc)
57	CPS POSITIVE SIGNAL
58	CPS NEGATIVE SIGNAL

2016-17 Cross Country / Magnum Chassis Diagram

WIRE COLOR LEGEND	
BG	BEIGE (TAN)
BK	BLACK
BU	LIGHT BLUE
DB	DARK BLUE
BN	BROWN
GY	GRAY
GN	LIGHT GREEN
DG	DARK GREEN
OG	ORANGE
PK	PINK
RD	RED
VT	VIOLET (PURPLE)
WH	WHITE
YE	YELLOW

TWO WIRE COLORS ARE SHOWN WITH MAIN/TRACE COLORS. EXAMPLE:RD/YE = RED WITH YELLOW TRACE.

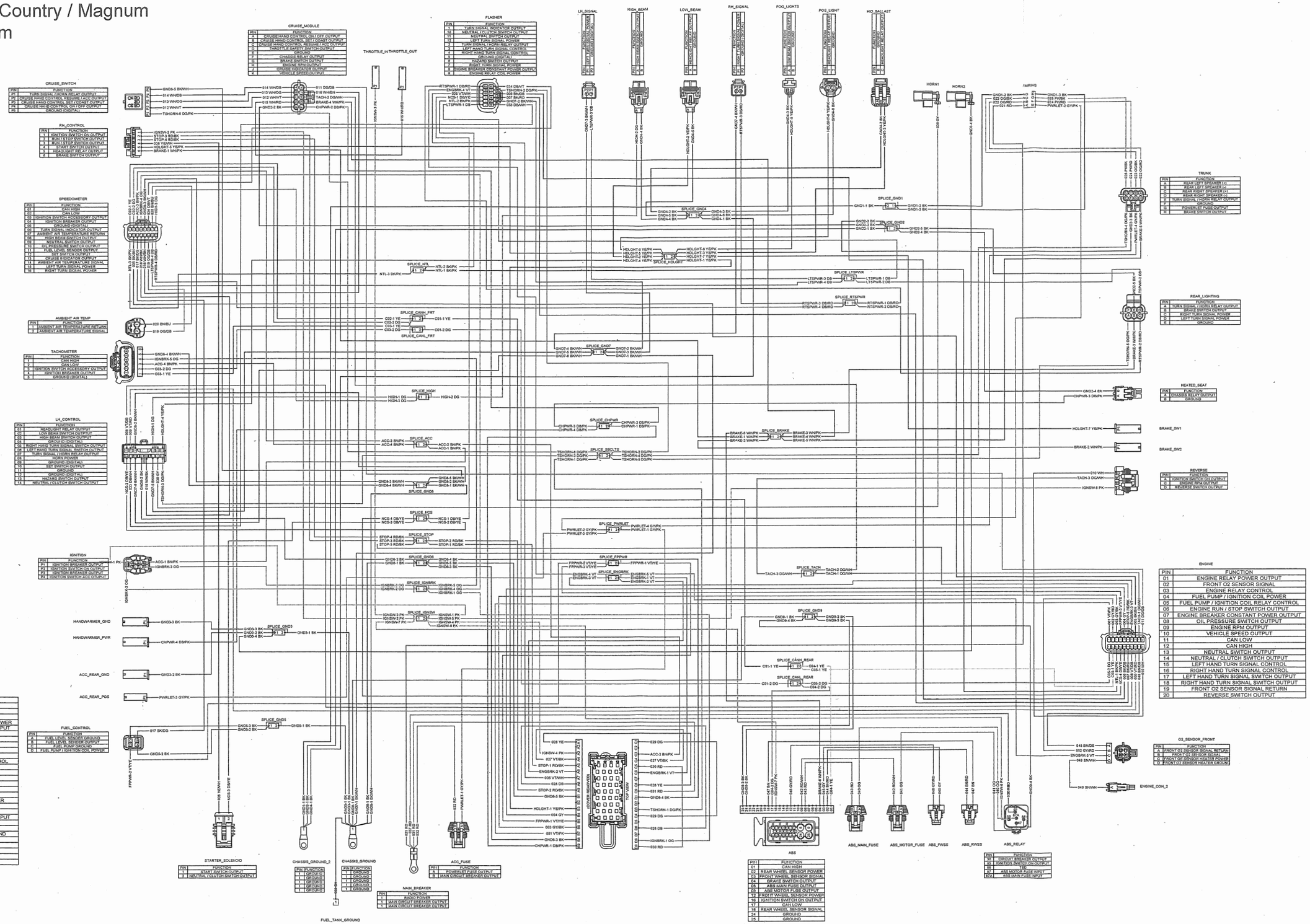

FUSEBOX PINOUT

PIN	FUNCTION
A1	HEADLIGHT RELAY OUTPUT
A3	HEADLIGHT RELAY COIL POWER
A4	FUEL PUMP / IGN COIL FUSE OUTPUT
A5	FUEL PUMP / IGNITION COIL RELAY COIL POWER
A6	ENGINE BREAKER CONSTANT POWER OUTPUT
A7	ENGINE RELAY COIL POWER
A8	CHASSIS FUSE OUTPUT
A9	CHASSIS RELAY COIL POWER
B1	HEADLIGHT RELAY COIL GROUND
B3	HEADLIGHT RELAY OUTPUT
B4	FUEL PUMP / IGNITION COIL RELAY CONTROL
B5	FUEL PUMP / IGN COIL RELAY OUTPUT
B6	ENGINE RELAY CONTROL
B7	ENGINE RELAY POWER OUTPUT
B8	CHASSIS RELAY COIL GROUND
B9	CHASSIS RELAY OUTPUT
C1	TURN SIGNAL / HORN FUSE OUTPUT
C3	TURN SIGNAL / HORN RELAY COIL POWER
C4	FUEL PUMP / IGN COIL FUSE OUTPUT
C5	FUSEBOX MAIN POWER INPUT
C6	ENGINE BREAKER CONSTANT POWER OUTPUT
C8	HEADLIGHT RELAY OUTPUT
C9	MAIN CIRCUIT BREAKER OUTPUT
D1	TURN SIGNAL / HORN RELAY COIL GROUND
D3	TURN SIGNAL / HORN RELAY OUTPUT
D4	TURN SIGNAL / HORN FUSE OUTPUT
D6	CHASSIS FUSE OUTPUT
D8	IGNITION BREAKER OUTPUT
D9	FUSEBOX MAIN POWER INPUT

2016-17 Cross Country / Magnum Engine Diagram

WIRE COLOR LEGEND	
BG	BEIGE (TAN)
BK	BLACK
BU	LIGHT BLUE
DB	DARK BLUE
BN	BROWN
GY	GRAY
GN	LIGHT GREEN
DG	DARK GREEN
OG	ORANGE
PK	PINK
RD	RED
VT	VIOLET (PURPLE)
WH	WHITE
YE	YELLOW
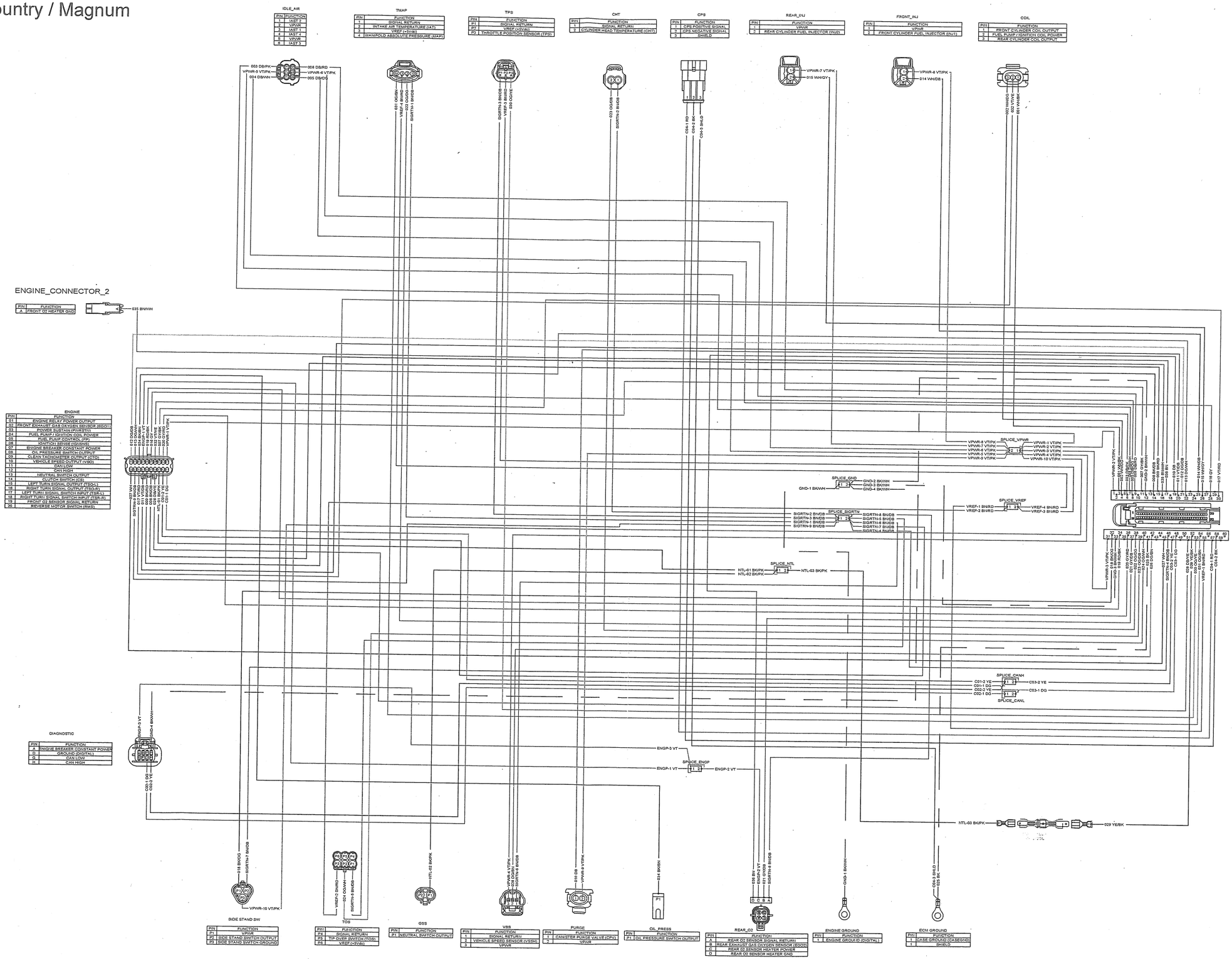
TWO WIRE COLORS ARE SHOWN WITH MAIN/TRACE COLORS. EXAMPLE:RD/YE = RED WITH YELLOW TRACE.