Kawasaki

MICRO-K

# PARTS CATALOG

| | | |
|---|---|---|
| **Year & Model** | **'13 ZR800ADS** | **'14 ZR800AEF** |
| **Color** | 1. CANDY FLAT BLAZED GREEN (35K) | 1. CANDY BURNT ORANGE (15T) |
| | 2. FLAT EBONY TYPE2 (45L) | 2. CANDY FLAT BLAZED GREEN (35K) |
| | 3. PEARL STARDUST WHITE (15S) | 3. METALLIC SPARK BLACK (660) |
| **VIN No. Range** | JKBZR800AADA00048 ~ A07323 | JKBZR800AADA07324 ~ A16393 |
| **Engine No. Range** | ZR800AEA00001 ~ | ZR800AEA00001 ~ |
| **Year & Model** | **'15 ZR800AFF** | **'16 ZR800AGF** |
| **Color** | 1. CANDY FLAT BLAZED GREEN (35K) | 1. CANDY CRIMSON RED (53R) |
| | 2. METALLIC SPARK BLACK (660) | 2. FLAT EBONY TYPE2 (45L) |
| | 3. PEARL STARDUST WHITE (25Y) | 3. PEARL STARDUST WHITE (25Y) |
| **VIN No. Range** | JKBZR800AADA16394 ~ A20200 | JKBZR800AADA20201 ~ |
| **Engine No. Range** | ZR800AEA00001 ~ | ZR800AEA00001 ~ |

**'13～'16 ZR800 ADS/AEF/AFF/AGF**
**(Z800)**

Publications.....A-2
Model Identification.....A-4
Engine.....B-1
Chassis.....E-1

© Kawasaki Heavy Industries, Ltd. 2015

Engine No. Location:
RH side crankcase

| Year & Model | Owner's Manual | A&P Manual | | Service Manual | | Microfiche |
|---|---|---|---|---|---|---|
| | | General | Supplement | Basic | Supplement | |
| **2013 ZR800ADS** | 99976-1736(EN/FR/GE)<br>99976-1737(IT/ES/NL) | | | 99924-1463-01 | | 99912-1811-04 |
| **2014 ZR800AEF** | 99976-1827(EN/FR/GE)<br>99976-1828(IT/ES/NL) | | | 99924-1463-02 | | See above |
| **2015 ZR800AFF** | 99976-1871(EN/FR/GE)<br>99976-1872(IT/ES/NL) | | | 99924-1463-03 | | See above |
| **2016 ZR800AGF** | 99976-1969(EN/FR/GE)<br>99976-1970(IT/ES/NL) | | | 99924-1463-04 | | See above |

# PARTS LIST INFORMATION

This parts catalog lists parts and sub-assemblies provided as spare parts.
When it becomes necessary to replace parts always use KAWASAKI GENUINE PARTS. Strict inspection assures quality and performance of KAWASAKI GENUINE PARTS.

## 1. HOW TO PLACE AN ORDER FOR PART

When ordering parts be sure to use the catalog for the correct model and year of the vehicle. Include the following items exactly as listed in this catalog on your parts order.

Part Number
Part Name
Color Code
Specify the color using both color code (which is part of the part number) and name when ordering painted parts.
Example: 51001-5074-H8 TANK-COMP-FUEL,EBONY

Parts not shown disassembled in the illustrations of this parts catalog are not sold separately; only the complete units or next higher assemblies illustrated, are supplied, as spare parts.

## 2. EXPLANATION OF PARTS CATALOG FORMAT

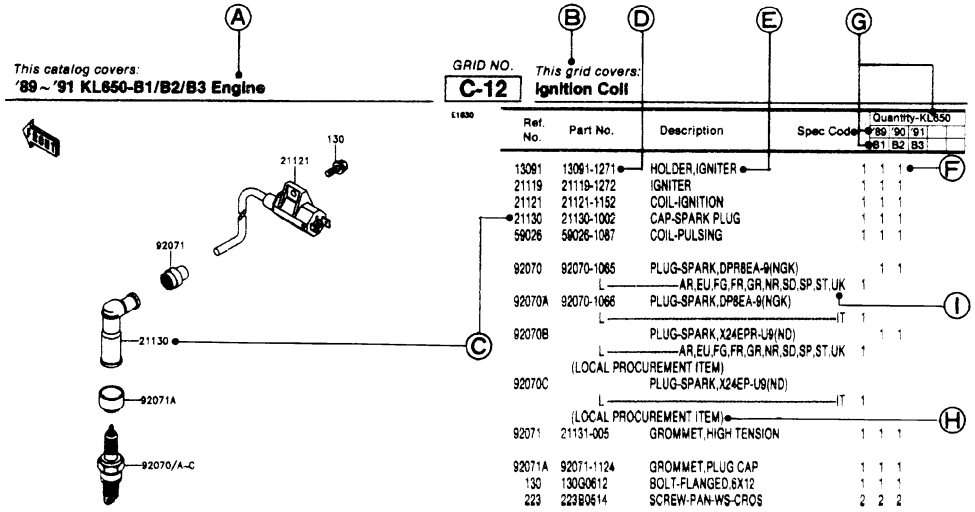


**A. Year & Model Title**
This title describes the year(s) and model(s) contained in this catalog.

**B. Part Group Title**
A representative name for the group of parts illustrated on this page.

**C. Referernce Number**
The reference number is listed on the illustration and parts list. It is the link between the illustration and the parts list.

**D. Part Number**
The number assigned to a part for the purpose of parts ordering.

1) Part Number (New Structure)
00000 – 0000 – 00 or 00000 – 0000 – 000

(Old Structure)
00000 – 000 – 00

Color Code
Production Number
Function Code

2) Standard Hardware Number
000 0 0000

Size Number
Material or Surface Treatment Code (Alphabet)
Item Number

**E. Description**
Describes the main function of the part and includes data such as size, number of teeth, color,etc.

**List of Abbreviations**

| | | | | | |
|---|---|---|---|---|---|
| (+) | Plus | HEX | Hexagonal | REF | Reference |
| (-) | Minus | ID = | Inside Diameter | RH | Right Hand |
| & | And | KPH | Killometers Per Hour | RPM | Revolutions Per Minute |
| 2ND | Second | L | Link | RR | Rear |
| 3RD | Third | L = | Length | STD | Standard |
| 4TH | Fourth | L/ | Less | T | Teeth |
| AR | As Required | LH | Left Hand | T = | Thickness |
| ASSY | Assembly | LWR | Lower | U/S | Under Size |
| CA | Cut Away | MM | Millimeter | UPP | Upper |
| CNT | Center | MPH | Miles Per Hour | V | Volt |
| COMP | Complete | NA | Not Available | W | Watt |
| D | Degree | O/S | Over Size | W/ | With |
| FR | Front | OD = | Outside Diameter | WD | With Decal |
| G | Gram | PR | Ply Rating | WOD | Without Decal |

**F. Quantity**
Specifies how many of a part are required at the indicated position on the illustration.

**G. Year & Model**
Indicates which parts are used for a specific vehicle year and model.

**H. Additional Information**
Additional Information is shown as follows:
1) (OPTION) Part is not installed as original equipment, but is available separately.
2) (RACING USE ONLY) Part is to be used for closed course racing only on this vehicle.
3) (OFF-ROAD USE ONLY) Part is for off-road use only this vehicle.
4) (LOCAL PROCUREMENT ITEM) Part is obtainable from a local source. No part number is listed.
5) Technical relationships between old part numbers and new part numbers are shown as follows:
INTERCHANGE - Old part or new part can be used.
SUBSTITUTE - New part replaces old part. Old part cannot be used in place of new part.
6) Mid-Year part number changes on a vehicle are noted by engine or frame number references.

| | |
|---|---|
| ( - KZ400DE001181) | Affected units are from beginning of model year production up to and including this engine number. |
| (KZ400D-008111 - ) | Affected units are from this frame number to the end of model year production. |
| (KZ400DE008181 - KZ400DE018888) | Affected units are in this engine number range. |

**I. Specification Code**
Identifies the specification of the vehicle for which the part applies. If no spec code is listed, that means the part is used for all specifications.

| Spec Code | Specification | '13 | '14 | '15 | '16 | |
|---|---|---|---|---|---|---|
| | | ADS | AEF | AFF | AGF | |
| FR | France | O | O | O | O | |
| UK | United Kingdom | O | O | O | O | |
| WV | Whole Vehicle Type Approval | O | O | O | O | |
| | | | | | | |
| | | | | | | |
| | | | | | | |
| | | | | | | |
| | | | | | | |
| | | | | | | |
| | | | | | | |
| | | | | | | |
| | | | | | | |
| | | | | | | |

# ZR800ADS

Left Side View

Right Side View

# ZR800AEF

Left Side View

Right Side View

# ZR800AFF

Left Side View

Right Side View

# ZR800AGF

Left Side View

Right Side View

# '13 ZR800ADS

O : Applicable ×: Not applicable

## Color: CANDY FLAT BLAZED GREEN (35K ) (1)

| Part No. | Description | Spec.Code | | | | | | | | | | | | |
|---|---|---|---|---|---|---|---|---|---|---|---|---|---|---|
| | | FR | UK | WV | | | | | | | | | | |
| 11065-0750-18R | CAP,F.S.BLACK | O | O | O | | | | | | | | | | |
| 11065-0781-10B | CAP,COMP.,RH,P.RED | O | O | O | | | | | | | | | | |
| 11065-0782-10B | CAP,COMP.,LH,P.RED | O | O | O | | | | | | | | | | |
| 14092-0962-45Q | COVER,PIVOT,LH,C.F.B.GREEN | O | O | O | | | | | | | | | | |
| 14092-0963-45Q | COVER,PIVOT,RH,C.F.B.GREEN | O | O | O | | | | | | | | | | |
| 14092-1093-18T | COVER,SUB FRAME,LH,F.S.BLACK | O | O | O | | | | | | | | | | |
| 14092-1094-18T | COVER,SUB FRAME,RH,F.S.BLACK | O | O | O | | | | | | | | | | |
| 32160-0678-18R | FRAME-COMP,F.S.BLACK | O | O | O | | | | | | | | | | |
| 32190-0619-18R | BRACKET-ENGINE,RR,LH,F.S.BLACK | O | O | O | | | | | | | | | | |
| 32190-0620-18R | BRACKET-ENGINE,RR,RH,F.S.BLACK | O | O | O | | | | | | | | | | |
| 32190-0635-18R | BRACKET-ENGINE,FR,LH,F.S.BLACK | O | O | O | | | | | | | | | | |
| 32190-0636-18R | BRACKET-ENGINE,FR,RH,F.S.BLACK | O | O | O | | | | | | | | | | |
| 33001-0604-18R | ARM-COMP-SWING,F.S.BLACK | O | O | O | | | | | | | | | | |
| 33040-0079-26M | ADJUSTER-CHAIN,OUTER,F.M.GRAY | O | O | O | | | | | | | | | | |
| 34024-0116-18R | STAND-SIDE,F.S.BLACK | O | O | O | | | | | | | | | | |
| 35004-0322-660 | FENDER-FRONT,M.S.BLACK | O | O | O | | | | | | | | | | |
| 35063-0863-18R | STAY,RR,LH,F.S.BLACK | O | O | O | | | | | | | | | | |
| 35063-0864-18R | STAY,RR,RH,F.S.BLACK | O | O | O | | | | | | | | | | |
| 36040-0139-660 | COVER-TAIL,M.S.BLACK | O | O | O | | | | | | | | | | |
| 41073-0593-QT | WHEEL-ASSY,RR,G.BLACK | O | O | O | | | | | | | | | | |
| 41073-0595-QT | WHEEL-ASSY,FR,G.BLACK | O | O | O | | | | | | | | | | |
| 41080-0577-5C | DISC,FR,HOUSING+DISC BLK/SIL | O | O | O | | | | | | | | | | |
| 43080-0050-DJ | CALIPER-SUB-ASSY,RR,BLACK | O | O | O | | | | | | | | | | |
| 43080-0130-DJ | CALIPER-SUB-ASSY,FR,LH,BLACK | O | O | O | | | | | | | | | | |
| 43080-0131-DJ | CALIPER-SUB-ASSY,FR,RH,BLACK | O | O | O | | | | | | | | | | |
| 44008-0062-499 | PIPE-FORK OUTER,A.BLACK | O | O | O | | | | | | | | | | |
| 44013-0195-18R | PIPE-FORK INNER,LH,F.S.BLACK | O | O | O | | | | | | | | | | |
| 44013-0196-18R | PIPE-FORK INNER,RH,F.S.BLACK | O | O | O | | | | | | | | | | |
| 44037-0066-26M | HOLDER-FORK UNDER,F.M.GRAY | O | O | O | | | | | | | | | | |
| 44039-0130-26M | HOLDER-FORK UPPER,F.M.GRAY | O | O | O | | | | | | | | | | |

# '13 ZR800ADS

O : Applicable ×: Not applicable

## Color: CANDY FLAT BLAZED GREEN (35K ) (2)

| Part No. | Description | Spec.Code | | | | | | | | | | | | |
|---|---|---|---|---|---|---|---|---|---|---|---|---|---|---|
| | | FR | UK | WV | | | | | | | | | | |
| 44071-0850-48C | DAMPER-ASSY,FORK,RH.BLACK | O | O | O | | | | | | | | | | |
| 44071-0895-48C | DAMPER-ASSY,FORK,LH.BLACK | O | O | O | | | | | | | | | | |
| 45014-0386-37K | SHOCK,SPG SIL+BODY BLK+CAP SIL | O | O | O | | | | | | | | | | |
| 46003-0583-18R | HANDLE,F.S.BLACK | O | O | O | | | | | | | | | | |
| 49125-0584-660 | SHROUD,LH,M.S.BLACK | O | O | O | | | | | | | | | | |
| 49125-0585-660 | SHROUD,RH,M.S.BLACK | O | O | O | | | | | | | | | | |
| 51026-0053-660 | COVER TANK,LH,M.S.BLACK | O | O | O | | | | | | | | | | |
| 51026-0054-660 | COVER TANK,RH,M.S.BLACK | O | O | O | | | | | | | | | | |
| 51088-5005-35K | TANK-COMP-FUEL,C.F.B.GREEN | O | O | O | | | | | | | | | | |
| 53003-0332-MA | LEATHER,FR SEAT,BLACK | O | O | O | | | | | | | | | | |
| 53003-0333-41C | LEATHER,RR SEAT,M.F.B.GREEN | O | O | O | | | | | | | | | | |
| 53065-0023-45Q | COVER SEAT,C.F.B.GREEN | O | O | O | | | | | | | | | | |
| 53066-0360-41D | SEAT,RR,LEATHER GRN+BAND GRN | O | O | O | | | | | | | | | | |
| 53066-0404-MA | SEAT-ASSY,FR,BLACK | O | O | O | | | | | | | | | | |
| 55028-0428-45Q | COWLING,UPP,CNT,C.F.B.GREEN | O | O | O | | | | | | | | | | |
| 55028-0431-660 | COWLING,UPP,SIDE,LH,M.S.BLACK | O | O | O | | | | | | | | | | |
| 55028-0432-660 | COWLING,UPP,SIDE,RH,M.S.BLACK | O | O | O | | | | | | | | | | |
| 55028-0433-45Q | COWLING,LWR,LH,C.F.B.GREEN | O | O | O | | | | | | | | | | |
| 55028-0434-45Q | COWLING,LWR,RH,C.F.B.GREEN | O | O | O | | | | | | | | | | |
| 99994-0410-45Q | KIT,SINGLE SEAT,C.F.B.GREEN | O | O | O | | | | | | | | | | |

# '13 ZR800ADS

O : Applicable ×: Not applicable

## Color: FLAT EBONY TYPE2 (45L ) (1)

| Part No. | Description | Spec.Code | | | | | | | | | | | | |
|---|---|---|---|---|---|---|---|---|---|---|---|---|---|---|
| | | FR | UK | WV | | | | | | | | | | |
| 11065-0750-18R | CAP,F.S.BLACK | O | O | O | | | | | | | | | | |
| 11065-0781-10B | CAP,COMP.,RH,P.RED | O | O | O | | | | | | | | | | |
| 11065-0782-10B | CAP,COMP.,LH,P.RED | O | O | O | | | | | | | | | | |
| 14092-0962-45L | COVER,PIVOT,LH,F.EBONY | O | O | O | | | | | | | | | | |
| 14092-0963-45L | COVER,PIVOT,RH,F.EBONY | O | O | O | | | | | | | | | | |
| 14092-1093-18T | COVER,SUB FRAME,LH,F.S.BLACK | O | O | O | | | | | | | | | | |
| 14092-1094-18T | COVER,SUB FRAME,RH,F.S.BLACK | O | O | O | | | | | | | | | | |
| 32160-0678-18R | FRAME-COMP,F.S.BLACK | O | O | O | | | | | | | | | | |
| 32190-0619-18R | BRACKET-ENGINE,RR,LH,F.S.BLACK | O | O | O | | | | | | | | | | |
| 32190-0620-18R | BRACKET-ENGINE,RR,RH,F.S.BLACK | O | O | O | | | | | | | | | | |
| 32190-0635-18R | BRACKET-ENGINE,FR,LH,F.S.BLACK | O | O | O | | | | | | | | | | |
| 32190-0636-18R | BRACKET-ENGINE,FR,RH,F.S.BLACK | O | O | O | | | | | | | | | | |
| 33001-0604-18R | ARM-COMP-SWING,F.S.BLACK | O | O | O | | | | | | | | | | |
| 33040-0079-26M | ADJUSTER-CHAIN,OUTER,F.M.GRAY | O | O | O | | | | | | | | | | |
| 34024-0116-18R | STAND-SIDE,F.S.BLACK | O | O | O | | | | | | | | | | |
| 35004-0322-660 | FENDER-FRONT,M.S.BLACK | O | O | O | | | | | | | | | | |
| 35063-0863-18R | STAY,RR,LH,F.S.BLACK | O | O | O | | | | | | | | | | |
| 35063-0864-18R | STAY,RR,RH,F.S.BLACK | O | O | O | | | | | | | | | | |
| 36040-0139-660 | COVER-TAIL,M.S.BLACK | O | O | O | | | | | | | | | | |
| 41073-0593-QT | WHEEL-ASSY,RR,G.BLACK | O | O | O | | | | | | | | | | |
| 41073-0595-QT | WHEEL-ASSY,FR,G.BLACK | O | O | O | | | | | | | | | | |
| 41080-0577-5C | DISC,FR,HOUSING+DISC BLK/SIL | O | O | O | | | | | | | | | | |
| 43080-0050-DJ | CALIPER-SUB-ASSY,RR,BLACK | O | O | O | | | | | | | | | | |
| 43080-0130-DJ | CALIPER-SUB-ASSY,FR,LH,BLACK | O | O | O | | | | | | | | | | |
| 43080-0131-DJ | CALIPER-SUB-ASSY,FR,RH,BLACK | O | O | O | | | | | | | | | | |
| 44008-0062-499 | PIPE-FORK OUTER,A.BLACK | O | O | O | | | | | | | | | | |
| 44013-0195-18R | PIPE-FORK INNER,LH,F.S.BLACK | O | O | O | | | | | | | | | | |
| 44013-0196-18R | PIPE-FORK INNER,RH,F.S.BLACK | O | O | O | | | | | | | | | | |
| 44037-0066-26M | HOLDER-FORK UNDER,F.M.GRAY | O | O | O | | | | | | | | | | |
| 44039-0130-26M | HOLDER-FORK UPPER,F.M.GRAY | O | O | O | | | | | | | | | | |

# '13 ZR800ADS

O : Applicable ×: Not applicable

## Color: FLAT EBONY TYPE2 (45L ) (2)

| Part No. | Description | Spec.Code | | | | | | | | | | | | |
|---|---|---|---|---|---|---|---|---|---|---|---|---|---|---|
| | | FR | UK | WV | | | | | | | | | | |
| 44071-0850-48C | DAMPER-ASSY,FORK,RH.BLACK | O | O | O | | | | | | | | | | |
| 44071-0895-48C | DAMPER-ASSY,FORK,LH.BLACK | O | O | O | | | | | | | | | | |
| 45014-0386-37K | SHOCK,SPG SIL+BODY BLK+CAP SIL | O | O | O | | | | | | | | | | |
| 46003-0583-18R | HANDLE,F.S.BLACK | O | O | O | | | | | | | | | | |
| 49125-0584-45L | SHROUD,LH,F.EBONY | O | O | O | | | | | | | | | | |
| 49125-0585-45L | SHROUD,RH,F.EBONY | O | O | O | | | | | | | | | | |
| 51026-0053-35L | COVER TANK,LH,F.EBONY | O | O | O | | | | | | | | | | |
| 51026-0054-35L | COVER TANK,RH,F.EBONY | O | O | O | | | | | | | | | | |
| 51088-5012-15Z | TANK-COMP-FUEL,M.S.BLACK | O | O | O | | | | | | | | | | |
| 53003-0332-MA | LEATHER,FR SEAT,BLACK | O | O | O | | | | | | | | | | |
| 53003-0333-MA | LEATHER,RR SEAT,BLACK | O | O | O | | | | | | | | | | |
| 53065-0023-45L | COVER SEAT,F.EBONY | O | O | O | | | | | | | | | | |
| 53066-0360-12Y | SEAT,RR,LEATHER BLK+BAND BLK | O | O | O | | | | | | | | | | |
| 53066-0404-MA | SEAT-ASSY,FR,BLACK | O | O | O | | | | | | | | | | |
| 55028-0428-660 | COWLING,UPP,CNT,M.S.BLACK | O | O | O | | | | | | | | | | |
| 55028-0431-35L | COWLING,UPP,SIDE,LH,F.EBONY | O | O | O | | | | | | | | | | |
| 55028-0432-35L | COWLING,UPP,SIDE,RH,F.EBONY | O | O | O | | | | | | | | | | |
| 55028-0433-45L | COWLING,LWR,LH,F.EBONY | O | O | O | | | | | | | | | | |
| 55028-0434-45L | COWLING,LWR,RH,F.EBONY | O | O | O | | | | | | | | | | |
| 99994-0410-45L | KIT,SINGLE SEAT,F.EBONY | O | O | O | | | | | | | | | | |

# '13 ZR800ADS

O : Applicable ×: Not applicable

## Color: PEARL STARDUST WHITE (15S ) (1)

| Part No. | Description | Spec.Code | | | | | | | | | | | | |
|---|---|---|---|---|---|---|---|---|---|---|---|---|---|---|
| | | FR | UK | WV | | | | | | | | | | |
| 11065-0750-18R | CAP,F.S.BLACK | O | O | O | | | | | | | | | | |
| 11065-0781-10B | CAP,COMP.,RH,P.RED | O | O | O | | | | | | | | | | |
| 11065-0782-10B | CAP,COMP.,LH,P.RED | O | O | O | | | | | | | | | | |
| 14092-0962-25Y | COVER,PIVOT,LH,P.S.WHITE | O | O | O | | | | | | | | | | |
| 14092-0963-25Y | COVER,PIVOT,RH,P.S.WHITE | O | O | O | | | | | | | | | | |
| 14092-1093-18T | COVER,SUB FRAME,LH,F.S.BLACK | O | O | O | | | | | | | | | | |
| 14092-1094-18T | COVER,SUB FRAME,RH,F.S.BLACK | O | O | O | | | | | | | | | | |
| 32160-0678-18R | FRAME-COMP,F.S.BLACK | O | O | O | | | | | | | | | | |
| 32190-0619-18R | BRACKET-ENGINE,RR,LH,F.S.BLACK | O | O | O | | | | | | | | | | |
| 32190-0620-18R | BRACKET-ENGINE,RR,RH,F.S.BLACK | O | O | O | | | | | | | | | | |
| 32190-0635-18R | BRACKET-ENGINE,FR,LH,F.S.BLACK | O | O | O | | | | | | | | | | |
| 32190-0636-18R | BRACKET-ENGINE,FR,RH,F.S.BLACK | O | O | O | | | | | | | | | | |
| 33001-0604-18R | ARM-COMP-SWING,F.S.BLACK | O | O | O | | | | | | | | | | |
| 33040-0079-26M | ADJUSTER-CHAIN,OUTER,F.M.GRAY | O | O | O | | | | | | | | | | |
| 34024-0116-18R | STAND-SIDE,F.S.BLACK | O | O | O | | | | | | | | | | |
| 35004-0322-25Y | FENDER-FRONT,P.S.WHITE | O | O | O | | | | | | | | | | |
| 35063-0863-18R | STAY,RR,LH,F.S.BLACK | O | O | O | | | | | | | | | | |
| 35063-0864-18R | STAY,RR,RH,F.S.BLACK | O | O | O | | | | | | | | | | |
| 36040-0139-25Y | COVER-TAIL,P.S.WHITE | O | O | O | | | | | | | | | | |
| 41073-0593-QT | WHEEL-ASSY,RR,G.BLACK | O | O | O | | | | | | | | | | |
| 41073-0595-QT | WHEEL-ASSY,FR,G.BLACK | O | O | O | | | | | | | | | | |
| 41080-0577-5C | DISC,FR,HOUSING+DISC BLK/SIL | O | O | O | | | | | | | | | | |
| 43080-0050-DJ | CALIPER-SUB-ASSY,RR,BLACK | O | O | O | | | | | | | | | | |
| 43080-0130-DJ | CALIPER-SUB-ASSY,FR,LH,BLACK | O | O | O | | | | | | | | | | |
| 43080-0131-DJ | CALIPER-SUB-ASSY,FR,RH,BLACK | O | O | O | | | | | | | | | | |
| 44008-0062-499 | PIPE-FORK OUTER,A.BLACK | O | O | O | | | | | | | | | | |
| 44013-0195-18R | PIPE-FORK INNER,LH,F.S.BLACK | O | O | O | | | | | | | | | | |
| 44013-0196-18R | PIPE-FORK INNER,RH,F.S.BLACK | O | O | O | | | | | | | | | | |
| 44037-0066-26M | HOLDER-FORK UNDER,F.M.GRAY | O | O | O | | | | | | | | | | |
| 44039-0130-26M | HOLDER-FORK UPPER,F.M.GRAY | O | O | O | | | | | | | | | | |

# '13 ZR800ADS

O : Applicable ×: Not applicable

## Color: PEARL STARDUST WHITE (15S ) (2)

| Part No. | Description | Spec.Code | | | | | | | | | | | | |
|---|---|---|---|---|---|---|---|---|---|---|---|---|---|---|
| | | FR | UK | WV | | | | | | | | | | |
| 44071-0850-48C | DAMPER-ASSY,FORK,RH.BLACK | O | O | O | | | | | | | | | | |
| 44071-0895-48C | DAMPER-ASSY,FORK,LH.BLACK | O | O | O | | | | | | | | | | |
| 45014-0386-37K | SHOCK,SPG SIL+BODY BLK+CAP SIL | O | O | O | | | | | | | | | | |
| 46003-0583-18R | HANDLE,F.S.BLACK | O | O | O | | | | | | | | | | |
| 49125-0584-660 | SHROUD,LH,M.S.BLACK | O | O | O | | | | | | | | | | |
| 49125-0585-660 | SHROUD,RH,M.S.BLACK | O | O | O | | | | | | | | | | |
| 51026-0053-660 | COVER TANK,LH,M.S.BLACK | O | O | O | | | | | | | | | | |
| 51026-0054-660 | COVER TANK,RH,M.S.BLACK | O | O | O | | | | | | | | | | |
| 51088-5004-15S | TANK-COMP-FUEL,P.S.WHITE | O | O | O | | | | | | | | | | |
| 53003-0332-MA | LEATHER,FR SEAT,BLACK | O | O | O | | | | | | | | | | |
| 53003-0333-MA | LEATHER,RR SEAT,BLACK | O | O | O | | | | | | | | | | |
| 53065-0023-25Y | COVER SEAT,P.S.WHITE | O | O | O | | | | | | | | | | |
| 53066-0360-12Y | SEAT,RR,LEATHER BLK+BAND BLK | O | O | O | | | | | | | | | | |
| 53066-0404-MA | SEAT-ASSY,FR,BLACK | O | O | O | | | | | | | | | | |
| 55028-0428-25Y | COWLING,UPP,CNT,P.S.WHITE | O | O | O | | | | | | | | | | |
| 55028-0431-660 | COWLING,UPP,SIDE,LH,M.S.BLACK | O | O | O | | | | | | | | | | |
| 55028-0432-660 | COWLING,UPP,SIDE,RH,M.S.BLACK | O | O | O | | | | | | | | | | |
| 55028-0433-25Y | COWLING,LWR,LH,P.S.WHITE | O | O | O | | | | | | | | | | |
| 55028-0434-25Y | COWLING,LWR,RH,P.S.WHITE | O | O | O | | | | | | | | | | |
| 99994-0410-25Y | KIT,SINGLE SEAT,P.S.WHITE | O | O | O | | | | | | | | | | |

# '14 ZR800AEF

O : Applicable ×: Not applicable

## Color: CANDY BURNT ORANGE (15T ) (1)

| Part No. | Description | Spec.Code FR | UK | WV | | | | | | | | | | |
|---|---|---|---|---|---|---|---|---|---|---|---|---|---|---|
| 11065-0750-18R | CAP,F.S.BLACK | O | O | O | | | | | | | | | | |
| 11065-0781-10B | CAP,COMP.,RH,P.RED | O | O | O | | | | | | | | | | |
| 11065-0782-10B | CAP,COMP.,LH,P.RED | O | O | O | | | | | | | | | | |
| 14092-0962-15T | COVER,PIVOT,LH,C.B.ORANGE | O | O | O | | | | | | | | | | |
| 14092-0963-15T | COVER,PIVOT,RH,C.B.ORANGE | O | O | O | | | | | | | | | | |
| 14092-1093-18T | COVER,SUB FRAME,LH,F.S.BLACK | O | O | O | | | | | | | | | | |
| 14092-1094-18T | COVER,SUB FRAME,RH,F.S.BLACK | O | O | O | | | | | | | | | | |
| 32160-0678-18R | FRAME-COMP,F.S.BLACK | O | O | O | | | | | | | | | | |
| 32190-0619-18R | BRACKET-ENGINE,RR,LH,F.S.BLACK | O | O | O | | | | | | | | | | |
| 32190-0620-18R | BRACKET-ENGINE,RR,RH,F.S.BLACK | O | O | O | | | | | | | | | | |
| 32190-0635-18R | BRACKET-ENGINE,FR,LH,F.S.BLACK | O | O | O | | | | | | | | | | |
| 32190-0636-18R | BRACKET-ENGINE,FR,RH,F.S.BLACK | O | O | O | | | | | | | | | | |
| 33001-0604-18R | ARM-COMP-SWING,F.S.BLACK | O | O | O | | | | | | | | | | |
| 33040-0079-26M | ADJUSTER-CHAIN,OUTER,F.M.GRAY | O | O | O | | | | | | | | | | |
| 34024-0116-18R | STAND-SIDE,F.S.BLACK | O | O | O | | | | | | | | | | |
| 35004-0322-739 | FENDER-FRONT,M.F.S.BLACK | O | O | O | | | | | | | | | | |
| 35063-0863-18R | STAY,RR,LH,F.S.BLACK | O | O | O | | | | | | | | | | |
| 35063-0864-18R | STAY,RR,RH,F.S.BLACK | O | O | O | | | | | | | | | | |
| 36040-0139-15T | COVER-TAIL,C.B.ORANGE | O | O | O | | | | | | | | | | |
| 41073-0593-QT | WHEEL-ASSY,RR,G.BLACK | O | O | O | | | | | | | | | | |
| 41073-0595-QT | WHEEL-ASSY,FR,G.BLACK | O | O | O | | | | | | | | | | |
| 41080-0577-5C | DISC,FR,HOUSING+DISC BLK/SIL | O | O | O | | | | | | | | | | |
| 43080-0050-DJ | CALIPER-SUB-ASSY,RR,BLACK | O | O | O | | | | | | | | | | |
| 43080-0130-DJ | CALIPER-SUB-ASSY,FR,LH,BLACK | O | O | O | | | | | | | | | | |
| 43080-0131-DJ | CALIPER-SUB-ASSY,FR,RH,BLACK | O | O | O | | | | | | | | | | |
| 44008-0062-499 | PIPE-FORK OUTER,A.BLACK | O | O | O | | | | | | | | | | |
| 44013-0195-18R | PIPE-FORK INNER,LH,F.S.BLACK | O | O | O | | | | | | | | | | |
| 44013-0196-18R | PIPE-FORK INNER,RH,F.S.BLACK | O | O | O | | | | | | | | | | |
| 44037-0066-26M | HOLDER-FORK UNDER,F.M.GRAY | O | O | O | | | | | | | | | | |
| 44039-0130-26M | HOLDER-FORK UPPER,F.M.GRAY | O | O | O | | | | | | | | | | |

# '14 ZR800AEF

O : Applicable ×: Not applicable

## Color: CANDY BURNT ORANGE (15T ) (2)

| Part No. | Description | Spec.Code | | | | | | | | | | | | |
|---|---|---|---|---|---|---|---|---|---|---|---|---|---|---|
| | | FR | UK | WV | | | | | | | | | | |
| 44071-0850-48C | DAMPER-ASSY,FORK,RH.BLACK | O | O | O | | | | | | | | | | |
| 44071-0895-48C | DAMPER-ASSY,FORK,LH.BLACK | O | O | O | | | | | | | | | | |
| 45014-0386-37N | SHOCK,SPG SIL+BODY BLK+CAP SIL | O | O | O | | | | | | | | | | |
| 46003-0583-18R | HANDLE,F.S.BLACK | O | O | O | | | | | | | | | | |
| 49125-0584-660 | SHROUD,LH,M.S.BLACK | O | O | O | | | | | | | | | | |
| 49125-0585-660 | SHROUD,RH,M.S.BLACK | O | O | O | | | | | | | | | | |
| 51026-0053-660 | COVER TANK,LH,M.S.BLACK | O | O | O | | | | | | | | | | |
| 51026-0054-660 | COVER TANK,RH,M.S.BLACK | O | O | O | | | | | | | | | | |
| 51088-5254-15T | TANK-COMP-FUEL,C.B.ORANGE | O | O | O | | | | | | | | | | |
| 53003-0332-MA | LEATHER,FR SEAT,BLACK | O | O | O | | | | | | | | | | |
| 53003-0333-MA | LEATHER,RR SEAT,BLACK | O | O | O | | | | | | | | | | |
| 53065-0023-15T | COVER SEAT,C.B.ORANGE | O | O | O | | | | | | | | | | |
| 53066-0360-12Y | SEAT,RR,LEATHER BLK+BAND BLK | O | O | O | | | | | | | | | | |
| 53066-0404-MA | SEAT-ASSY,FR,BLACK | O | O | O | | | | | | | | | | |
| 55028-0428-15T | COWLING,UPP,CNT,C.B.ORANGE | O | O | O | | | | | | | | | | |
| 55028-0431-660 | COWLING,UPP,SIDE,LH,M.S.BLACK | O | O | O | | | | | | | | | | |
| 55028-0432-660 | COWLING,UPP,SIDE,RH,M.S.BLACK | O | O | O | | | | | | | | | | |
| 55028-0433-15T | COWLING,LWR,LH,C.B.ORANGE | O | O | O | | | | | | | | | | |
| 55028-0434-15T | COWLING,LWR,RH,C.B.ORANGE | O | O | O | | | | | | | | | | |
| 99994-0410-15T | KIT,SINGLE SEAT,C.B.ORANGE | O | O | O | | | | | | | | | | |

# '14 ZR800AEF

O : Applicable ×: Not applicable

## Color: CANDY FLAT BLAZED GREEN (35K ) (1)

| Part No. | Description | Spec.Code | | | | | | | | | | | | |
|---|---|---|---|---|---|---|---|---|---|---|---|---|---|---|
| | | FR | UK | WV | | | | | | | | | | |
| 11065-0750-18R | CAP,F.S.BLACK | O | O | O | | | | | | | | | | |
| 11065-0781-10B | CAP,COMP.,RH,P.RED | O | O | O | | | | | | | | | | |
| 11065-0782-10B | CAP,COMP.,LH,P.RED | O | O | O | | | | | | | | | | |
| 14092-0962-35K | COVER,PIVOT,LH,C.F.B.GREEN | O | O | O | | | | | | | | | | |
| 14092-0963-35K | COVER,PIVOT,RH,C.F.B.GREEN | O | O | O | | | | | | | | | | |
| 14092-1093-18T | COVER,SUB FRAME,LH,F.S.BLACK | O | O | O | | | | | | | | | | |
| 14092-1094-18T | COVER,SUB FRAME,RH,F.S.BLACK | O | O | O | | | | | | | | | | |
| 32160-0678-18R | FRAME-COMP,F.S.BLACK | O | O | O | | | | | | | | | | |
| 32190-0619-18R | BRACKET-ENGINE,RR,LH,F.S.BLACK | O | O | O | | | | | | | | | | |
| 32190-0620-18R | BRACKET-ENGINE,RR,RH,F.S.BLACK | O | O | O | | | | | | | | | | |
| 32190-0635-18R | BRACKET-ENGINE,FR,LH,F.S.BLACK | O | O | O | | | | | | | | | | |
| 32190-0636-18R | BRACKET-ENGINE,FR,RH,F.S.BLACK | O | O | O | | | | | | | | | | |
| 33001-0604-18R | ARM-COMP-SWING,F.S.BLACK | O | O | O | | | | | | | | | | |
| 33040-0079-26M | ADJUSTER-CHAIN,OUTER,F.M.GRAY | O | O | O | | | | | | | | | | |
| 34024-0116-18R | STAND-SIDE,F.S.BLACK | O | O | O | | | | | | | | | | |
| 35004-0322-660 | FENDER-FRONT,M.S.BLACK | O | O | O | | | | | | | | | | |
| 35063-0863-18R | STAY,RR,LH,F.S.BLACK | O | O | O | | | | | | | | | | |
| 35063-0864-18R | STAY,RR,RH,F.S.BLACK | O | O | O | | | | | | | | | | |
| 36040-0139-660 | COVER-TAIL,M.S.BLACK | O | O | O | | | | | | | | | | |
| 41073-0593-QT | WHEEL-ASSY,RR,G.BLACK | O | O | O | | | | | | | | | | |
| 41073-0595-QT | WHEEL-ASSY,FR,G.BLACK | O | O | O | | | | | | | | | | |
| 41080-0577-5C | DISC,FR,HOUSING+DISC BLK/SIL | O | O | O | | | | | | | | | | |
| 43080-0050-DJ | CALIPER-SUB-ASSY,RR,BLACK | O | O | O | | | | | | | | | | |
| 43080-0130-DJ | CALIPER-SUB-ASSY,FR,LH,BLACK | O | O | O | | | | | | | | | | |
| 43080-0131-DJ | CALIPER-SUB-ASSY,FR,RH,BLACK | O | O | O | | | | | | | | | | |
| 44008-0062-499 | PIPE-FORK OUTER,A.BLACK | O | O | O | | | | | | | | | | |
| 44013-0195-18R | PIPE-FORK INNER,LH,F.S.BLACK | O | O | O | | | | | | | | | | |
| 44013-0196-18R | PIPE-FORK INNER,RH,F.S.BLACK | O | O | O | | | | | | | | | | |
| 44037-0066-26M | HOLDER-FORK UNDER,F.M.GRAY | O | O | O | | | | | | | | | | |
| 44039-0130-26M | HOLDER-FORK UPPER,F.M.GRAY | O | O | O | | | | | | | | | | |

# '14 ZR800AEF

O : Applicable ×: Not applicable

## Color: CANDY FLAT BLAZED GREEN (35K ) (2)

| Part No. | Description | Spec.Code | | | | | | | | | | | | |
|---|---|---|---|---|---|---|---|---|---|---|---|---|---|---|
| | | FR | UK | WV | | | | | | | | | | |
| 44071-0850-48C | DAMPER-ASSY,FORK,RH.BLACK | O | O | O | | | | | | | | | | |
| 44071-0895-48C | DAMPER-ASSY,FORK,LH.BLACK | O | O | O | | | | | | | | | | |
| 45014-0386-37N | SHOCK,SPG SIL+BODY BLK+CAP SIL | O | O | O | | | | | | | | | | |
| 46003-0583-18R | HANDLE,F.S.BLACK | O | O | O | | | | | | | | | | |
| 49125-0584-660 | SHROUD,LH,M.S.BLACK | O | O | O | | | | | | | | | | |
| 49125-0585-660 | SHROUD,RH,M.S.BLACK | O | O | O | | | | | | | | | | |
| 51026-0053-660 | COVER TANK,LH,M.S.BLACK | O | O | O | | | | | | | | | | |
| 51026-0054-660 | COVER TANK,RH,M.S.BLACK | O | O | O | | | | | | | | | | |
| 51088-5259-35K | TANK-COMP-FUEL,C.F.B.GREEN | O | O | O | | | | | | | | | | |
| 53003-0332-MA | LEATHER,FR SEAT,BLACK | O | O | O | | | | | | | | | | |
| 53003-0333-41C | LEATHER,RR SEAT,M.F.B.GREEN | O | O | O | | | | | | | | | | |
| 53065-0023-35K | COVER SEAT,C.F.B.GREEN | O | O | O | | | | | | | | | | |
| 53066-0360-41D | SEAT,RR,LEATHER GRN+BAND GRN | O | O | O | | | | | | | | | | |
| 53066-0404-MA | SEAT-ASSY,FR,BLACK | O | O | O | | | | | | | | | | |
| 55028-0428-35K | COWLING,UPP,CNT,C.F.B.GREEN | O | O | O | | | | | | | | | | |
| 55028-0431-660 | COWLING,UPP,SIDE,LH,M.S.BLACK | O | O | O | | | | | | | | | | |
| 55028-0432-660 | COWLING,UPP,SIDE,RH,M.S.BLACK | O | O | O | | | | | | | | | | |
| 55028-0433-35K | COWLING,LWR,LH,C.F.B.GREEN | O | O | O | | | | | | | | | | |
| 55028-0434-35K | COWLING,LWR,RH,C.F.B.GREEN | O | O | O | | | | | | | | | | |
| 99994-0410-35K | KIT,SINGLE SEAT,C.F.B.GREEN | O | O | O | | | | | | | | | | |

# '14 ZR800AEF

O : Applicable ×: Not applicable

## Color: METALLIC SPARK BLACK (660 ) (1)

| Part No. | Description | Spec.Code FR | UK | WV | | | | | | | | | | |
|---|---|---|---|---|---|---|---|---|---|---|---|---|---|---|
| 11065-0750-18R | CAP,F.S.BLACK | O | O | O | | | | | | | | | | |
| 11065-0781-10B | CAP,COMP.,RH,P.RED | O | O | O | | | | | | | | | | |
| 11065-0782-10B | CAP,COMP.,LH,P.RED | O | O | O | | | | | | | | | | |
| 14092-0962-660 | COVER,PIVOT,LH,M.S.BLACK | O | O | O | | | | | | | | | | |
| 14092-0963-660 | COVER,PIVOT,RH,M.S.BLACK | O | O | O | | | | | | | | | | |
| 14092-1093-18T | COVER,SUB FRAME,LH,F.S.BLACK | O | O | O | | | | | | | | | | |
| 14092-1094-18T | COVER,SUB FRAME,RH,F.S.BLACK | O | O | O | | | | | | | | | | |
| 32160-0678-18R | FRAME-COMP,F.S.BLACK | O | O | O | | | | | | | | | | |
| 32190-0619-18R | BRACKET-ENGINE,RR,LH,F.S.BLACK | O | O | O | | | | | | | | | | |
| 32190-0620-18R | BRACKET-ENGINE,RR,RH,F.S.BLACK | O | O | O | | | | | | | | | | |
| 32190-0635-18R | BRACKET-ENGINE,FR,LH,F.S.BLACK | O | O | O | | | | | | | | | | |
| 32190-0636-18R | BRACKET-ENGINE,FR,RH,F.S.BLACK | O | O | O | | | | | | | | | | |
| 33001-0604-18R | ARM-COMP-SWING,F.S.BLACK | O | O | O | | | | | | | | | | |
| 33040-0079-26M | ADJUSTER-CHAIN,OUTER,F.M.GRAY | O | O | O | | | | | | | | | | |
| 34024-0116-18R | STAND-SIDE,F.S.BLACK | O | O | O | | | | | | | | | | |
| 35004-0322-739 | FENDER-FRONT,M.F.S.BLACK | O | O | O | | | | | | | | | | |
| 35063-0863-18R | STAY,RR,LH,F.S.BLACK | O | O | O | | | | | | | | | | |
| 35063-0864-18R | STAY,RR,RH,F.S.BLACK | O | O | O | | | | | | | | | | |
| 36040-0139-660 | COVER-TAIL,M.S.BLACK | O | O | O | | | | | | | | | | |
| 41073-0593-QT | WHEEL-ASSY,RR,G.BLACK | O | O | O | | | | | | | | | | |
| 41073-0595-QT | WHEEL-ASSY,FR,G.BLACK | O | O | O | | | | | | | | | | |
| 41080-0577-5C | DISC,FR,HOUSING+DISC BLK/SIL | O | O | O | | | | | | | | | | |
| 43080-0050-DJ | CALIPER-SUB-ASSY,RR,BLACK | O | O | O | | | | | | | | | | |
| 43080-0130-DJ | CALIPER-SUB-ASSY,FR,LH,BLACK | O | O | O | | | | | | | | | | |
| 43080-0131-DJ | CALIPER-SUB-ASSY,FR,RH,BLACK | O | O | O | | | | | | | | | | |
| 44008-0062-499 | PIPE-FORK OUTER,A.BLACK | O | O | O | | | | | | | | | | |
| 44013-0195-18R | PIPE-FORK INNER,LH,F.S.BLACK | O | O | O | | | | | | | | | | |
| 44013-0196-18R | PIPE-FORK INNER,RH,F.S.BLACK | O | O | O | | | | | | | | | | |
| 44037-0066-26M | HOLDER-FORK UNDER,F.M.GRAY | O | O | O | | | | | | | | | | |
| 44039-0130-26M | HOLDER-FORK UPPER,F.M.GRAY | O | O | O | | | | | | | | | | |

# '14 ZR800AEF

O : Applicable ×: Not applicable

## Color: METALLIC SPARK BLACK (660 ) (2)

| Part No. | Description | Spec.Code FR | UK | WV | | | | | | | | | | |
|---|---|---|---|---|---|---|---|---|---|---|---|---|---|---|
| 44071-0850-48C | DAMPER-ASSY,FORK,RH.BLACK | O | O | O | | | | | | | | | | |
| 44071-0895-48C | DAMPER-ASSY,FORK,LH.BLACK | O | O | O | | | | | | | | | | |
| 45014-0386-37N | SHOCK,SPG SIL+BODY BLK+CAP SIL | O | O | O | | | | | | | | | | |
| 46003-0583-18R | HANDLE,F.S.BLACK | O | O | O | | | | | | | | | | |
| 49125-0584-739 | SHROUD,LH,M.F.S.BLACK | O | O | O | | | | | | | | | | |
| 49125-0585-739 | SHROUD,RH,M.F.S.BLACK | O | O | O | | | | | | | | | | |
| 51026-0053-739 | COVER TANK,LH,M.F.S.BLACK | O | O | O | | | | | | | | | | |
| 51026-0054-739 | COVER TANK,RH,M.F.S.BLACK | O | O | O | | | | | | | | | | |
| 51088-5256-660 | TANK-COMP-FUEL,M.S.BLACK | O | O | O | | | | | | | | | | |
| 53003-0332-MA | LEATHER,FR SEAT,BLACK | O | O | O | | | | | | | | | | |
| 53003-0333-MA | LEATHER,RR SEAT,BLACK | O | O | O | | | | | | | | | | |
| 53065-0023-739 | COVER SEAT,M.F.S.BLACK | O | O | O | | | | | | | | | | |
| 53066-0360-12Y | SEAT,RR,LEATHER BLK+BAND BLK | O | O | O | | | | | | | | | | |
| 53066-0404-MA | SEAT-ASSY,FR,BLACK | O | O | O | | | | | | | | | | |
| 55028-0428-660 | COWLING,UPP,CNT,M.S.BLACK | O | O | O | | | | | | | | | | |
| 55028-0431-739 | COWLING,UPP,SIDE,LH,M.F.S.BLK | O | O | O | | | | | | | | | | |
| 55028-0432-739 | COWLING,UPP,SIDE,RH,M.F.S.BLK | O | O | O | | | | | | | | | | |
| 55028-0433-660 | COWLING,LWR,LH,M.S.BLACK | O | O | O | | | | | | | | | | |
| 55028-0434-660 | COWLING,LWR,RH,M.S.BLACK | O | O | O | | | | | | | | | | |
| 99994-0410-739 | KIT,SINGLE SEAT,M.F.S.BLACK | O | O | O | | | | | | | | | | |

# '15 ZR800AFF

O : Applicable ×: Not applicable

## Color: CANDY FLAT BLAZED GREEN (35K ) (1)

| Part No. | Description | Spec.Code | | | | | | | | | | | | |
|---|---|---|---|---|---|---|---|---|---|---|---|---|---|---|
| | | FR | UK | WV | | | | | | | | | | |
| 11065-0750-18R | CAP,F.S.BLACK | O | O | O | | | | | | | | | | |
| 11065-0781-48W | CAP,COMP.,RH,G.B.GREEN | O | O | O | | | | | | | | | | |
| 11065-0782-48W | CAP,COMP.,LH,G.B.GREEN | O | O | O | | | | | | | | | | |
| 14092-0962-660 | COVER,PIVOT,LH,M.S.BLACK | O | O | O | | | | | | | | | | |
| 14092-0963-660 | COVER,PIVOT,RH,M.S.BLACK | O | O | O | | | | | | | | | | |
| 14092-1093-18T | COVER,SUB FRAME,LH,F.S.BLACK | O | O | O | | | | | | | | | | |
| 14092-1094-18T | COVER,SUB FRAME,RH,F.S.BLACK | O | O | O | | | | | | | | | | |
| 32160-0678-18R | FRAME-COMP,F.S.BLACK | O | O | O | | | | | | | | | | |
| 32190-0620-18R | BRACKET-ENGINE,RR,RH,F.S.BLACK | O | O | O | | | | | | | | | | |
| 32190-0635-18R | BRACKET-ENGINE,FR,LH,F.S.BLACK | O | O | O | | | | | | | | | | |
| 32190-0636-18R | BRACKET-ENGINE,FR,RH,F.S.BLACK | O | O | O | | | | | | | | | | |
| 32190-0683-18R | BRACKET-ENGINE,RR,LH,F.S.BLACK | O | O | O | | | | | | | | | | |
| 33001-0604-18R | ARM-COMP-SWING,F.S.BLACK | O | O | O | | | | | | | | | | |
| 33040-0079-26M | ADJUSTER-CHAIN,OUTER,F.M.GRAY | O | O | O | | | | | | | | | | |
| 34024-0116-18R | STAND-SIDE,F.S.BLACK | O | O | O | | | | | | | | | | |
| 35004-0322-35K | FENDER-FRONT,C.F.B.GREEN | O | O | O | | | | | | | | | | |
| 35063-0863-18R | STAY,RR,LH,F.S.BLACK | O | O | O | | | | | | | | | | |
| 35063-0864-18R | STAY,RR,RH,F.S.BLACK | O | O | O | | | | | | | | | | |
| 36040-0139-35K | COVER-TAIL,C.F.B.GREEN | O | O | O | | | | | | | | | | |
| 41073-0593-QT | WHEEL-ASSY,RR,G.BLACK | O | O | O | | | | | | | | | | |
| 41073-0595-QT | WHEEL-ASSY,FR,G.BLACK | O | O | O | | | | | | | | | | |
| 41080-0577-5C | DISC,FR,HOUSING+DISC BLK/SIL | O | O | O | | | | | | | | | | |
| 43080-0050-DJ | CALIPER-SUB-ASSY,RR,BLACK | O | O | O | | | | | | | | | | |
| 43080-0130-DJ | CALIPER-SUB-ASSY,FR,LH,BLACK | O | O | O | | | | | | | | | | |
| 43080-0131-DJ | CALIPER-SUB-ASSY,FR,RH,BLACK | O | O | O | | | | | | | | | | |
| 44008-0062-499 | PIPE-FORK OUTER,A.BLACK | O | O | O | | | | | | | | | | |
| 44013-0195-18R | PIPE-FORK INNER,LH,F.S.BLACK | O | O | O | | | | | | | | | | |
| 44013-0196-18R | PIPE-FORK INNER,RH,F.S.BLACK | O | O | O | | | | | | | | | | |
| 44037-0066-26M | HOLDER-FORK UNDER,F.M.GRAY | O | O | O | | | | | | | | | | |
| 44039-0130-26M | HOLDER-FORK UPPER,F.M.GRAY | O | O | O | | | | | | | | | | |

# '15 ZR800AFF

O : Applicable ×: Not applicable

## Color: CANDY FLAT BLAZED GREEN (35K ) (2)

| Part No. | Description | Spec.Code | | | | | | | | | | | | |
|---|---|---|---|---|---|---|---|---|---|---|---|---|---|---|
| | | FR | UK | WV | | | | | | | | | | |
| 44071-1103-50M | DAMPER-ASSY,FORK,LH,BLACK | O | O | O | | | | | | | | | | |
| 44071-1104-50M | DAMPER-ASSY,FORK,RH,BLACK | O | O | O | | | | | | | | | | |
| 45014-0386-37Z | SHOCKABSORBER,SPG GRN+BODY BLK | O | O | O | | | | | | | | | | |
| 46003-0583-18R | HANDLE,F.S.BLACK | O | O | O | | | | | | | | | | |
| 49125-0584-660 | SHROUD,LH,M.S.BLACK | O | O | O | | | | | | | | | | |
| 49125-0585-660 | SHROUD,RH,M.S.BLACK | O | O | O | | | | | | | | | | |
| 51026-0053-660 | COVER TANK,LH,M.S.BLACK | O | O | O | | | | | | | | | | |
| 51026-0054-660 | COVER TANK,RH,M.S.BLACK | O | O | O | | | | | | | | | | |
| 51089-5180-35K | TANK-COMP-FUEL,C.F.B.GREEN | O | O | O | | | | | | | | | | |
| 53003-0332-MA | LEATHER,FR SEAT,BLACK | O | O | O | | | | | | | | | | |
| 53003-0333-MA | LEATHER,RR SEAT,BLACK | O | O | O | | | | | | | | | | |
| 53003-0423-MA | LEATHER,RR SEAT,BLACK | O | O | O | | | | | | | | | | |
| 53065-0023-660 | COVER SEAT,M.S.BLACK | O | O | O | | | | | | | | | | |
| 53066-0466-MA | SEAT-ASSY,FR,BLACK | O | O | O | | | | | | | | | | |
| 53066-0467-12Y | SEAT,RR,LEATHER BLK+BAND BLK | O | O | O | | | | | | | | | | |
| 55028-0428-35K | COWLING,UPP,CNT,C.F.B.GREEN | O | O | O | | | | | | | | | | |
| 55028-0431-660 | COWLING,UPP,SIDE,LH,M.S.BLACK | O | O | O | | | | | | | | | | |
| 55028-0432-660 | COWLING,UPP,SIDE,RH,M.S.BLACK | O | O | O | | | | | | | | | | |
| 55028-0433-35K | COWLING,LWR,LH,C.F.B.GREEN | O | O | O | | | | | | | | | | |
| 55028-0434-35K | COWLING,LWR,RH,C.F.B.GREEN | O | O | O | | | | | | | | | | |
| 99994-0410-660 | KIT,SINGLE SEAT,M.S.BLACK | O | O | O | | | | | | | | | | |

# '15 ZR800AFF

O : Applicable ×: Not applicable

## Color: METALLIC SPARK BLACK (660 ) (1)

| Part No. | Description | Spec.Code FR | UK | WV | | | | | | | | | | |
|---|---|---|---|---|---|---|---|---|---|---|---|---|---|---|
| 11065-0750-18R | CAP,F.S.BLACK | O | O | O | | | | | | | | | | |
| 11065-0781-48W | CAP,COMP.,RH,G.B.GREEN | O | O | O | | | | | | | | | | |
| 11065-0782-48W | CAP,COMP.,LH,G.B.GREEN | O | O | O | | | | | | | | | | |
| 14092-0962-45L | COVER,PIVOT,LH,F.EBONY | O | O | O | | | | | | | | | | |
| 14092-0963-45L | COVER,PIVOT,RH,F.EBONY | O | O | O | | | | | | | | | | |
| 14092-1093-18T | COVER,SUB FRAME,LH,F.S.BLACK | O | O | O | | | | | | | | | | |
| 14092-1094-18T | COVER,SUB FRAME,RH,F.S.BLACK | O | O | O | | | | | | | | | | |
| 32160-0678-18R | FRAME-COMP,F.S.BLACK | O | O | O | | | | | | | | | | |
| 32190-0620-18R | BRACKET-ENGINE,RR,RH,F.S.BLACK | O | O | O | | | | | | | | | | |
| 32190-0635-18R | BRACKET-ENGINE,FR,LH,F.S.BLACK | O | O | O | | | | | | | | | | |
| 32190-0636-18R | BRACKET-ENGINE,FR,RH,F.S.BLACK | O | O | O | | | | | | | | | | |
| 32190-0683-18R | BRACKET-ENGINE,RR,LH,F.S.BLACK | O | O | O | | | | | | | | | | |
| 33001-0604-18R | ARM-COMP-SWING,F.S.BLACK | O | O | O | | | | | | | | | | |
| 33040-0079-26M | ADJUSTER-CHAIN,OUTER,F.M.GRAY | O | O | O | | | | | | | | | | |
| 34024-0116-18R | STAND-SIDE,F.S.BLACK | O | O | O | | | | | | | | | | |
| 35004-0322-45L | FENDER-FRONT,F.EBONY | O | O | O | | | | | | | | | | |
| 35063-0863-18R | STAY,RR,LH,F.S.BLACK | O | O | O | | | | | | | | | | |
| 35063-0864-18R | STAY,RR,RH,F.S.BLACK | O | O | O | | | | | | | | | | |
| 36040-0139-45L | COVER-TAIL,F.EBONY | O | O | O | | | | | | | | | | |
| 41073-0593-QT | WHEEL-ASSY,RR,G.BLACK | O | O | O | | | | | | | | | | |
| 41073-0595-QT | WHEEL-ASSY,FR,G.BLACK | O | O | O | | | | | | | | | | |
| 41080-0577-5C | DISC,FR,HOUSING+DISC BLK/SIL | O | O | O | | | | | | | | | | |
| 43080-0050-DJ | CALIPER-SUB-ASSY,RR,BLACK | O | O | O | | | | | | | | | | |
| 43080-0130-DJ | CALIPER-SUB-ASSY,FR,LH,BLACK | O | O | O | | | | | | | | | | |
| 43080-0131-DJ | CALIPER-SUB-ASSY,FR,RH,BLACK | O | O | O | | | | | | | | | | |
| 44008-0062-499 | PIPE-FORK OUTER,A.BLACK | O | O | O | | | | | | | | | | |
| 44013-0195-18R | PIPE-FORK INNER,LH,F.S.BLACK | O | O | O | | | | | | | | | | |
| 44013-0196-18R | PIPE-FORK INNER,RH,F.S.BLACK | O | O | O | | | | | | | | | | |
| 44037-0066-26M | HOLDER-FORK UNDER,F.M.GRAY | O | O | O | | | | | | | | | | |
| 44039-0130-26M | HOLDER-FORK UPPER,F.M.GRAY | O | O | O | | | | | | | | | | |

# '15 ZR800AFF

O : Applicable ×: Not applicable

## Color: METALLIC SPARK BLACK (660 ) (2)

| Part No. | Description | Spec.Code FR | UK | WV | | | | | | | | | | |
|---|---|---|---|---|---|---|---|---|---|---|---|---|---|---|
| 44071-1103-50M | DAMPER-ASSY,FORK,LH,BLACK | O | O | O | | | | | | | | | | |
| 44071-1104-50M | DAMPER-ASSY,FORK,RH,BLACK | O | O | O | | | | | | | | | | |
| 45014-0386-37Z | SHOCKABSORBER,SPG GRN+BODY BLK | O | O | O | | | | | | | | | | |
| 46003-0583-18R | HANDLE,F.S.BLACK | O | O | O | | | | | | | | | | |
| 49125-0584-45L | SHROUD,LH,F.EBONY | O | O | O | | | | | | | | | | |
| 49125-0585-45L | SHROUD,RH,F.EBONY | O | O | O | | | | | | | | | | |
| 51026-0053-45L | COVER TANK,LH,F.EBONY | O | O | O | | | | | | | | | | |
| 51026-0054-45L | COVER TANK,RH,F.EBONY | O | O | O | | | | | | | | | | |
| 51089-5179-660 | TANK-COMP-FUEL,M.S.BLACK | O | O | O | | | | | | | | | | |
| 53003-0332-MA | LEATHER,FR SEAT,BLACK | O | O | O | | | | | | | | | | |
| 53003-0333-MA | LEATHER,RR SEAT,BLACK | O | O | O | | | | | | | | | | |
| 53003-0423-MA | LEATHER,RR SEAT,BLACK | O | O | O | | | | | | | | | | |
| 53065-0023-660 | COVER SEAT,M.S.BLACK | O | O | O | | | | | | | | | | |
| 53066-0466-MA | SEAT-ASSY,FR,BLACK | O | O | O | | | | | | | | | | |
| 53066-0467-12Y | SEAT,RR,LEATHER BLK+BAND BLK | O | O | O | | | | | | | | | | |
| 55028-0428-660 | COWLING,UPP,CNT,M.S.BLACK | O | O | O | | | | | | | | | | |
| 55028-0431-45L | COWLING,UPP,SIDE,LH,F.EBONY | O | O | O | | | | | | | | | | |
| 55028-0432-45L | COWLING,UPP,SIDE,RH,F.EBONY | O | O | O | | | | | | | | | | |
| 55028-0433-45L | COWLING,LWR,LH,F.EBONY | O | O | O | | | | | | | | | | |
| 55028-0434-45L | COWLING,LWR,RH,F.EBONY | O | O | O | | | | | | | | | | |
| 99994-0410-660 | KIT,SINGLE SEAT,M.S.BLACK | O | O | O | | | | | | | | | | |

# '15 ZR800AFF

O : Applicable ×: Not applicable

## Color: PEARL STARDUST WHITE (25Y ) (1)

| Part No. | Description | Spec.Code | | | | | | | | | | | | |
|---|---|---|---|---|---|---|---|---|---|---|---|---|---|---|
| | | FR | UK | WV | | | | | | | | | | |
| 11065-0750-18R | CAP,F.S.BLACK | O | O | O | | | | | | | | | | |
| 11065-0781-48W | CAP,COMP.,RH,G.B.GREEN | O | O | O | | | | | | | | | | |
| 11065-0782-48W | CAP,COMP.,LH,G.B.GREEN | O | O | O | | | | | | | | | | |
| 14092-0962-25Y | COVER,PIVOT,LH,P.S.WHITE | O | O | O | | | | | | | | | | |
| 14092-0963-25Y | COVER,PIVOT,RH,P.S.WHITE | O | O | O | | | | | | | | | | |
| 14092-1093-18T | COVER,SUB FRAME,LH,F.S.BLACK | O | O | O | | | | | | | | | | |
| 14092-1094-18T | COVER,SUB FRAME,RH,F.S.BLACK | O | O | O | | | | | | | | | | |
| 32160-0678-18R | FRAME-COMP,F.S.BLACK | O | O | O | | | | | | | | | | |
| 32190-0620-18R | BRACKET-ENGINE,RR,RH,F.S.BLACK | O | O | O | | | | | | | | | | |
| 32190-0635-18R | BRACKET-ENGINE,FR,LH,F.S.BLACK | O | O | O | | | | | | | | | | |
| 32190-0636-18R | BRACKET-ENGINE,FR,RH,F.S.BLACK | O | O | O | | | | | | | | | | |
| 32190-0683-18R | BRACKET-ENGINE,RR,LH,F.S.BLACK | O | O | O | | | | | | | | | | |
| 33001-0604-18R | ARM-COMP-SWING,F.S.BLACK | O | O | O | | | | | | | | | | |
| 33040-0079-26M | ADJUSTER-CHAIN,OUTER,F.M.GRAY | O | O | O | | | | | | | | | | |
| 34024-0116-18R | STAND-SIDE,F.S.BLACK | O | O | O | | | | | | | | | | |
| 35004-0322-25Y | FENDER-FRONT,P.S.WHITE | O | O | O | | | | | | | | | | |
| 35063-0863-18R | STAY,RR,LH,F.S.BLACK | O | O | O | | | | | | | | | | |
| 35063-0864-18R | STAY,RR,RH,F.S.BLACK | O | O | O | | | | | | | | | | |
| 36040-0139-25Y | COVER-TAIL,P.S.WHITE | O | O | O | | | | | | | | | | |
| 41073-0593-QT | WHEEL-ASSY,RR,G.BLACK | O | O | O | | | | | | | | | | |
| 41073-0595-QT | WHEEL-ASSY,FR,G.BLACK | O | O | O | | | | | | | | | | |
| 41080-0577-5C | DISC,FR,HOUSING+DISC BLK/SIL | O | O | O | | | | | | | | | | |
| 43080-0050-DJ | CALIPER-SUB-ASSY,RR,BLACK | O | O | O | | | | | | | | | | |
| 43080-0130-DJ | CALIPER-SUB-ASSY,FR,LH,BLACK | O | O | O | | | | | | | | | | |
| 43080-0131-DJ | CALIPER-SUB-ASSY,FR,RH,BLACK | O | O | O | | | | | | | | | | |
| 44008-0062-499 | PIPE-FORK OUTER,A.BLACK | O | O | O | | | | | | | | | | |
| 44013-0195-18R | PIPE-FORK INNER,LH,F.S.BLACK | O | O | O | | | | | | | | | | |
| 44013-0196-18R | PIPE-FORK INNER,RH,F.S.BLACK | O | O | O | | | | | | | | | | |
| 44037-0066-26M | HOLDER-FORK UNDER,F.M.GRAY | O | O | O | | | | | | | | | | |
| 44039-0130-26M | HOLDER-FORK UPPER,F.M.GRAY | O | O | O | | | | | | | | | | |

# '15 ZR800AFF

O : Applicable ×: Not applicable

## Color: PEARL STARDUST WHITE (25Y ) (2)

| Part No. | Description | Spec.Code | | | | | | | | | | | | |
|---|---|---|---|---|---|---|---|---|---|---|---|---|---|---|
| | | FR | UK | WV | | | | | | | | | | |
| 44071-1103-50M | DAMPER-ASSY,FORK,LH,BLACK | O | O | O | | | | | | | | | | |
| 44071-1104-50M | DAMPER-ASSY,FORK,RH,BLACK | O | O | O | | | | | | | | | | |
| 45014-0386-37Z | SHOCKABSORBER,SPG GRN+BODY BLK | O | O | O | | | | | | | | | | |
| 46003-0583-18R | HANDLE,F.S.BLACK | O | O | O | | | | | | | | | | |
| 49125-0584-25Y | SHROUD,LH,P.S.WHITE | O | O | O | | | | | | | | | | |
| 49125-0585-25Y | SHROUD,RH,P.S.WHITE | O | O | O | | | | | | | | | | |
| 51026-0053-25Y | COVER TANK,LH,P.S.WHITE | O | O | O | | | | | | | | | | |
| 51026-0054-25Y | COVER TANK,RH,P.S.WHITE | O | O | O | | | | | | | | | | |
| 51089-5187-35B | TANK-COMP-FUEL,M.F.R.GRAYSTONE | O | O | O | | | | | | | | | | |
| 53003-0332-MA | LEATHER,FR SEAT,BLACK | O | O | O | | | | | | | | | | |
| 53003-0333-MA | LEATHER,RR SEAT,BLACK | O | O | O | | | | | | | | | | |
| 53003-0423-MA | LEATHER,RR SEAT,BLACK | O | O | O | | | | | | | | | | |
| 53065-0023-660 | COVER SEAT,M.S.BLACK | O | O | O | | | | | | | | | | |
| 53066-0466-MA | SEAT-ASSY,FR,BLACK | O | O | O | | | | | | | | | | |
| 53066-0467-12Y | SEAT,RR,LEATHER BLK+BAND BLK | O | O | O | | | | | | | | | | |
| 55028-0428-35B | COWLING,UPP,CNT,M.F.R.GRAY | O | O | O | | | | | | | | | | |
| 55028-0431-25Y | COWLING,UPP,SIDE,LH,P.S.WHITE | O | O | O | | | | | | | | | | |
| 55028-0432-25Y | COWLING,UPP,SIDE,RH,P.S.WHITE | O | O | O | | | | | | | | | | |
| 55028-0433-25Y | COWLING,LWR,LH,P.S.WHITE | O | O | O | | | | | | | | | | |
| 55028-0434-25Y | COWLING,LWR,RH,P.S.WHITE | O | O | O | | | | | | | | | | |
| 99994-0410-660 | KIT,SINGLE SEAT,M.S.BLACK | O | O | O | | | | | | | | | | |

# '16 ZR800AGF

O : Applicable ×: Not applicable

## Color: CANDY CRIMSON RED (53R ) (1)

| Part No. | Description | Spec.Code | | | | | | | | | | | | |
|---|---|---|---|---|---|---|---|---|---|---|---|---|---|---|
| | | FR | UK | WV | | | | | | | | | | |
| 11065-0750-18R | CAP,F.S.BLACK | O | O | O | | | | | | | | | | |
| 11065-0781-56N | CAP,COMP,RH,D.RED | O | O | O | | | | | | | | | | |
| 11065-0782-56N | CAP,COMP,LH,D.RED | O | O | O | | | | | | | | | | |
| 14092-0962-660 | COVER,PIVOT,LH,M.S.BLACK | O | O | O | | | | | | | | | | |
| 14092-0963-660 | COVER,PIVOT,RH,M.S.BLACK | O | O | O | | | | | | | | | | |
| 14092-1093-18T | COVER,SUB FRAME,LH,F.S.BLACK | O | O | O | | | | | | | | | | |
| 14092-1094-18T | COVER,SUB FRAME,RH,F.S.BLACK | O | O | O | | | | | | | | | | |
| 32160-0678-18R | FRAME-COMP,F.S.BLACK | O | O | O | | | | | | | | | | |
| 32190-0620-18R | BRACKET-ENGINE,RR,RH,F.S.BLACK | O | O | O | | | | | | | | | | |
| 32190-0635-18R | BRACKET-ENGINE,FR,LH,F.S.BLACK | O | O | O | | | | | | | | | | |
| 32190-0636-18R | BRACKET-ENGINE,FR,RH,F.S.BLACK | O | O | O | | | | | | | | | | |
| 32190-0683-18R | BRACKET-ENGINE,RR,LH,F.S.BLACK | O | O | O | | | | | | | | | | |
| 33001-0604-18R | ARM-COMP-SWING,F.S.BLACK | O | O | O | | | | | | | | | | |
| 33040-0079-26M | ADJUSTER-CHAIN,OUTER,F.M.GRAY | O | O | O | | | | | | | | | | |
| 34024-0116-18R | STAND-SIDE,F.S.BLACK | O | O | O | | | | | | | | | | |
| 35004-0322-660 | FENDER-FRONT,M.S.BLACK | O | O | O | | | | | | | | | | |
| 35063-0863-18R | STAY,RR,LH,F.S.BLACK | O | O | O | | | | | | | | | | |
| 35063-0864-18R | STAY,RR,RH,F.S.BLACK | O | O | O | | | | | | | | | | |
| 36040-0139-660 | COVER-TAIL,M.S.BLACK | O | O | O | | | | | | | | | | |
| 41073-0593-QT | WHEEL-ASSY,RR,G.BLACK | O | O | O | | | | | | | | | | |
| 41073-0595-QT | WHEEL-ASSY,FR,G.BLACK | O | O | O | | | | | | | | | | |
| 41080-0577-5C | DISC,FR,HOUSING+DISC BLK/SIL | O | O | O | | | | | | | | | | |
| 43080-0050-DJ | CALIPER-SUB-ASSY,RR,BLACK | O | O | O | | | | | | | | | | |
| 43080-0130-DJ | CALIPER-SUB-ASSY,FR,LH,BLACK | O | O | O | | | | | | | | | | |
| 43080-0131-DJ | CALIPER-SUB-ASSY,FR,RH,BLACK | O | O | O | | | | | | | | | | |
| 44008-0062-56N | PIPE-FORK OUTER,D.RED | O | O | O | | | | | | | | | | |
| 44013-0195-18R | PIPE-FORK INNER,LH,F.S.BLACK | O | O | O | | | | | | | | | | |
| 44013-0196-18R | PIPE-FORK INNER,RH,F.S.BLACK | O | O | O | | | | | | | | | | |
| 44037-0066-26M | HOLDER-FORK UNDER,F.M.GRAY | O | O | O | | | | | | | | | | |
| 44039-0130-26M | HOLDER-FORK UPPER,F.M.GRAY | O | O | O | | | | | | | | | | |

# '16 ZR800AGF

O : Applicable ×: Not applicable

## Color: CANDY CRIMSON RED (53R ) (2)

| Part No. | Description | Spec.Code | | | | | | | | | | | | |
|---|---|---|---|---|---|---|---|---|---|---|---|---|---|---|
| | | FR | UK | WV | | | | | | | | | | |
| 44071-1103-56R | DAMPER-ASSY,FORK,LH,D.RED | O | O | O | | | | | | | | | | |
| 44071-1104-56R | DAMPER-ASSY,FORK,RH,D.RED | O | O | O | | | | | | | | | | |
| 45014-0386-52E | SHOCKABSORBER,BLACK | O | O | O | | | | | | | | | | |
| 46003-0583-18R | HANDLE,F.S.BLACK | O | O | O | | | | | | | | | | |
| 49125-0584-660 | SHROUD,LH,M.S.BLACK | O | O | O | | | | | | | | | | |
| 49125-0585-660 | SHROUD,RH,M.S.BLACK | O | O | O | | | | | | | | | | |
| 51001-0782-53R | TANK-COMP-FUEL,C.C.RED | O | O | O | | | | | | | | | | |
| 51026-0053-660 | COVER TANK,LH,M.S.BLACK | O | O | O | | | | | | | | | | |
| 51026-0054-660 | COVER TANK,RH,M.S.BLACK | O | O | O | | | | | | | | | | |
| 53003-0332-MA | LEATHER,FR SEAT,BLACK | O | O | O | | | | | | | | | | |
| 53003-0423-55F | LEATHER,RR SEAT,C.C.RED | O | O | O | | | | | | | | | | |
| 53065-0023-660 | COVER SEAT,M.S.BLACK | O | O | O | | | | | | | | | | |
| 53066-0466-MA | SEAT-ASSY,FR,BLACK | O | O | O | | | | | | | | | | |
| 53066-0467-55K | SEAT-ASSY,RR,C.C.RED | O | O | O | | | | | | | | | | |
| 55028-0428-739 | COWLING,UPP,CNT,M.F.S.BLACK | O | O | O | | | | | | | | | | |
| 55028-0431-660 | COWLING,UPP,SIDE,LH,M.S.BLACK | O | O | O | | | | | | | | | | |
| 55028-0432-660 | COWLING,UPP,SIDE,RH,M.S.BLACK | O | O | O | | | | | | | | | | |
| 55028-0433-45W | COWLING,LWR,LH,M.G.GRAY | O | O | O | | | | | | | | | | |
| 55028-0434-45W | COWLING,LWR,RH,M.G.GRAY | O | O | O | | | | | | | | | | |
| 99994-0410-660 | KIT,SINGLE SEAT,M.S.BLACK | O | O | O | | | | | | | | | | |

# '16 ZR800AGF

O : Applicable ×: Not applicable

## Color: FLAT EBONY TYPE2 (45L ) (1)

| Part No. | Description | Spec.Code FR | UK | WV | | | | | | | | | | |
|---|---|---|---|---|---|---|---|---|---|---|---|---|---|---|
| 11065-0750-18R | CAP,F.S.BLACK | O | O | O | | | | | | | | | | |
| 11065-0781-50Y | CAP,COMP,RH,G.B.GREEN | O | O | O | | | | | | | | | | |
| 11065-0782-50Y | CAP,COMP,LH,G.B.GREEN | O | O | O | | | | | | | | | | |
| 14092-0962-45L | COVER,PIVOT,LH,F.EBONY | O | O | O | | | | | | | | | | |
| 14092-0963-45L | COVER,PIVOT,RH,F.EBONY | O | O | O | | | | | | | | | | |
| 14092-1093-18T | COVER,SUB FRAME,LH,F.S.BLACK | O | O | O | | | | | | | | | | |
| 14092-1094-18T | COVER,SUB FRAME,RH,F.S.BLACK | O | O | O | | | | | | | | | | |
| 32160-0678-18R | FRAME-COMP,F.S.BLACK | O | O | O | | | | | | | | | | |
| 32190-0620-18R | BRACKET-ENGINE,RR,RH,F.S.BLACK | O | O | O | | | | | | | | | | |
| 32190-0635-18R | BRACKET-ENGINE,FR,LH,F.S.BLACK | O | O | O | | | | | | | | | | |
| 32190-0636-18R | BRACKET-ENGINE,FR,RH,F.S.BLACK | O | O | O | | | | | | | | | | |
| 32190-0683-18R | BRACKET-ENGINE,RR,LH,F.S.BLACK | O | O | O | | | | | | | | | | |
| 33001-0604-18R | ARM-COMP-SWING,F.S.BLACK | O | O | O | | | | | | | | | | |
| 33040-0079-26M | ADJUSTER-CHAIN,OUTER,F.M.GRAY | O | O | O | | | | | | | | | | |
| 34024-0116-18R | STAND-SIDE,F.S.BLACK | O | O | O | | | | | | | | | | |
| 35004-0322-660 | FENDER-FRONT,M.S.BLACK | O | O | O | | | | | | | | | | |
| 35063-0863-18R | STAY,RR,LH,F.S.BLACK | O | O | O | | | | | | | | | | |
| 35063-0864-18R | STAY,RR,RH,F.S.BLACK | O | O | O | | | | | | | | | | |
| 36040-0139-660 | COVER-TAIL,M.S.BLACK | O | O | O | | | | | | | | | | |
| 41073-0593-QT | WHEEL-ASSY,RR,G.BLACK | O | O | O | | | | | | | | | | |
| 41073-0595-QT | WHEEL-ASSY,FR,G.BLACK | O | O | O | | | | | | | | | | |
| 41080-0577-5C | DISC,FR,HOUSING+DISC BLK/SIL | O | O | O | | | | | | | | | | |
| 43080-0050-DJ | CALIPER-SUB-ASSY,RR,BLACK | O | O | O | | | | | | | | | | |
| 43080-0130-DJ | CALIPER-SUB-ASSY,FR,LH,BLACK | O | O | O | | | | | | | | | | |
| 43080-0131-DJ | CALIPER-SUB-ASSY,FR,RH,BLACK | O | O | O | | | | | | | | | | |
| 44008-0062-499 | PIPE-FORK OUTER,A.BLACK | O | O | O | | | | | | | | | | |
| 44013-0195-18R | PIPE-FORK INNER,LH,F.S.BLACK | O | O | O | | | | | | | | | | |
| 44013-0196-18R | PIPE-FORK INNER,RH,F.S.BLACK | O | O | O | | | | | | | | | | |
| 44037-0066-26M | HOLDER-FORK UNDER,F.M.GRAY | O | O | O | | | | | | | | | | |
| 44039-0130-26M | HOLDER-FORK UPPER,F.M.GRAY | O | O | O | | | | | | | | | | |

# '16 ZR800AGF

O : Applicable ×: Not applicable

## Color: FLAT EBONY TYPE2 (45L ) (2)

| Part No. | Description | Spec.Code | | | | | | | | | | | | |
|---|---|---|---|---|---|---|---|---|---|---|---|---|---|---|
| | | FR | UK | WV | | | | | | | | | | |
| 44071-1103-56Q | DAMPER-ASSY,FORK,LH,BLACK | O | O | O | | | | | | | | | | |
| 44071-1104-56Q | DAMPER-ASSY,FORK,RH,BLACK | O | O | O | | | | | | | | | | |
| 45014-0386-37Z | SHOCKABSORBER,SPG GRN+BODY BLK | O | O | O | | | | | | | | | | |
| 46003-0583-18R | HANDLE,F.S.BLACK | O | O | O | | | | | | | | | | |
| 49125-0584-45L | SHROUD,LH,F.EBONY | O | O | O | | | | | | | | | | |
| 49125-0585-45L | SHROUD,RH,F.EBONY | O | O | O | | | | | | | | | | |
| 51001-0782-45L | TANK-COMP-FUEL,F.EBONY | O | O | O | | | | | | | | | | |
| 51026-0053-660 | COVER TANK,LH,M.S.BLACK | O | O | O | | | | | | | | | | |
| 51026-0054-660 | COVER TANK,RH,M.S.BLACK | O | O | O | | | | | | | | | | |
| 53003-0332-MA | LEATHER,FR SEAT,BLACK | O | O | O | | | | | | | | | | |
| 53003-0333-MA | LEATHER,RR SEAT,BLACK | O | O | O | | | | | | | | | | |
| 53003-0423-MA | LEATHER,RR SEAT,BLACK | O | O | O | | | | | | | | | | |
| 53065-0023-660 | COVER SEAT,M.S.BLACK | O | O | O | | | | | | | | | | |
| 53066-0466-MA | SEAT-ASSY,FR,BLACK | O | O | O | | | | | | | | | | |
| 53066-0467-12Y | SEAT,RR,LEATHER BLK+BAND BLK | O | O | O | | | | | | | | | | |
| 55028-0428-45L | COWLING,UPP,CNT,F.EBONY | O | O | O | | | | | | | | | | |
| 55028-0431-660 | COWLING,UPP,SIDE,LH,M.S.BLACK | O | O | O | | | | | | | | | | |
| 55028-0432-660 | COWLING,UPP,SIDE,RH,M.S.BLACK | O | O | O | | | | | | | | | | |
| 55028-0433-45L | COWLING,LWR,LH,F.EBONY | O | O | O | | | | | | | | | | |
| 55028-0434-45L | COWLING,LWR,RH,F.EBONY | O | O | O | | | | | | | | | | |
| 99994-0410-660 | KIT,SINGLE SEAT,M.S.BLACK | O | O | O | | | | | | | | | | |

# '16 ZR800AGF

O : Applicable ×: Not applicable

## Color: PEARL STARDUST WHITE (25Y ) (1)

| Part No. | Description | Spec.Code | | | | | | | | | | | | |
|---|---|---|---|---|---|---|---|---|---|---|---|---|---|---|
| | | FR | UK | WV | | | | | | | | | | |
| 11065-0750-18R | CAP,F.S.BLACK | O | O | O | | | | | | | | | | |
| 11065-0781-50Y | CAP,COMP,RH,G.B.GREEN | O | O | O | | | | | | | | | | |
| 11065-0782-50Y | CAP,COMP,LH,G.B.GREEN | O | O | O | | | | | | | | | | |
| 14092-0962-660 | COVER,PIVOT,LH,M.S.BLACK | O | O | O | | | | | | | | | | |
| 14092-0963-660 | COVER,PIVOT,RH,M.S.BLACK | O | O | O | | | | | | | | | | |
| 14092-1093-18T | COVER,SUB FRAME,LH,F.S.BLACK | O | O | O | | | | | | | | | | |
| 14092-1094-18T | COVER,SUB FRAME,RH,F.S.BLACK | O | O | O | | | | | | | | | | |
| 32160-0678-18R | FRAME-COMP,F.S.BLACK | O | O | O | | | | | | | | | | |
| 32190-0620-18R | BRACKET-ENGINE,RR,RH,F.S.BLACK | O | O | O | | | | | | | | | | |
| 32190-0635-18R | BRACKET-ENGINE,FR,LH,F.S.BLACK | O | O | O | | | | | | | | | | |
| 32190-0636-18R | BRACKET-ENGINE,FR,RH,F.S.BLACK | O | O | O | | | | | | | | | | |
| 32190-0683-18R | BRACKET-ENGINE,RR,LH,F.S.BLACK | O | O | O | | | | | | | | | | |
| 33001-0604-18R | ARM-COMP-SWING,F.S.BLACK | O | O | O | | | | | | | | | | |
| 33040-0079-26M | ADJUSTER-CHAIN,OUTER,F.M.GRAY | O | O | O | | | | | | | | | | |
| 34024-0116-18R | STAND-SIDE,F.S.BLACK | O | O | O | | | | | | | | | | |
| 35004-0322-660 | FENDER-FRONT,M.S.BLACK | O | O | O | | | | | | | | | | |
| 35063-0863-18R | STAY,RR,LH,F.S.BLACK | O | O | O | | | | | | | | | | |
| 35063-0864-18R | STAY,RR,RH,F.S.BLACK | O | O | O | | | | | | | | | | |
| 36040-0139-660 | COVER-TAIL,M.S.BLACK | O | O | O | | | | | | | | | | |
| 41073-0593-QT | WHEEL-ASSY,RR,G.BLACK | O | O | O | | | | | | | | | | |
| 41073-0595-QT | WHEEL-ASSY,FR,G.BLACK | O | O | O | | | | | | | | | | |
| 41080-0577-5C | DISC,FR,HOUSING+DISC BLK/SIL | O | O | O | | | | | | | | | | |
| 43080-0050-DJ | CALIPER-SUB-ASSY,RR,BLACK | O | O | O | | | | | | | | | | |
| 43080-0130-DJ | CALIPER-SUB-ASSY,FR,LH,BLACK | O | O | O | | | | | | | | | | |
| 43080-0131-DJ | CALIPER-SUB-ASSY,FR,RH,BLACK | O | O | O | | | | | | | | | | |
| 44008-0062-499 | PIPE-FORK OUTER,A.BLACK | O | O | O | | | | | | | | | | |
| 44013-0195-18R | PIPE-FORK INNER,LH,F.S.BLACK | O | O | O | | | | | | | | | | |
| 44013-0196-18R | PIPE-FORK INNER,RH,F.S.BLACK | O | O | O | | | | | | | | | | |
| 44037-0066-26M | HOLDER-FORK UNDER,F.M.GRAY | O | O | O | | | | | | | | | | |
| 44039-0130-26M | HOLDER-FORK UPPER,F.M.GRAY | O | O | O | | | | | | | | | | |

# '16 ZR800AGF

O : Applicable ×: Not applicable

## Color: PEARL STARDUST WHITE (25Y ) (2)

| Part No. | Description | Spec.Code | | | | | | | | | | | | |
|---|---|---|---|---|---|---|---|---|---|---|---|---|---|---|
| | | FR | UK | WV | | | | | | | | | | |
| 44071-1103-56Q | DAMPER-ASSY,FORK,LH,BLACK | O | O | O | | | | | | | | | | |
| 44071-1104-56Q | DAMPER-ASSY,FORK,RH,BLACK | O | O | O | | | | | | | | | | |
| 45014-0386-37Z | SHOCKABSORBER,SPG GRN+BODY BLK | O | O | O | | | | | | | | | | |
| 46003-0583-18R | HANDLE,F.S.BLACK | O | O | O | | | | | | | | | | |
| 49125-0584-660 | SHROUD,LH,M.S.BLACK | O | O | O | | | | | | | | | | |
| 49125-0585-660 | SHROUD,RH,M.S.BLACK | O | O | O | | | | | | | | | | |
| 51001-0782-25Y | TANK-COMP-FUEL,P.S.WHITE | O | O | O | | | | | | | | | | |
| 51026-0053-660 | COVER TANK,LH,M.S.BLACK | O | O | O | | | | | | | | | | |
| 51026-0054-660 | COVER TANK,RH,M.S.BLACK | O | O | O | | | | | | | | | | |
| 53003-0332-MA | LEATHER,FR SEAT,BLACK | O | O | O | | | | | | | | | | |
| 53003-0333-41C | LEATHER,RR SEAT,M.F.B.GREEN | O | O | O | | | | | | | | | | |
| 53003-0423-41C | LEATHER,RR SEAT,M.F.B.GREEN | O | O | O | | | | | | | | | | |
| 53065-0023-660 | COVER SEAT,M.S.BLACK | O | O | O | | | | | | | | | | |
| 53066-0466-MA | SEAT-ASSY,FR,BLACK | O | O | O | | | | | | | | | | |
| 53066-0467-41D | SEAT,RR,LEATHER GRN+BAND GRN | O | O | O | | | | | | | | | | |
| 55028-0428-25Y | COWLING,UPP,CNT,P.S.WHITE | O | O | O | | | | | | | | | | |
| 55028-0431-660 | COWLING,UPP,SIDE,LH,M.S.BLACK | O | O | O | | | | | | | | | | |
| 55028-0432-660 | COWLING,UPP,SIDE,RH,M.S.BLACK | O | O | O | | | | | | | | | | |
| 55028-0433-45W | COWLING,LWR,LH,M.G.GRAY | O | O | O | | | | | | | | | | |
| 55028-0434-45W | COWLING,LWR,RH,M.G.GRAY | O | O | O | | | | | | | | | | |
| 99994-0410-660 | KIT,SINGLE SEAT,M.S.BLACK | O | O | O | | | | | | | | | | |

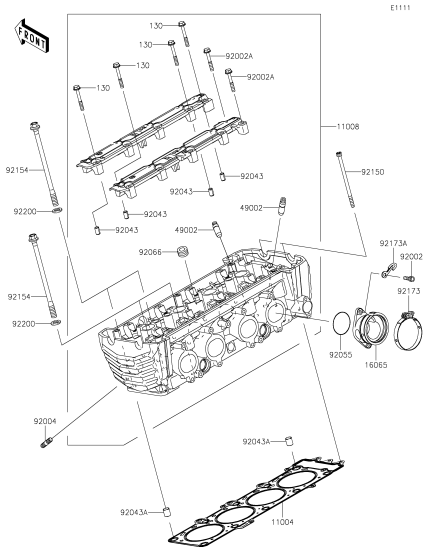


**B-3** Cylinder Head

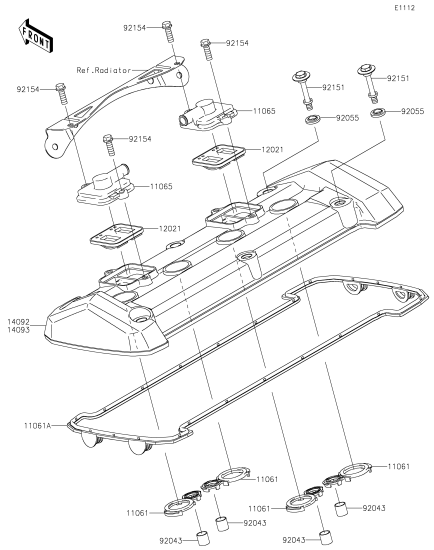


**B-4** Cylinder Head Cover

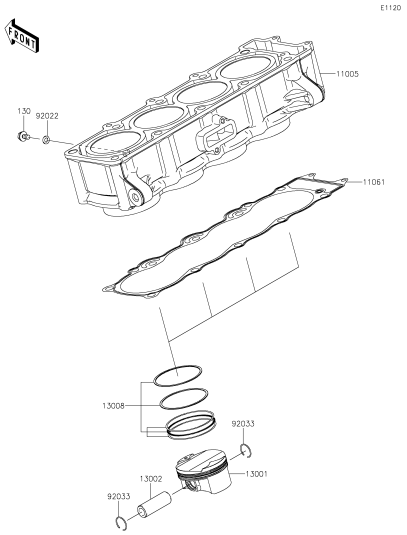


**B-5** Cylinder/Piston(s)

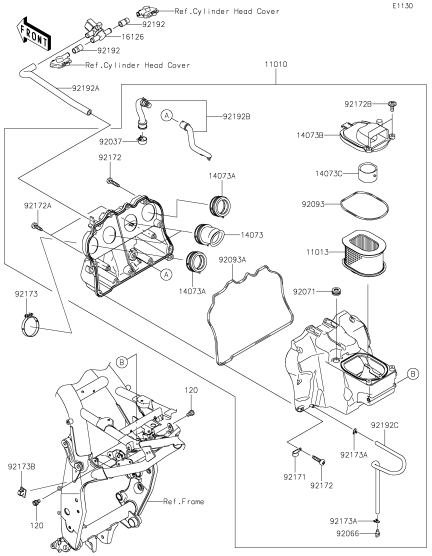


**B-6** Air Cleaner

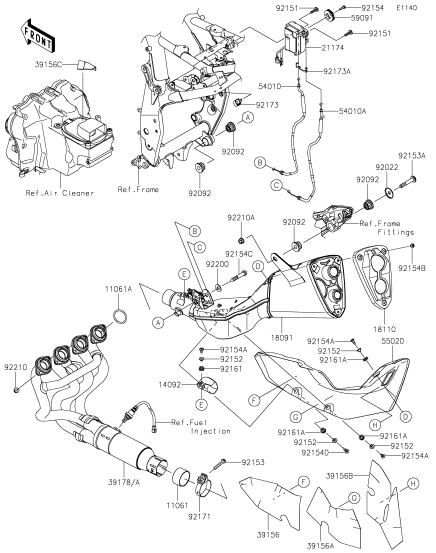


**B-7** Muffler(s)

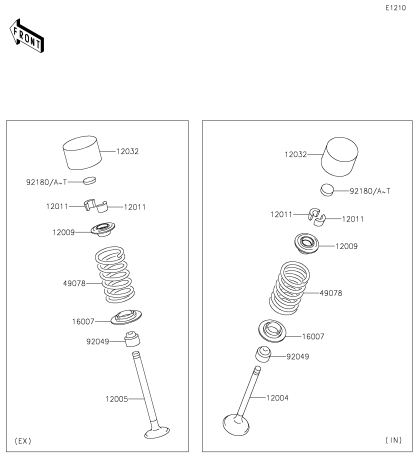


**B-8** Valve(s)

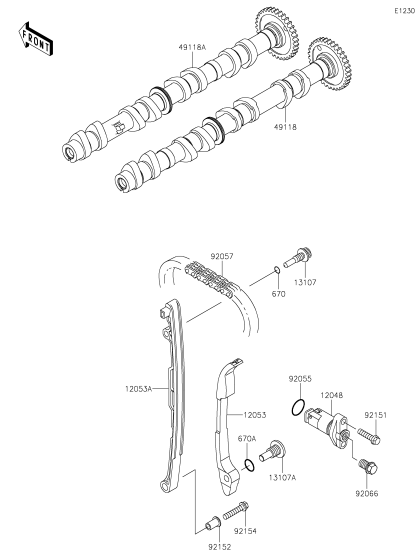


**B-9** **Camshaft(s)/Tensioner**

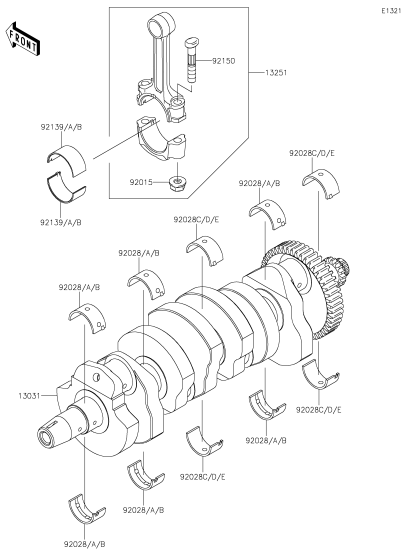


**B-10** **Crankshaft**

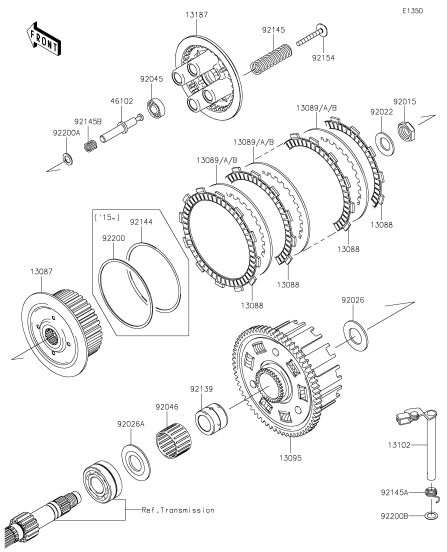


**B-11** **Clutch**

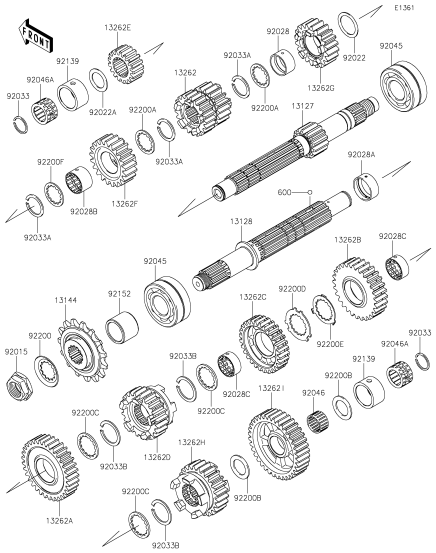


**B-12** **Transmission**

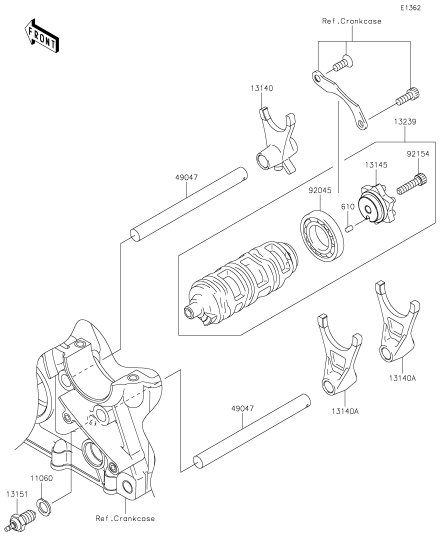


**B-13** **Gear Change Drum/Shift Fork(s)**

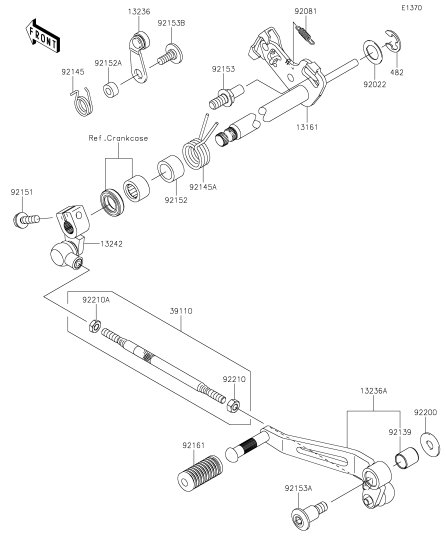


**B-14** **Gear Change Mechanism**

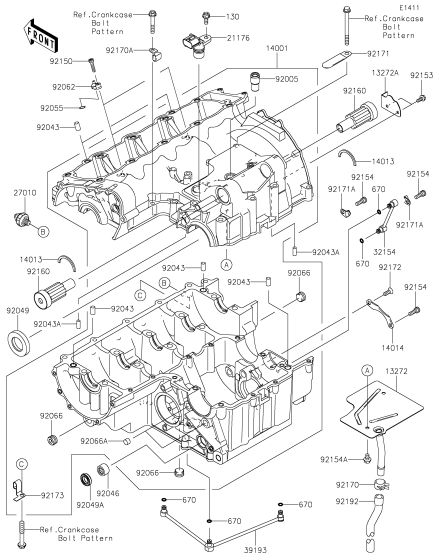


**C-3** **Crankcase**

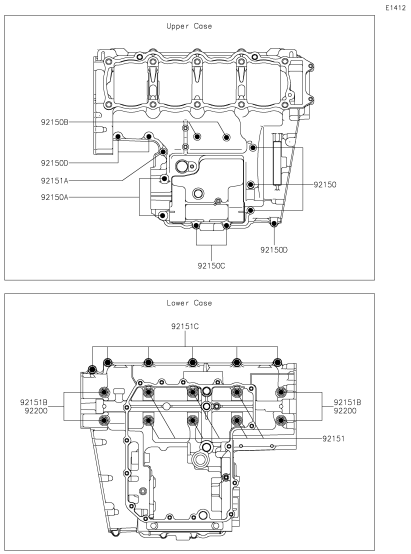


**C-4** **Crankcase Bolt Pattern**

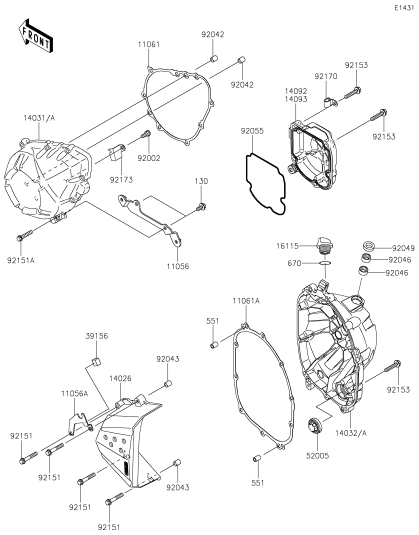


**C-5** **Engine Cover(s)**

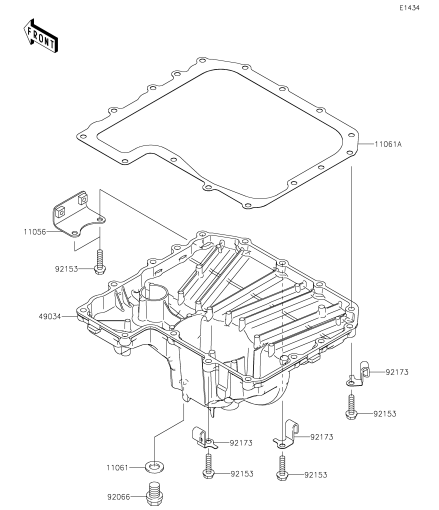


**C-6** **Oil Pan**

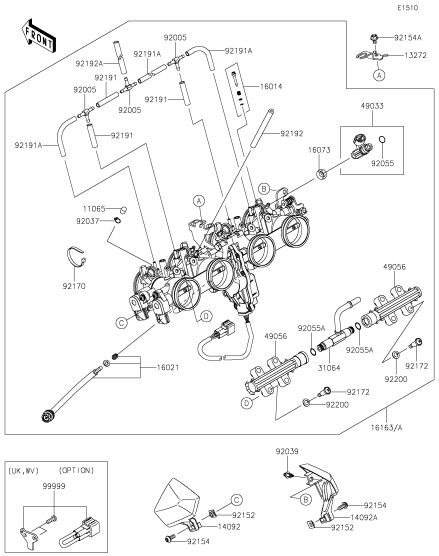


**C-7** **Throttle**

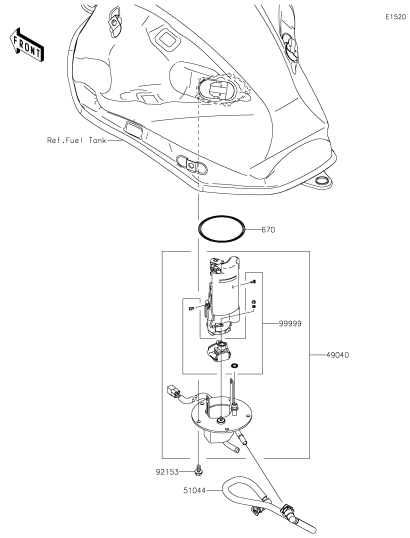


**C-8** **Fuel Pump**

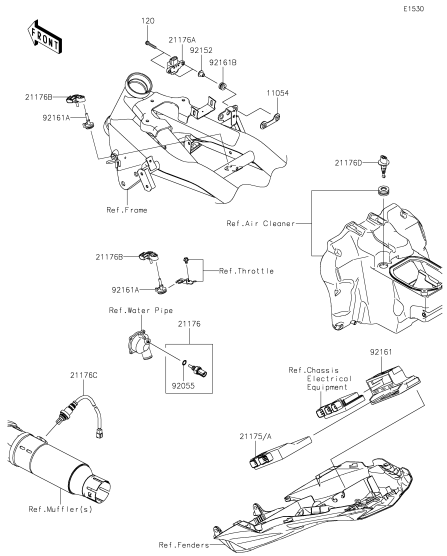


**C-9** **Fuel Injection**

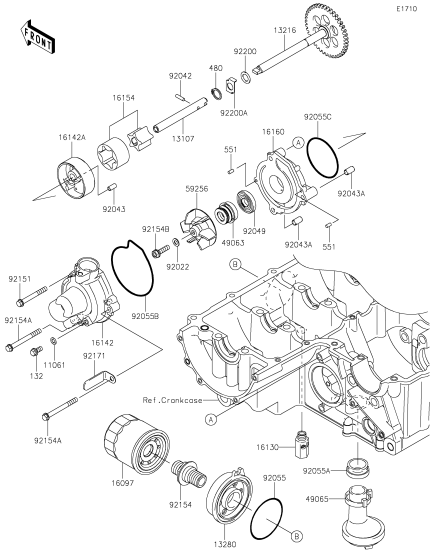


**C-10** **Oil Pump**

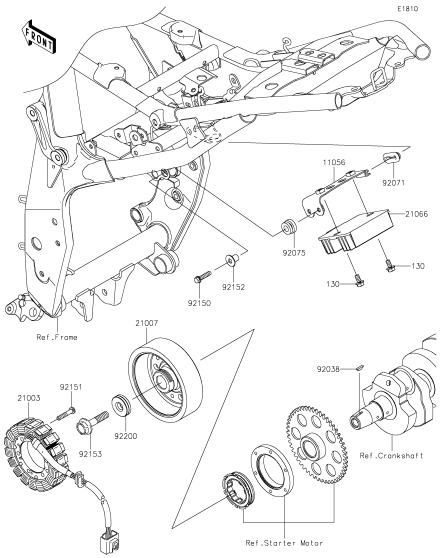


**C-11** **Generator**

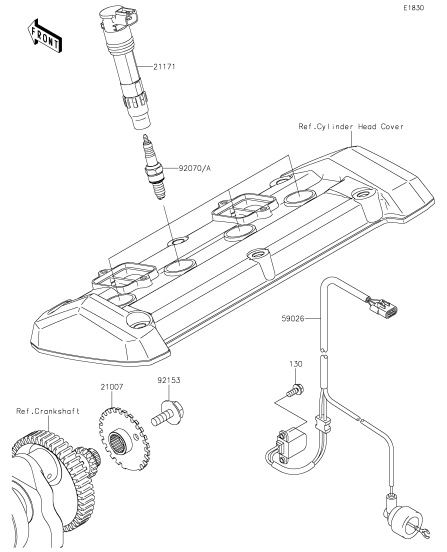


**C-12** **Ignition System**

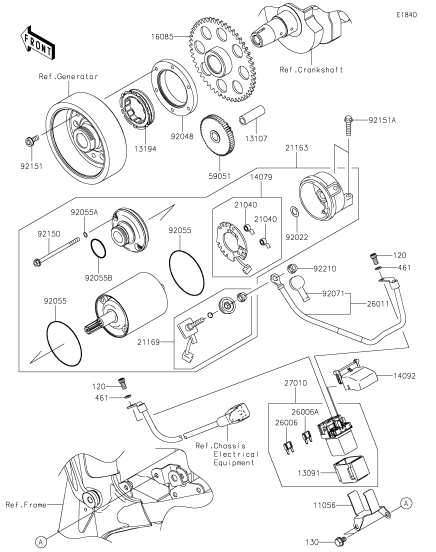


**C-13** **Starter Motor**

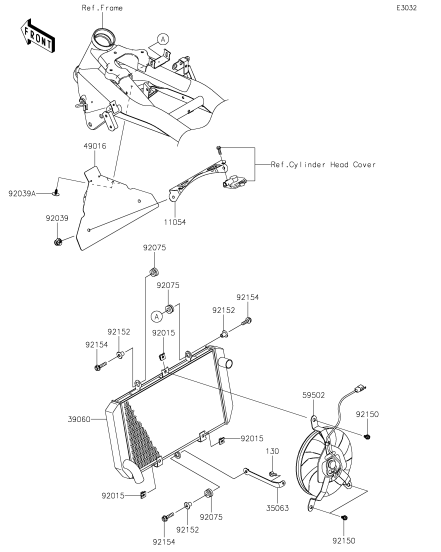


**C-14** **Radiator**

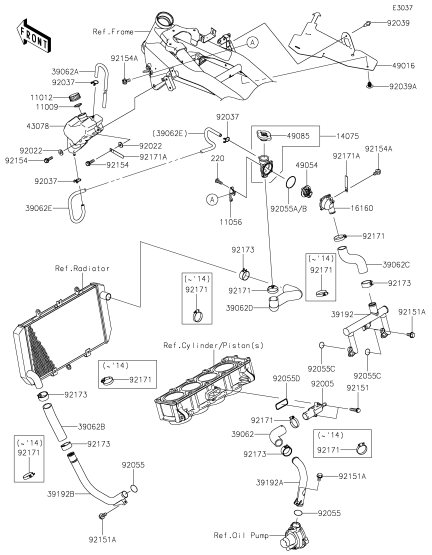


**D-3** **Water Pipe**

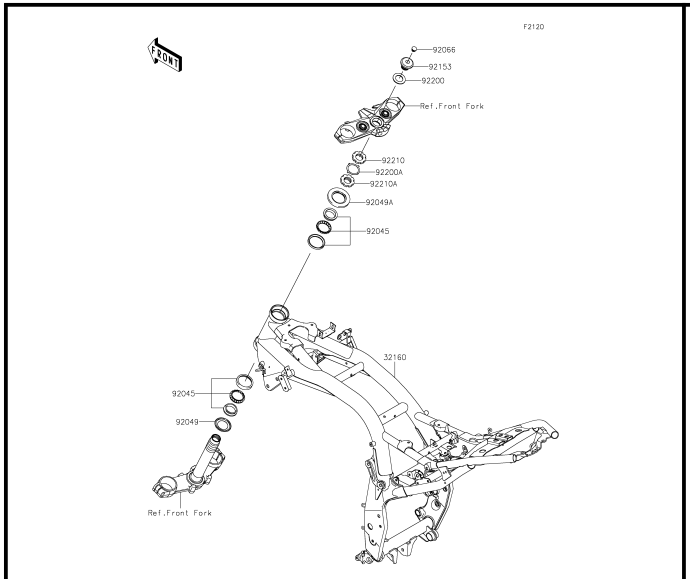


**E-3** **Frame**

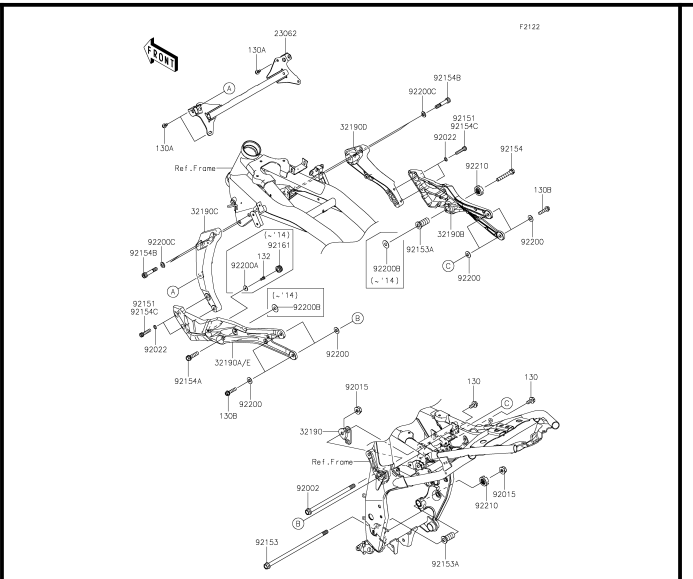


**E-4** **Engine Mount**

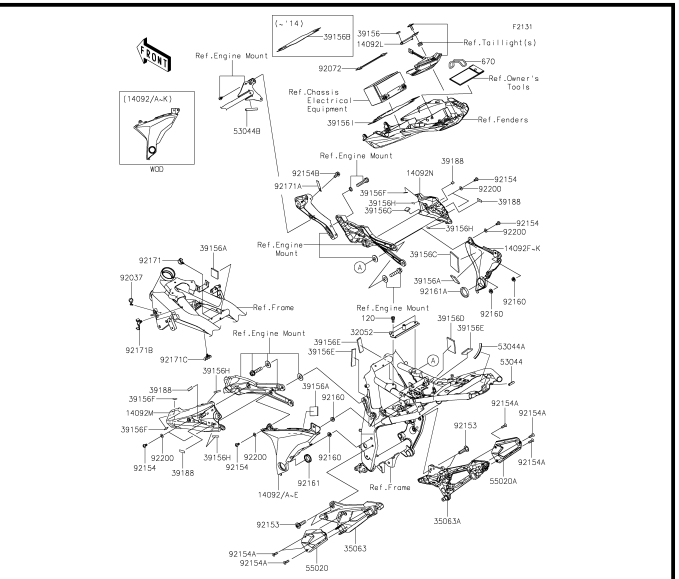


**E-5** **Frame Fittings(1/2)**

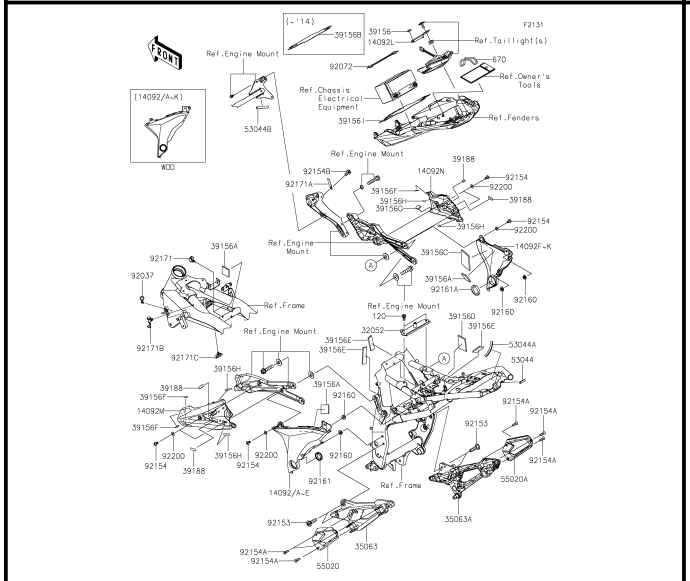


**E-6** **Frame Fittings(2/2)**

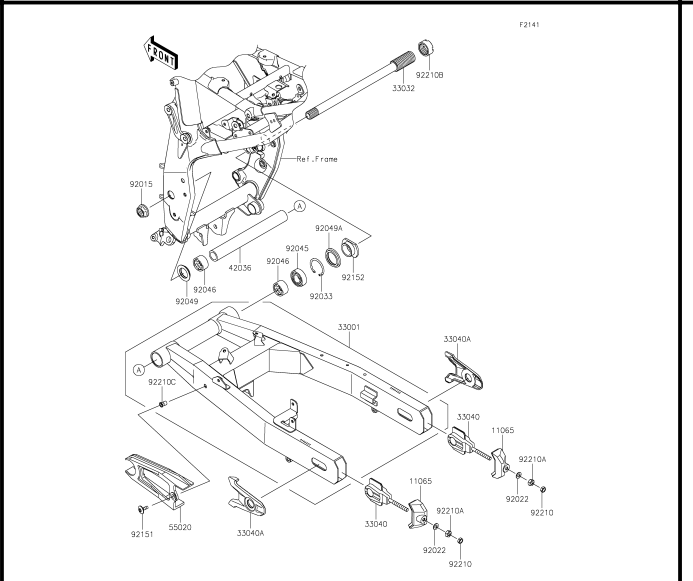


**E-7** **Swingarm**

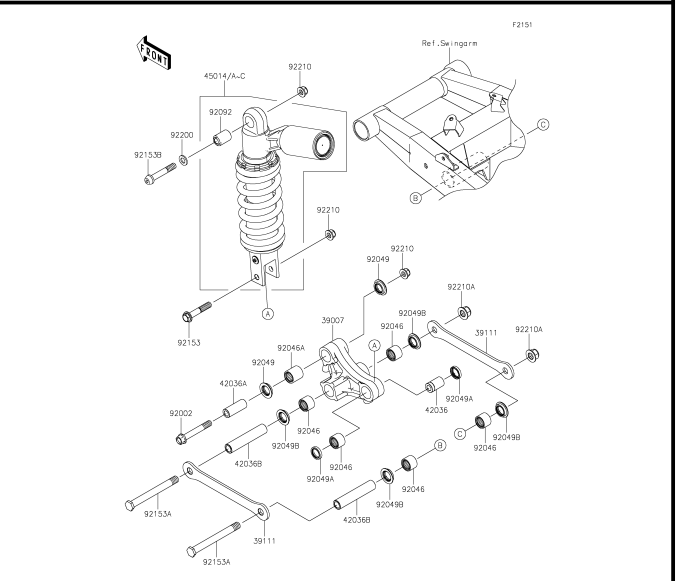


**E-8** **Suspension/Shock Absorber**

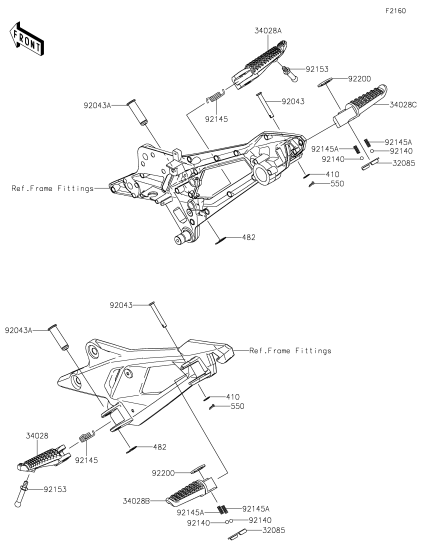


**E-9** **Footrests**

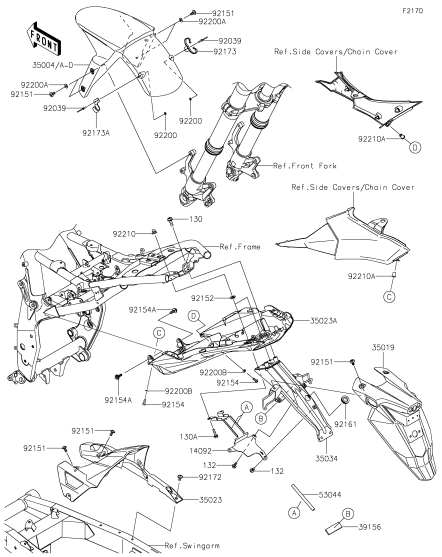


**E-10** **Fenders**

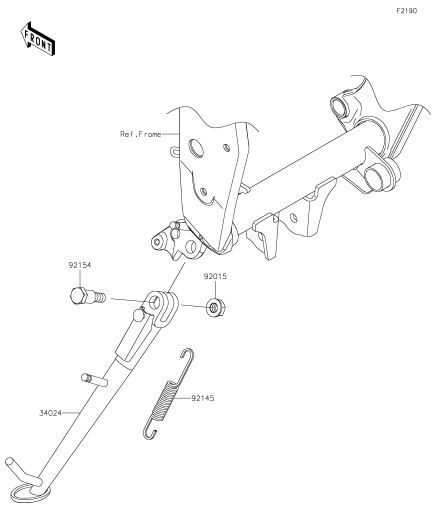


**E-11** **Stand(s)**

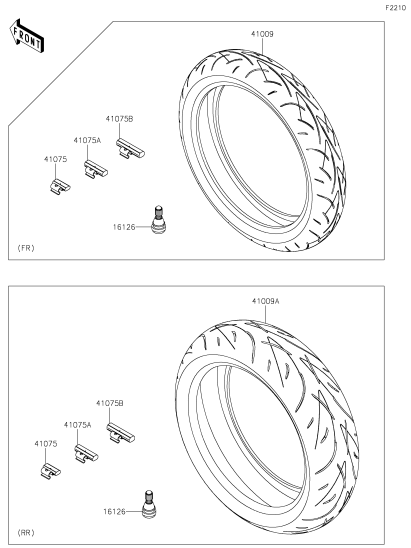


**E-12** **Tires**

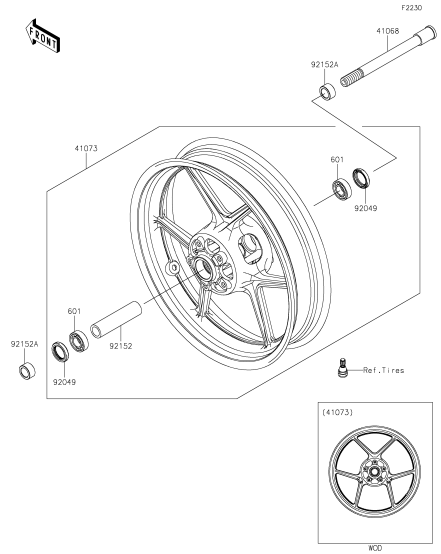


**E-13** **Front Hub**

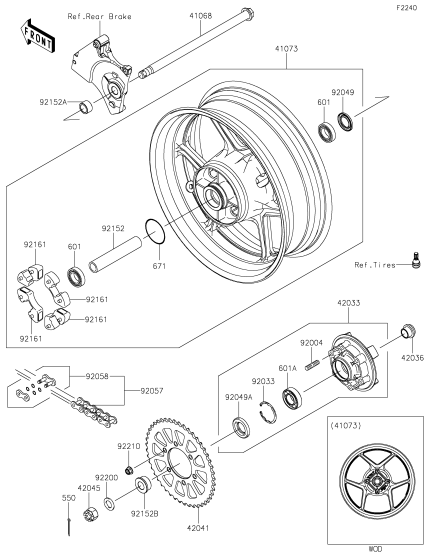


**E-14** **Rear Hub**

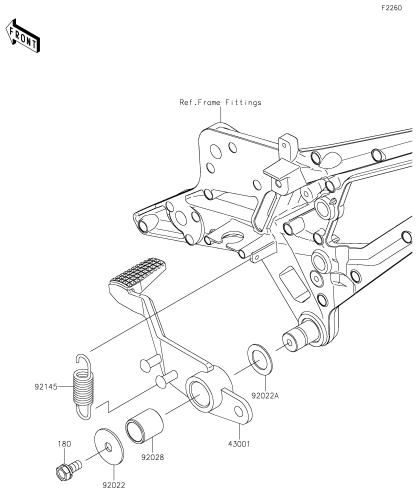


**F-3** **Brake Pedal**

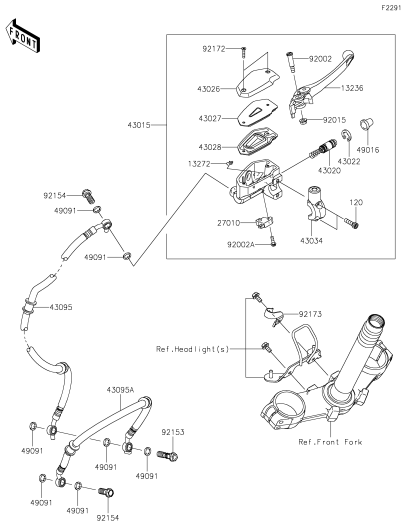


**F-4** **Front Master Cylinder**

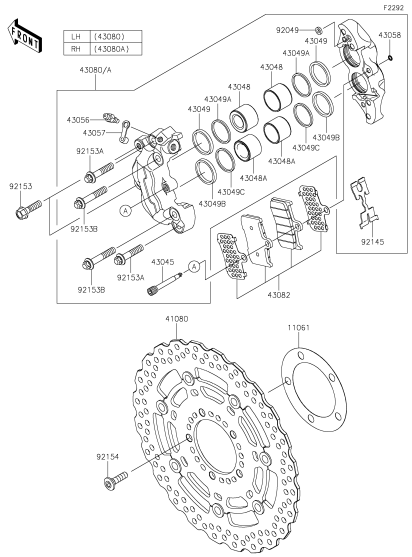


**F-5** **Front Brake**

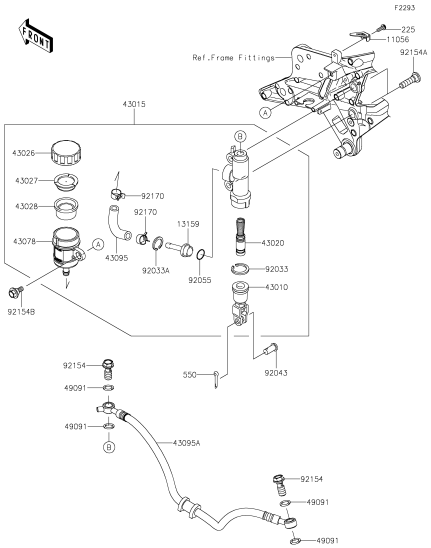


**F-6** **Rear Master Cylinder**

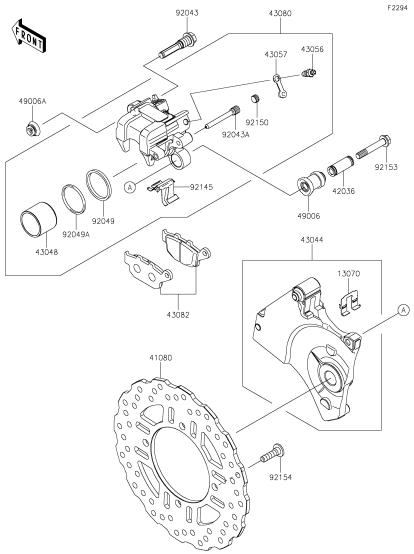


**F-7** **Rear Brake**

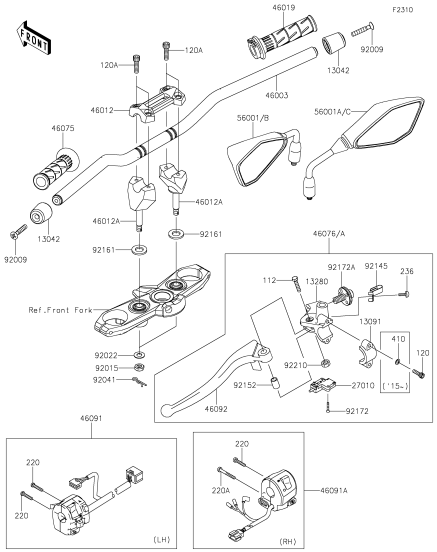


**F-8** **Handlebar**

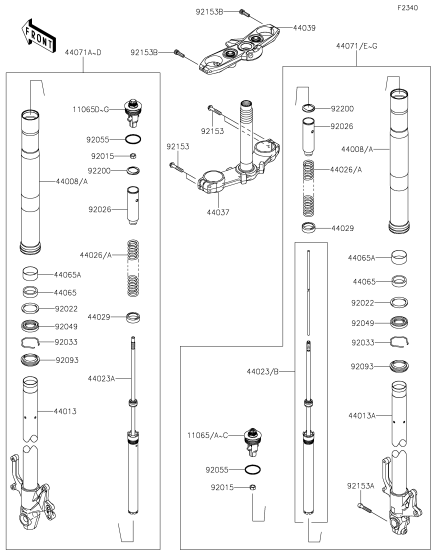


**F-9** **Front Fork(1/2)**

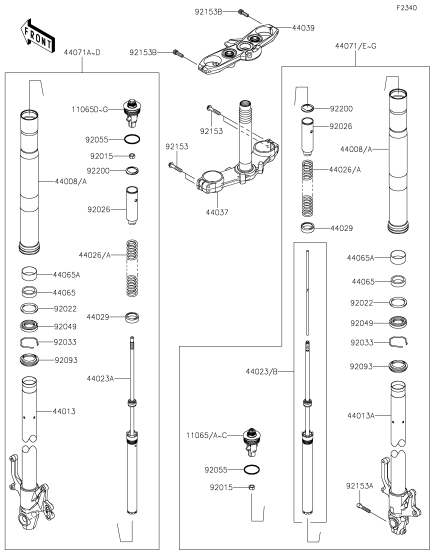


**F-10** **Front Fork(2/2)**

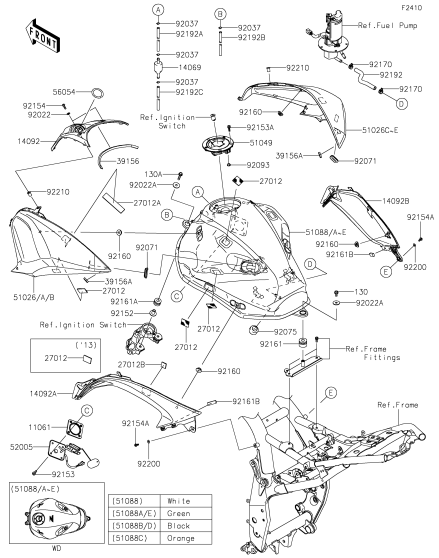


**F-11** **Fuel Tank(1/2)(ADS/AEF)**

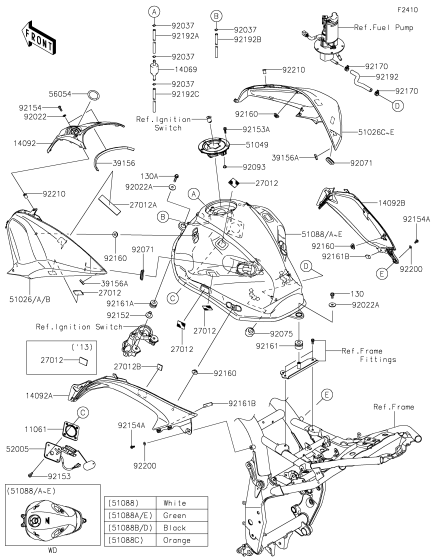


**F-12** **Fuel Tank(2/2)(ADS/AEF)**

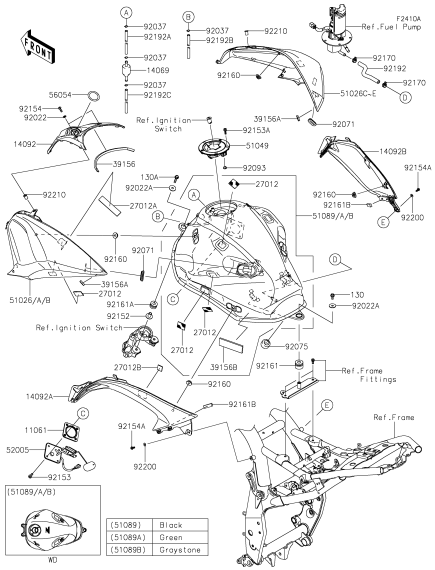


**F-13** **Fuel Tank(1/2)(AFF)**

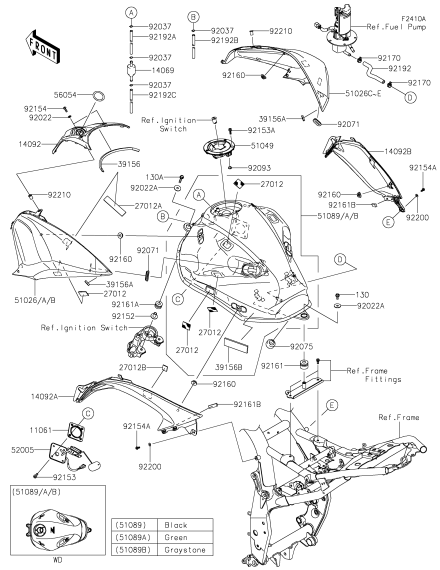


**F-14** **Fuel Tank(2/2)(AFF)**

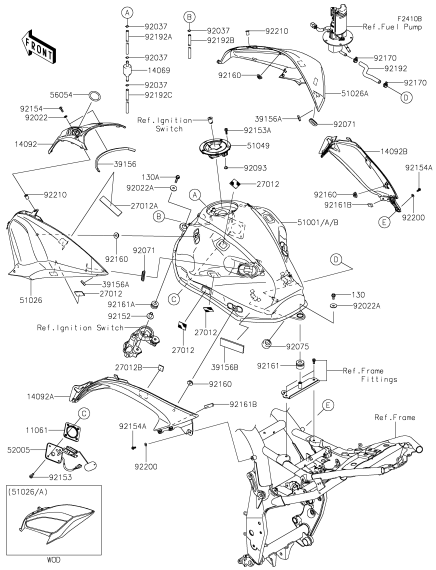


**G-3** **Fuel Tank(1/2)(AGF)**

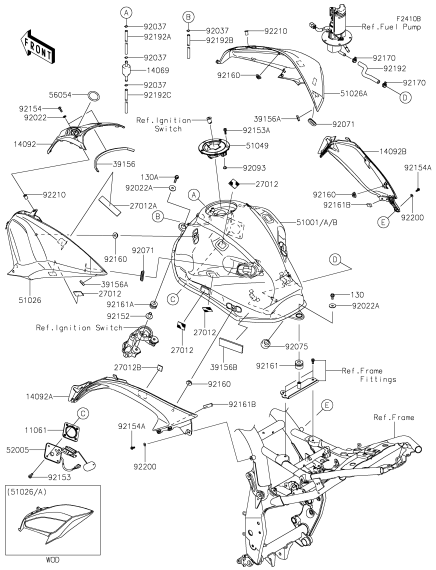


**G-4** **Fuel Tank(2/2)(AGF)**

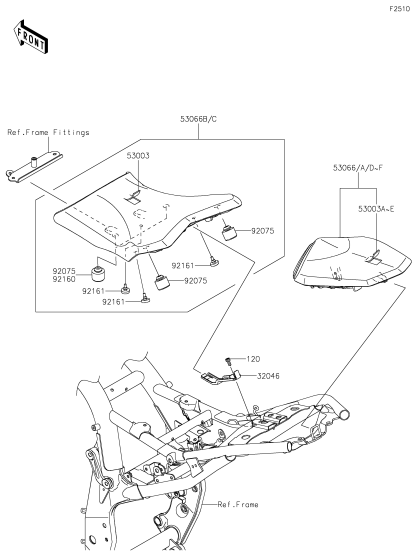


**G-5** **Seat**

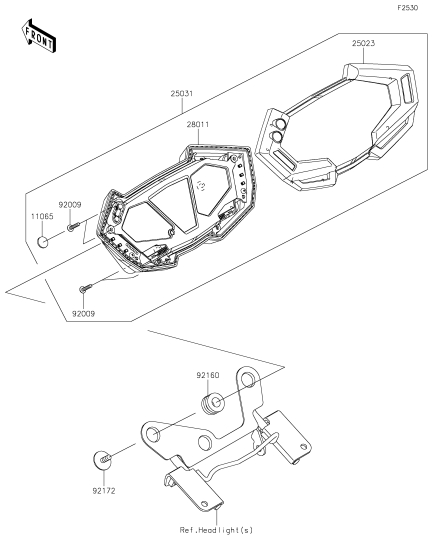


**G-6** **Meter(s)**

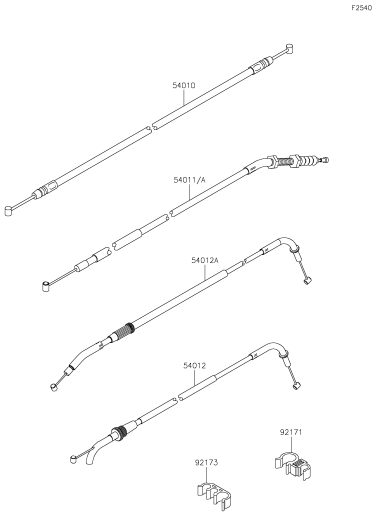


**G-7** **Cables**

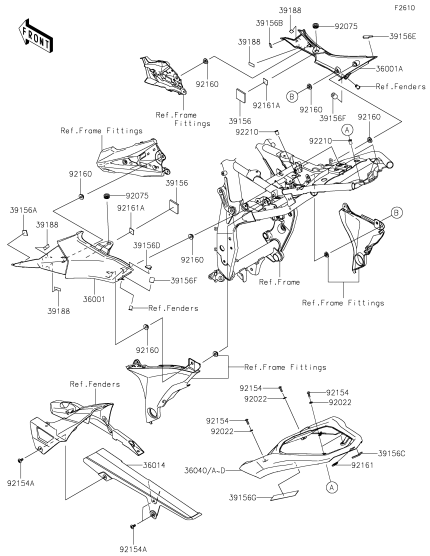


**G-8** **Side Covers/Chain Cover**

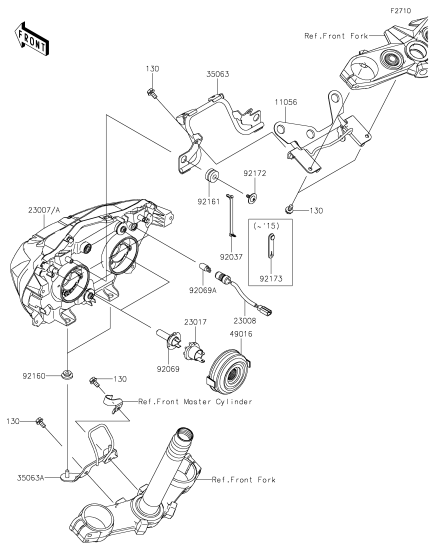


**G-9** **Headlight(s)**

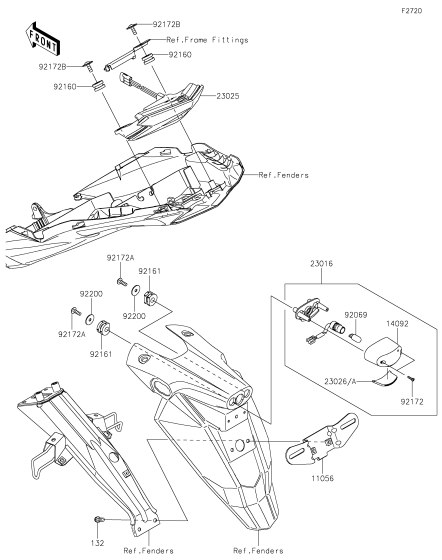


**G-10** **Taillight(s)**

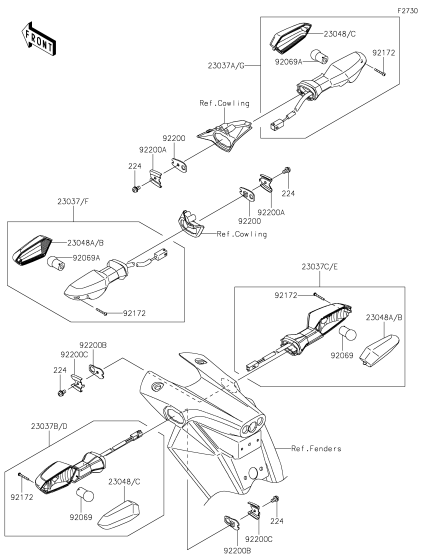


**G-11** **Turn Signals**

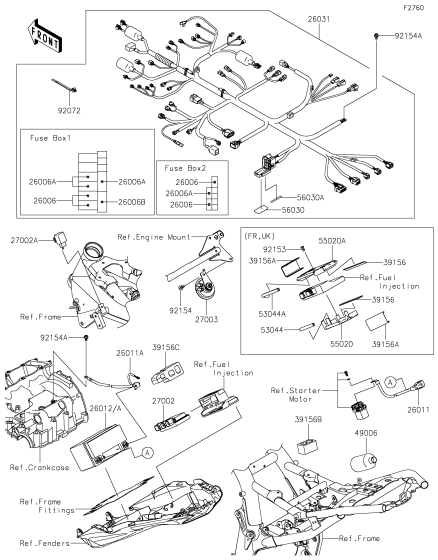


**G-12** **Chassis Electrical Equipment**

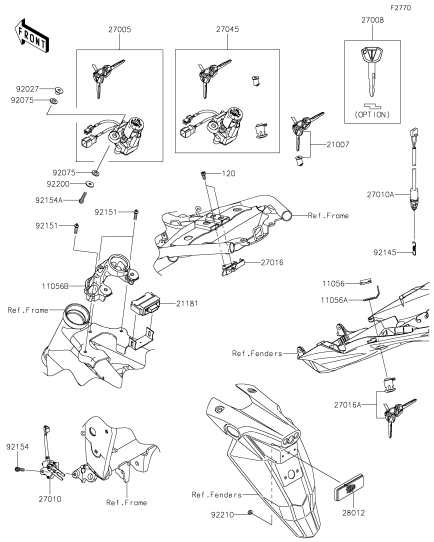


**G-13** **Ignition Switch**

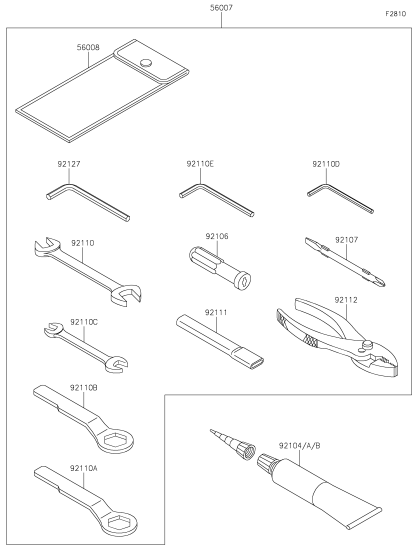


**G-14** **Owner's Tools**

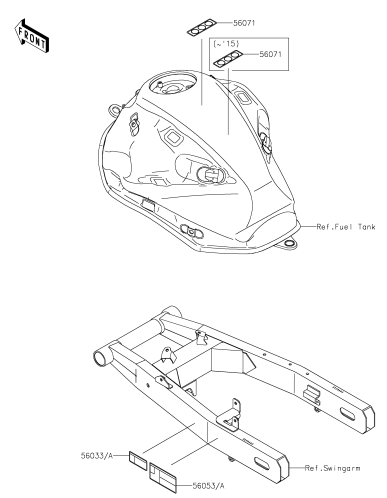


**H-3** **Labels**

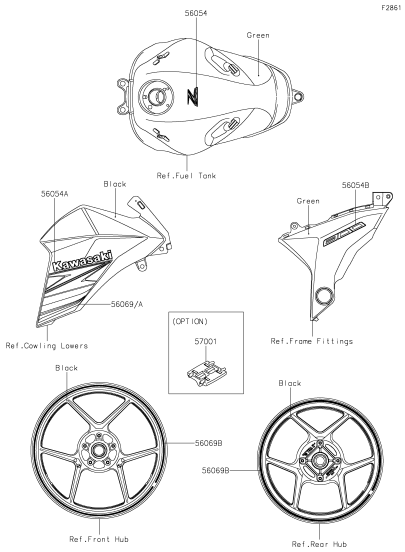


**H-4** **Decals(Green)(ADS)**

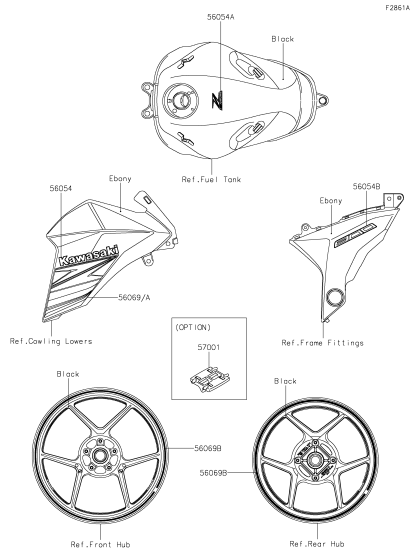


**H-5** **Decals(Ebony)(ADS)**

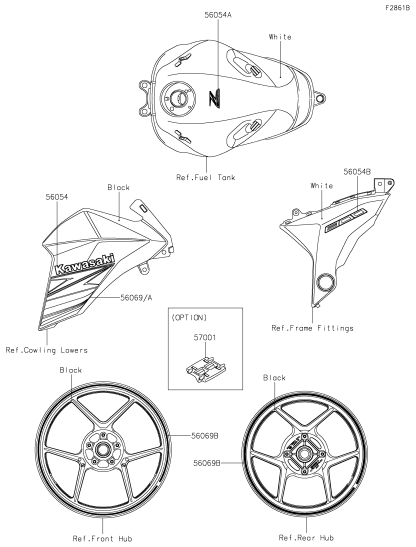


**H-6** **Decals(White)(ADS)**

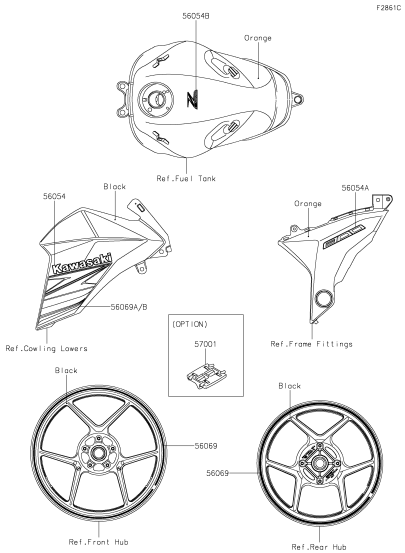


**H-7** **Decals(Orange)(AEF)**

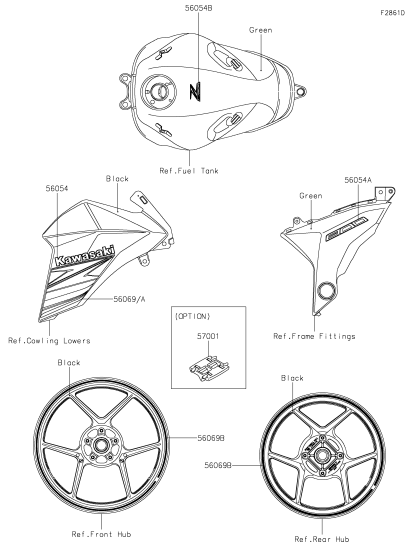


**H-8** **Decals(Green)(AEF)**

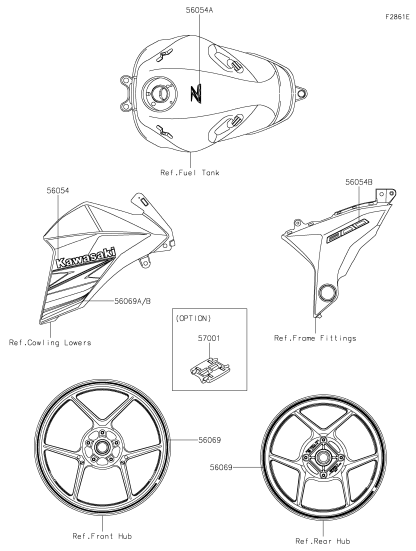


**H-9** **Decals(Black)(AEF)**

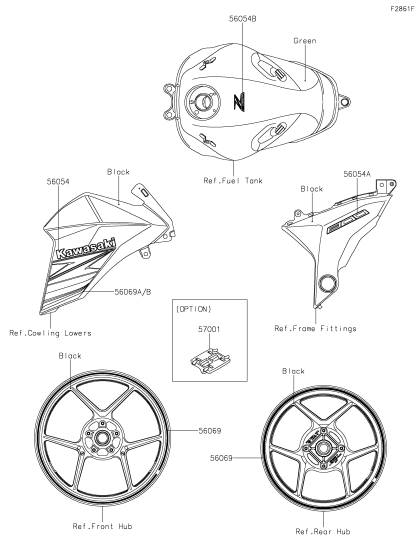


**H-10** **Decals(Green)(AFF)**

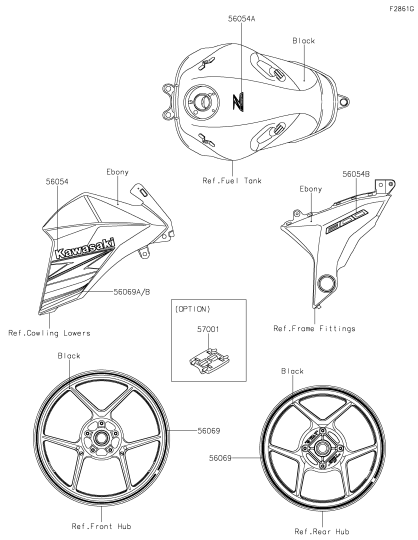


**H-11** **Decals(Black)(AFF)**

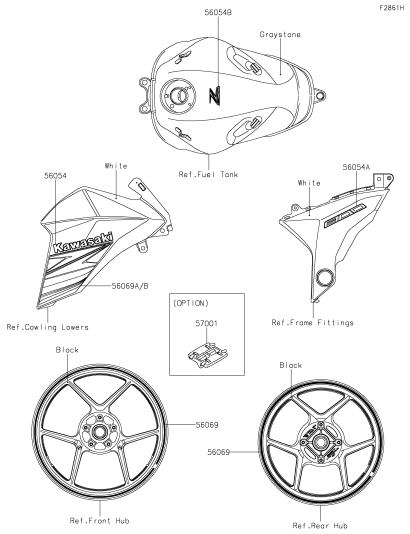


**H-12** **Decals(White)(AFF)**

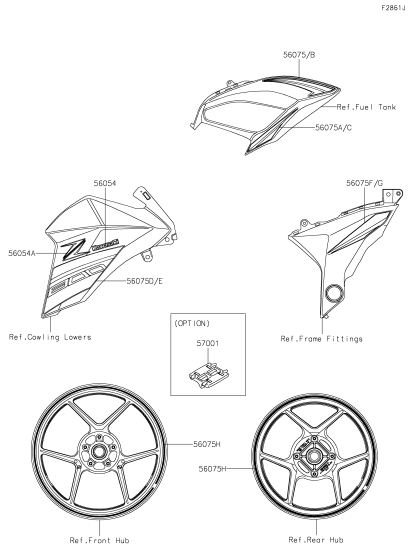


**H-13** **Decals(Red)(AGF)**

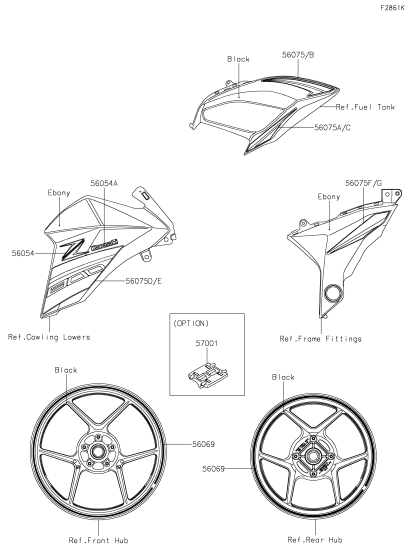


**H-14** **Decals(Ebony)(AGF)**

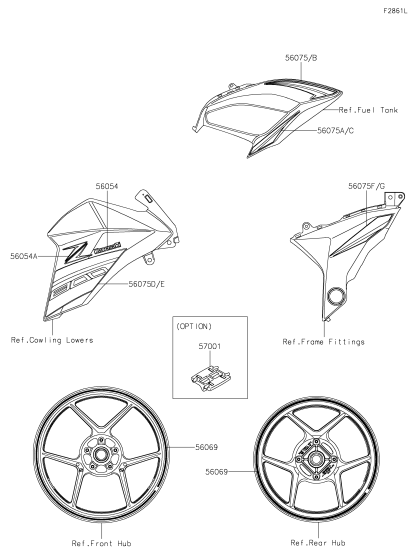


**I-3** **Decals(White)(AGF)**

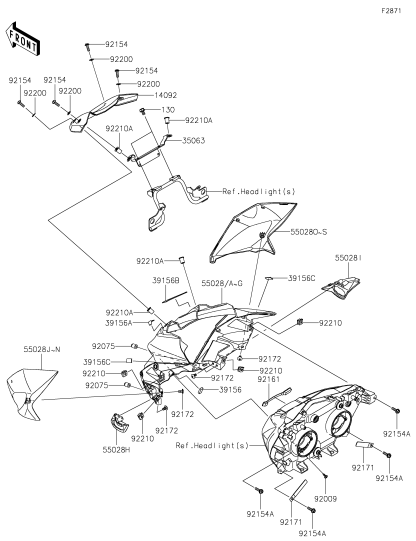


**I-4** **Cowling**

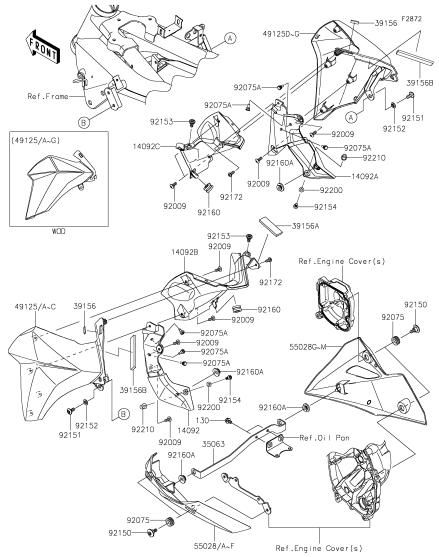


**I-5** **Cowling Lowers(1/2)**

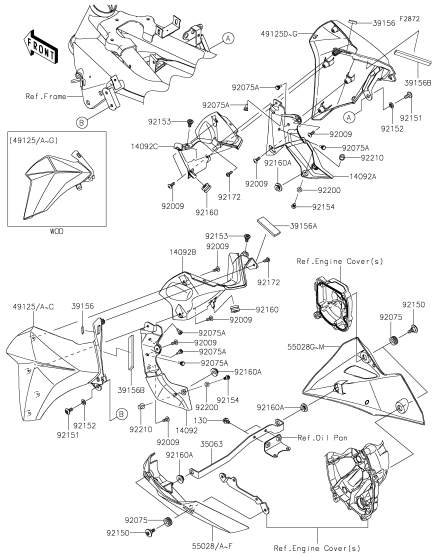


**I-6** **Cowling Lowers(2/2)**

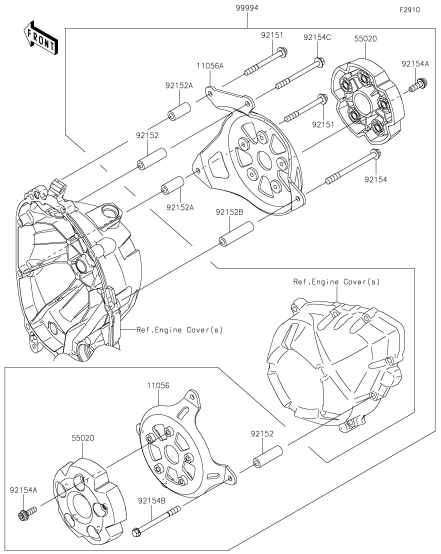


**I-7** **Accessory(Engine Guard)**

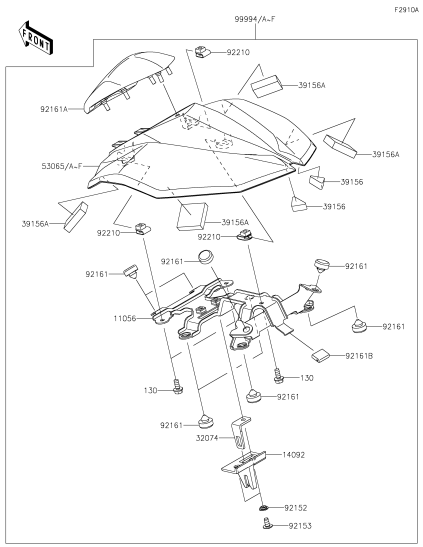


**I-8** **Accessory(Single Seat Cover)**

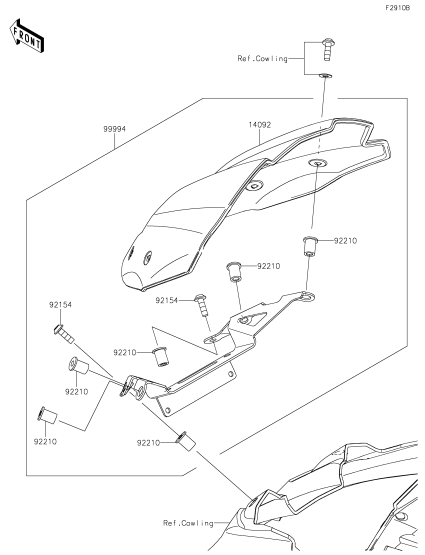


**I-9** **Accessory(Meter Cover)**

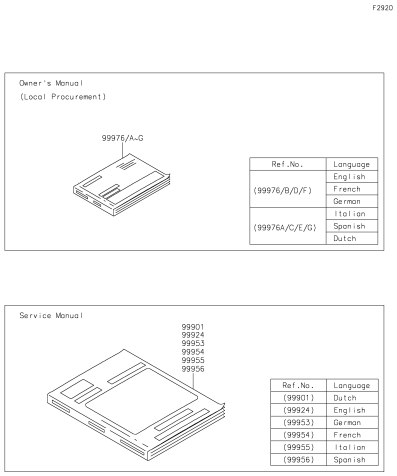


**I-10** **Manual**

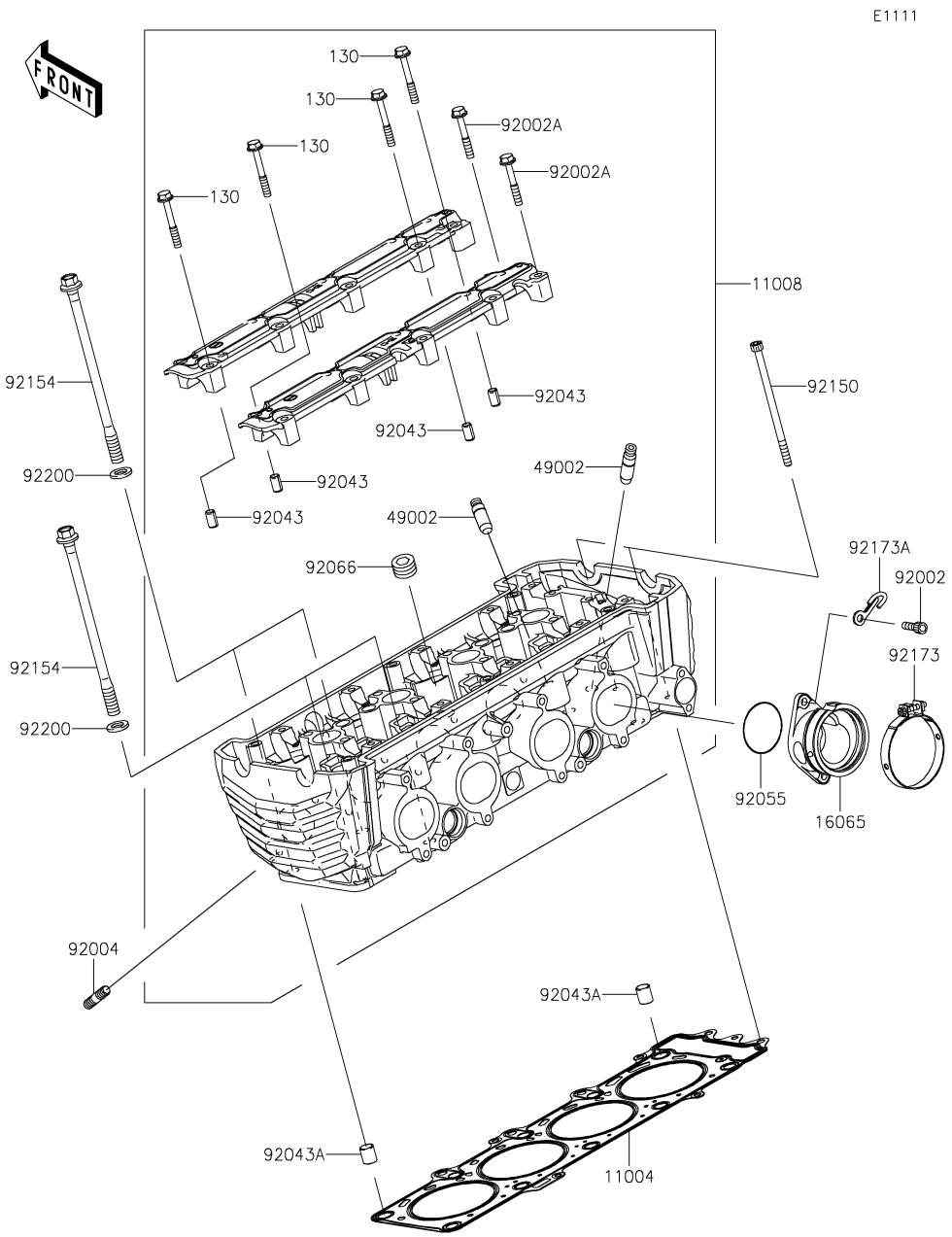


| Ref. No. | Part No. | Description | Spec Code | Quantity-ZR800 '13 ADS | '14 AEF | '15 AFF | '16 AGF | |
|---|---|---|---|---|---|---|---|---|
| 11004 | 11004-0727 | GASKET-HEAD | | 1 | 1 | 1 | 1 | |
| 11008 | 11008-0755 | HEAD-COMP-CYLINDER | | 1 | 1 | 1 | 1 | |
| 16065 | 16065-0121 | HOLDER-CARBURETOR | | 4 | 4 | 4 | 4 | |
| 49002 | 49002-1152 | GUIDE-VALVE | | 16 | 16 | 16 | 16 | |
| 92002 | 92002-1143 | BOLT,6X16 | | 8 | 8 | 8 | 8 | |
| 92002A | 92002-1756 | BOLT,6X40 | | 16 | 16 | 16 | 16 | |
| 92004 | 92004-0050 | STUD | | 8 | 8 | 8 | 8 | |
| 92043 | 92043-1263 | PIN,6.2X8X14 | | 4 | 4 | 4 | 4 | |
| 92043A | 92043-4009 | PIN,10.1X12X14 | | 2 | 2 | 2 | 2 | |
| 92055 | 92055-0737 | RING-O,43.7X1.9 | | 4 | 4 | 4 | 4 | |
| 92066 | 92066-0002 | PLUG,PT1/2X12.5 | | 5 | 5 | 5 | 5 | |
| 92150 | 92150-1755 | BOLT,SOCKET,6X110 | | 2 | 2 | 2 | 2 | |
| 92154 | 92154-1086 | BOLT,FLANGED,10X165 | | 10 | 10 | 10 | 10 | |
| 92173 | 92173-0922 | CLAMP,62MM | | 4 | 4 | 4 | 4 | |
| 92173A | 92173-0929 | CLAMP | | 1 | 1 | 1 | 1 | |
| 92200 | 92200-0363 | WASHER,10.5X19X2.3 | | 10 | 10 | 10 | 10 | |
| 130 | 130CA0645 | BOLT-FLANGED,6X45 | | 4 | 4 | 4 | 4 | |

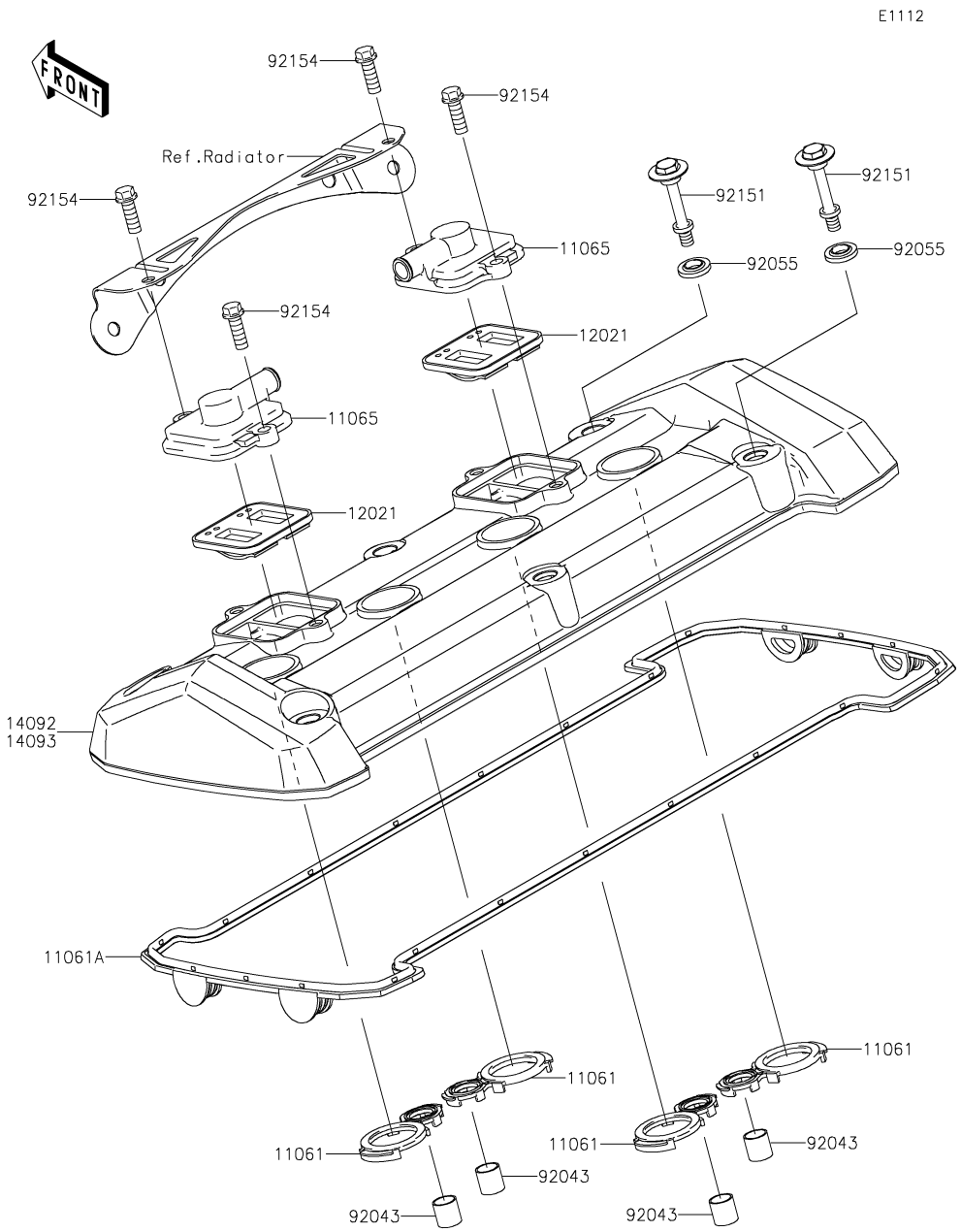


| Ref. No. | Part No. | Description | Spec Code | Quantity-ZR800 '13 ADS | '14 AEF | '15 AFF | '16 AGF | |
|---|---|---|---|---|---|---|---|---|
| 11061 | 11061-0104 | GASKET,SPARK PLUG | | 4 | 4 | 4 | 4 | |
| 11061A | 11061-0425 | GASKET | | 1 | 1 | 1 | 1 | |
| 11065 | 11065-1247 | CAP | | 2 | 2 | 2 | 2 | |
| 12021 | 12021-0708 | VALVE-ASSY-REED | | 2 | 2 | 2 | 2 | |
| 14092 | 14092-0972 | COVER,HEAD | | 1 | 1 | 1 | | |
| 14093 | 14093-0377 | COVER,HEAD | | | | | 1 | |
| 92043 | 92043-4009 | PIN,10.1X12X14 | | 4 | 4 | 4 | 4 | |
| 92055 | 92055-0187 | RING-O | | 6 | 6 | 6 | 6 | |
| 92151 | 92151-1221 | BOLT,HEAD COVER | | 6 | 6 | 6 | 6 | |
| 92154 | 92154-0784 | BOLT,FLANGED,6X18 | | 4 | 4 | 4 | 4 | |

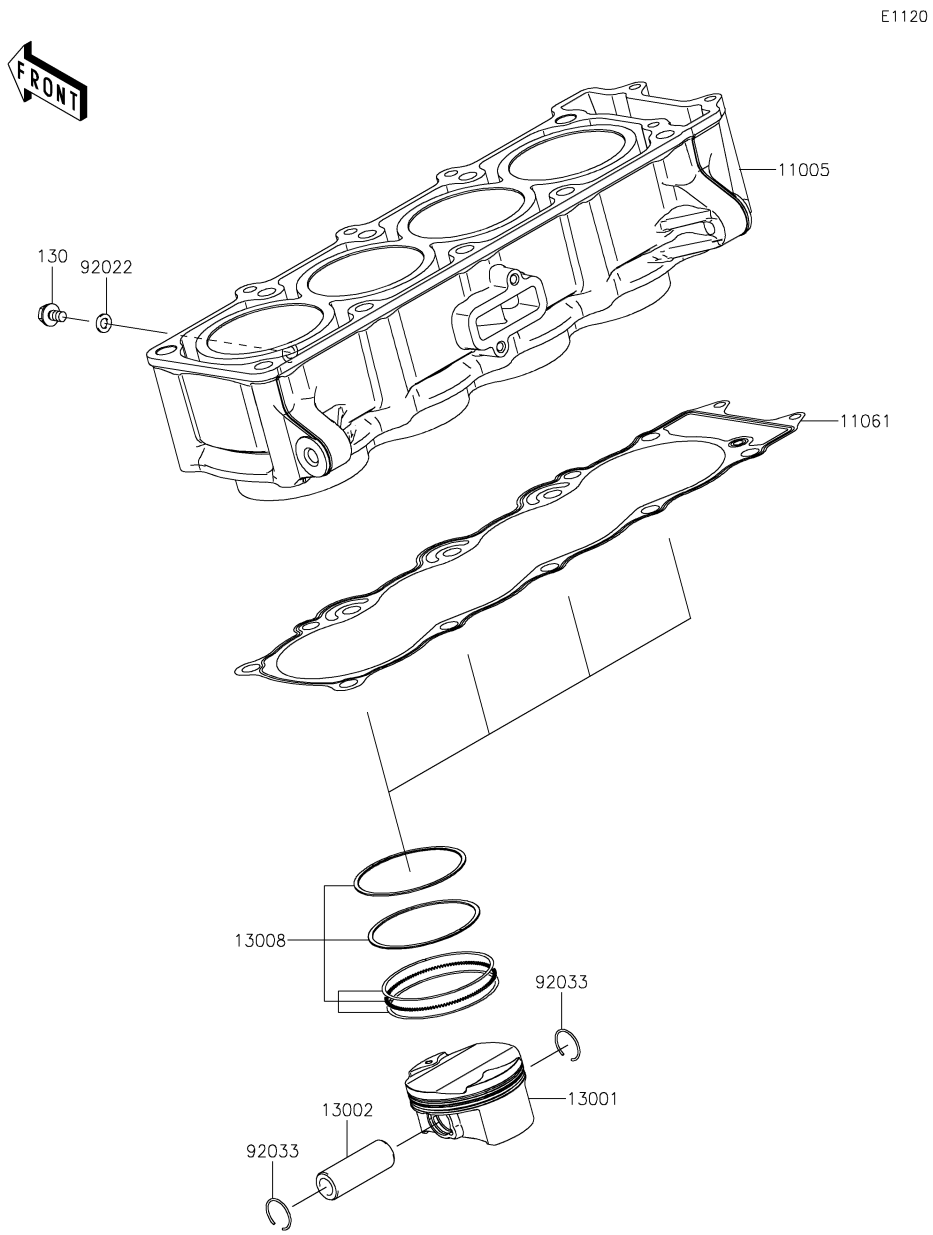


| Ref. No. | Part No. | Description | Spec Code | Quantity-ZR800 '13 ADS | '14 AEF | '15 AFF | '16 AGF | |
|---|---|---|---|---|---|---|---|---|
| 11005 | 11005-0622 | CYLINDER-ENGINE | | 1 | 1 | 1 | 1 | |
| 11061 | 11061-1168 | GASKET,CYLINDER BASE | | 1 | 1 | 1 | 1 | |
| 13001 | 13001-0731 | PISTON-ENGINE | | 4 | 4 | 4 | 4 | |
| 13002 | 13002-0022 | PIN-PISTON | | 4 | 4 | 4 | 4 | |
| 13008 | 13008-0557 | RING-SET-PISTON | | 4 | 4 | 4 | 4 | |
| 92022 | 92022-304 | WASHER,6.2X11X1 | | 1 | 1 | 1 | 1 | |
| 92033 | 92033-1099 | RING-SNAP,20.5X1.2 | | 8 | 8 | 8 | 8 | |
| 130 | 130BD0610 | BOLT-FLANGED,6X10 | | 1 | 1 | 1 | 1 | |

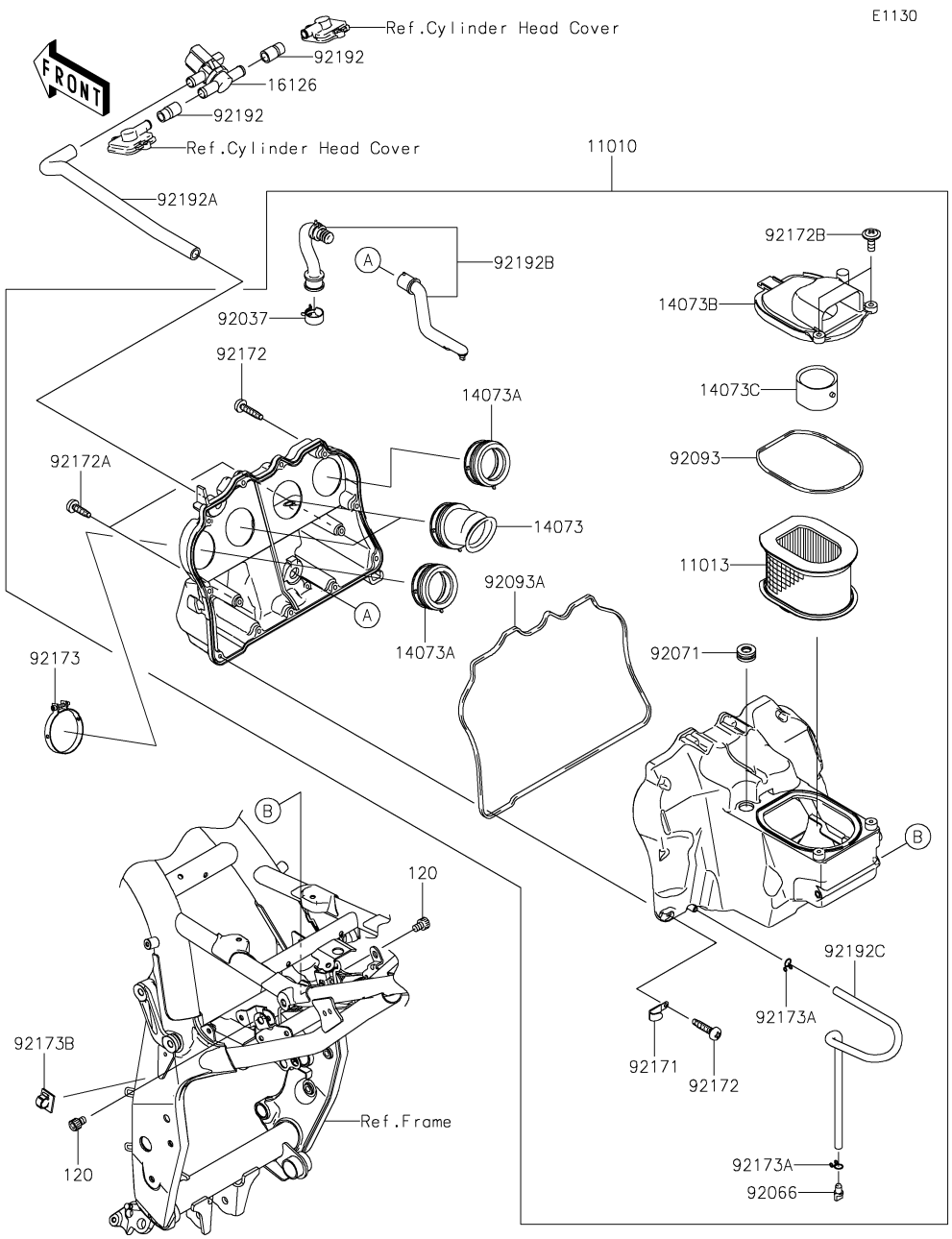


| Ref. No. | Part No. | Description | Spec Code | Quantity-ZR800 '13 ADS | '14 AEF | '15 AFF | '16 AGF | |
|---|---|---|---|---|---|---|---|---|
| 11010 | 11010-0775 | FILTER-ASSY-AIR | | 1 | 1 | 1 | 1 | |
| 11013 | 11013-0044 | ELEMENT-AIR FILTER | | 1 | 1 | 1 | 1 | |
| 14073 | 14073-0738 | DUCT,FUNNEL #2&#3 | | 2 | 2 | 2 | 2 | |
| 14073A | 14073-0746 | DUCT,FUNNEL #1&#4 | | 2 | 2 | 2 | 2 | |
| 14073B | 14073-0748 | DUCT,INTAKE,TOP | | 1 | 1 | 1 | 1 | |
| 14073C | 14073-0749 | DUCT,INTAKE,UNDER | | 1 | 1 | 1 | 1 | |
| 16126 | 16126-1437 | VALVE,AIR SWITCHING | | 1 | 1 | 1 | 1 | |
| 92037 | 92037-1460 | CLAMP,HOSE CLIP | | 1 | 1 | 1 | 1 | |
| 92066 | 92066-1211 | PLUG,DRAIN | | 1 | 1 | 1 | 1 | |
| 92071 | 92071-0714 | GROMMET | | 1 | 1 | 1 | 1 | |
| 92093 | 92093-0591 | SEAL | | 1 | 1 | 1 | 1 | |
| 92093A | 92093-0592 | SEAL | | 1 | 1 | 1 | 1 | |
| 92171 | 92171-1539 | CLAMP | | 1 | 1 | 1 | 1 | |
| 92172 | 92172-0803 | SCREW,TAPPING,5X25 | | 11 | 11 | 11 | 11 | |
| 92172A | 92172-0804 | SCREW,TAPPING,5X20 | | 2 | 2 | 2 | 2 | |
| 92172B | 92172-0805 | SCREW,6X16 | | 2 | 2 | 2 | 2 | |
| 92173 | 92173-0927 | CLAMP,58MM | | 4 | 4 | 4 | 4 | |
| 92173A | 92173-1044 | CLAMP,10MM | | 2 | 2 | 2 | 2 | |
| 92173B | 92173-1055 | CLAMP,DRAIN | | 1 | 1 | 1 | 1 | |
| 92192 | 92192-0033 | TUBE,HEAD-ASV | | 2 | 2 | 2 | 2 | |
| 92192A | 92192-1106 | TUBE,ASV-A/C | | 1 | 1 | 1 | 1 | |
| 92192B | 92192-1158 | TUBE,BREATHER | | 1 | 1 | 1 | 1 | |
| 92192C | 92192-1313 | TUBE,DRAIN | | 1 | 1 | 1 | 1 | |
| 120 | 120CA0608 | BOLT-SOCKET,6X8 | | 2 | 2 | 2 | 2 | |

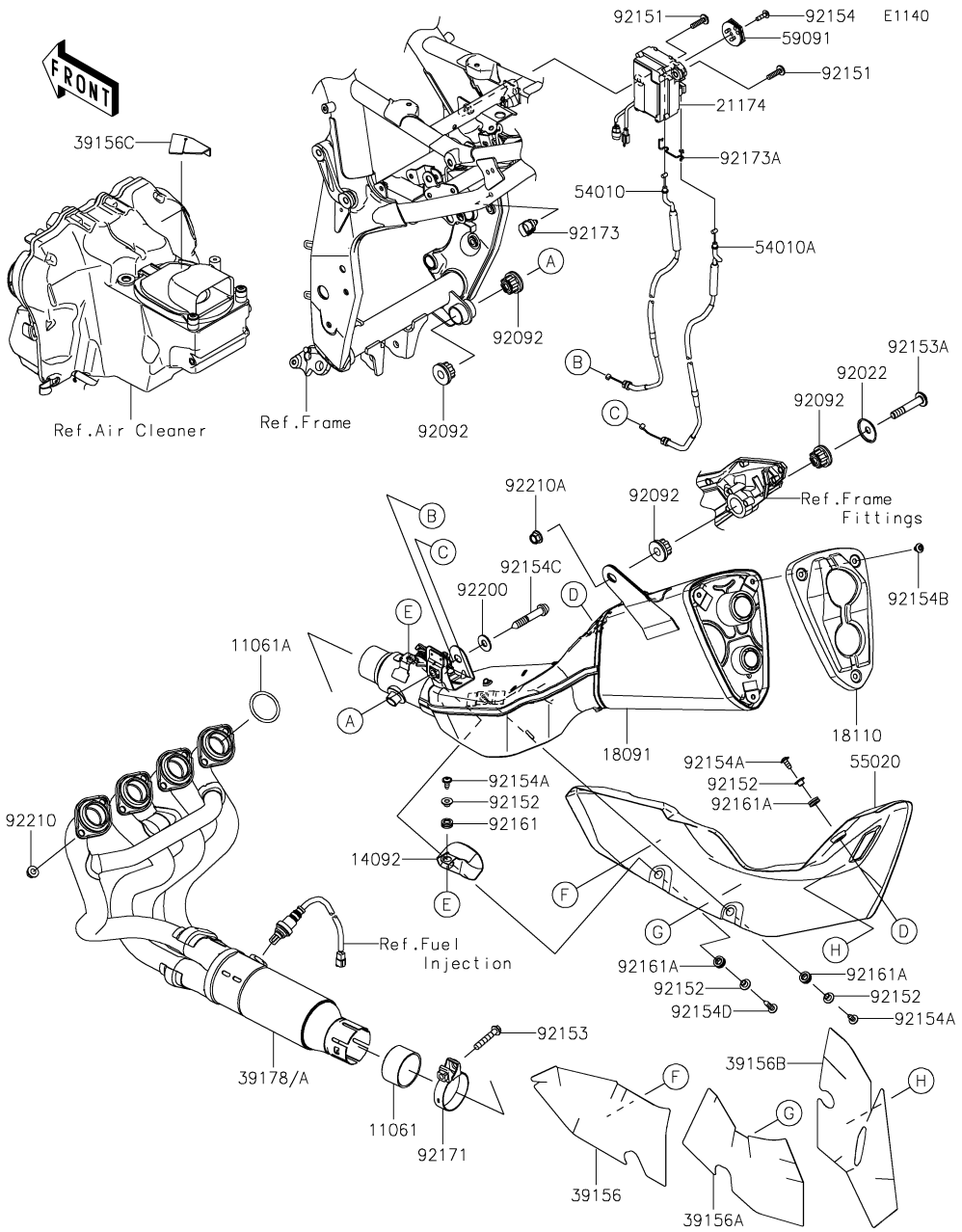


| Ref. No. | Part No. | Description | Spec Code | Quantity-ZR800 '13 ADS | '14 AEF | '15 AFF | '16 AGF | |
|---|---|---|---|---|---|---|---|---|
| 11061 | 11061-0800 | GASKET,MUFFLER-EX | | 1 | 1 | 1 | 1 | |
| 11061A | 11061-0823 | GASKET,CYL HED-EX | | 4 | 4 | 4 | 4 | |
| 14092 | 14092-0949 | COVER,PULLEY | | 1 | 1 | 1 | 1 | |
| 18091 | 18091-0908 | BODY-COMP-MUFFLER | | 1 | 1 | 1 | 1 | |
| 18110 | 18110-0157 | BODY END-MUFFLER | | 1 | 1 | 1 | 1 | |
| 21174 | 21174-0008 | MOTOR-ELECTRIC | | 1 | 1 | 1 | 1 | |
| 39156 | 39156-0885 | PAD,FRONT | | 1 | 1 | 1 | 1 | |
| 39156A | 39156-0886 | PAD,MID | | 1 | 1 | 1 | 1 | |
| 39156B | 39156-0887 | PAD,REAR | | 1 | 1 | 1 | 1 | |
| 39156C | 39156-0946 | PAD,AIR FILTER | | 1 | 1 | 1 | 1 | |
| 39178 | 39178-0191 | MANIFOLD-COMP-EXHAUST | | 1 | 1 | | | |
| 39178A | 39178-0225 | MANIFOLD-COMP-EXHAUST | | | | 1 | 1 | |
| 54010 | 54010-0586 | CABLE,OPEN | | 1 | 1 | 1 | 1 | |
| 54010A | 54010-0587 | CABLE,CLOSE | | 1 | 1 | 1 | 1 | |
| 55020 | 55020-0838 | GUARD,MUFFLER | | 1 | 1 | 1 | 1 | |
| 59091 | 59091-0007 | PULLEY | | 1 | 1 | 1 | 1 | |
| 92022 | 92022-289 | WASHER | | 1 | 1 | 1 | 1 | |
| 92092 | 92092-1087 | BUSHING-RUBBER,MUFFLER | | 4 | 4 | 4 | 4 | |
| 92151 | 92151-1611 | BOLT,SOCKET,6X25 | | 2 | 2 | 2 | 2 | |
| 92152 | 92152-1602 | COLLAR,6.3X8.3X7.2 | | 4 | 4 | 4 | 4 | |
| 92153 | 92153-0702 | BOLT,8X45 | | 1 | 1 | 1 | 1 | |
| 92153A | 92153-1930 | BOLT,SOCKET,10X58 | | 1 | 1 | 1 | 1 | |
| 92154 | 92154-0217 | BOLT,TORX,5X18 | | 1 | 1 | 1 | 1 | |
| 92154A | 92154-0856 | BOLT,SOCKET,6X14 | | 3 | 3 | 3 | 3 | |
| 92154B | 92154-0987 | BOLT,HEX HEAD,6X8 | | 3 | 3 | 3 | 3 | |
| 92154C | 92154-1191 | BOLT,SOCKET | | 1 | 1 | 1 | 1 | |
| 92154D | 92154-1192 | BOLT,SOCKET,6X27 | | 1 | 1 | 1 | 1 | |
| 92161 | 92161-0999 | DAMPER,PULLEY COVER | | 1 | 1 | 1 | 1 | |
| 92161A | 92161-1475 | DAMPER | | 3 | 3 | 3 | 3 | |
| 92171 | 92171-0133 | CLAMP | | 1 | 1 | 1 | 1 | |
| 92173 | 92173-0736 | CLAMP,12MM DIA. | | 1 | 1 | 1 | 1 | |
| 92173A | 92173-0921 | CLAMP | | 1 | 1 | 1 | 1 | |
| 92200 | 92200-1377 | WASHER,10.5X25X2.0 | | 1 | 1 | 1 | 1 | |
| 92210 | 92210-0076 | NUT,8MM | | 8 | 8 | 8 | 8 | |
| 92210A | 92210-1139 | NUT,LOCK,FLANGED,10MM | | 1 | 1 | 1 | 1 | |

E1210

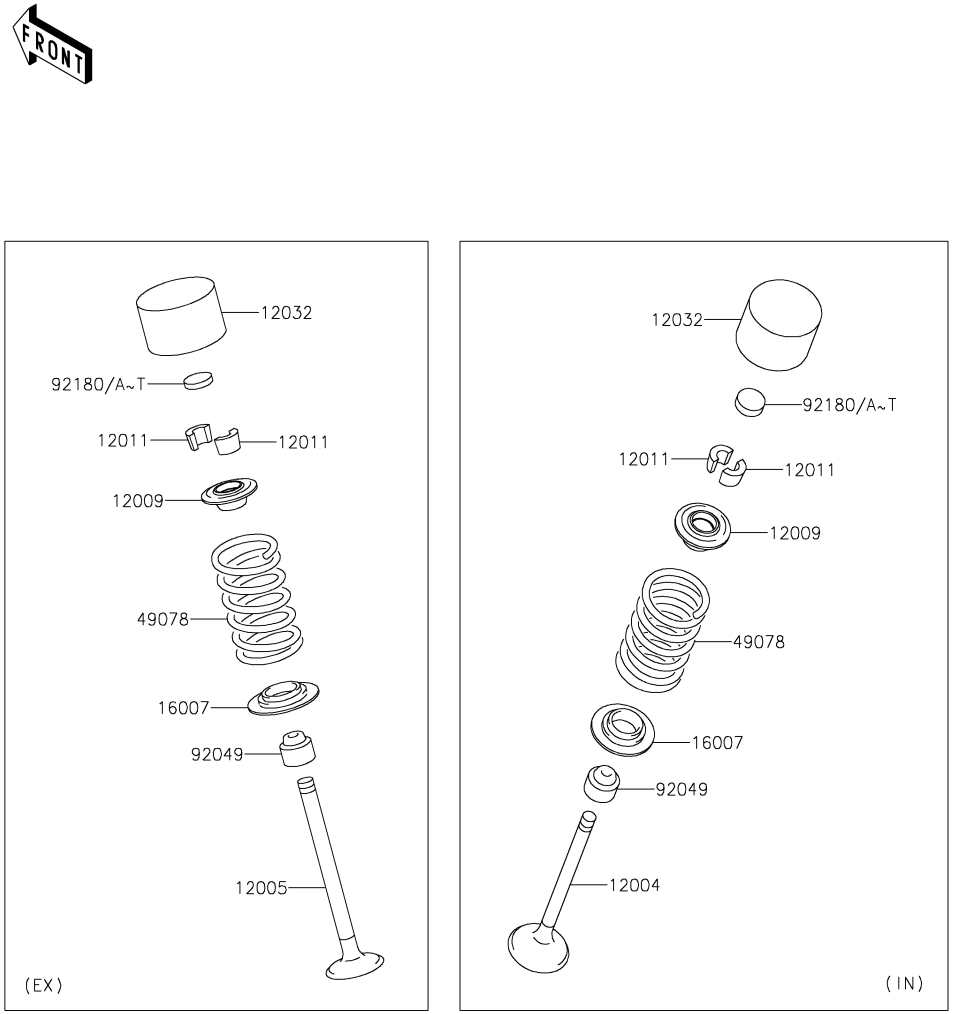


| Ref. No. | Part No. | Description | Spec Code | Quantity-ZR800 '13 ADS | '14 AEF | '15 AFF | '16 AGF | |
|---|---|---|---|---|---|---|---|---|
| 12004 | 12004-0718 | VALVE-INTAKE | | 8 | 8 | 8 | 8 | |
| 12005 | 12005-0748 | VALVE-EXHAUST | | 8 | 8 | 8 | 8 | |
| 12009 | 12009-0001 | RETAINER-VALVE SPRING | | 16 | 16 | 16 | 16 | |
| 12011 | 12011-1052 | COLLET | | 32 | 32 | 32 | 32 | |
| 12032 | 12032-0018 | TAPPET | | 16 | 16 | 16 | 16 | |
| 16007 | 16007-1227 | SEAT-SPRING | | 16 | 16 | 16 | 16 | |
| 49078 | 49078-0023 | SPRING-ENGINE VALVE | | 16 | 16 | 16 | 16 | |
| 92049 | 92049-1308 | SEAL-OIL,VALVE GUIDE | | 16 | 16 | 16 | 16 | |
| 92180 | 92180-1014 | SHIM,T=2.50 | | 16 | 16 | 16 | 16 | |
| 92180A | 92180-1016 | SHIM,T=2.55 | | AR | AR | AR | AR | |
| 92180B | 92180-1018 | SHIM,T=2.60 | | AR | AR | AR | AR | |
| 92180C | 92180-1020 | SHIM,T=2.65 | | AR | AR | AR | AR | |
| 92180D | 92180-1022 | SHIM,T=2.70 | | AR | AR | AR | AR | |
| 92180E | 92180-1024 | SHIM,T=2.75 | | AR | AR | AR | AR | |
| 92180F | 92180-1026 | SHIM,T=2.80 | | AR | AR | AR | AR | |
| 92180G | 92180-1028 | SHIM,T=2.85 | | AR | AR | AR | AR | |
| 92180H | 92180-1030 | SHIM,T=2.90 | | AR | AR | AR | AR | |
| 92180I | 92180-1032 | SHIM,T=2.95 | | AR | AR | AR | AR | |
| 92180J | 92180-1034 | SHIM,T=3.00 | | AR | AR | AR | AR | |
| 92180K | 92180-1036 | SHIM,T=3.05 | | AR | AR | AR | AR | |
| 92180L | 92180-1038 | SHIM,T=3.10 | | AR | AR | AR | AR | |
| 92180M | 92180-1040 | SHIM,T=3.15 | | AR | AR | AR | AR | |
| 92180N | 92180-1042 | SHIM,T=3.20 | | AR | AR | AR | AR | |
| 92180O | 92180-1044 | SHIM,T=3.25 | | AR | AR | AR | AR | |
| 92180P | 92180-1046 | SHIM,T=3.30 | | AR | AR | AR | AR | |
| 92180Q | 92180-1048 | SHIM,T=3.35 | | AR | AR | AR | AR | |
| 92180R | 92180-1050 | SHIM,T=3.40 | | AR | AR | AR | AR | |
| 92180S | 92180-1052 | SHIM,T=3.45 | | AR | AR | AR | AR | |
| 92180T | 92180-1054 | SHIM,T=3.50 | | AR | AR | AR | AR | |

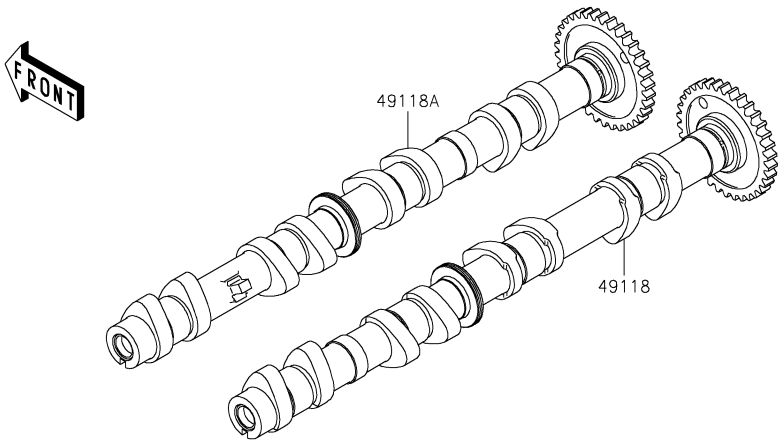


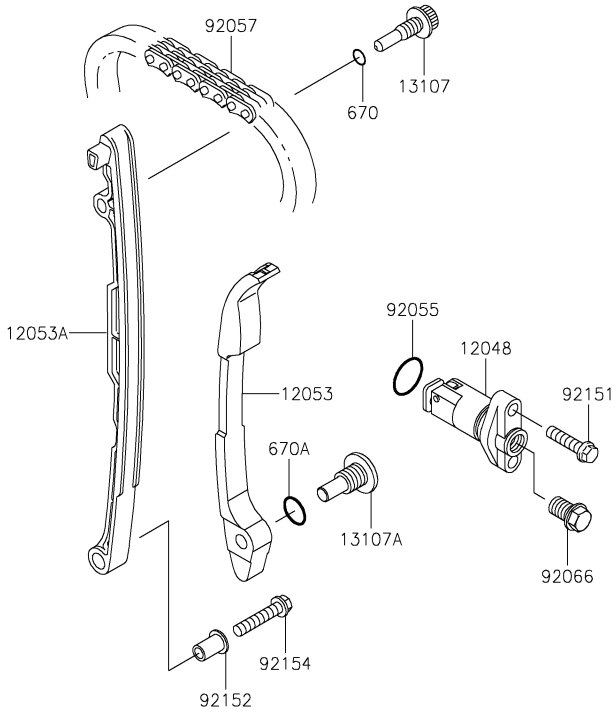


| Ref. No. | Part No. | Description | Spec Code | Quantity-ZR800 '13 ADS | '14 AEF | '15 AFF | '16 AGF | |
|---|---|---|---|---|---|---|---|---|
| 12048 | 12048-0035 | TENSIONER-ASSY | | 1 | 1 | 1 | 1 | |
| 12053 | 12053-1399 | GUIDE-CHAIN,RR | | 1 | 1 | 1 | 1 | |
| 12053A | 12053-1478 | GUIDE-CHAIN,FR | | 1 | 1 | 1 | 1 | |
| 13107 | 13107-0157 | SHAFT,CHAIN GUIDE | | 1 | 1 | 1 | 1 | |
| 13107A | 13107-0745 | SHAFT,CHAIN GUIDE | | 1 | 1 | 1 | 1 | |
| 49118 | 49118-0760 | CAMSHAFT-COMP,INTAKE | | 1 | 1 | 1 | 1 | |
| 49118A | 49118-0761 | CAMSHAFT-COMP,EXHAUST | | 1 | 1 | 1 | 1 | |
| 92055 | 92055-086 | RING-O,18.8X1.9 | | 1 | 1 | 1 | 1 | |
| 92057 | 92057-0602 | CHAIN,CAM,92RH2015 126M | | 1 | 1 | 1 | 1 | |
| 92066 | 92066-0738 | PLUG | | 1 | 1 | 1 | 1 | |
| 92151 | 92151-1930 | BOLT,FLANGED-SMALL,6X25 | | 2 | 2 | 2 | 2 | |
| 92152 | 92152-1167 | COLLAR | | 1 | 1 | 1 | 1 | |
| 92154 | 92154-1080 | BOLT,FLANGED,6X30 | | 1 | 1 | 1 | 1 | |
| 670 | 670D1509 | O RING,9MM | | 1 | 1 | 1 | 1 | |
| 670A | 670D2014 | O RING,14MM | | 1 | 1 | 1 | 1 | |

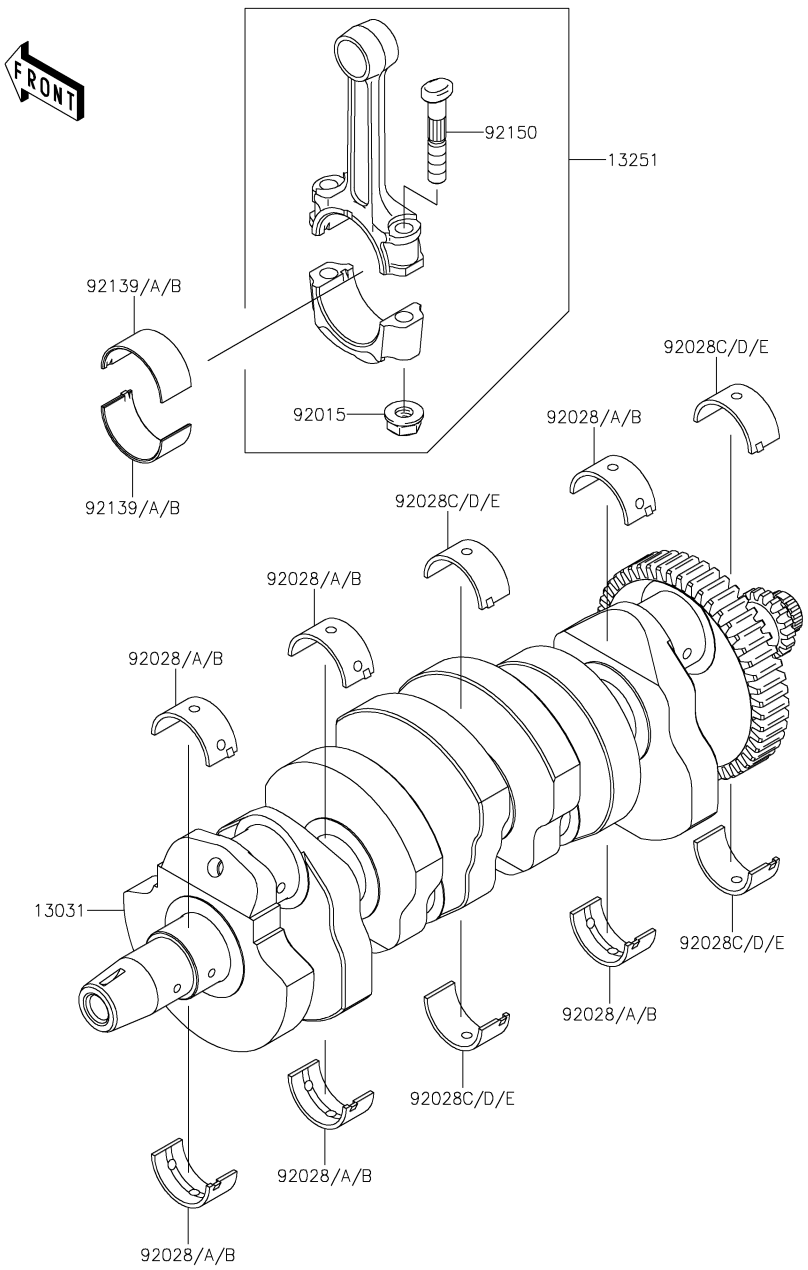


| Ref. No. | Part No. | Description | Spec Code | Quantity-ZR800 '13 ADS | '14 AEF | '15 AFF | '16 AGF | |
|---|---|---|---|---|---|---|---|---|
| 13031 | 13031-0763 | CRANKSHAFT-COMP | | 1 | 1 | 1 | 1 | |
| 13251 | 13251-1145-II | ROD-ASSY-CONNECTING,II | | 4 | 4 | 4 | 4 | |
| 92015 | 92015-1311 | NUT,FLANGED,8MM | | 8 | 8 | 8 | 8 | |
| 92028 | 92028-1827 | BUSHING,CRANK,BLUE | | 6 | 6 | 6 | 6 | |
| 92028A | 92028-1828 | BUSHING,CRANK,BLACK | | AR | AR | AR | AR | |
| 92028B | 92028-1829 | BUSHING,CRANK,BROWN | | AR | AR | AR | AR | |
| 92028C | 92028-1866 | BUSHING,CRANK,BLUE | | 4 | 4 | 4 | 4 | |
| 92028D | 92028-1867 | BUSHING,CRANK,BLACK | | AR | AR | AR | AR | |
| 92028E | 92028-1868 | BUSHING,CRANK,BROWN | | AR | AR | AR | AR | |
| 92139 | 92139-1108 | BUSHING,CONNECTING ROD,BLUE | | 8 | 8 | 8 | 8 | |
| 92139A | 92139-1109 | BUSHING,CONNECTING ROD,BLACK | | AR | AR | AR | AR | |
| 92139B | 92139-1110 | BUSHING,CONNECTING ROD,BROWN | | AR | AR | AR | AR | |
| 92150 | 92150-1216 | BOLT,CONNECTING ROD,8MM | | 8 | 8 | 8 | 8 | |

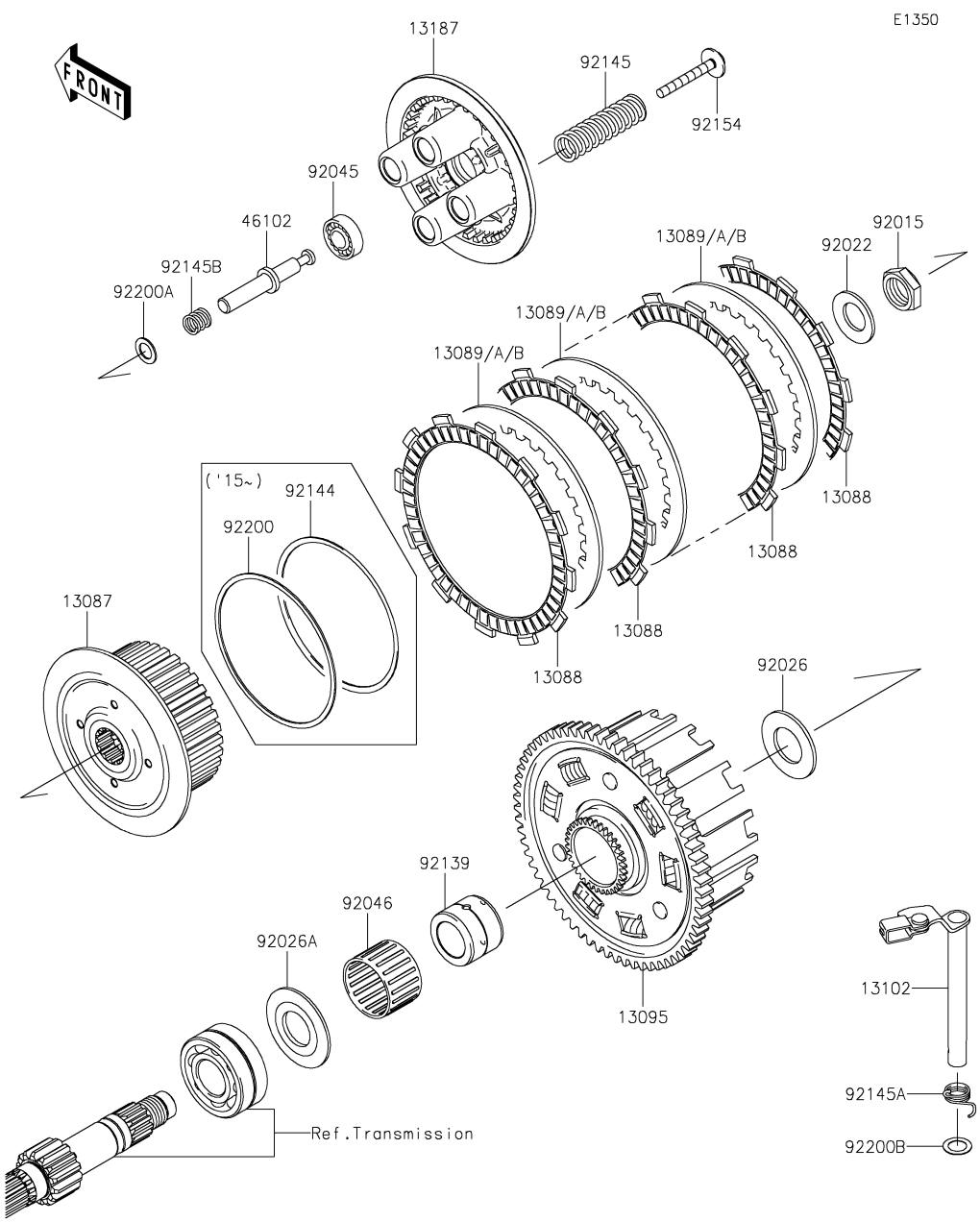


| Ref. No. | Part No. | Description | Spec Code | Quantity-ZR800 '13 ADS | '14 AEF | '15 AFF | '16 AGF | |
|---|---|---|---|---|---|---|---|---|
| 13087 | 13087-0006 | HUB-CLUTCH | | 1 | 1 | 1 | 1 | |
| 13088 | 13088-1124 | PLATE-FRICTION | | 9 | 9 | 9 | 9 | |
| 13089 | 13089-013 | PLATE-CLUTCH,T=1.6 | | 8 | 8 | 8 | 8 | |
| 13089A | 13089-1073 | PLATE-CLUTCH,T=2.0 | | AR | AR | AR | AR | |
| 13089B | 13089-1126 | PLATE-CLUTCH,T=1.4 | | AR | AR | AR | AR | |
| 13095 | 13095-0070 | HOUSING-COMP-CLUTCH | | 1 | 1 | 1 | 1 | |
| 13102 | 13102-0043 | RELEASE-COMP-CLUTCH | | 1 | 1 | 1 | 1 | |
| 13187 | 13187-0003 | PLATE-CLUTCH OPERATING | | 1 | 1 | 1 | 1 | |
| 46102 | 46102-0567 | ROD | | 1 | 1 | 1 | 1 | |
| 92015 | 92015-1555 | NUT,20MM | | 1 | 1 | 1 | 1 | |
| 92022 | 92022-1868 | WASHER,20.3X36X3.7 | | 1 | 1 | 1 | 1 | |
| 92026 | 92026-022 | SPACER,25.5X47X2.5 | | 1 | 1 | 1 | 1 | |
| 92026A | 92026-1497 | SPACER | | 1 | 1 | 1 | 1 | |
| 92045 | 92045-0742 | BEARING-BALL,6001C3 | | 1 | 1 | 1 | 1 | |
| 92046 | 92046-1263 | BEARING-NEEDLE,K38X43X28.8X | | 1 | 1 | 1 | 1 | |
| 92139 | 92139-0776 | BUSHING,25X38X29.05 | | 1 | 1 | 1 | 1 | |
| 92144 | 92144-1854 | SPRING,FRICTION PLATE | | | | 1 | 1 | |
| 92145 | 92145-0675 | SPRING | | 4 | 4 | 4 | 4 | |
| 92145A | 92145-0897 | SPRING,CLUTCH RELEASE | | 1 | 1 | 1 | 1 | |
| 92145B | 92145-1159 | SPRING,ROD | | 1 | 1 | 1 | 1 | |
| 92154 | 92154-0352 | BOLT,CLUTCH OPERATING | | 4 | 4 | 4 | 4 | |
| 92200 | 92200-1260 | WASHER,FRICTION PLATE | | | | 1 | 1 | |
| 92200A | 92200-1423 | WASHER,11.2X18X0.5 | | 1 | 1 | 1 | 1 | |
| 92200B | 92200-1487 | WASHER,12X18.5X0.5 | | 1 | 1 | 1 | 1 | |

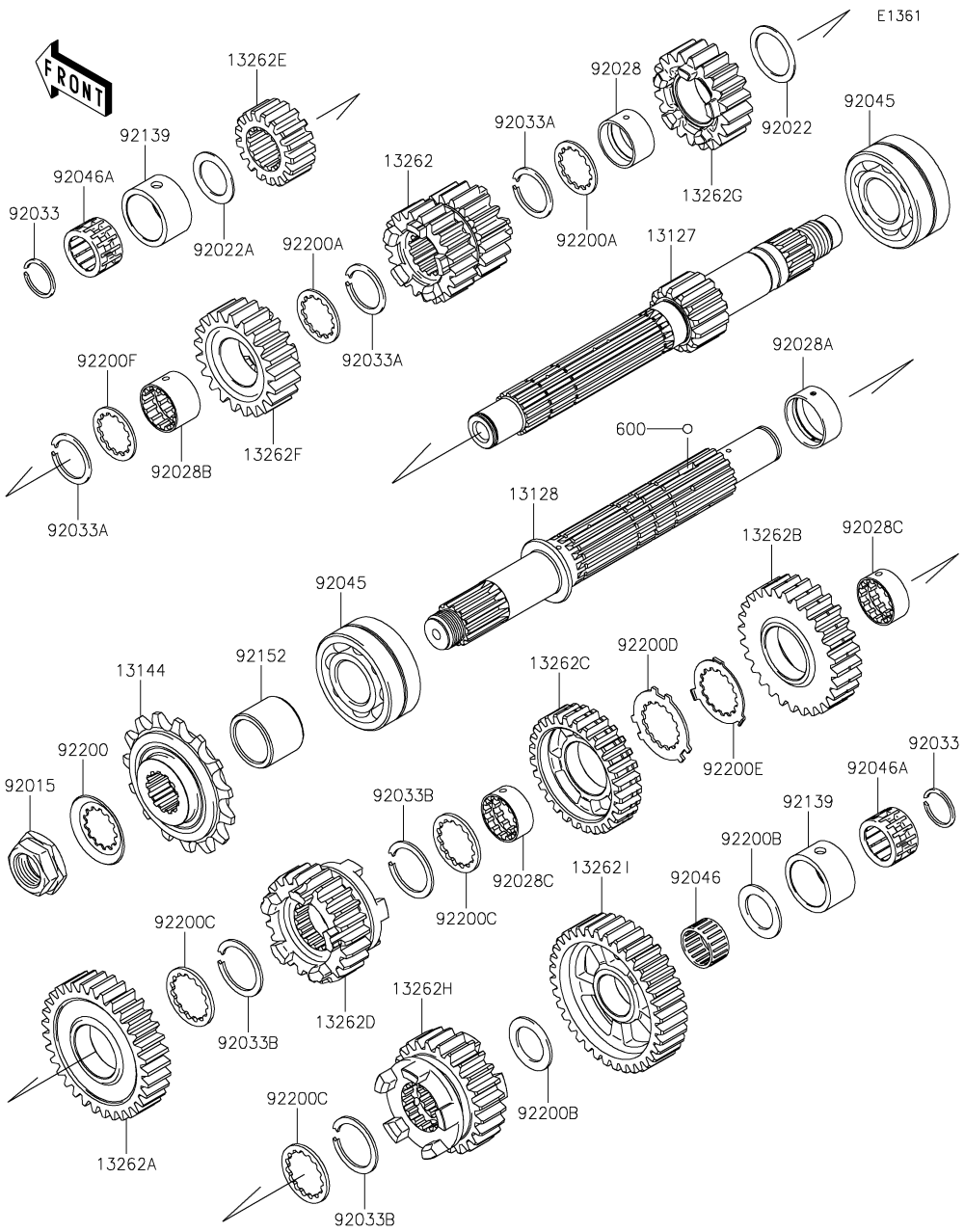


| Ref. No. | Part No. | Description | Spec Code | Quantity-ZR800 '13 ADS | '14 AEF | '15 AFF | '16 AGF | |
|---|---|---|---|---|---|---|---|---|
| 13127 | 13127-0651 | SHAFT-TRANSMISSION INPUT,14T | | 1 | 1 | 1 | 1 | |
| 13128 | 13128-0005 | SHAFT-TRANSMISSION OUTPUT | | 1 | 1 | 1 | 1 | |
| 13144 | 13144-0558 | SPROCKET-OUTPUT,15T | | 1 | 1 | 1 | 1 | |
| 13262 | 13262-0065 | GEAR,INPUT 3RD&4TH,18T&21T | | 1 | 1 | 1 | 1 | |
| 13262A | 13262-0069 | GEAR,OUTPUT 2ND,33T | | 1 | 1 | 1 | 1 | |
| 13262B | 13262-0070 | GEAR,OUTPUT 3RD,28T | | 1 | 1 | 1 | 1 | |
| 13262C | 13262-0162 | GEAR,OUTPUT 4TH,28T | | 1 | 1 | 1 | 1 | |
| 13262D | 13262-0551 | GEAR,OUTPUT TOP,23T | | 1 | 1 | 1 | 1 | |
| 13262E | 13262-0733 | GEAR,INPUT 2ND,17T | | 1 | 1 | 1 | 1 | |
| 13262F | 13262-0734 | GEAR,INPUT TOP,21T | | 1 | 1 | 1 | 1 | |
| 13262G | 13262-0938 | GEAR,INPUT 5TH,20T | | 1 | 1 | 1 | 1 | |
| 13262H | 13262-0939 | GEAR,OUTPUT 5TH,24T | | 1 | 1 | 1 | 1 | |
| 13262I | 13262-0952 | GEAR,OUTPUT LOW,36T | | 1 | 1 | 1 | 1 | |
| 92015 | 92015-1963 | NUT,20MM | | 1 | 1 | 1 | 1 | |
| 92022 | 92022-1109 | WASHER,25.3X33X1 | | 1 | 1 | 1 | 1 | |
| 92022A | 92022-112 | WASHER,20.5X30X1,STEEL | | 1 | 1 | 1 | 1 | |
| 92028 | 92028-1735 | BUSHING,INPUT 5TH GEAR | | 1 | 1 | 1 | 1 | |
| 92028A | 92028-1739 | BUSHING,OUTPUT,2ND | | 1 | 1 | 1 | 1 | |
| 92028B | 92028-1915 | BUSHING,INPUT TOP GEAR | | 1 | 1 | 1 | 1 | |
| 92028C | 92028-1968 | BUSHING,OUTPUT,3RD&4TH | | 2 | 2 | 2 | 2 | |
| 92033 | 92033-015 | RING-SNAP,20MM | | 2 | 2 | 2 | 2 | |
| 92033A | 92033-026 | RING-SNAP,24MM | | 3 | 3 | 3 | 3 | |
| 92033B | 92033-1249 | RING-SNAP,T=1.5 | | 3 | 3 | 3 | 3 | |
| 92045 | 92045-0003 | BEARING-BALL,DAC2557NSSH | | 2 | 2 | 2 | 2 | |
| 92046 | 92046-1219 | BEARING-NEEDLE,K20X24X13 | | 1 | 1 | 1 | 1 | |
| 92046A | 92046-1303 | BEARING-NEEDLE,PK20X27X17X3 | | 2 | 2 | 2 | 2 | |
| 92139 | 92139-1090 | BUSHING,27X34X18.6 | | 2 | 2 | 2 | 2 | |
| 92152 | 92152-1617 | COLLAR,25X32X24.6 | | 1 | 1 | 1 | 1 | |
| 92200 | 92200-0863 | WASHER | | 1 | 1 | 1 | 1 | |
| 92200A | 92200-1239 | WASHER,25.2X31.0X1.5 | | 2 | 2 | 2 | 2 | |
| 92200B | 92200-1375 | WASHER,20.5X31X1.5 | | 2 | 2 | 2 | 2 | |
| 92200C | 92200-1457 | WASHER,T=2.0 | | 3 | 3 | 3 | 3 | |
| 92200D | 92200-1522 | WASHER,25.8X40.5X1.5 | | 1 | 1 | 1 | 1 | |
| 92200E | 92200-1523 | WASHER,25.2X37.0X1.0 | | 1 | 1 | 1 | 1 | |
| 92200F | 92200-1524 | WASHER,INPUT | | 1 | 1 | 1 | 1 | |
| 600 | 600A0500 | BALL-STEEL,5/32 | | 3 | 3 | 3 | 3 | |

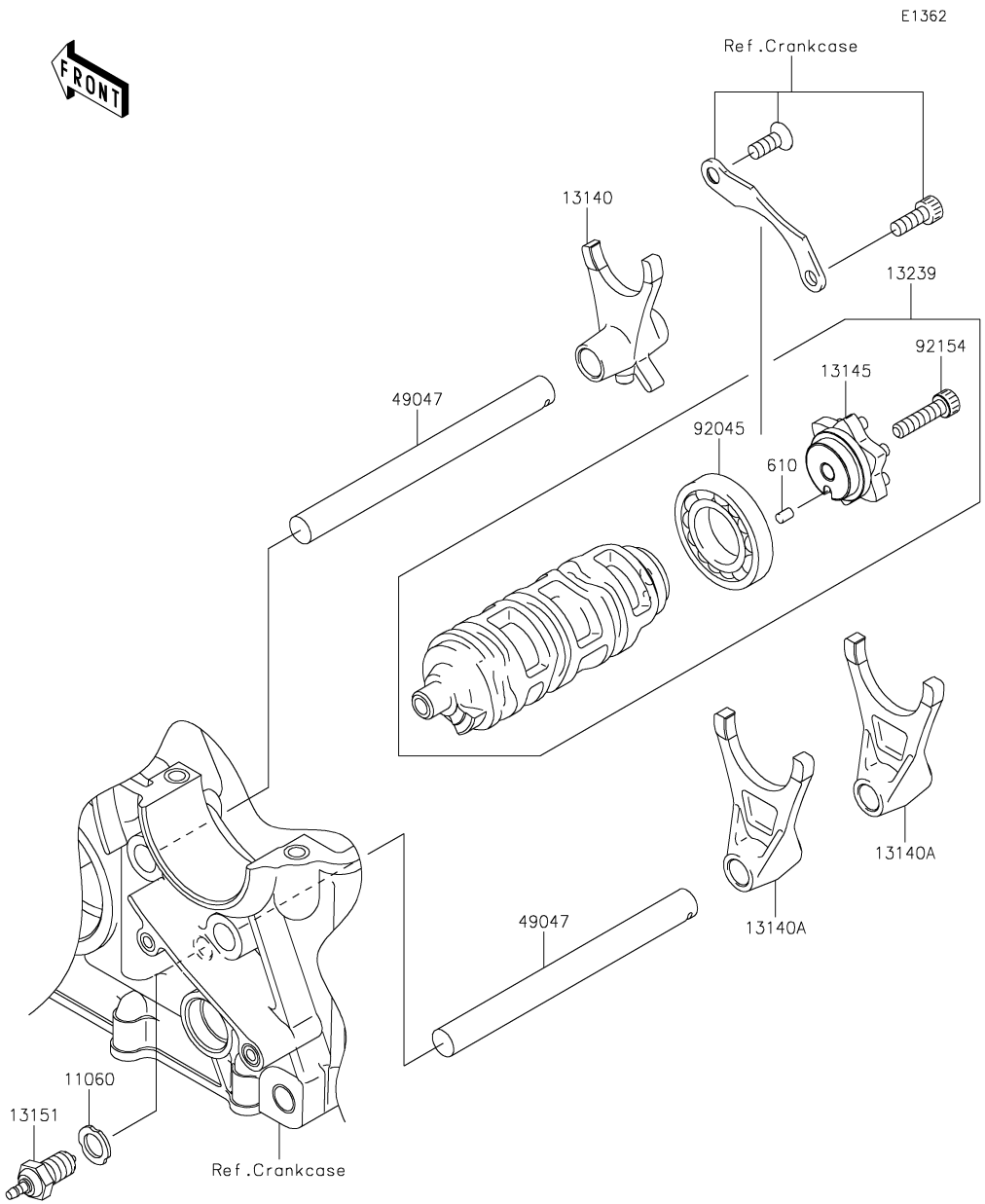


| Ref. No. | Part No. | Description | Spec Code | Quantity-ZR800 '13 ADS | '14 AEF | '15 AFF | '16 AGF | |
|---|---|---|---|---|---|---|---|---|
| 11060 | 11060-1676 | GASKET,10.5X16X1.5 | | 1 | 1 | 1 | 1 | |
| 13140 | 13140-0624 | FORK-SHIFT | | 1 | 1 | 1 | 1 | |
| 13140A | 13140-1266 | FORK-SHIFT,OUTPUT | | 2 | 2 | 2 | 2 | |
| 13145 | 13145-0557 | CAM-CHANGE DRUM | | 1 | 1 | 1 | 1 | |
| 13151 | 13151-0559 | SWITCH-COMP | | 1 | 1 | 1 | 1 | |
| 13239 | 13239-0563 | DRUM-ASSY-CHANGE | | 1 | 1 | 1 | 1 | |
| 49047 | 49047-0010 | ROD-SHIFT | | 2 | 2 | 2 | 2 | |
| 92045 | 92045-1045 | BEARING-BALL,16005 | | 1 | 1 | 1 | 1 | |
| 92154 | 92154-0477 | BOLT,SOCKET,6X25 | | 1 | 1 | 1 | 1 | |
| 610 | 610A0406 | ROLLER,4X6 | | 1 | 1 | 1 | 1 | |

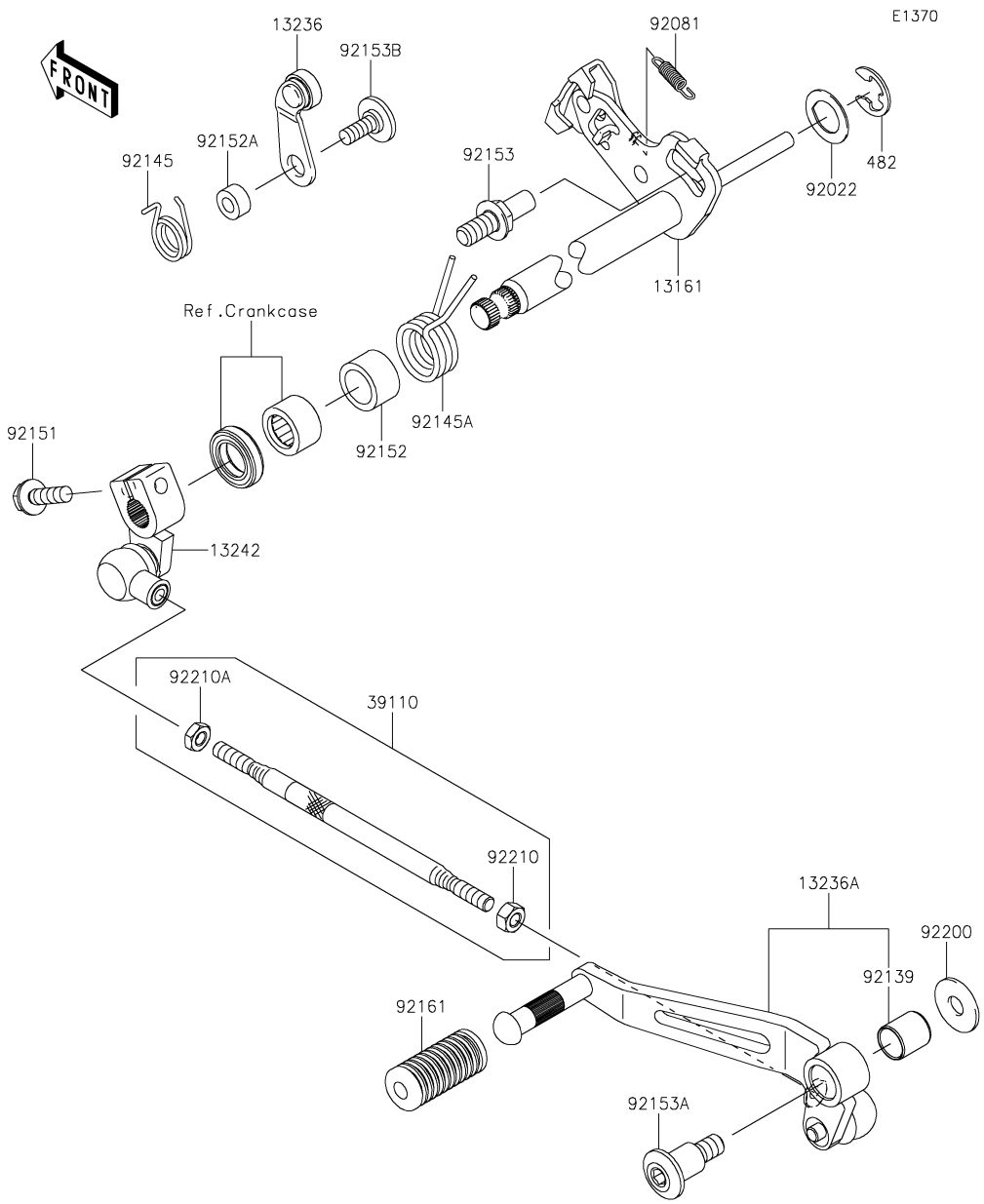


| Ref. No. | Part No. | Description | Spec Code | Quantity-ZR800 '13 ADS | '14 AEF | '15 AFF | '16 AGF | |
|---|---|---|---|---|---|---|---|---|
| 13161 | 13161-0561 | LEVER-COMP-CHANGE SHAFT | | 1 | 1 | 1 | 1 | |
| 13236 | 13236-0106 | LEVER-COMP,POSITION | | 1 | 1 | 1 | 1 | |
| 13236A | 13236-0732 | LEVER-COMP,CHANGE PEDAL | | 1 | 1 | 1 | 1 | |
| 13242 | 13242-0090 | LEVER-ASSY-CHANGE | | 1 | 1 | 1 | 1 | |
| 39110 | 39110-0033 | ROD-ASSY-TIE | | 1 | 1 | 1 | 1 | |
| 92022 | 92022-1628 | WASHER,CHANGE SHAFT | | 1 | 1 | 1 | 1 | |
| 92081 | 92081-1708 | SPRING,PAWL RETURN | | 1 | 1 | 1 | 1 | |
| 92139 | 92139-0023 | BUSHING | | 1 | 1 | 1 | 1 | |
| 92145 | 92145-0944 | SPRING,GEAR POSITION | | 1 | 1 | 1 | 1 | |
| 92145A | 92145-1122 | SPRING | | 1 | 1 | 1 | 1 | |
| 92151 | 92151-1226 | BOLT,FLANGED,6X20 | | 1 | 1 | 1 | 1 | |
| 92152 | 92152-1587 | COLLAR,14.2X19.9X12 | | 1 | 1 | 1 | 1 | |
| 92152A | 92152-1588 | COLLAR,6.1X12X6 | | 1 | 1 | 1 | 1 | |
| 92153 | 92153-0421 | BOLT,RETURN SPRING | | 1 | 1 | 1 | 1 | |
| 92153A | 92153-0446 | BOLT,SOCKET,8X16.7 | | 1 | 1 | 1 | 1 | |
| 92153B | 92153-1505 | BOLT,6X20 | | 1 | 1 | 1 | 1 | |
| 92161 | 92161-1466 | DAMPER,CHANGE PEDAL | | 1 | 1 | 1 | 1 | |
| 92200 | 92200-0174 | WASHER,8.0X22.0X1.5 | | 1 | 1 | 1 | 1 | |
| 92210 | 92210-1100 | NUT,6MM | | 1 | 1 | 1 | 1 | |
| 92210A | 92210-1101 | NUT,LEFT HANDED,6MM | | 1 | 1 | 1 | 1 | |
| 482 | 482J0200 | CIRCLIP-TYPE-E,12MM | | 1 | 1 | 1 | 1 | |

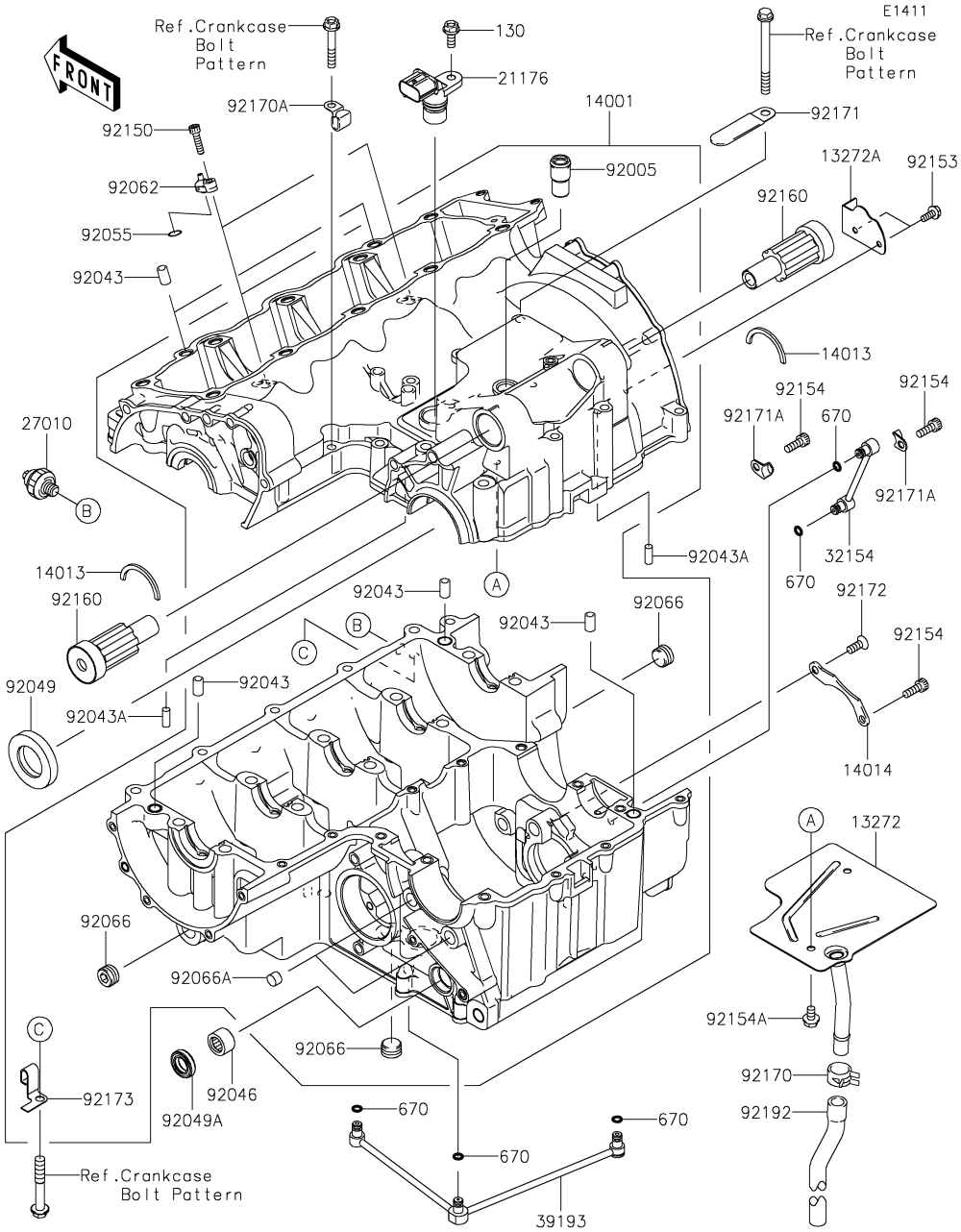


| Ref. No. | Part No. | Description | Spec Code | Quantity-ZR800 '13 ADS | '14 AEF | '15 AFF | '16 AGF | |
|---|---|---|---|---|---|---|---|---|
| 13272 | 13272-1254 | PLATE,BREATHER UPPER | | 1 | 1 | 1 | 1 | |
| 13272A | 13272-1255 | PLATE,BREATHER SIDE | | 1 | 1 | 1 | 1 | |
| 14001 | 14001-0616 | SET-CRANKCASE | | 1 | 1 | 1 | 1 | |
| 14013 | 14013-1051 | RING-POSITION | | 2 | 2 | 2 | 2 | |
| 14014 | 14014-0563 | PLATE-POSITION | | 1 | 1 | 1 | 1 | |
| 21176 | 21176-0054 | SENSOR,SPEED | | 1 | 1 | 1 | 1 | |
| 27010 | 27010-1313 | SWITCH,OIL PRESSURE | | 1 | 1 | 1 | 1 | |
| 32154 | 32154-1493 | PIPE,RH | | 1 | 1 | 1 | 1 | |
| 39193 | 39193-0014 | PIPE-OIL | | 1 | 1 | 1 | 1 | |
| 92005 | 92005-0713 | FITTING,BREATHER | | 1 | 1 | 1 | 1 | |
| 92043 | 92043-1037 | PIN,DOWEL,10X14 | | 5 | 5 | 5 | 5 | |
| 92043A | 92043-1690 | PIN,6X16 | | 2 | 2 | 2 | 2 | |
| 92046 | 92046-0043 | BEARING-NEEDLE,HK1412FM | | 1 | 1 | 1 | 1 | |
| 92049 | 92049-1474 | SEAL-OIL,TC32578 | | 1 | 1 | 1 | 1 | |
| 92049A | 92049-1520 | SEAL-OIL,TC14245 | | 1 | 1 | 1 | 1 | |
| 92055 | 92055-1343 | RING-O,5.5X1.5 | | 2 | 2 | 2 | 2 | |
| 92062 | 92062-0022 | NOZZLE,OIL JET | | 2 | 2 | 2 | 2 | |
| 92066 | 92066-0003 | PLUG,PT3/8X10 | | 3 | 3 | 3 | 3 | |
| 92066A | 92066-1110 | PLUG | | 2 | 2 | 2 | 2 | |
| 92150 | 92150-1019 | BOLT,SOCKET,5X20 | | 2 | 2 | 2 | 2 | |
| 92153 | 92153-0753 | BOLT,FLANGED,5X12 | | 2 | 2 | 2 | 2 | |
| 92154 | 92154-0235 | BOLT,SOCKET,6X16 | | 3 | 3 | 3 | 3 | |
| 92154A | 92154-0356 | BOLT,FLANGED,6X10 | | 2 | 2 | 2 | 2 | |
| 92160 | 92160-1868 | DAMPER | | 2 | 2 | 2 | 2 | |
| 92170 | 92170-1118 | CLAMP | | 1 | 1 | 1 | 1 | |
| 92170A | 92170-1577 | CLAMP | | 1 | 1 | 1 | 1 | |
| 92171 | 92171-0092 | CLAMP | | 1 | 1 | 1 | 1 | |
| 92171A | 92171-1595 | CLAMP,OIL PIPE | | 2 | 2 | 2 | 2 | |
| 92172 | 92172-0090 | SCREW,6X16 | | 1 | 1 | 1 | 1 | |
| 92173 | 92173-1034 | CLAMP | | 1 | 1 | 1 | 1 | |
| 92192 | 92192-1104 | TUBE,BREATHER | | 1 | 1 | 1 | 1 | |
| 130 | 130CC0616 | BOLT-FLANGED,6X16 | | 1 | 1 | 1 | 1 | |
| 670 | 670D1505 | O RING | | 5 | 5 | 5 | 5 | |

E1412

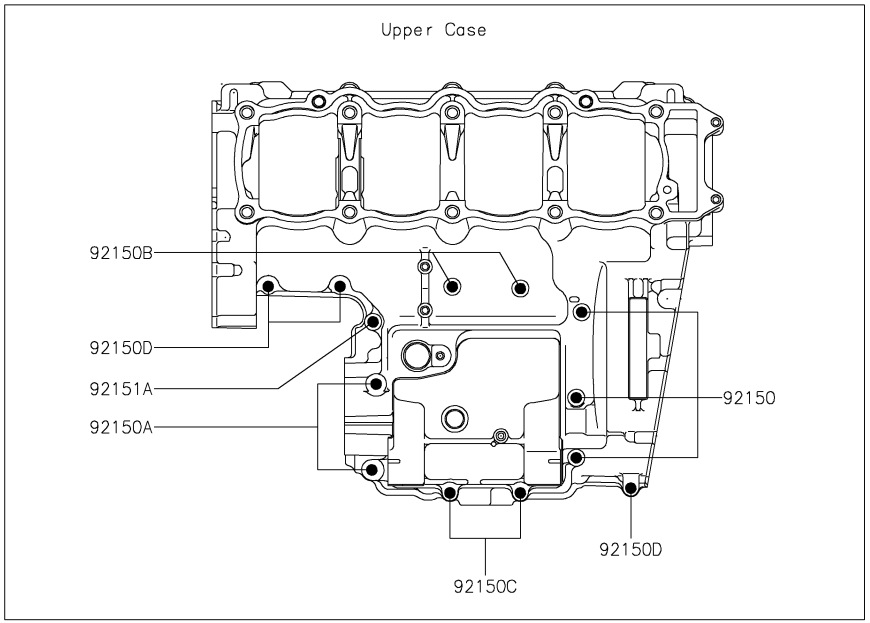


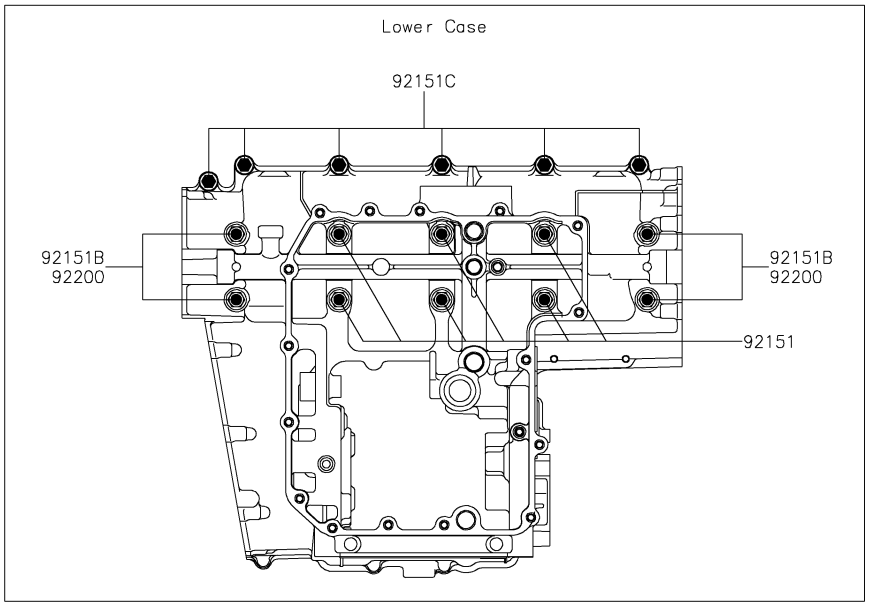


| Ref. No. | Part No. | Description | Spec Code | Quantity-ZR800 '13 ADS | '14 AEF | '15 AFF | '16 AGF | |
|---|---|---|---|---|---|---|---|---|
| 92150 | 92150-1251 | BOLT,FLANGED,7X85 | | 3 | 3 | 3 | 3 | |
| 92150A | 92150-1483 | BOLT,8X70 | | 2 | 2 | 2 | 2 | |
| 92150B | 92150-1548 | BOLT,6X60 | | 2 | 2 | 2 | 2 | |
| 92150C | 92150-1622 | BOLT,6X90 | | 2 | 2 | 2 | 2 | |
| 92150D | 92150-1794 | BOLT,6X40 | | 3 | 3 | 3 | 3 | |
| 92151 | 92151-1222 | BOLT,9X81 | | 6 | 6 | 6 | 6 | |
| 92151A | 92151-1223 | BOLT,FLANGED,7X50 | | 1 | 1 | 1 | 1 | |
| 92151B | 92151-1378 | BOLT,FLANGED,9X95 | | 4 | 4 | 4 | 4 | |
| 92151C | 92151-1539 | BOLT,FLANGED,7X45 | | 6 | 6 | 6 | 6 | |
| 92200 | 92200-0115 | WASHER,9.2X19X2.3 | | 4 | 4 | 4 | 4 | |

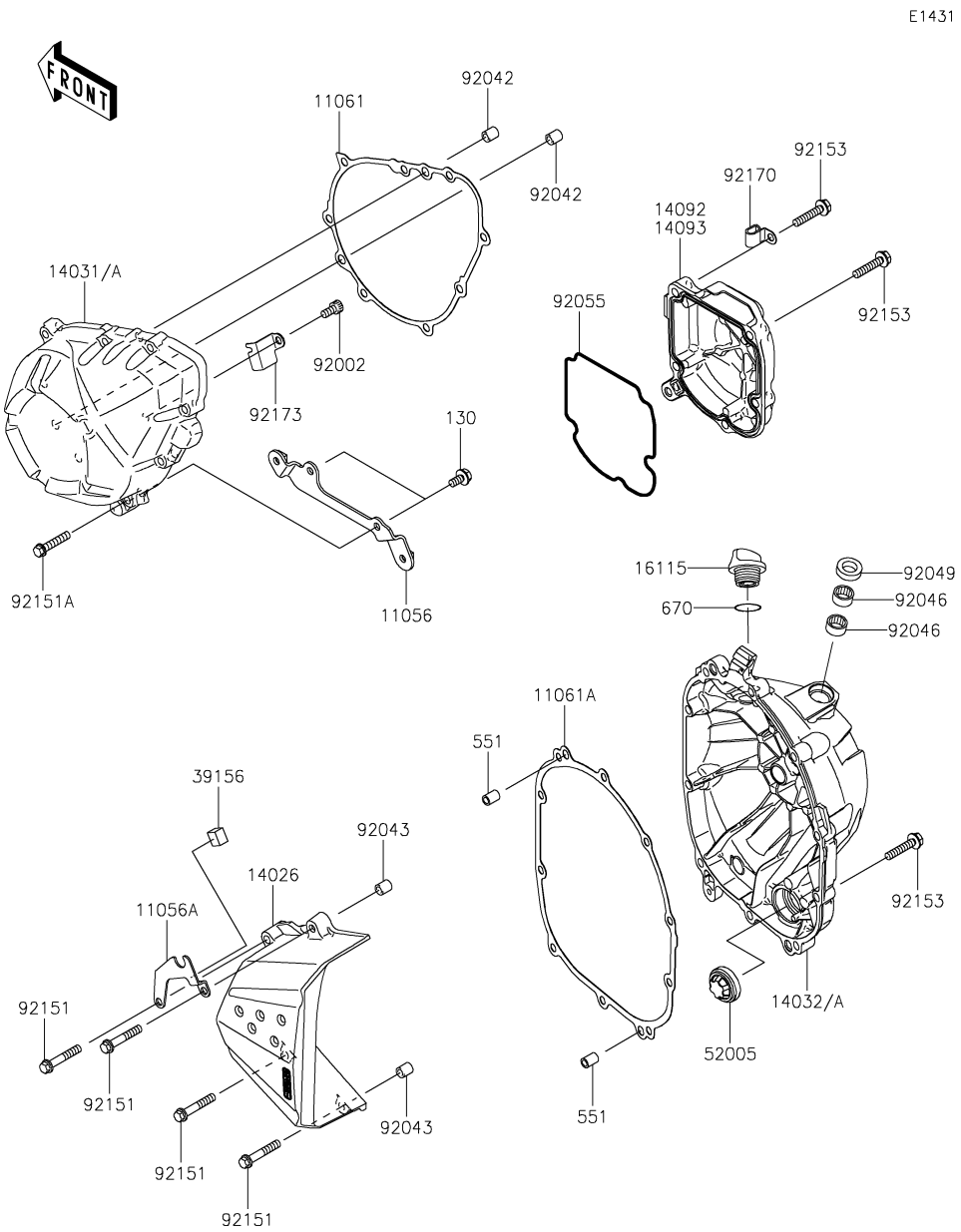


| Ref. No. | Part No. | Description | Spec Code | Quantity-ZR800 '13 ADS | '14 AEF | '15 AFF | '16 AGF | |
|---|---|---|---|---|---|---|---|---|
| 11056 | 11056-1755 | BRACKET,LWR COWLING | | 1 | 1 | 1 | 1 | |
| 11056A | 11056-2385 | BRACKET,THROTTLE ADJUST SCREW | | 1 | 1 | 1 | 1 | |
| 11061 | 11061-0787 | GASKET,GENERATOR | | 1 | 1 | 1 | 1 | |
| 11061A | 11061-0788 | GASKET,CLUTCH | | 1 | 1 | 1 | 1 | |
| 14026 | 14026-0102 | COVER-CHAIN | | 1 | 1 | 1 | 1 | |
| 14031 | 14031-0564 | COVER-GENERATOR | | 1 | 1 | 1 | | |
| 14031A | 14031-0602 | COVER-GENERATOR | | | | | 1 | |
| 14032 | 14032-0586 | COVER-CLUTCH | | 1 | 1 | 1 | | |
| 14032A | 14032-0620 | COVER-CLUTCH | | | | | 1 | |
| 14092 | 14092-0950 | COVER,PULSER | | 1 | 1 | 1 | | |
| 14093 | 14093-0378 | COVER,PULSER | | | | | 1 | |
| 16115 | 16115-1053 | CAP-OIL FILLER | | 1 | 1 | 1 | 1 | |
| 39156 | 39156-0992 | PAD,12X9X10 | | 1 | 1 | 1 | 1 | |
| 52005 | 52005-1120 | GAUGE | | 1 | 1 | 1 | 1 | |
| 92002 | 92002-1796 | BOLT,SOCKET,6X12 | | 1 | 1 | 1 | 1 | |
| 92042 | 92042-007 | PIN,DOWEL,6.3X8X14 | | 2 | 2 | 2 | 2 | |
| 92043 | 92043-1263 | PIN,6.2X8X14 | | 2 | 2 | 2 | 2 | |
| 92046 | 92046-0034 | BEARING-NEEDLE,HK1210FM | | 2 | 2 | 2 | 2 | |
| 92049 | 92049-1475 | SEAL-OIL,CLUTCH RELEASE | | 1 | 1 | 1 | 1 | |
| 92055 | 92055-1570 | RING-O,PULSE COVER | | 1 | 1 | 1 | 1 | |
| 92151 | 92151-1135 | BOLT,6X35 | | 4 | 4 | 4 | 4 | |
| 92151A | 92151-1873 | BOLT,6X30 | | 8 | 8 | 8 | 8 | |
| 92153 | 92153-1574 | BOLT,FLANGED,6X30 | | 15 | 15 | 15 | 15 | |
| 92170 | 92170-1577 | CLAMP | | 1 | 1 | 1 | 1 | |
| 92173 | 92173-0912 | CLAMP | | 1 | 1 | 1 | 1 | |
| 130 | 130CA0612 | BOLT-FLANGED,6X12 | | 2 | 2 | 2 | 2 | |
| 551 | 551A0814 | PIN-DOWEL,8X14 | | 2 | 2 | 2 | 2 | |
| 670 | 670B2020 | O RING,20MM | | 1 | 1 | 1 | 1 | |

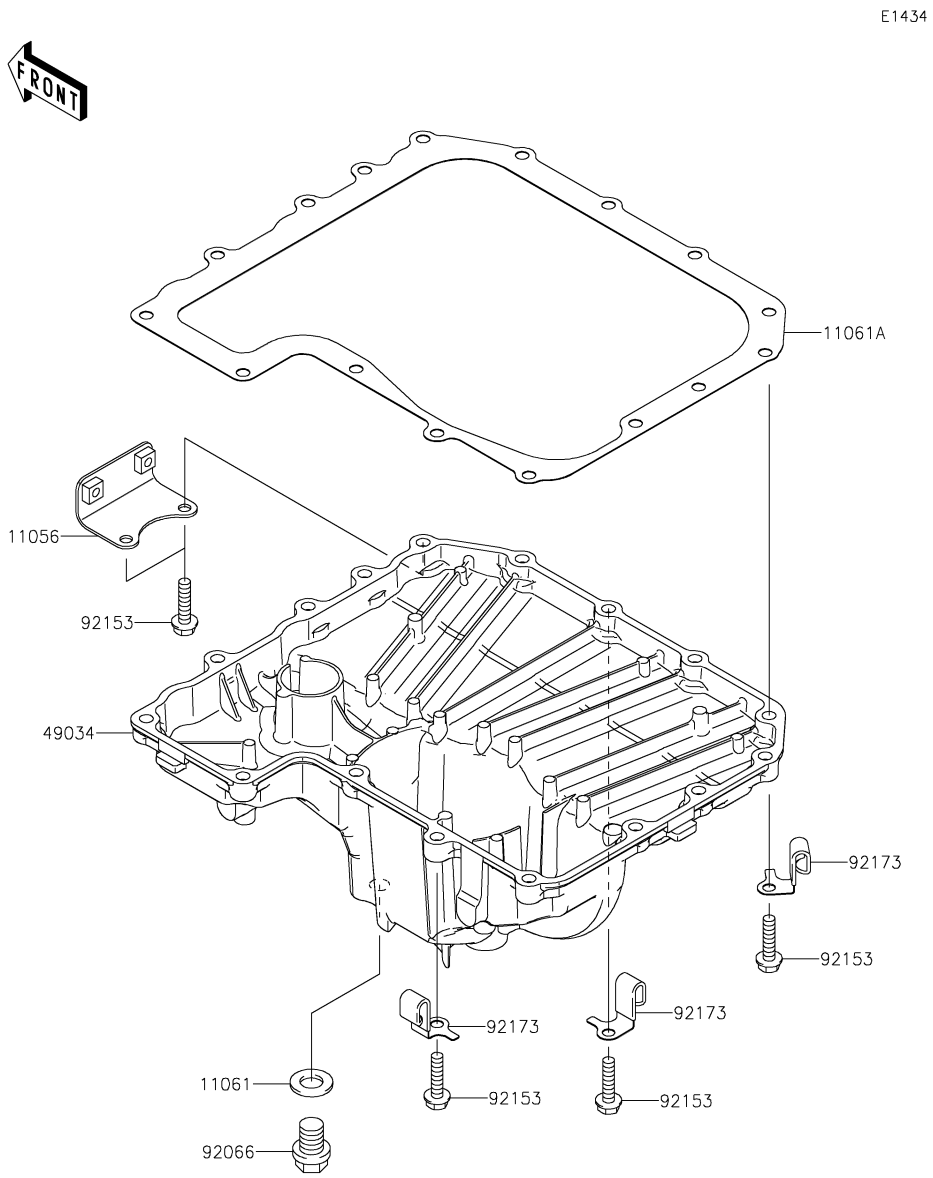


| Ref. No. | Part No. | Description | Spec Code | Quantity-ZR800 '13 ADS | '14 AEF | '15 AFF | '16 AGF | |
|---|---|---|---|---|---|---|---|---|
| 11056 | 11056-1756 | BRACKET,LWR COWLING | | 1 | 1 | 1 | 1 | |
| 11061 | 11061-0417 | GASKET,12X22X2 | | 1 | 1 | 1 | 1 | |
| 11061A | 11061-0789 | GASKET,OIL PAN | | 1 | 1 | 1 | 1 | |
| 49034 | 49034-0554 | PAN-OIL | | 1 | 1 | 1 | 1 | |
| 92066 | 92066-0767 | PLUG,OIL DRAIN,12X15 | | 1 | 1 | 1 | 1 | |
| 92153 | 92153-1569 | BOLT,FLANGED,6X25 | | 16 | 16 | 16 | 16 | |
| 92173 | 92173-1033 | CLAMP | | 3 | 3 | 3 | 3 | |

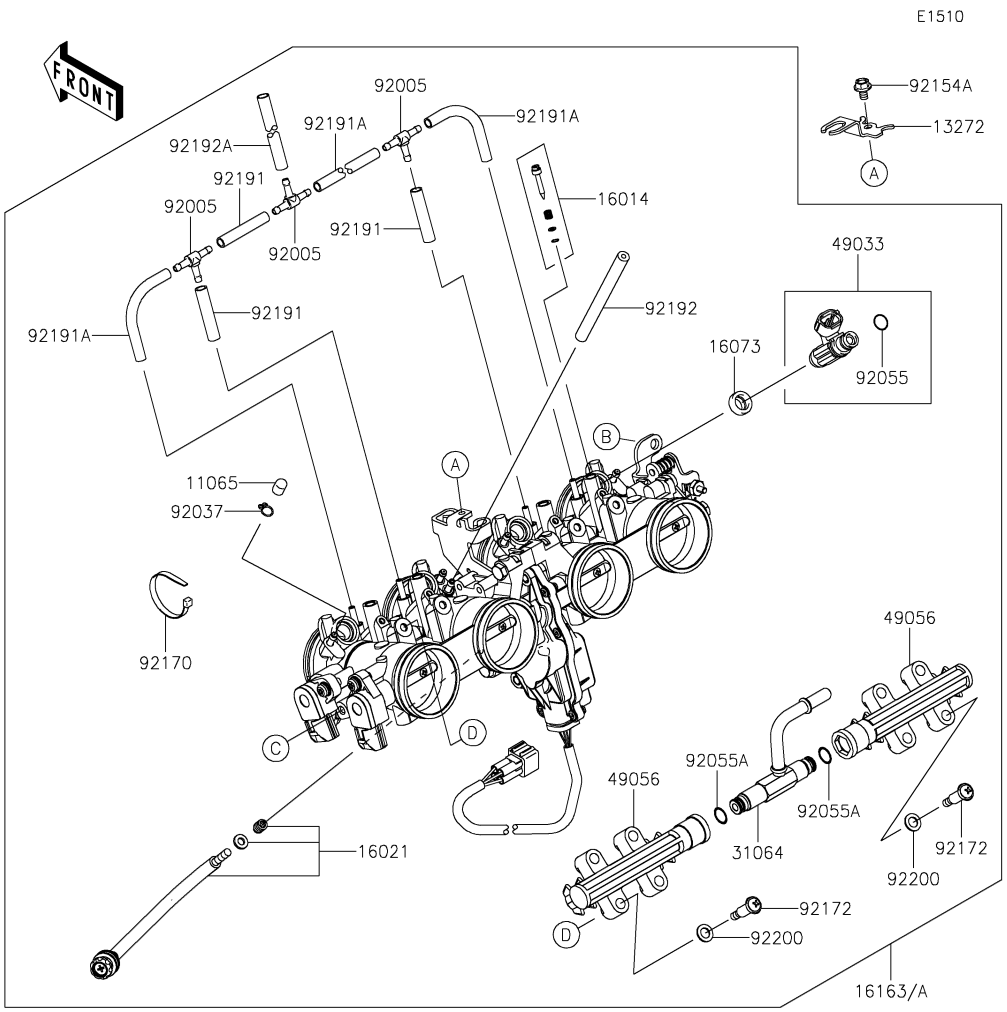


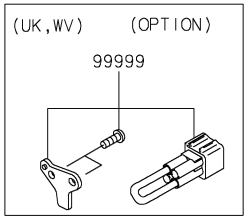


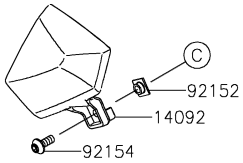


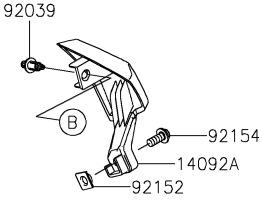


| Ref. No. | Part No. | Description | Spec Code | Quantity-ZR800 '13 ADS | '14 AEF | '15 AFF | '16 AGF | |
|---|---|---|---|---|---|---|---|---|
| 11065 | 11065-0072 | CAP | | 4 | 4 | 4 | 4 | |
| 13272 | 13272-1376 | PLATE,THROTTLE CABLE | | 1 | 1 | 1 | 1 | |
| 14092 | 14092-0952 | COVER,THROTTLE,LH | | 1 | 1 | 1 | 1 | |
| 14092A | 14092-0953 | COVER,THROTTLE,RH | | 1 | 1 | 1 | 1 | |
| 16014 | 16014-0017 | SCREW-PILOT AIR | | 4 | 4 | 4 | 4 | |
| 16021 | 16021-0029 | SCREW-THROTTLE STOP | | 1 | 1 | 1 | 1 | |
| 16073 | 16073-1123 | INSULATOR,INJECTER | | 4 | 4 | 4 | 4 | |
| 16163 | 16163-0798 | THROTTLE-ASSY | | | | | | |
| | L- | - - - - - - - - - - - - - - - - - - - - - - - - - - - - - - - - - - - - | UK,WV | 1 | 1 | 1 | 1 | |
| 16163A | 16163-0800 | THROTTLE-ASSY | | | | | | |
| | L- | - - - - - - - - - - - - - - - - - - - - - - - - - - - - - - - - - - - - | FR | 1 | 1 | 1 | 1 | |
| 31064 | 31064-0625 | PIPE-COMP,FUEL | | 1 | 1 | 1 | 1 | |
| 49033 | 49033-0029 | NOZZLE-INJECTION | | 4 | 4 | 4 | 4 | |
| 49056 | 49056-0037 | PIPE-INJECTION | | 2 | 2 | 2 | 2 | |
| 92005 | 92005-1380 | FITTING | | 3 | 3 | 3 | 3 | |
| 92037 | 92037-1124 | CLAMP,TUBE | | 4 | 4 | 4 | 4 | |
| 92039 | 92039-0023 | RIVET | | 1 | 1 | 1 | 1 | |
| 92055 | 92055-0124 | RING-O,INJECTION NOZZLE | | 4 | 4 | 4 | 4 | |
| 92055A | 92055-0761 | RING-O | | 2 | 2 | 2 | 2 | |
| 92152 | 92152-1709 | COLLAR | | 2 | 2 | 2 | 2 | |
| 92154 | 92154-0917 | BOLT,SOCKET,5X12 | | 2 | 2 | 2 | 2 | |
| 92154A | 92154-0964 | BOLT,FLANGED,5X8 | | 1 | 1 | 1 | 1 | |
| 92170 | 92170-3749 | CLAMP | | 1 | 1 | 1 | 1 | |
| 92172 | 92172-0828 | SCREW,PIPE INJECTION | | 4 | 4 | 4 | 4 | |
| 92191 | 92191-1551 | TUBE,3.2X7.4X40 | | 3 | 3 | 3 | 3 | |
| 92191A | 92191-1552 | TUBE,3.2X7.4X70 | | 3 | 3 | 3 | 3 | |
| 92192 | 92192-1265 | TUBE,3.2X7.4X90 | | 1 | 1 | 1 | 1 | |
| 92192A | 92192-1266 | TUBE,3.2X7.4X100 | | 1 | 1 | 1 | 1 | |
| 92200 | 92200-3807 | WASHER | | 4 | 4 | 4 | 4 | |
| 99999 | 99999-0345 | KIT.,72KW | | | | | | |
| | L- | - - - - - - - - - - - - - - - - - - - - - - - - - - - - - - - - - - - - | UK,WV | 1 | 1 | 1 | 1 | |
| | (OPTION) | | | | | | | |

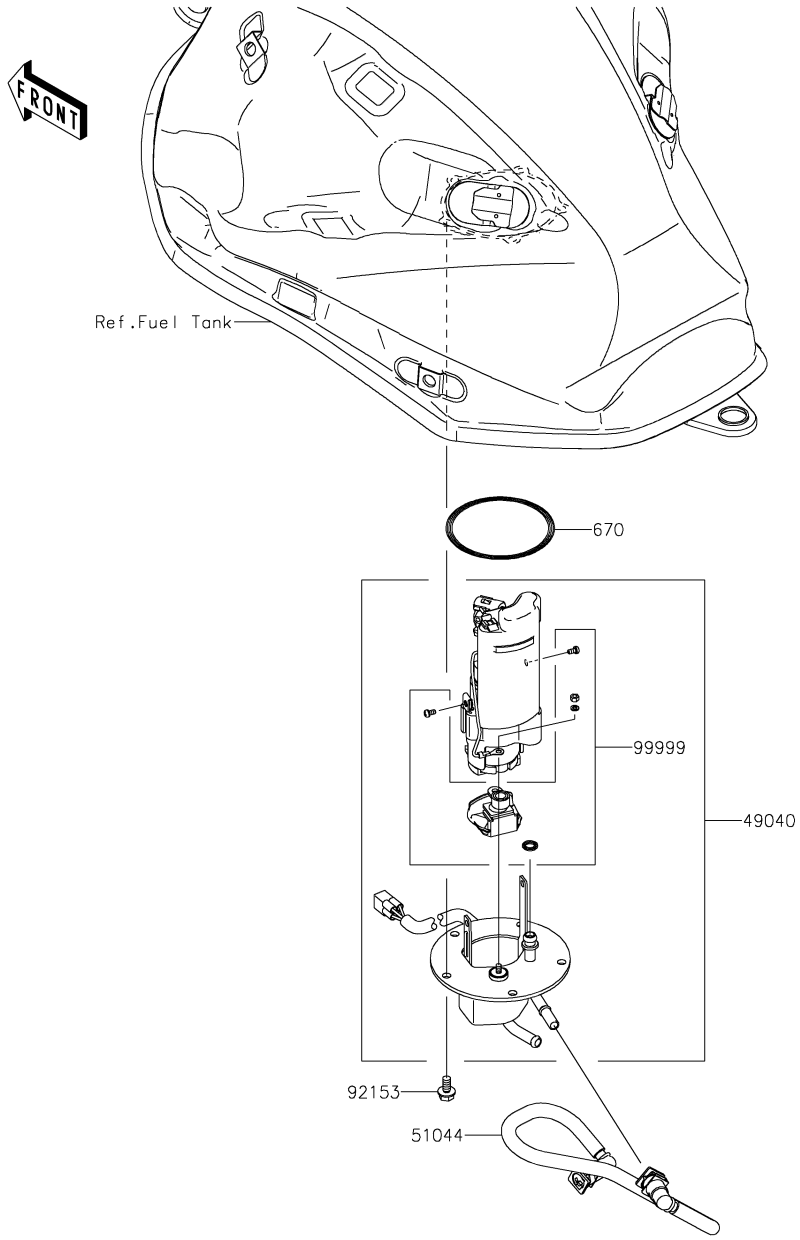


| Ref. No. | Part No. | Description | Spec Code | Quantity-ZR800 '13 ADS | '14 AEF | '15 AFF | '16 AGF | |
|---|---|---|---|---|---|---|---|---|
| 49040 | 49040-0724 | PUMP-FUEL | | 1 | 1 | 1 | 1 | |
| 51044 | 51044-0740 | TUBE-ASSY,FUEL | | 1 | 1 | 1 | 1 | |
| 92153 | 92153-1295 | BOLT,FLANGED,6X12 | | 5 | 5 | 5 | 5 | |
| 99999 | 99999-0523 | KIT,FUEL FILTER | | 1 | 1 | 1 | 1 | |
| 670 | 670E5075 | O RING | | 1 | 1 | 1 | 1 | |

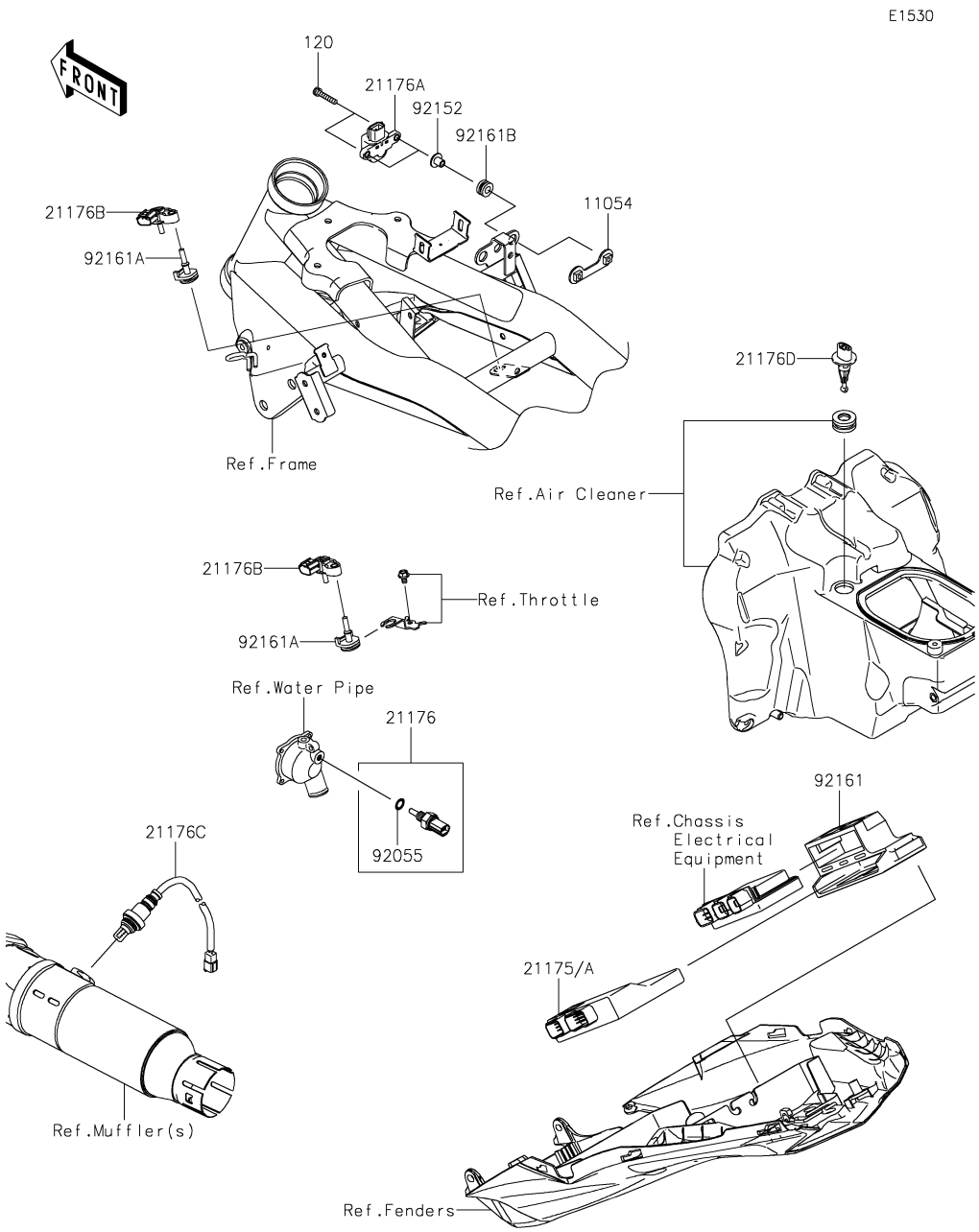


| Ref. No. | Part No. | Description | Spec Code | Quantity-ZR800 '13 ADS | '14 AEF | '15 AFF | '16 AGF | |
|---|---|---|---|---|---|---|---|---|
| 11054 | 11054-1892 | BRACKET | | 1 | 1 | 1 | 1 | |
| 21175 | 21175-0789 | CONTROL UNIT-ELECTRONIC | | | | | | |
| | L- - - -

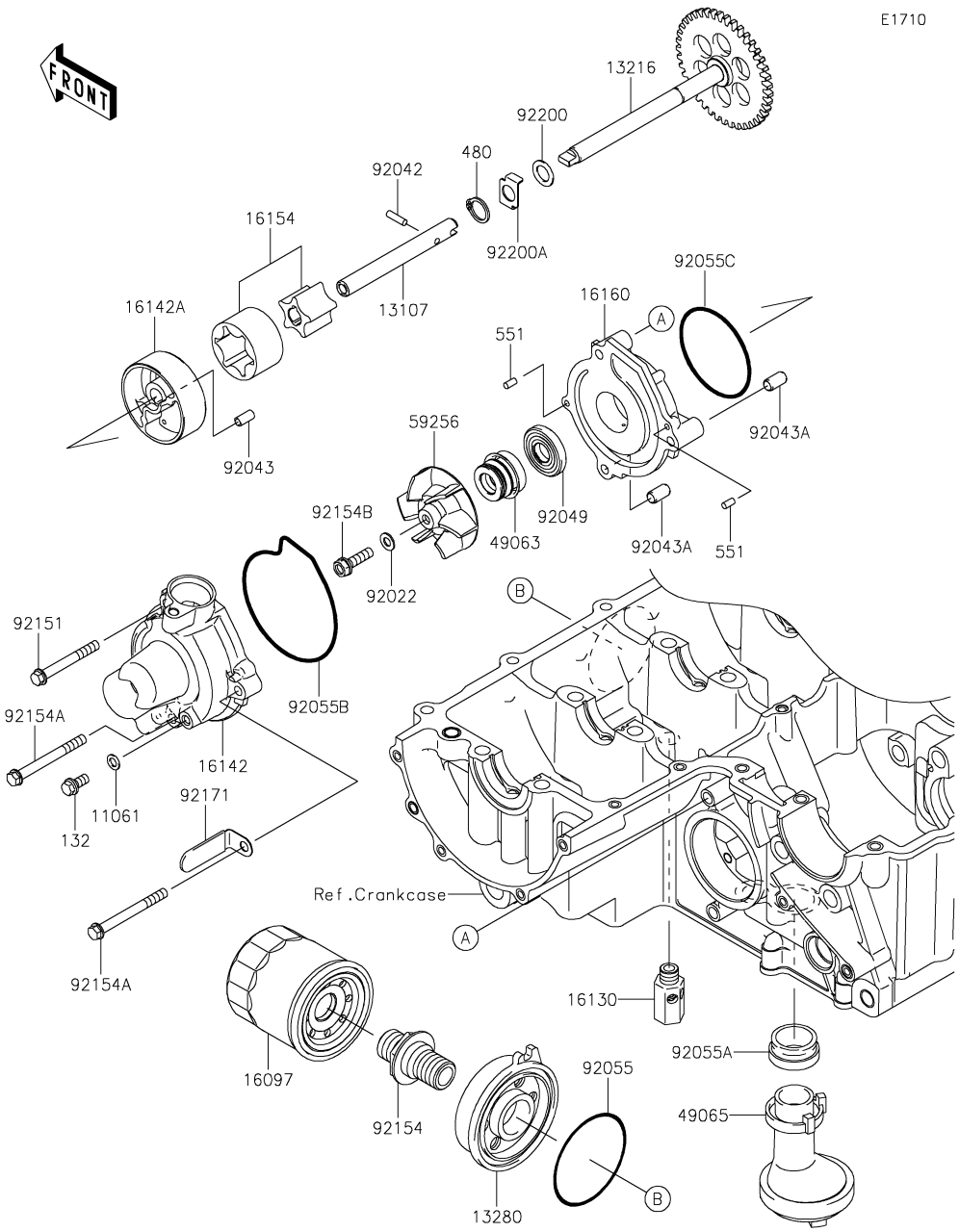


| Ref. No. | Part No. | Description | Spec Code | Quantity-ZR800 '13 ADS | '14 AEF | '15 AFF | '16 AGF | |
|---|---|---|---|---|---|---|---|---|
| 11061 | 11061-0107 | GASKET | | 1 | 1 | 1 | 1 | |
| 13107 | 13107-0046 | SHAFT,OIL PUMP | | 1 | 1 | 1 | 1 | |
| 13216 | 13216-0872 | GEAR-COMP,OIL PUMP,41T | | 1 | 1 | 1 | 1 | |
| 13280 | 13280-0711 | HOLDER | | 1 | 1 | 1 | 1 | |
| 16097 | 16097-0008 | FILTER-ASSY-OIL | | 1 | 1 | 1 | 1 | |
| 16130 | 16130-1058 | VALVE-ASSY-RELIEF | | 1 | 1 | 1 | 1 | |
| 16142 | 16142-0063 | COVER-PUMP | | 1 | 1 | 1 | 1 | |
| 16142A | 16142-1146 | COVER-PUMP,OIL | | 1 | 1 | 1 | 1 | |
| 16154 | 16154-0057 | ROTOR-PUMP | | 1 | 1 | 1 | 1 | |
| 16160 | 16160-0727 | BODY,OIL PUMP | | 1 | 1 | 1 | 1 | |
| 49063 | 49063-1055 | SEAL-MECHANICAL,WATER | | 1 | 1 | 1 | 1 | |
| 49065 | 49065-0712 | FILTER-OIL | | 1 | 1 | 1 | 1 | |
| 59256 | 59256-0555 | IMPELLER | | 1 | 1 | 1 | 1 | |
| 92022 | 92022-077 | WASHER,6.1X12X1 | | 1 | 1 | 1 | 1 | |
| 92042 | 92042-030 | PIN,DOWEL,4X13.8 | | 1 | 1 | 1 | 1 | |
| 92043 | 92043-1262 | PIN,4.2X6X12 | | 1 | 1 | 1 | 1 | |
| 92043A | 92043-1263 | PIN,6.2X8X14 | | 2 | 2 | 2 | 2 | |
| 92049 | 92049-0778 | SEAL-OIL | | 1 | 1 | 1 | 1 | |
| 92055 | 92055-0738 | RING-O,63.3X3.1 | | 1 | 1 | 1 | 1 | |
| 92055A | 92055-1503 | RING-O,OIL FILTER | | 1 | 1 | 1 | 1 | |
| 92055B | 92055-1571 | RING-O,WATER PUMP COVER | | 1 | 1 | 1 | 1 | |
| 92055C | 92055-3018 | RING-O,59.6X2.4 | | 1 | 1 | 1 | 1 | |
| 92151 | 92151-1234 | BOLT,6X50 | | 1 | 1 | 1 | 1 | |
| 92154 | 92154-0735 | BOLT | | 1 | 1 | 1 | 1 | |
| 92154A | 92154-0949 | BOLT-FLANGED-SMALL,6X60 | | 2 | 2 | 2 | 2 | |
| 92154B | 92154-1069 | BOLT,FLANGED,6X22 | | 1 | 1 | 1 | 1 | |
| 92171 | 92171-1420 | CLAMP | | 1 | 1 | 1 | 1 | |
| 92200 | 92200-0786 | WASHER,11X18X1 | | 1 | 1 | 1 | 1 | |
| 92200A | 92200-0818 | WASHER | | 1 | 1 | 1 | 1 | |
| 132 | 132BA0612 | BOLT-FLANGED-SMALL,6X12 | | 1 | 1 | 1 | 1 | |
| 480 | 480J1100 | CIRCLIP-TYPE-C,11MM | | 1 | 1 | 1 | 1 | |
| 551 | 551A0408 | PIN-DOWEL,4X8 | | 2 | 2 | 2 | 2 | |

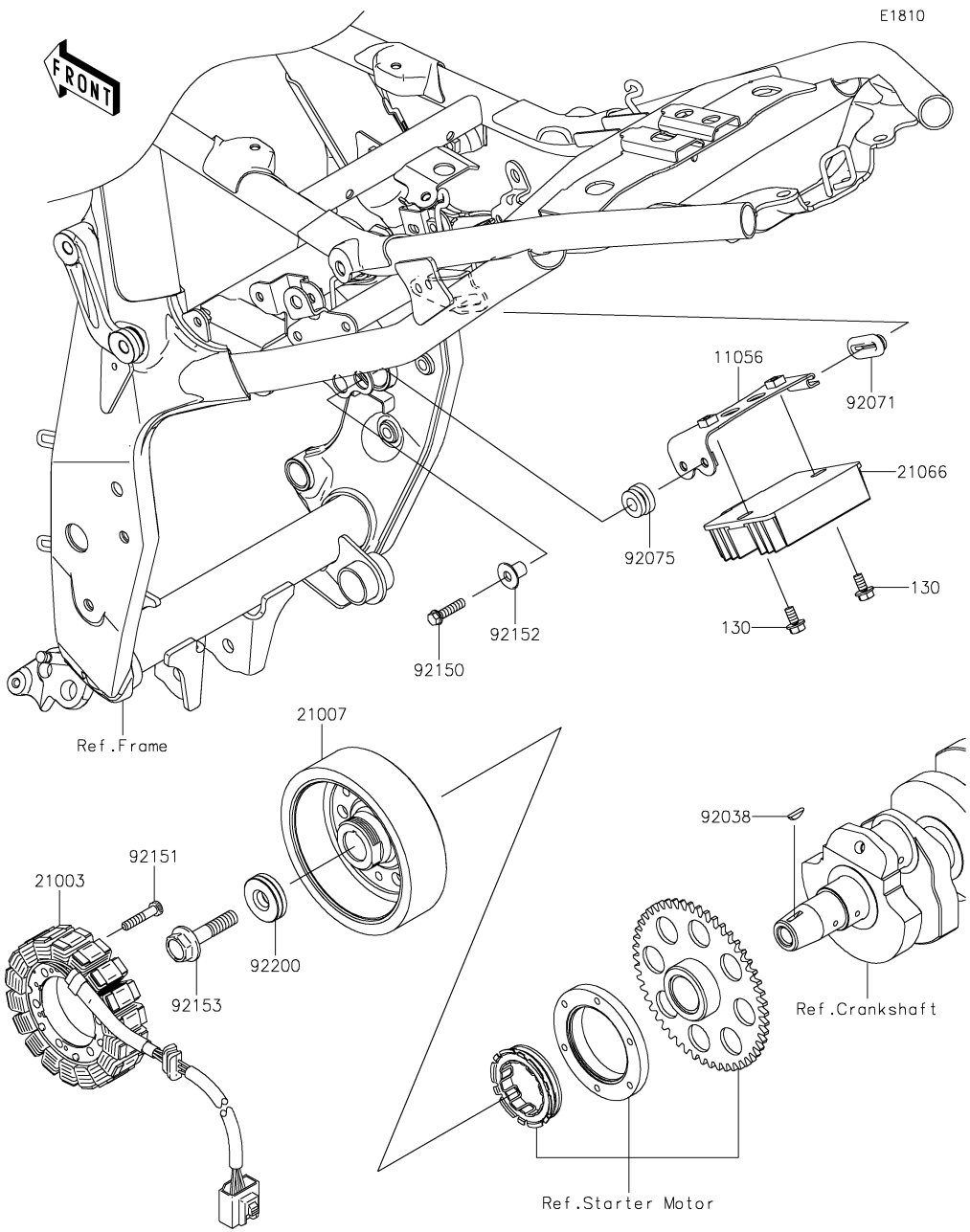


| Ref. No. | Part No. | Description | Spec Code | Quantity-ZR800 '13 ADS | '14 AEF | '15 AFF | '16 AGF | |
|---|---|---|---|---|---|---|---|---|
| 11056 | 11056-1757 | BRACKET,REGULATOR | | 1 | 1 | 1 | 1 | |
| 21003 | 21003-0133 | STATOR | | 1 | 1 | 1 | 1 | |
| 21007 | 21007-0576 | ROTOR | | 1 | 1 | 1 | 1 | |
| 21066 | 21066-0720 | REGULATOR-VOLTAGE | | 1 | 1 | 1 | 1 | |
| 92038 | 92038-1060 | KEY | | 1 | 1 | 1 | 1 | |
| 92071 | 92071-1187 | GROMMET | | 1 | 1 | 1 | 1 | |
| 92075 | 92075-1123 | DAMPER,RUBBER | | 2 | 2 | 2 | 2 | |
| 92150 | 92150-1779 | BOLT,FLANGED-SMALL,6X25 | | 2 | 2 | 2 | 2 | |
| 92151 | 92151-1626 | BOLT,6X30 | | 4 | 4 | 4 | 4 | |
| 92152 | 92152-0667 | COLLAR | | 2 | 2 | 2 | 2 | |
| 92153 | 92153-1855 | BOLT,12X40 | | 1 | 1 | 1 | 1 | |
| 92200 | 92200-0369 | WASHER,12X34X9 | | 1 | 1 | 1 | 1 | |
| 130 | 130BB0614 | BOLT-FLANGED,6X14 | | 2 | 2 | 2 | 2 | |

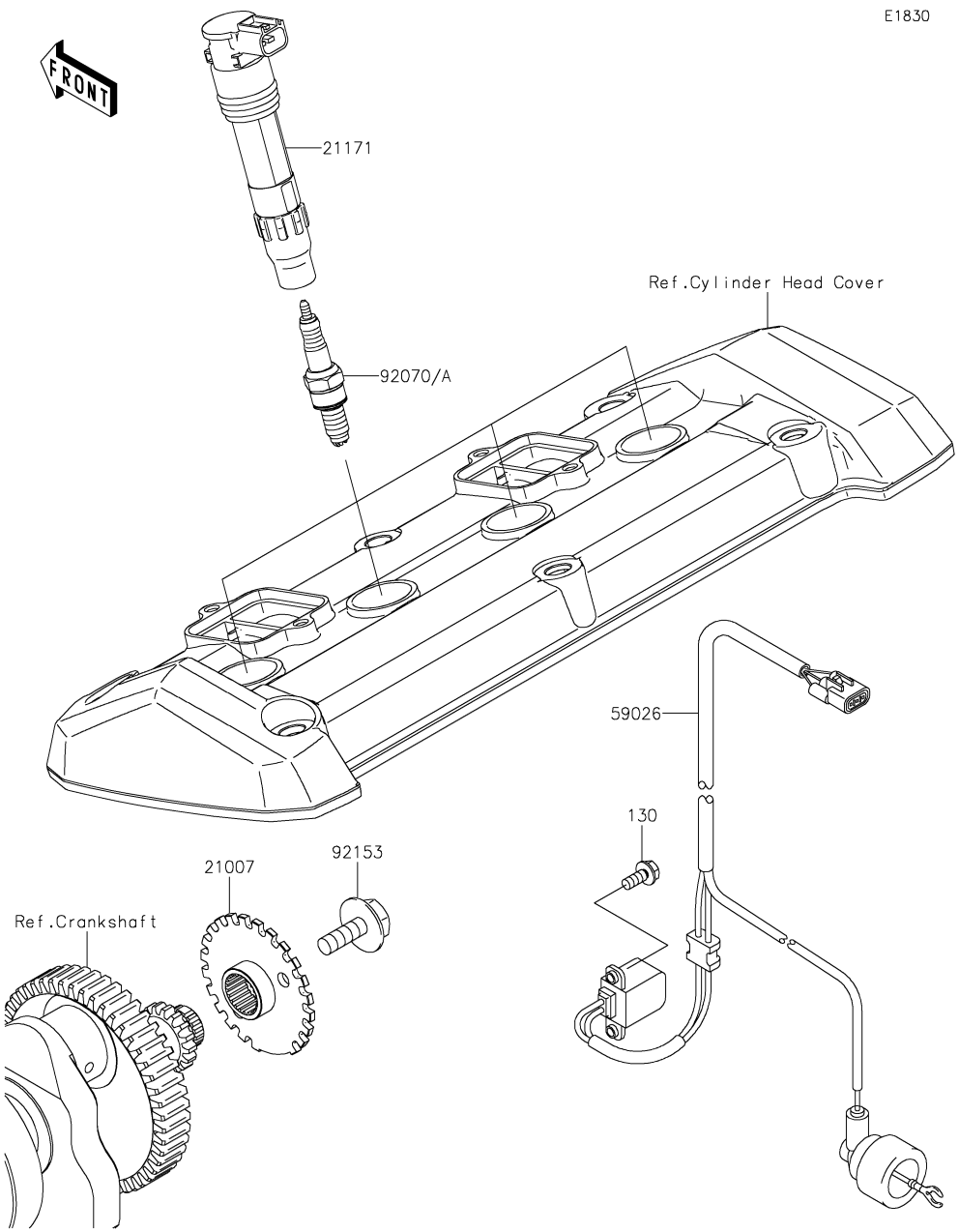


| Ref. No. | Part No. | Description | Spec Code | Quantity-ZR800 '13 ADS | '14 AEF | '15 AFF | '16 AGF | |
|---|---|---|---|---|---|---|---|---|
| 21007 | 21007-0081 | ROTOR | | 1 | 1 | 1 | 1 | |
| 21171 | 21171-0033 | COIL-ASSY-IGNITION | | 4 | 4 | 4 | 4 | |
| 59026 | 59026-0555 | COIL-PULSING | | 1 | 1 | 1 | 1 | |
| 92070 | | PLUG-SPARK,U27ETR(ND) | | 4 | 4 | 4 | 4 | |
| | | (LOCAL PROCUREMENT ITEM) | | | | | | |
| 92070A | 92070-1264 | PLUG-SPARK,CR9EK(NGK) | | 4 | 4 | 4 | 4 | |
| 92153 | 92153-0549 | BOLT,FLANGED,8X23 | | 1 | 1 | 1 | 1 | |
| 130 | 130BA0512 | BOLT-FLANGED,5X12 | | 2 | 2 | 2 | 2 | |

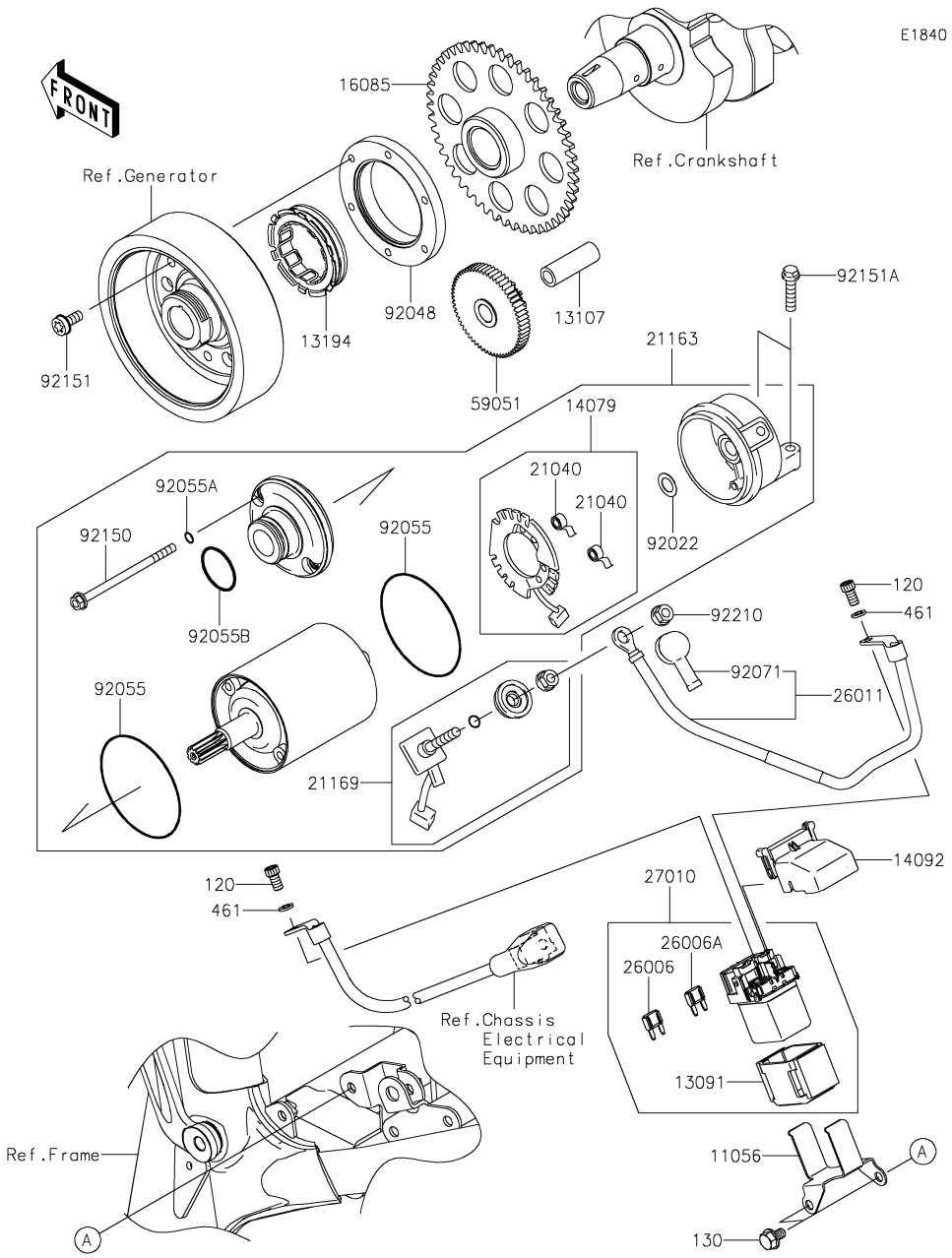


| Ref. No. | Part No. | Description | Spec Code | Quantity-ZR800 '13 ADS | '14 AEF | '15 AFF | '16 AGF | |
|---|---|---|---|---|---|---|---|---|
| 11056 | 11056-2049 | BRACKET | | 1 | 1 | 1 | 1 | |
| 13091 | 13091-1884 | HOLDER,MAGNETIC SWITCH | | 1 | 1 | 1 | 1 | |
| 13107 | 13107-0744 | SHAFT,IDLER GEAR | | 1 | 1 | 1 | 1 | |
| 13194 | 13194-1096 | CLUTCH-ONEWAY | | 1 | 1 | 1 | 1 | |
| 14079 | 14079-0009 | HOLDER-ASSY,STARTER | | 1 | 1 | 1 | 1 | |
| 14092 | 14092-0109 | COVER | | 1 | 1 | 1 | 1 | |
| 16085 | 16085-1303 | GEAR,CLUTCH ONEWAY | | 1 | 1 | 1 | 1 | |
| 21040 | 21040-0001 | SPRING-BRUSH | | 2 | 2 | 2 | 2 | |
| 21163 | 21163-0729 | STARTER-ELECTRIC | | 1 | 1 | 1 | 1 | |
| 21169 | 21169-1058 | TERMINAL,STARTER | | 1 | 1 | 1 | 1 | |
| 26006 | 26006-0001 | FUSE,MINI BLADE,15A,BLUE | | 1 | 1 | 1 | 1 | |
| 26006A | 26006-1080 | FUSE,MINI BLADE,30A,GREEN | | 1 | 1 | 1 | 1 | |
| 26011 | 26011-0760 | WIRE-LEAD | | 1 | 1 | 1 | 1 | |
| 27010 | 27010-0113 | SWITCH | | 1 | 1 | 1 | 1 | |
| 59051 | 59051-0714 | GEAR-SPUR,IDLER | | 1 | 1 | 1 | 1 | |
| 92022 | 92022-2200 | WASHER | | 1 | 1 | 1 | 1 | |
| 92048 | 92048-0018 | RACE | | 1 | 1 | 1 | 1 | |
| 92055 | 92055-1260 | RING-O,62MM | | 2 | 2 | 2 | 2 | |
| 92055A | 92055-1261 | RING-O,4.5MM | | 2 | 2 | 2 | 2 | |
| 92055B | 92055-1262 | RING-O,24.4X3.1 | | 1 | 1 | 1 | 1 | |
| 92071 | 92071-0713 | GROMMET | | 1 | 1 | 1 | 1 | |
| 92150 | 92150-1237 | BOLT | | 2 | 2 | 2 | 2 | |
| 92151 | 92151-1335 | BOLT,6X14 | | 6 | 6 | 6 | 6 | |
| 92151A | 92151-1930 | BOLT,FLANGED-SMALL,6X25 | | 2 | 2 | 2 | 2 | |
| 92210 | 92210-0188 | NUT,6MM | | 1 | 1 | 1 | 1 | |
| 120 | 120CB0510 | BOLT-SOCKET,5X10 | | 2 | 2 | 2 | 2 | |
| 130 | 130CC0610 | BOLT-FLANGED,6X10 | | 2 | 2 | 2 | 2 | |
| 461 | 461DB0500 | WASHER-SPRING,5MM | | 2 | 2 | 2 | 2 | |

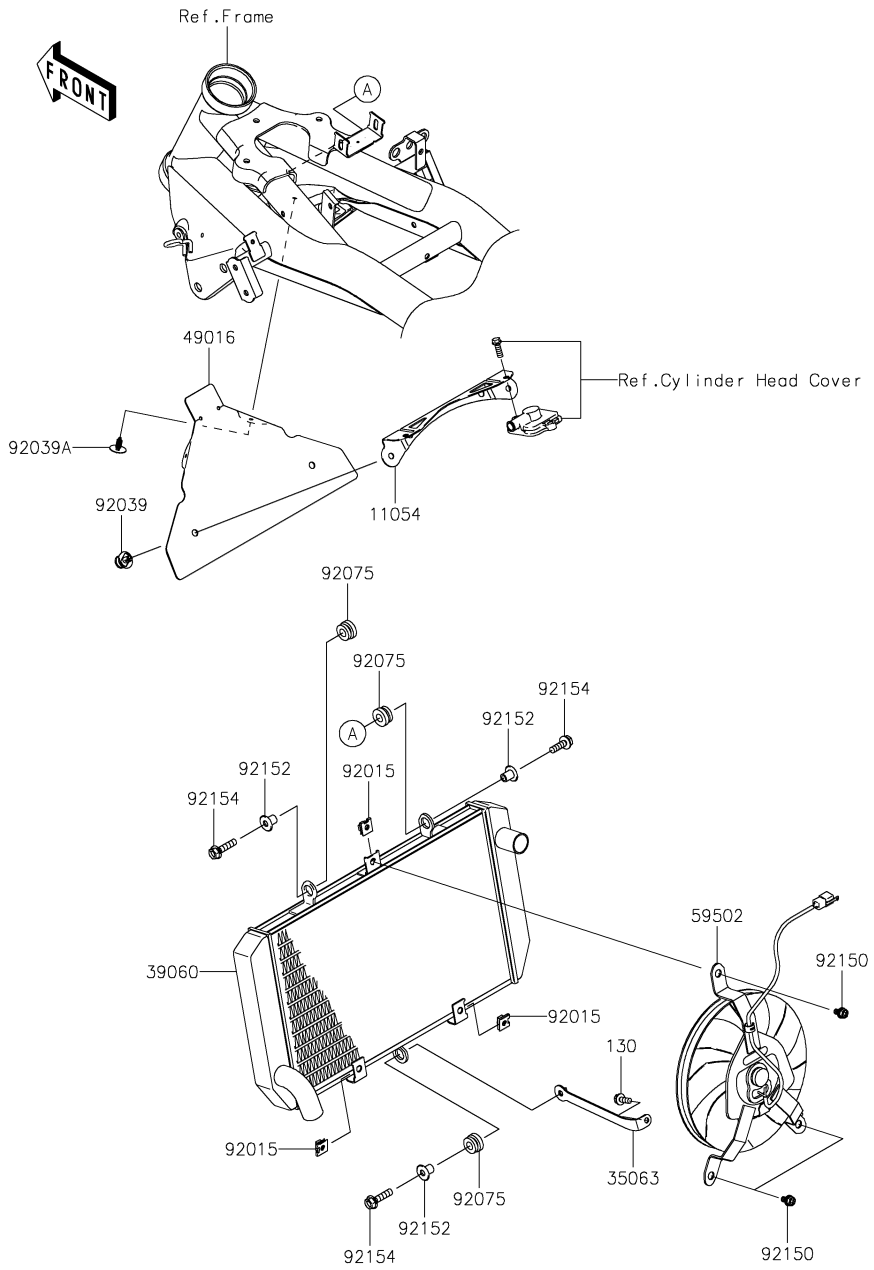


| Ref. No. | Part No. | Description | Spec Code | Quantity-ZR800 '13 ADS | '14 AEF | '15 AFF | '16 AGF | |
|---|---|---|---|---|---|---|---|---|
| 11054 | 11054-0646 | BRACKET | | 1 | 1 | 1 | 1 | |
| 35063 | 35063-0855 | STAY | | 1 | 1 | 1 | 1 | |
| 39060 | 39060-0034 | RADIATOR | | 1 | 1 | 1 | 1 | |
| 49016 | 49016-0032 | COVER-SEAL,HOT WIND | | 1 | 1 | 1 | 1 | |
| 59502 | 59502-0577 | FAN-ASSY | | 1 | 1 | 1 | 1 | |
| 92015 | 92015-1487 | NUT | | 3 | 3 | 3 | 3 | |
| 92039 | 92039-0014 | RIVET,HOLE 8MM | | 2 | 2 | 2 | 2 | |
| 92039A | 92039-0027 | RIVET | | 2 | 2 | 2 | 2 | |
| 92075 | 92075-1123 | DAMPER,RUBBER | | 3 | 3 | 3 | 3 | |
| 92150 | 92150-1186 | BOLT,6X12 | | 3 | 3 | 3 | 3 | |
| 92152 | 92152-0667 | COLLAR | | 3 | 3 | 3 | 3 | |
| 92154 | 92154-0965 | BOLT,FLANGED,6X25 | | 3 | 3 | 3 | 3 | |
| 130 | 130CC0616 | BOLT-FLANGED,6X16 | | 1 | 1 | 1 | 1 | |

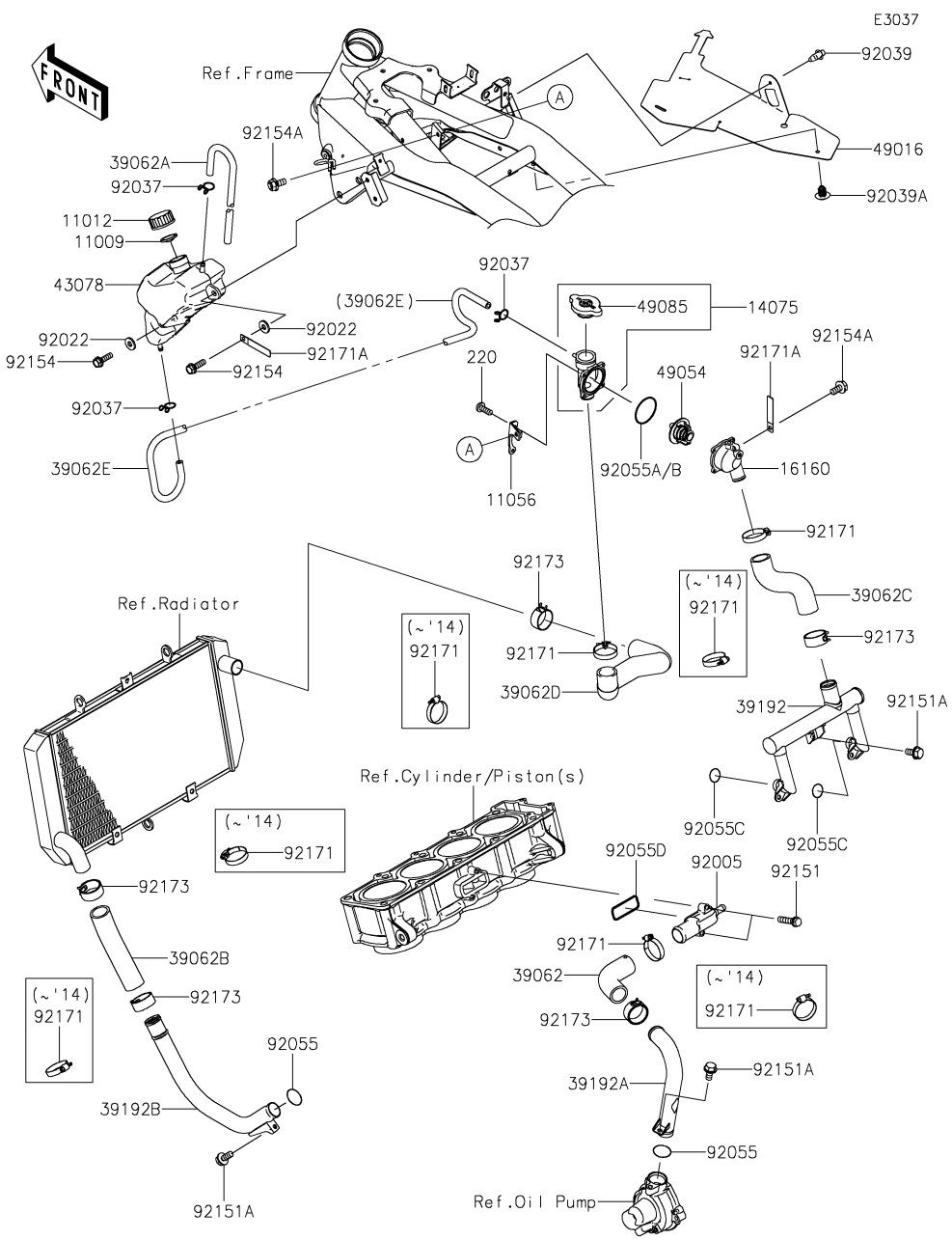


| Ref. No. | Part No. | Description | Spec Code | Quantity-ZR800 '13 ADS | '14 AEF | '15 AFF | '16 AGF | |
|---|---|---|---|---|---|---|---|---|
| 11009 | 11009-1145 | GASKET,RESERVOIR TANK CAP | | 1 | 1 | 1 | 1 | |
| 11012 | 11012-1084 | CAP | | 1 | 1 | 1 | 1 | |
| 11056 | 11056-1800 | BRACKET,THERMOSTAT | | 1 | 1 | 1 | 1 | |
| 14075 | 14075-0001 | CAP-ASSY | | 1 | 1 | 1 | 1 | |
| 16160 | 16160-0725 | BODY,LWR | | 1 | 1 | 1 | 1 | |
| 39062 | 39062-0605 | HOSE-COOLING,PUMP-CYLINDER | | 1 | 1 | 1 | 1 | |
| 39062A | 39062-0632 | HOSE-COOLING,OVER FLOW | | 1 | 1 | 1 | 1 | |
| 39062B | 39062-0673 | HOSE-COOLING,RAD.-PIPE | | 1 | 1 | 1 | 1 | |
| 39062C | 39062-0674 | HOSE-COOLING,HEAD-THERMO | | 1 | 1 | 1 | 1 | |
| 39062D | 39062-0675 | HOSE-COOLING,THERMO-RAD. | | 1 | 1 | 1 | 1 | |
| 39062E | 39062-1610 | HOSE-COOLING,DRAIN | | 1 | 1 | 1 | 1 | |
| 39192 | 39192-0073 | PIPE-WATER | | 1 | 1 | 1 | 1 | |
| 39192A | 39192-0566 | PIPE-WATER | | 1 | 1 | 1 | 1 | |
| 39192B | 39192-0568 | PIPE-WATER | | 1 | 1 | 1 | 1 | |
| 43078 | 43078-0559 | RESERVOIR | | 1 | 1 | 1 | 1 | |
| 49016 | 49016-0600 | COVER-SEAL | | 1 | 1 | 1 | 1 | |
| 49054 | 49054-0004 | THERMOSTAT | | 1 | 1 | 1 | 1 | |
| 49085 | 49085-1066 | CAP-ASSY-PRESSURE | | 1 | 1 | 1 | 1 | |
| 92005 | 92005-0744 | FITTING | | 1 | 1 | 1 | 1 | |
| 92022 | 92022-1565 | WASHER,6.5X16X2 | | 2 | 2 | 2 | 2 | |
| 92037 | 92037-147 | CLAMP,TUBE | | 3 | 3 | 3 | 3 | |
| 92039 | 92039-0709 | RIVET | | 1 | 1 | 1 | 1 | |
| 92039A | 92039-0722 | RIVET | | 1 | 1 | 1 | 1 | |
| 92055 | 92055-0114 | RING-O,20.8X2.4 | | 2 | 2 | 2 | 2 | |
| 92055A | 92055-0831 | RING-O,53.5X2.6 | | | | 1 | 1 | |
| 92055B | 92055-112 | RING-O,53.5X2.6 | | 1 | 1 | | | |
| 92055C | 92055-1350 | RING-O,18.54X2.6 | | 2 | 2 | 2 | 2 | |
| 92055D | 92055-1402 | RING-O | | 1 | 1 | 1 | 1 | |
| 92151 | 92151-1930 | BOLT,FLANGED-SMALL,6X25 | | 2 | 2 | 2 | 2 | |
| 92151A | 92151-1997 | BOLT,6X12 | | 5 | 5 | 5 | 5 | |
| 92154 | 92154-0776 | BOLT,FLANGED,6X20 | | 2 | 2 | 2 | 2 | |
| 92154A | 92154-1050 | BOLT,FLANGED,6X12 | | 2 | 2 | 2 | 2 | |
| 92171 | 92171-0179 | CLAMP | | 8 | 8 | 3 | 3 | |
| 92171A | 92171-0652 | CLAMP,L=60 | | 2 | 2 | 2 | 2 | |
| 92173 | 92173-0072 | CLAMP | | | | 5 | 5 | |
| 220 | 220AA0514 | SCREW-PAN-CROS,5X14 | | 4 | 4 | 4 | 4 | |

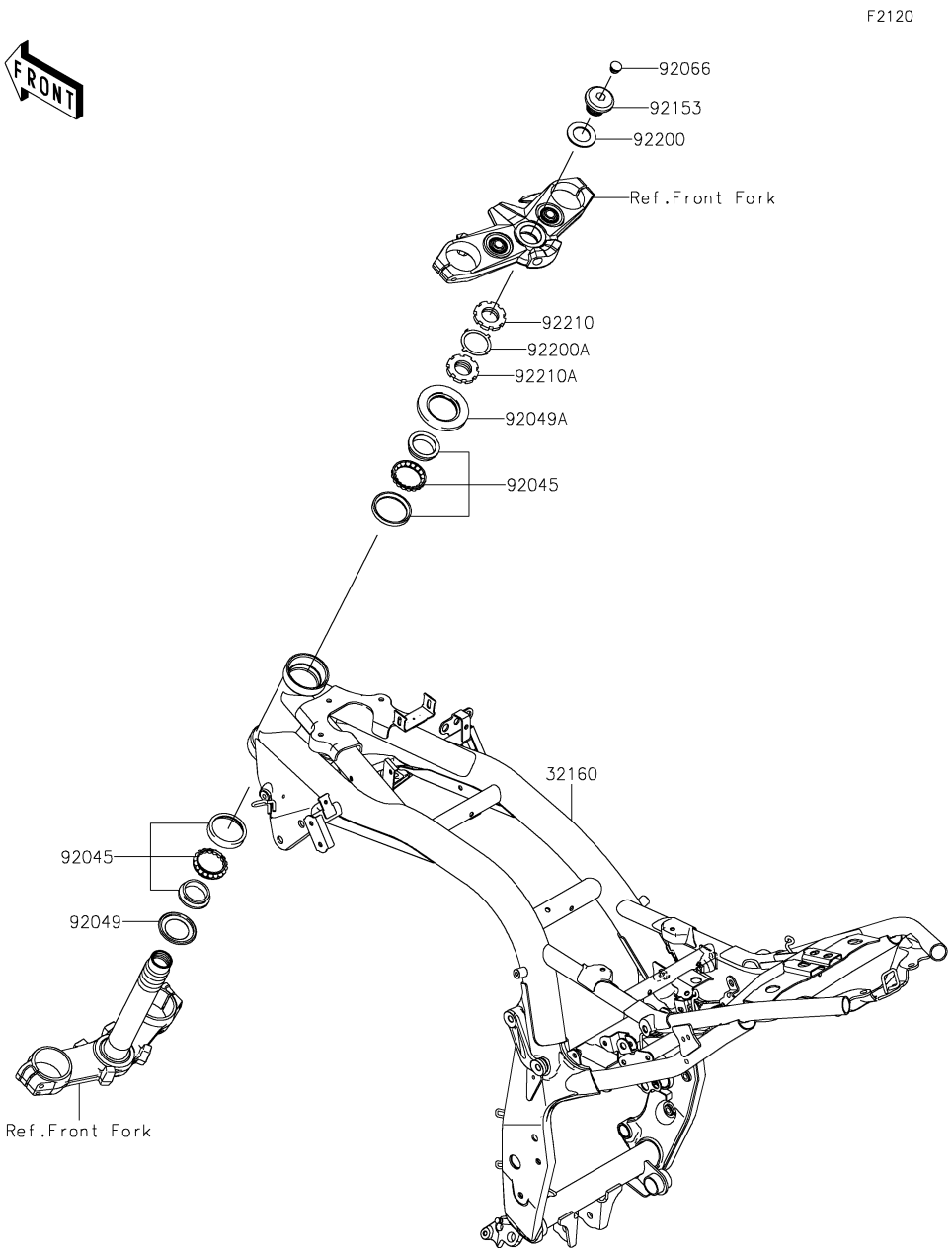


| Ref. No. | Part No. | Description | Spec Code | Quantity-ZR800 '13 ADS | '14 AEF | '15 AFF | '16 AGF | |
|---|---|---|---|---|---|---|---|---|
| 32160 | 32160-0678-18R | FRAME-COMP,F.S.BLACK | | 1 | 1 | 1 | 1 | |
| 92045 | 92045-1384 | BEARING-BALL,SF07A17PX1V1 | | 2 | 2 | 2 | 2 | |
| 92049 | 92049-0022 | SEAL-OIL,DS35X55X4 | | 1 | 1 | 1 | 1 | |
| 92049A | 92049-1483 | SEAL-OIL,MX043N2 | | 1 | 1 | 1 | 1 | |
| 92066 | 92066-0071 | PLUG | | 1 | 1 | 1 | 1 | |
| 92153 | 92153-0474 | BOLT,26MM | | 1 | 1 | 1 | 1 | |
| 92200 | 92200-0753 | WASHER,27X42X2.3 | | 1 | 1 | 1 | 1 | |
| 92200A | 92200-0781 | WASHER,27X42X2.3 | | 1 | 1 | 1 | 1 | |
| 92210 | 92210-0534 | NUT,STEERING STEM,35MM | | 1 | 1 | 1 | 1 | |
| 92210A | 92210-0535 | NUT,STEERING STEM,35MM | | 1 | 1 | 1 | 1 | |

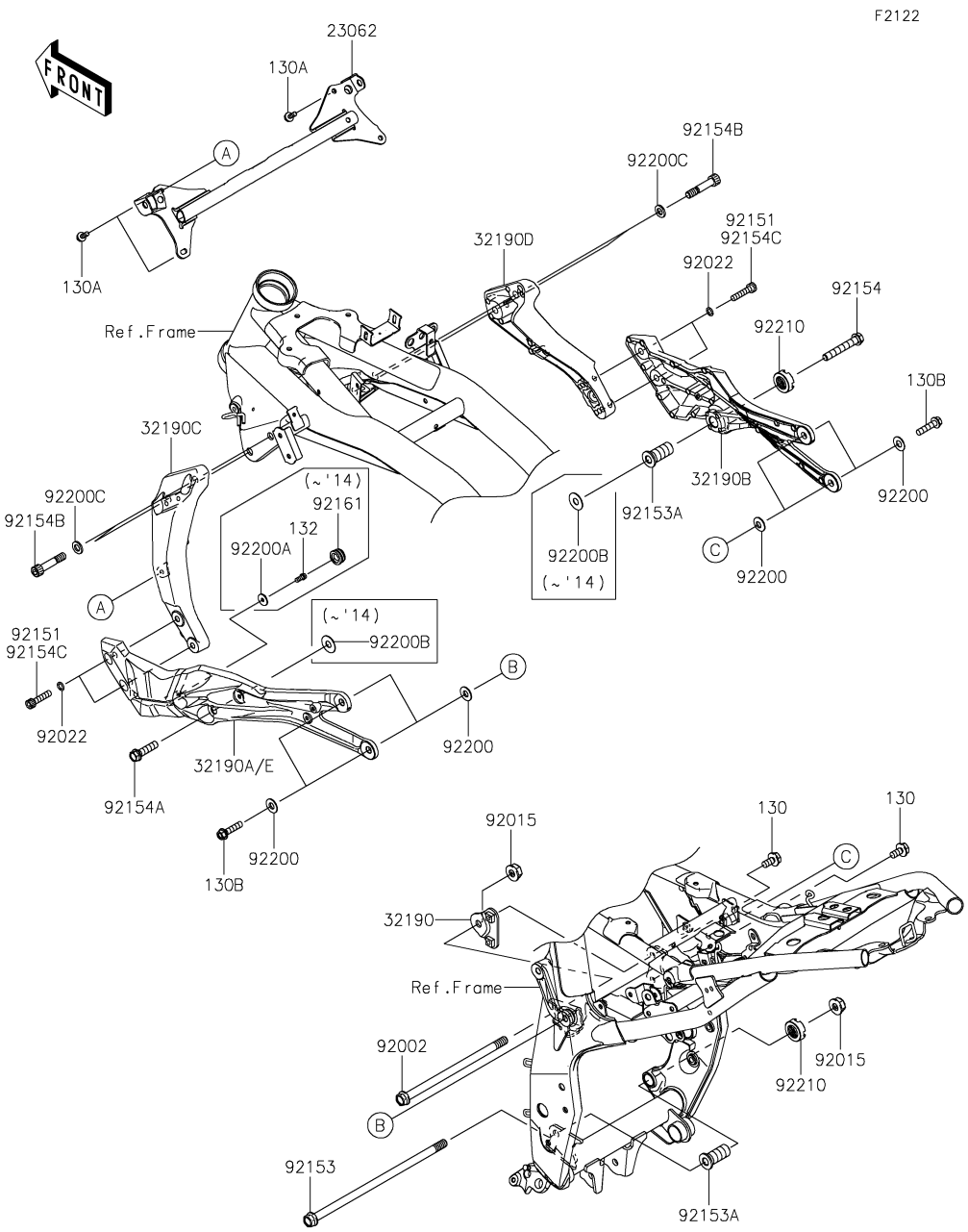


| Ref. No. | Part No. | Description | Spec Code | Quantity-ZR800 '13 ADS | '14 AEF | '15 AFF | '16 AGF | |
|---|---|---|---|---|---|---|---|---|
| 23062 | 23062-0776 | BRACKET-COMP,ENGINE | | 1 | 1 | 1 | 1 | |
| 32190 | 32190-0603 | BRACKET-ENGINE,RR,RH,UPP | | 1 | 1 | 1 | 1 | |
| 32190A | 32190-0619-18R | BRACKET-ENGINE,RR,LH,F.S.BLACK | | 1 | 1 | | | |
| 32190B | 32190-0620-18R | BRACKET-ENGINE,RR,RH,F.S.BLACK | | 1 | 1 | 1 | 1 | |
| 32190C | 32190-0635-18R | BRACKET-ENGINE,FR,LH,F.S.BLACK | | 1 | 1 | 1 | 1 | |
| 32190D | 32190-0636-18R | BRACKET-ENGINE,FR,RH,F.S.BLACK | | 1 | 1 | 1 | 1 | |
| 32190E | 32190-0683-18R | BRACKET-ENGINE,RR,LH,F.S.BLACK | | | | 1 | 1 | |
| 92002 | 92002-1337 | BOLT,10X183 | | 1 | 1 | 1 | 1 | |
| 92015 | 92015-1180 | NUT,FLANGED,10MM | | 2 | 2 | 2 | 2 | |
| 92022 | 92022-1028 | WASHER,8.5X13X1 | | 4 | 4 | 4 | 4 | |
| 92151 | 92151-1535 | BOLT,SOCKET,8X35 | | 4 | 4 | | | |
| 92153 | 92153-0559 | BOLT,FLANGED,10X240 | | 1 | 1 | 1 | 1 | |
| 92153A | 92153-1098 | BOLT,ENGINE MOUNT,18MM | | 2 | 2 | 2 | 2 | |
| 92154 | 92154-0312 | BOLT,FLANGED,10X65 | | 1 | 1 | 1 | 1 | |
| 92154A | 92154-0313 | BOLT,FLANGED,10X40 | | 1 | 1 | 1 | 1 | |
| 92154B | 92154-0729 | BOLT,SOCKET,10X50 | | 4 | 4 | 4 | 4 | |
| 92154C | 92154-1708 | BOLT,SOCKET,8X35 | | | | 4 | 4 | |
| 92161 | 92161-1511 | DAMPER,15X22X11.6 | | 1 | 1 | | | |
| 92200 | 92200-0832 | WASHER,10X22X3 | | 8 | 8 | 8 | 8 | |
| 92200A | 92200-0857 | WASHER,5.5X18X1.6 | | 1 | 1 | | | |
| 92200B | 92200-0880 | WASHER,10.5X27X1 | | 2 | 2 | | | |
| 92200C | 92200-1042 | WASHER,10.5X19X2.3 | | 4 | 4 | 4 | 4 | |
| 92210 | 92210-1203 | NUT,18MM | | 2 | 2 | 2 | 2 | |
| 130 | 130BB0816 | BOLT-FLANGED,8X16 | | 2 | 2 | 2 | 2 | |
| 130A | 130CB0618 | BOLT-FLANGED,6X18 | | 3 | 3 | 3 | 3 | |
| 130B | 130CB0835 | BOLT-FLANGED,8X35 | | 4 | 4 | 4 | 4 | |
| 132 | 132BA0512 | BOLT-FLANGED-SMALL,5X12 | | 1 | 1 | | | |

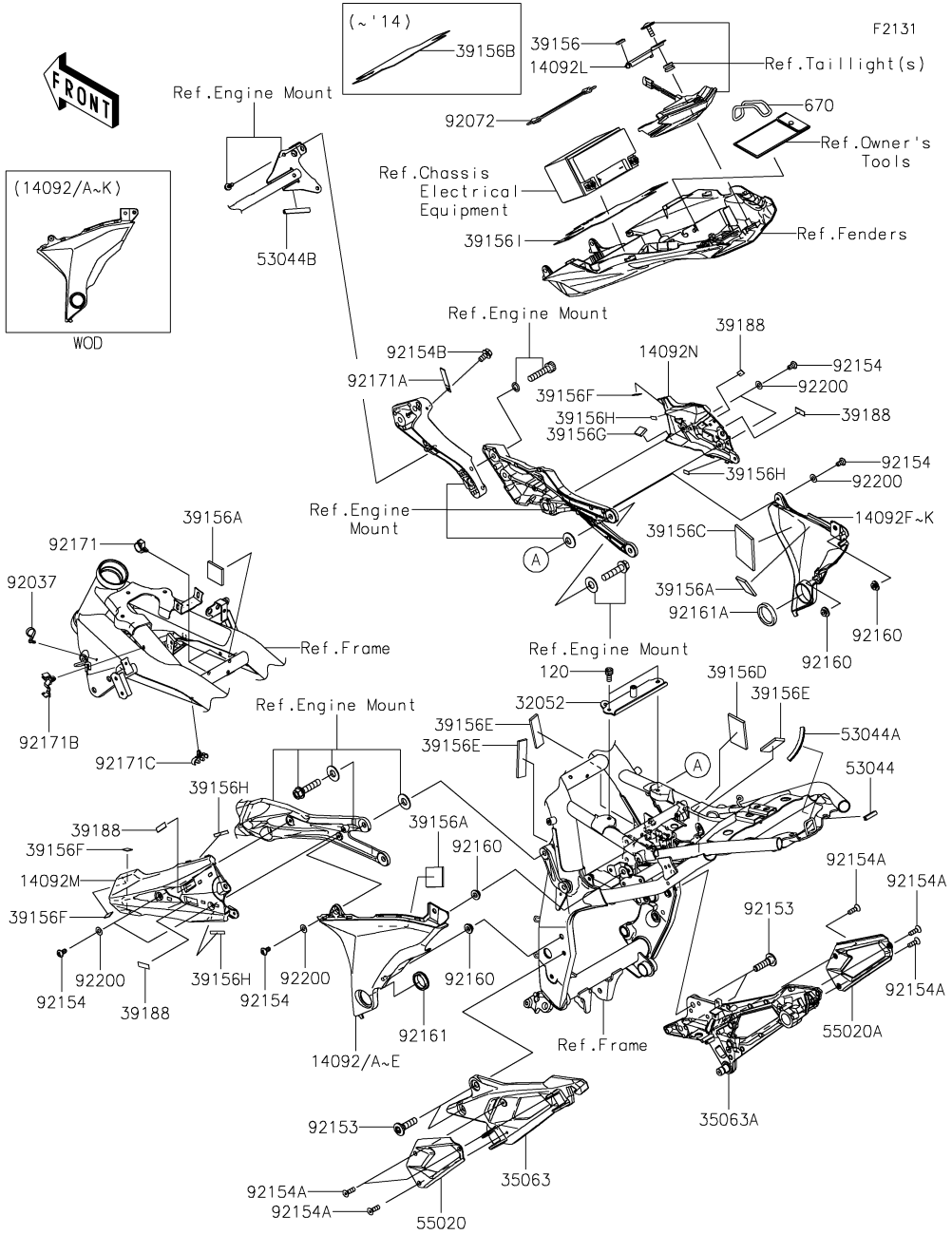


| Ref. No. | Part No. | Description | Spec Code | Quantity-ZR800 '13 ADS | '14 AEF | '15 AFF | '16 AGF | |
|---|---|---|---|---|---|---|---|---|
| 14092 | 14092-0962-15T | COVER,PIVOT,LH,C.B.ORANGE | | | 1 | | | |
| 14092A | 14092-0962-25Y | COVER,PIVOT,LH,P.S.WHITE | | 1 | | 1 | | |
| 14092B | 14092-0962-35K | COVER,PIVOT,LH,C.F.B.GREEN | | | 1 | | | |
| 14092C | 14092-0962-45L | COVER,PIVOT,LH,F.EBONY | | 1 | | 1 | 1 | |
| 14092D | 14092-0962-45Q | COVER,PIVOT,LH,C.F.B.GREEN | | 1 | | | | |
| 14092E | 14092-0962-660 | COVER,PIVOT,LH,M.S.BLACK | | | 1 | 1 | 1 | |
| 14092F | 14092-0963-15T | COVER,PIVOT,RH,C.B.ORANGE | | | 1 | | | |
| 14092G | 14092-0963-25Y | COVER,PIVOT,RH,P.S.WHITE | | 1 | | 1 | | |
| 14092H | 14092-0963-35K | COVER,PIVOT,RH,C.F.B.GREEN | | | 1 | | | |
| 14092I | 14092-0963-45L | COVER,PIVOT,RH,F.EBONY | | 1 | | 1 | 1 | |
| 14092J | 14092-0963-45Q | COVER,PIVOT,RH,C.F.B.GREEN | | 1 | | | | |
| 14092K | 14092-0963-660 | COVER,PIVOT,RH,M.S.BLACK | | | 1 | 1 | 1 | |
| 14092L | 14092-1055 | COVER,CORD | | 1 | 1 | 1 | 1 | |
| 14092M | 14092-1093-18T | COVER,SUB FRAME,LH,F.S.BLACK | | 1 | 1 | 1 | 1 | |
| 14092N | 14092-1094-18T | COVER,SUB FRAME,RH,F.S.BLACK | | 1 | 1 | 1 | 1 | |
| 32052 | 32052-0723 | BRACKET-TANK | | 1 | 1 | 1 | 1 | |
| 35063 | 35063-0863-18R | STAY,RR,LH,F.S.BLACK | | 1 | 1 | 1 | 1 | |
| 35063A | 35063-0864-18R | STAY,RR,RH,F.S.BLACK | | 1 | 1 | 1 | 1 | |
| 39156 | 39156-0284 | PAD | | 1 | 1 | 1 | 1 | |
| 39156A | 39156-0292 | PAD | | 3 | 3 | 3 | 3 | |
| 39156B | 39156-0870 | PAD,CORD COVER | | 1 | 1 | | | |
| 39156C | 39156-0951 | PAD,60X80X5 | | 1 | 1 | 1 | 1 | |
| 39156D | 39156-0952 | PAD,40X80X5 | | 1 | 1 | 1 | 1 | |
| 39156E | 39156-0953 | PAD,20X80X5 | | 3 | 3 | 3 | 3 | |
| 39156F | 39156-0960 | PAD,15X15X1 | | 3 | 3 | 3 | 3 | |
| 39156G | 39156-0961 | PAD,18X18X5 | | 1 | 1 | 1 | 1 | |
| 39156H | 39156-0967 | PAD,6X35 | | 4 | 4 | 4 | 4 | |
| 39156I | 39156-1949 | PAD,CORD COVER | | | | 1 | 1 | |
| 39188 | 39188-0558 | TAPE,10X30X0.5 | | 4 | 4 | 4 | 4 | |
| 53044 | 53044-0001 | TRIM,L=30 | | 1 | 1 | 1 | 1 | |
| 53044A | 53044-0018 | TRIM | | 1 | 1 | 1 | 1 | |
| 53044B | 53044-1249 | TRIM,L=60 | | 1 | 1 | 1 | 1 | |
| 55020 | 55020-0842 | GUARD,HEEL,LH | | 1 | 1 | 1 | 1 | |
| 55020A | 55020-0843 | GUARD,HEEL,RH | | 1 | 1 | 1 | 1 | |
| 92037 | 92037-1163 | CLAMP,SPEED,L=58 | | 1 | 1 | 1 | 1 | |
| 92072 | 92072-0741 | BAND,BATTERY | | 1 | 1 | 1 | 1 | |
| 92153 | 92153-1630 | BOLT,SOCKET,8X30 | | 4 | 4 | 4 | 4 | |
| 92154 | 92154-0215 | BOLT,SOCKET,5X10 | | 6 | 6 | 6 | 6 | |
| 92154A | 92154-1014 | BOLT,SOCKET,5X16 | | 6 | 6 | 6 | 6 | |
| 92154B | 92154-1050 | BOLT,FLANGED,6X12 | | 1 | 1 | 1 | 1 | |

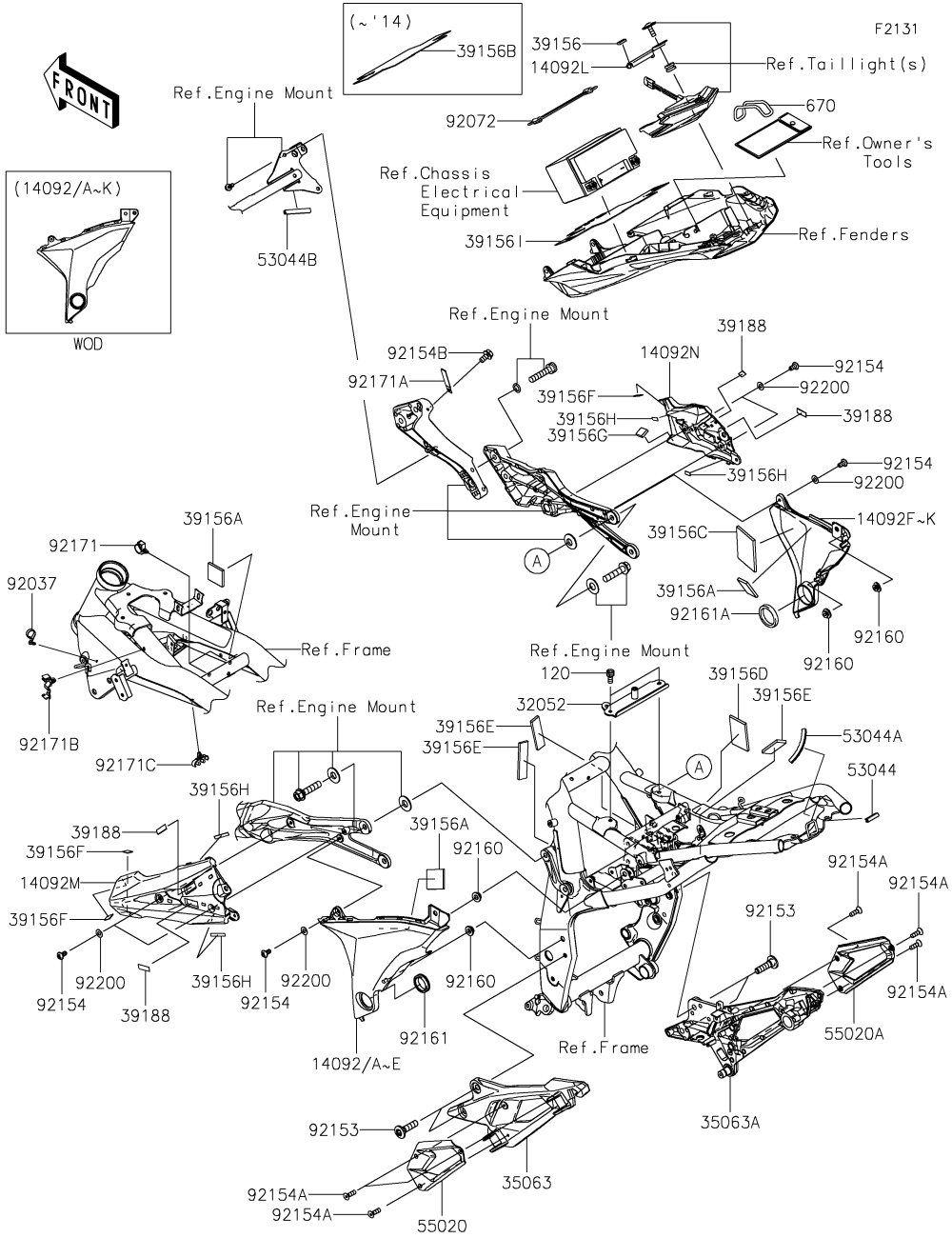


| Ref. No. | Part No. | Description | Spec Code | Quantity-ZR800 '13 ADS | '14 AEF | '15 AFF | '16 AGF | |
|---|---|---|---|---|---|---|---|---|
| 92160 | 92160-1613 | DAMPER | | 4 | 4 | 4 | 4 | |
| 92161 | 92161-0147 | DAMPER | | 1 | 1 | 1 | 1 | |
| 92161A | 92161-0148 | DAMPER | | 1 | 1 | 1 | 1 | |
| 92171 | 92171-0316 | CLAMP,BRAKE HOSE | | 2 | 2 | 2 | 2 | |
| 92171A | 92171-0652 | CLAMP,L=60 | | 1 | 1 | 1 | 1 | |
| 92171B | 92171-0789 | CLAMP,BRAKE HOSE | | 1 | 1 | 1 | 1 | |
| 92171C | 92171-1213 | CLAMP | | 1 | 1 | 1 | 1 | |
| 92200 | 92200-1480 | WASHER,NYLON,5.3X11.5X0.5 | | 6 | 6 | 6 | 6 | |
| 120 | 120CA0612 | BOLT-SOCKET,6X12 | | 2 | 2 | 2 | 2 | |
| 670 | 670B5075 | O RING,75MM | | 1 | 1 | 1 | 1 | |

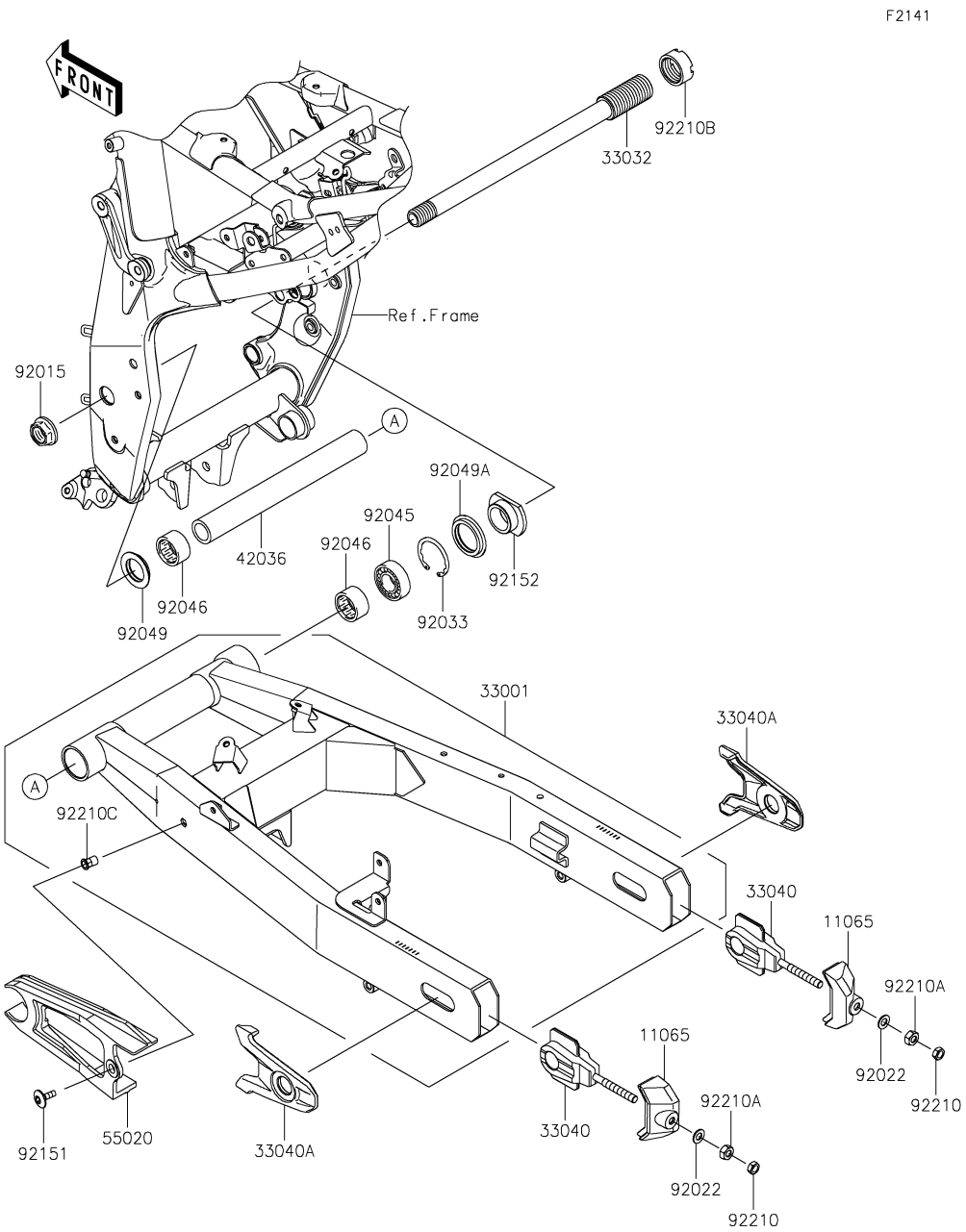


| Ref. No. | Part No. | Description | Spec Code | Quantity-ZR800 '13 ADS | '14 AEF | '15 AFF | '16 AGF | |
|---|---|---|---|---|---|---|---|---|
| 11065 | 11065-0750-18R | CAP,F.S.BLACK | | 2 | 2 | 2 | 2 | |
| 33001 | 33001-0604-18R | ARM-COMP-SWING,F.S.BLACK | | 1 | 1 | 1 | 1 | |
| 33032 | 33032-0005 | SHAFT-SWING ARM | | 1 | 1 | 1 | 1 | |
| 33040 | 33040-0078 | ADJUSTER-CHAIN,INNER | | 2 | 2 | 2 | 2 | |
| 33040A | 33040-0079-26M | ADJUSTER-CHAIN,OUTER,F.M.GRAY | | 2 | 2 | 2 | 2 | |
| 42036 | 42036-1264 | SLEEVE,SWING ARM,L=237 | | 1 | 1 | 1 | 1 | |
| 55020 | 55020-0061 | GUARD,CHAIN | | 1 | 1 | 1 | 1 | |
| 92015 | 92015-1724 | NUT,FLANGED,20MM | | 1 | 1 | 1 | 1 | |
| 92022 | 92022-1582 | WASHER,8.5X16X1.2 | | 2 | 2 | 2 | 2 | |
| 92033 | 92033-1041 | RING-SNAP,42MM | | 1 | 1 | 1 | 1 | |
| 92045 | 92045-0017 | BEARING-BALL,6004UL11 | | 1 | 1 | 1 | 1 | |
| 92046 | 92046-0008 | BEARING-NEEDLE,7E-HVS 28X34X17 | | 2 | 2 | 2 | 2 | |
| 92049 | 92049-1181 | SEAL-OIL,28X34X5.7 | | 1 | 1 | 1 | 1 | |
| 92049A | 92049-1380 | SEAL-OIL,MHA 35 42 5.7F | | 1 | 1 | 1 | 1 | |
| 92151 | 92151-1149 | BOLT,SOCKET,6X18 | | 1 | 1 | 1 | 1 | |
| 92152 | 92152-1765 | COLLAR,28X52X15.5 | | 1 | 1 | 1 | 1 | |
| 92210 | 92210-0116 | NUT,8MM | | 2 | 2 | 2 | 2 | |
| 92210A | 92210-0117 | NUT,8MM | | 2 | 2 | 2 | 2 | |
| 92210B | 92210-0775 | NUT,28MM | | 1 | 1 | 1 | 1 | |
| 92210C | 92210-1397 | NUT,POP,6MM,L=15 | | 1 | 1 | 1 | 1 | |

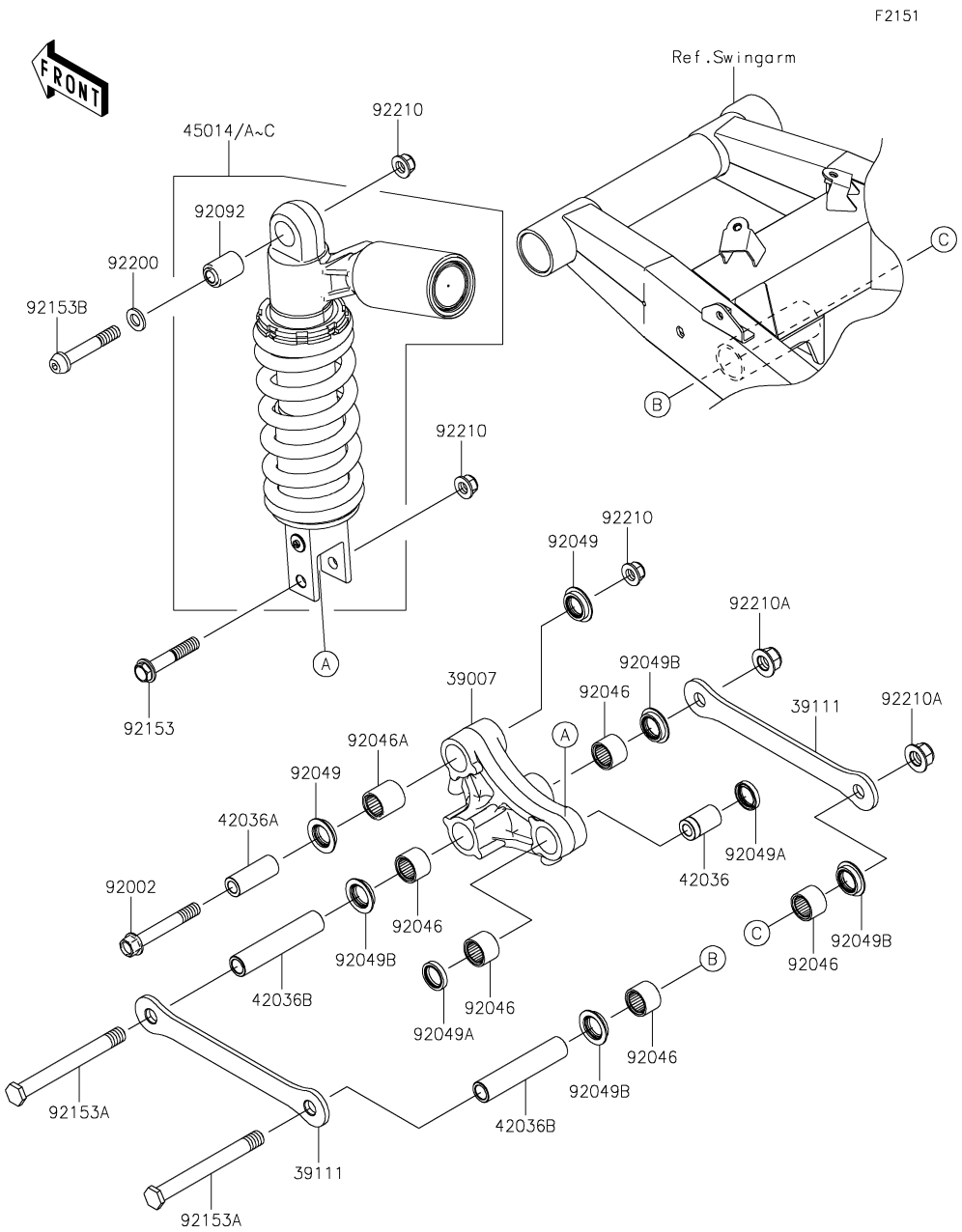


| Ref. No. | Part No. | Description | Spec Code | Quantity-ZR800 '13 ADS | '14 AEF | '15 AFF | '16 AGF | |
|---|---|---|---|---|---|---|---|---|
| 39007 | 39007-0003 | ARM-SUSP,UNI TRAK | | 1 | 1 | 1 | 1 | |
| 39111 | 39111-0017 | ROD-TIE,SUSPENSION | | 2 | 2 | 2 | 2 | |
| 42036 | 42036-0717 | SLEEVE,10.1X18X30 | | 1 | 1 | 1 | 1 | |
| 42036A | 42036-0718 | SLEEVE,10.1X17X44.5 | | 1 | 1 | 1 | 1 | |
| 42036B | 42036-1360 | SLEEVE,12.1X18X90 | | 2 | 2 | 2 | 2 | |
| 45014 | 45014-0386-37K | SHOCK,SPG SIL+BODY BLK+CAP SIL | | 1 | | | | |
| 45014A | 45014-0386-37N | SHOCK,SPG SIL+BODY BLK+CAP SIL | | | 1 | | | |
| 45014B | 45014-0386-37Z | SHOCKABSORBER,SPG GRN+BODY BLK | | | | 1 | 1 | |
| 45014C | 45014-0386-52E | SHOCKABSORBER,BLACK | | | | | 1 | |
| 92002 | 92002-1183 | BOLT,10X70 | | 1 | 1 | 1 | 1 | |
| 92046 | 92046-1272 | BEARING-NEEDLE,SFYZM182417 | | 5 | 5 | 5 | 5 | |
| 92046A | 92046-1273 | BEARING-NEEDLE,SFYZM172425 | | 1 | 1 | 1 | 1 | |
| 92049 | 92049-1223 | SEAL-OIL,MHA17245.7F | | 2 | 2 | 2 | 2 | |
| 92049A | 92049-1225 | SEAL-OIL,MHA18244 | | 2 | 2 | 2 | 2 | |
| 92049B | 92049-1493 | SEAL-OIL,KCR MF018N1 | | 4 | 4 | 4 | 4 | |
| 92092 | 92092-0003 | BUSHING-RUBBER | | 1 | 1 | 1 | 1 | |
| 92153 | 92153-1546 | BOLT,FLANGED,10X55 | | 1 | 1 | 1 | 1 | |
| 92153A | 92153-1662 | BOLT,12X114 | | 2 | 2 | 2 | 2 | |
| 92153B | 92153-1837 | BOLT,SOCKET,10X60 | | 1 | 1 | 1 | 1 | |
| 92200 | 92200-1042 | WASHER,10.5X19X2.3 | | 1 | 1 | 1 | 1 | |
| 92210 | 92210-1139 | NUT,LOCK,FLANGED,10MM | | 3 | 3 | 3 | 3 | |
| 92210A | 92210-1150 | NUT,LOCK,FLANGED,12MM | | 2 | 2 | 2 | 2 | |

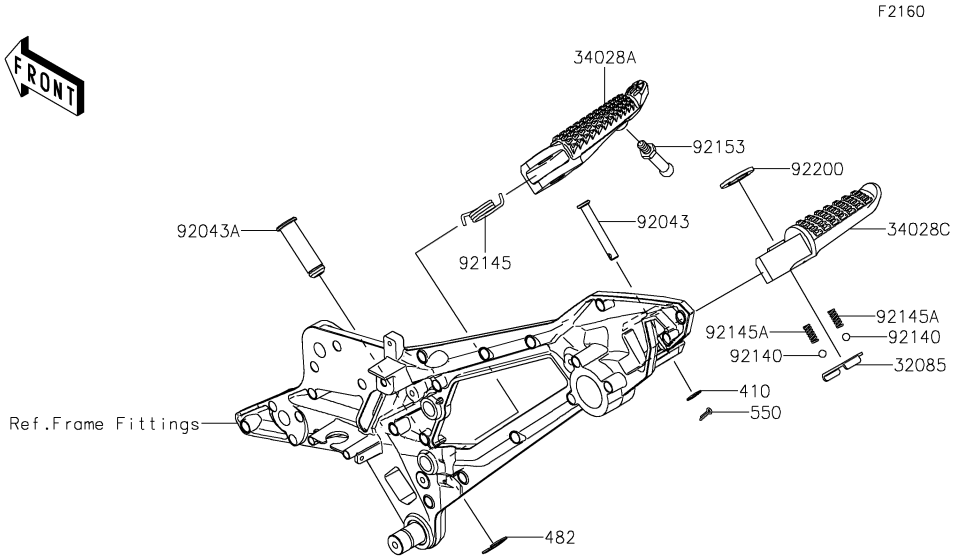


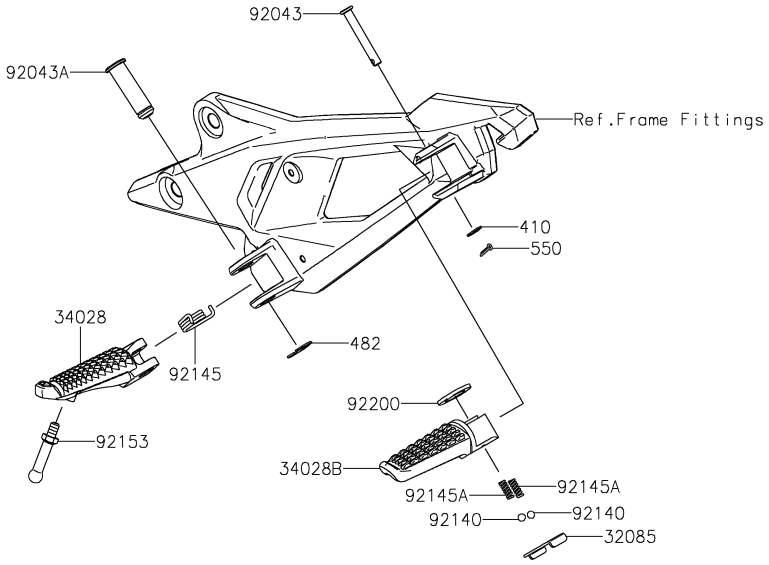


| Ref. No. | Part No. | Description | Spec Code | Quantity-ZR800 '13 ADS | '14 AEF | '15 AFF | '16 AGF | |
|---|---|---|---|---|---|---|---|---|
| 32085 | 32085-0047 | STOPPER,REAR STEP | | 2 | 2 | 2 | 2 | |
| 34028 | 34028-0092 | STEP,FR,LH | | 1 | 1 | 1 | 1 | |
| 34028A | 34028-0093 | STEP,FR,RH | | 1 | 1 | 1 | 1 | |
| 34028B | 34028-0094 | STEP,RR,LH | | 1 | 1 | 1 | 1 | |
| 34028C | 34028-0095 | STEP,RR,RH | | 1 | 1 | 1 | 1 | |
| 92043 | 92043-0770 | PIN,6X43 | | 2 | 2 | 2 | 2 | |
| 92043A | 92043-1594 | PIN,12X42.5 | | 2 | 2 | 2 | 2 | |
| 92140 | 92140-0008 | BALL,6.35MM | | 4 | 4 | 4 | 4 | |
| 92145 | 92145-0902 | SPRING,STEP,RETURN | | 2 | 2 | 2 | 2 | |
| 92145A | 92145-1319 | SPRING | | 4 | 4 | 4 | 4 | |
| 92153 | 92153-1938 | BOLT,BANK SENSOR | | 2 | 2 | 2 | 2 | |
| 92200 | 92200-0043 | WASHER,16X26X2.3 | | 2 | 2 | 2 | 2 | |
| 410 | 410AA0600 | WASHER-PLAIN-SMALL | | 2 | 2 | 2 | 2 | |
| 482 | 482EA0100 | CIRCLIP-TYPE-E,10MM | | 2 | 2 | 2 | 2 | |
| 550 | 550S2515 | PIN-COTTER,2.5X15 | | 2 | 2 | 2 | 2 | |

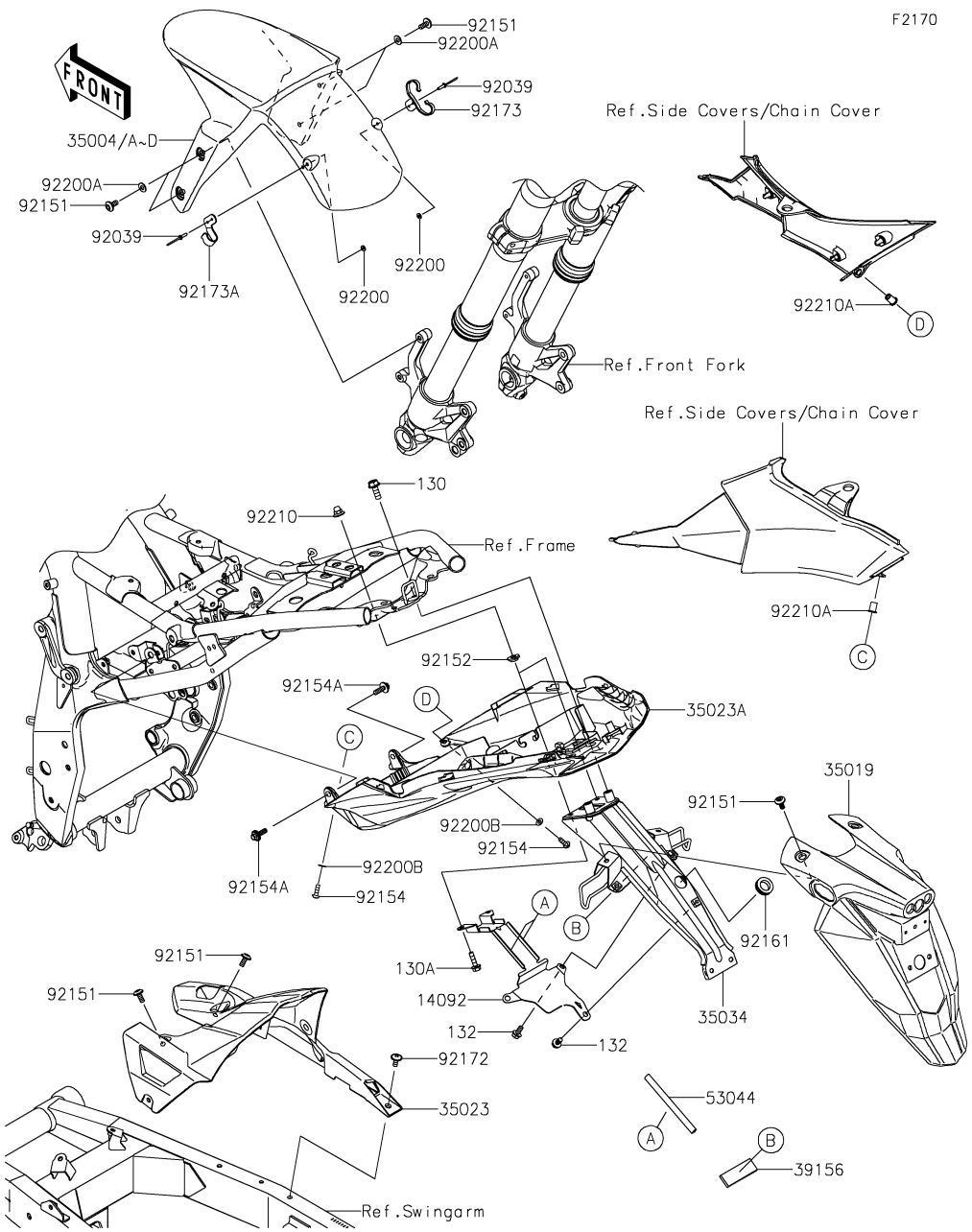


| Ref. No. | Part No. | Description | Spec Code | Quantity-ZR800 '13 ADS | '14 AEF | '15 AFF | '16 AGF | |
|---|---|---|---|---|---|---|---|---|
| 14092 | 14092-0996 | COVER,HARNESS | | 1 | 1 | 1 | 1 | |
| 35004 | 35004-0322-25Y | FENDER-FRONT,P.S.WHITE | | 1 | | 1 | | |
| 35004A | 35004-0322-35K | FENDER-FRONT,C.F.B.GREEN | | | | 1 | | |
| 35004B | 35004-0322-45L | FENDER-FRONT,F.EBONY | | | | 1 | | |
| 35004C | 35004-0322-660 | FENDER-FRONT,M.S.BLACK | | 1 | 1 | | 1 | |
| 35004D | 35004-0322-739 | FENDER-FRONT,M.F.S.BLACK | | | 1 | | | |
| 35019 | 35019-0556 | FLAP,RR | | 1 | 1 | 1 | 1 | |
| 35023 | 35023-0343 | FENDER-REAR,INNER | | 1 | 1 | 1 | 1 | |
| 35023A | 35023-0375 | FENDER-REAR | | 1 | 1 | 1 | 1 | |
| 35034 | 35034-0580 | REINFORCE | | 1 | 1 | 1 | 1 | |
| 39156 | 39156-0950 | PAD,20X60X5 | | 1 | 1 | 1 | 1 | |
| 53044 | 53044-0564 | TRIM | | 2 | 2 | 2 | 2 | |
| 92039 | 92039-1231 | RIVET | | 4 | 4 | 4 | 4 | |
| 92151 | 92151-1654 | BOLT,SOCKET,6X14 | | 8 | 8 | 8 | 8 | |
| 92152 | 92152-1705 | COLLAR,6MM | | 2 | 2 | 2 | 2 | |
| 92154 | 92154-0026 | BOLT,SOCKET,5X16 | | 2 | 2 | 2 | 2 | |
| 92154A | 92154-1268 | BOLT,FLANGED,6X20 | | 2 | 2 | 2 | 2 | |
| 92161 | 92161-0765 | DAMPER | | 1 | 1 | 1 | 1 | |
| 92172 | 92172-0004 | SCREW,6X14 | | 1 | 1 | 1 | 1 | |
| 92173 | 92173-0937 | CLAMP,FR FENDER,RH | | 1 | 1 | 1 | 1 | |
| 92173A | 92173-0972 | CLAMP,FR FENDER,LH | | 1 | 1 | 1 | 1 | |
| 92200 | 92200-1251 | WASHER,3.5X8X1 | | 4 | 4 | 4 | 4 | |
| 92200A | 92200-1388 | WASHER,6.5X14X1 | | 4 | 4 | 4 | 4 | |
| 92200B | 92200-1480 | WASHER,NYLON,5.3X11.5X0.5 | | 2 | 2 | 2 | 2 | |
| 92210 | 92210-0170 | NUT,CAP,6MM | | 2 | 2 | 2 | 2 | |
| 92210A | 92210-0498 | NUT,WELL,5MM | | 2 | 2 | 2 | 2 | |
| 130 | 130BA0618 | BOLT-FLANGED,6X18 | | 2 | 2 | 2 | 2 | |
| 130A | 130BA0622 | BOLT-FLANGED,6X22 | | 2 | 2 | 2 | 2 | |
| 132 | 132BA0612 | BOLT-FLANGED-SMALL,6X12 | | 3 | 3 | 3 | 3 | |

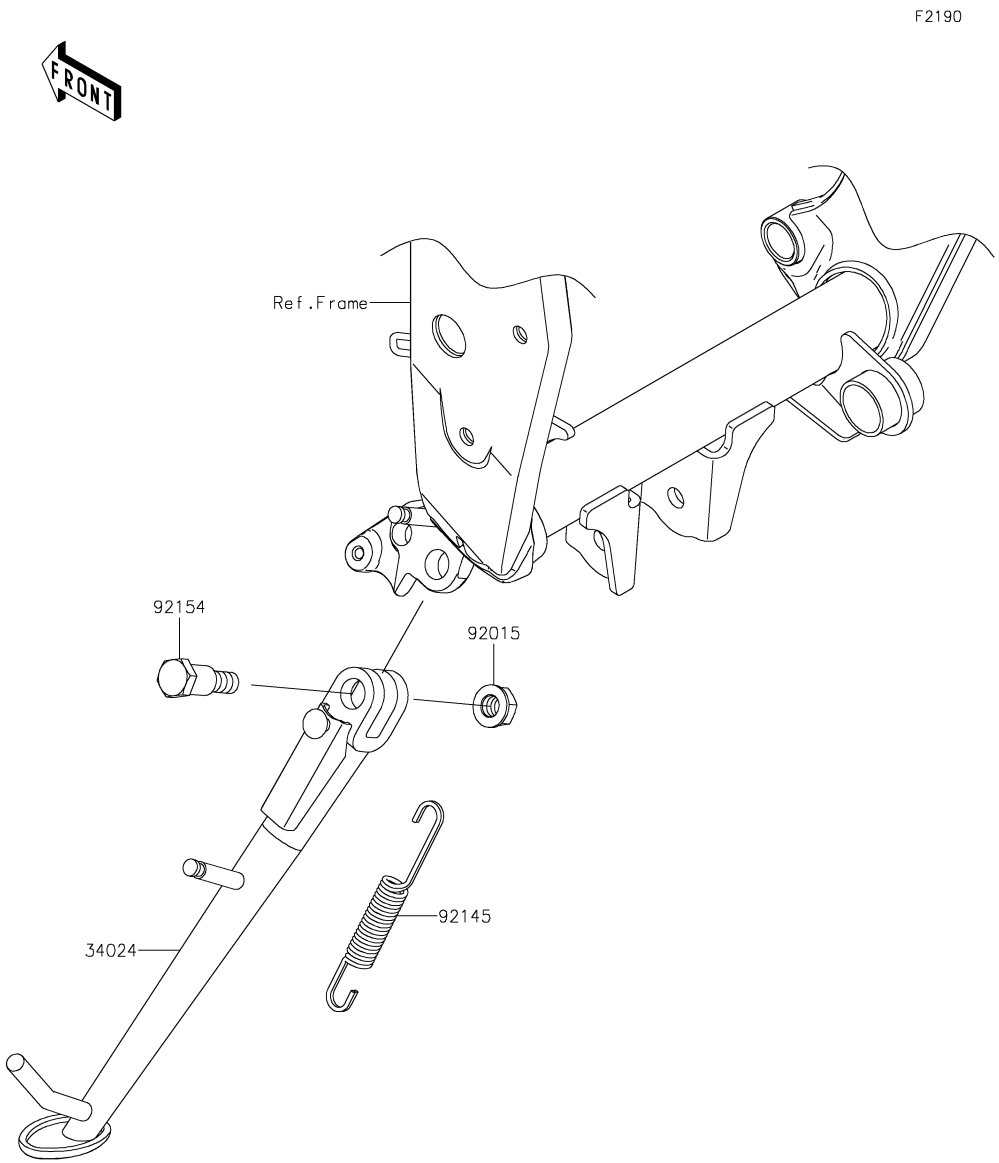


| Ref. No. | Part No. | Description | Spec Code | Quantity-ZR800 '13 ADS | '14 AEF | '15 AFF | '16 AGF | |
|---|---|---|---|---|---|---|---|---|
| 34024 | 34024-0116-18R | STAND-SIDE,F.S.BLACK | | 1 | 1 | 1 | 1 | |
| 92015 | 92015-1717 | NUT,LOCK,FLANGED,10MM | | 1 | 1 | 1 | 1 | |
| 92145 | 92145-0562 | SPRING,SIDE STAND | | 1 | 1 | 1 | 1 | |
| 92154 | 92154-0971 | BOLT,10X39 | | 1 | 1 | 1 | 1 | |

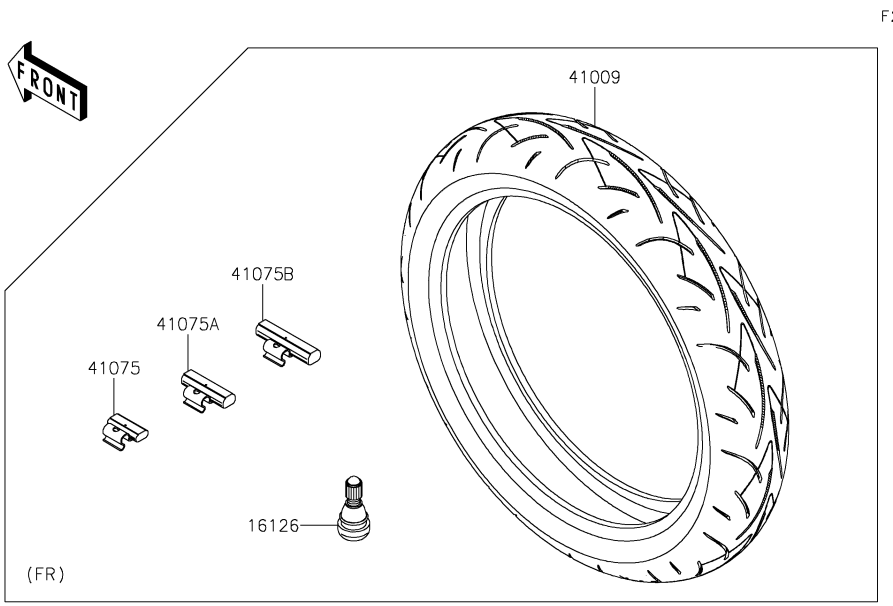


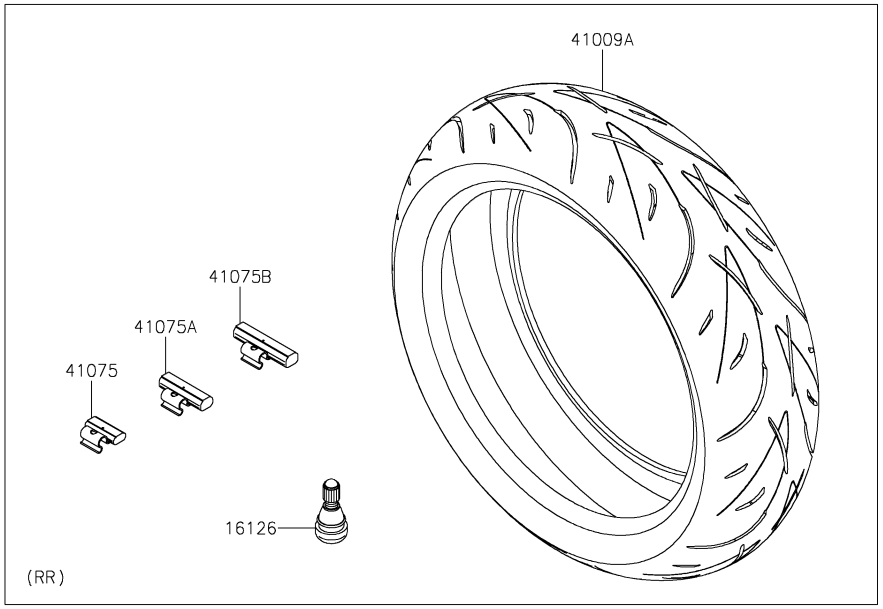


| Ref. No. | Part No. | Description | Spec Code | Quantity-ZR800 '13 ADS | '14 AEF | '15 AFF | '16 AGF | |
|---|---|---|---|---|---|---|---|---|
| 16126 | 16126-1140 | VALVE,TIRE | | 2 | 2 | 2 | 2 | |
| 41009 | 41009-0525 | TIRE,FR,120/70ZR17(58W),D214F | | 1 | 1 | 1 | 1 | |
| 41009A | 41009-0526 | TIRE,RR,180/55ZR17(73W),D214 | | 1 | 1 | 1 | 1 | |
| 41075 | 41075-0007 | BALANCER-WHEEL,10G,SILVER | | AR | AR | AR | AR | |
| 41075A | 41075-0008 | BALANCER-WHEEL,20G,SILVER | | AR | AR | AR | AR | |
| 41075B | 41075-0009 | BALANCER-WHEEL,30G,SILVER | | AR | AR | AR | AR | |

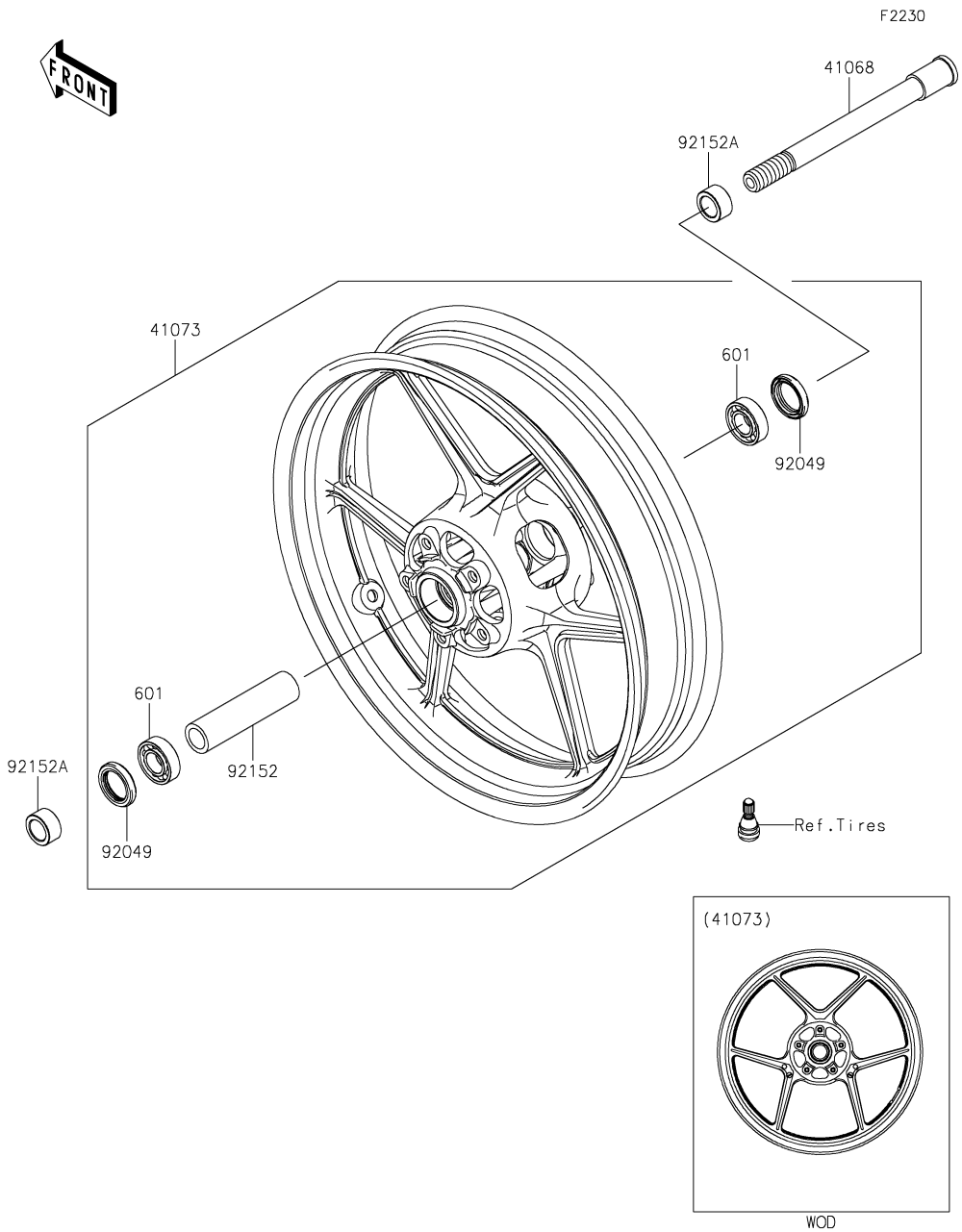


| Ref. No. | Part No. | Description | Spec Code | Quantity-ZR800 '13 ADS | '14 AEF | '15 AFF | '16 AGF | |
|---|---|---|---|---|---|---|---|---|
| 41068 | 41068-0038 | AXLE,FR | | 1 | 1 | 1 | 1 | |
| 41073 | 41073-0595-QT | WHEEL-ASSY,FR,G.BLACK | | 1 | 1 | 1 | 1 | |
| 92049 | 92049-0130 | SEAL-OIL,BJN30427 | | 2 | 2 | 2 | 2 | |
| 92152 | 92152-0087 | COLLAR,FR HUB,L=115 | | 1 | 1 | 1 | 1 | |
| 92152A | 92152-0946 | COLLAR,20X30X15.5 | | 2 | 2 | 2 | 2 | |
| 601 | 601B6004UU | BEARING-BALL,#6004UUC3 | | 2 | 2 | 2 | 2 | |

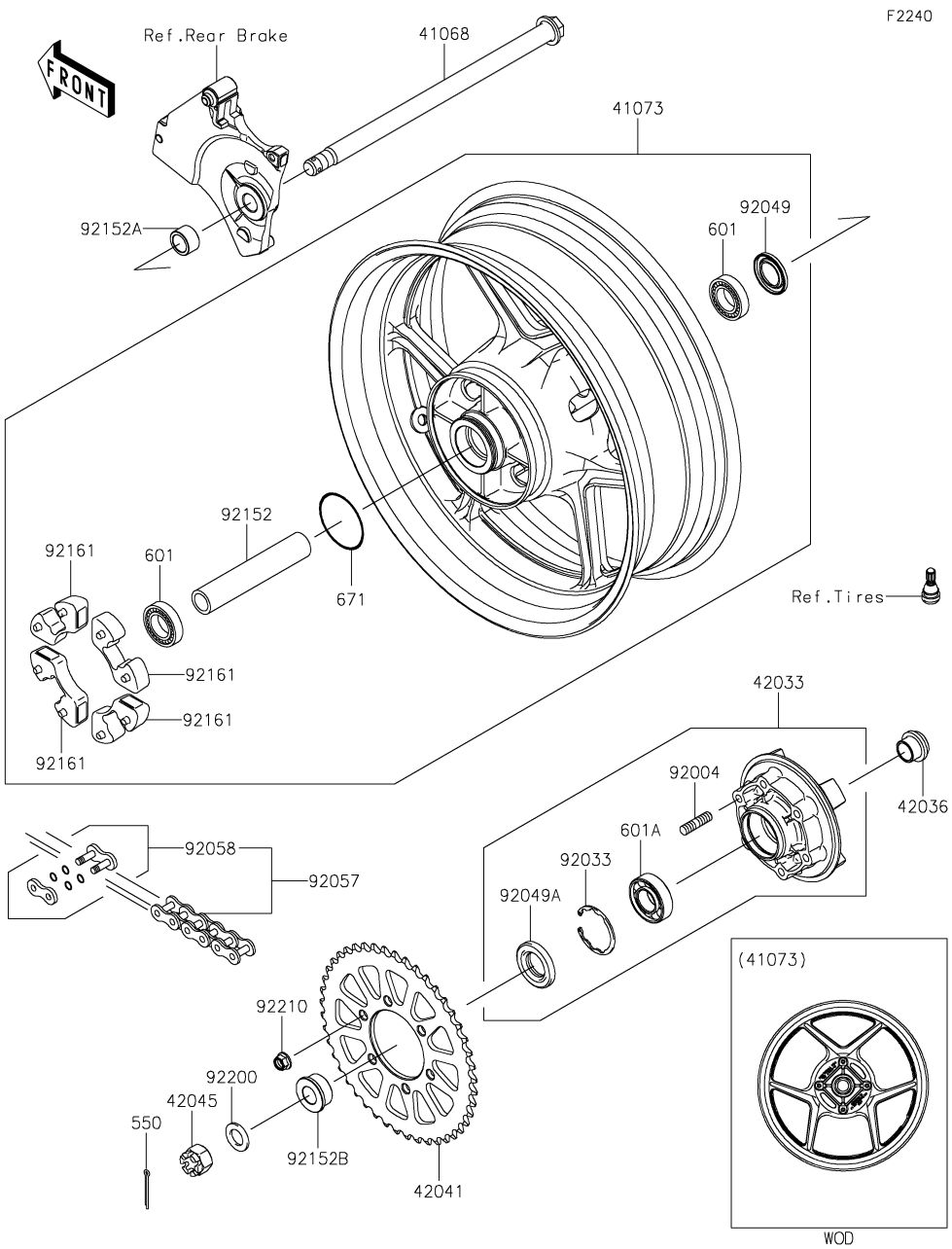


| Ref. No. | Part No. | Description | Spec Code | Quantity-ZR800 '13 ADS | '14 AEF | '15 AFF | '16 AGF | |
|---|---|---|---|---|---|---|---|---|
| 41068 | 41068-0579 | AXLE,RR | | 1 | 1 | 1 | 1 | |
| 41073 | 41073-0593-QT | WHEEL-ASSY,RR,G.BLACK | | 1 | 1 | 1 | 1 | |
| 42033 | 42033-0043 | COUPLING-ASSY,RR HUB | | 1 | 1 | 1 | 1 | |
| 42036 | 42036-1251 | SLEEVE,RR HUB,L=23 | | 1 | 1 | 1 | 1 | |
| 42041 | 42041-0119 | SPROCKET-HUB,45T | | 1 | 1 | 1 | 1 | |
| 42045 | 42045-018 | NUT,CASTLE,18MM | | 1 | 1 | 1 | 1 | |
| 92004 | 92004-0028 | STUD,10X19 | | 6 | 6 | 6 | 6 | |
| 92033 | 92033-1043 | RING-SNAP,52MM | | 1 | 1 | 1 | 1 | |
| 92049 | 92049-0140 | SEAL-OIL,28 47 5 | | 1 | 1 | 1 | 1 | |
| 92049A | 92049-1287 | SEAL-OIL | | 1 | 1 | 1 | 1 | |
| 92057 | 92057-0184 | CHAIN,DRIVE,EK520MVXL2X114L | | 1 | 1 | 1 | 1 | |
| 92058 | 92058-0021 | JOINT-CHAIN,DRIVE | | 1 | 1 | 1 | 1 | |
| 92152 | 92152-0070 | COLLAR,RR HUB,L=150 | | 1 | 1 | 1 | 1 | |
| 92152A | 92152-1583 | COLLAR,20X28X16.4 | | 1 | 1 | 1 | 1 | |
| 92152B | 92152-1585 | COLLAR,20X35X18 | | 1 | 1 | 1 | 1 | |
| 92161 | 92161-0342 | DAMPER,SHOCK,RR HUB | | 4 | 4 | 4 | 4 | |
| 92200 | 92200-1489 | WASHER,19X32X2.6 | | 1 | 1 | 1 | 1 | |
| 92210 | 92210-0276 | NUT,LOCK,FLANGED,10MM | | 6 | 6 | 6 | 6 | |
| 550 | 550AA4035 | PIN-COTTER,4.0X35 | | 1 | 1 | 1 | 1 | |
| 601 | 601B6204UU | BEARING-BALL,6204UUC3 | | 2 | 2 | 2 | 2 | |
| 601A | 601B6205UU | BEARING-BALL | | 1 | 1 | 1 | 1 | |
| 671 | 671B2560 | O RING,60MM | | 1 | 1 | 1 | 1 | |

F2260

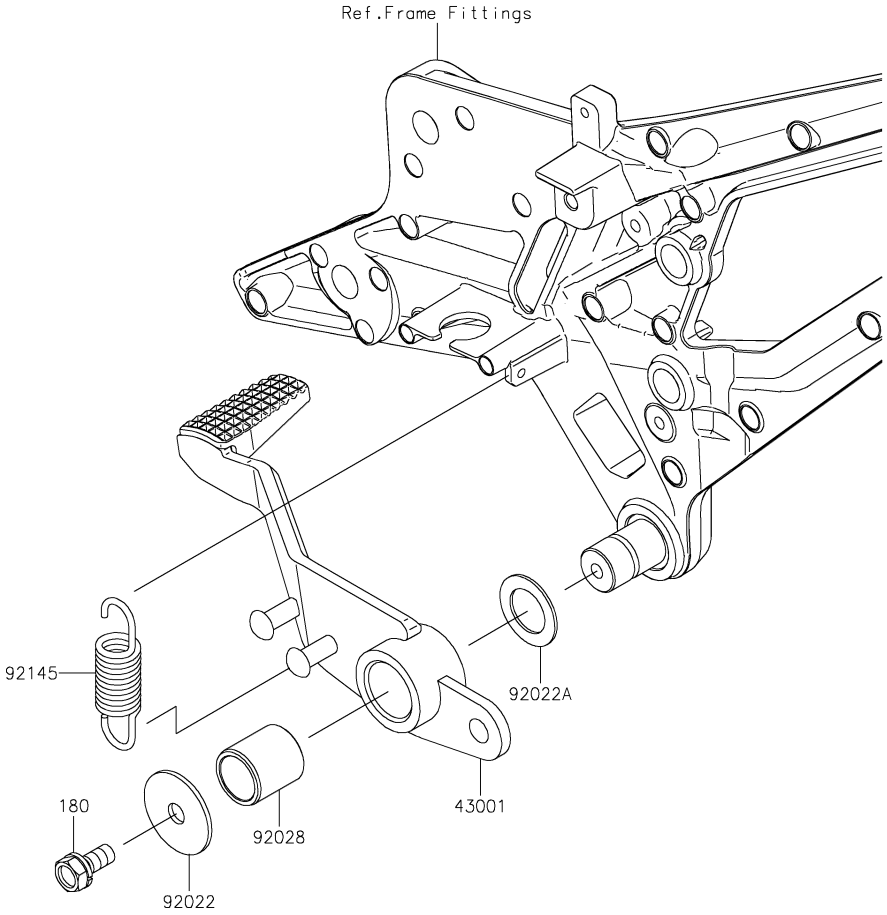


| Ref. No. | Part No. | Description | Spec Code | Quantity-ZR800 '13 ADS | '14 AEF | '15 AFF | '16 AGF | |
|---|---|---|---|---|---|---|---|---|
| 43001 | 43001-0716 | LEVER-BRAKE,PEDAL | | 1 | 1 | 1 | 1 | |
| 92022 | 92022-1282 | WASHER,7X28X1.6 | | 1 | 1 | 1 | 1 | |
| 92022A | 92022-326 | WASHER,15.3X24X1 | | 1 | 1 | 1 | 1 | |
| 92028 | 92028-1282 | BUSHING,BRAKE PEDAL | | 1 | 1 | 1 | 1 | |
| 92145 | 92145-0893 | SPRING,BRAKE PEDAL | | 1 | 1 | 1 | 1 | |
| 180 | 180BA0614 | BOLT-UPSET-WS,6X14 | | 1 | 1 | 1 | 1 | |

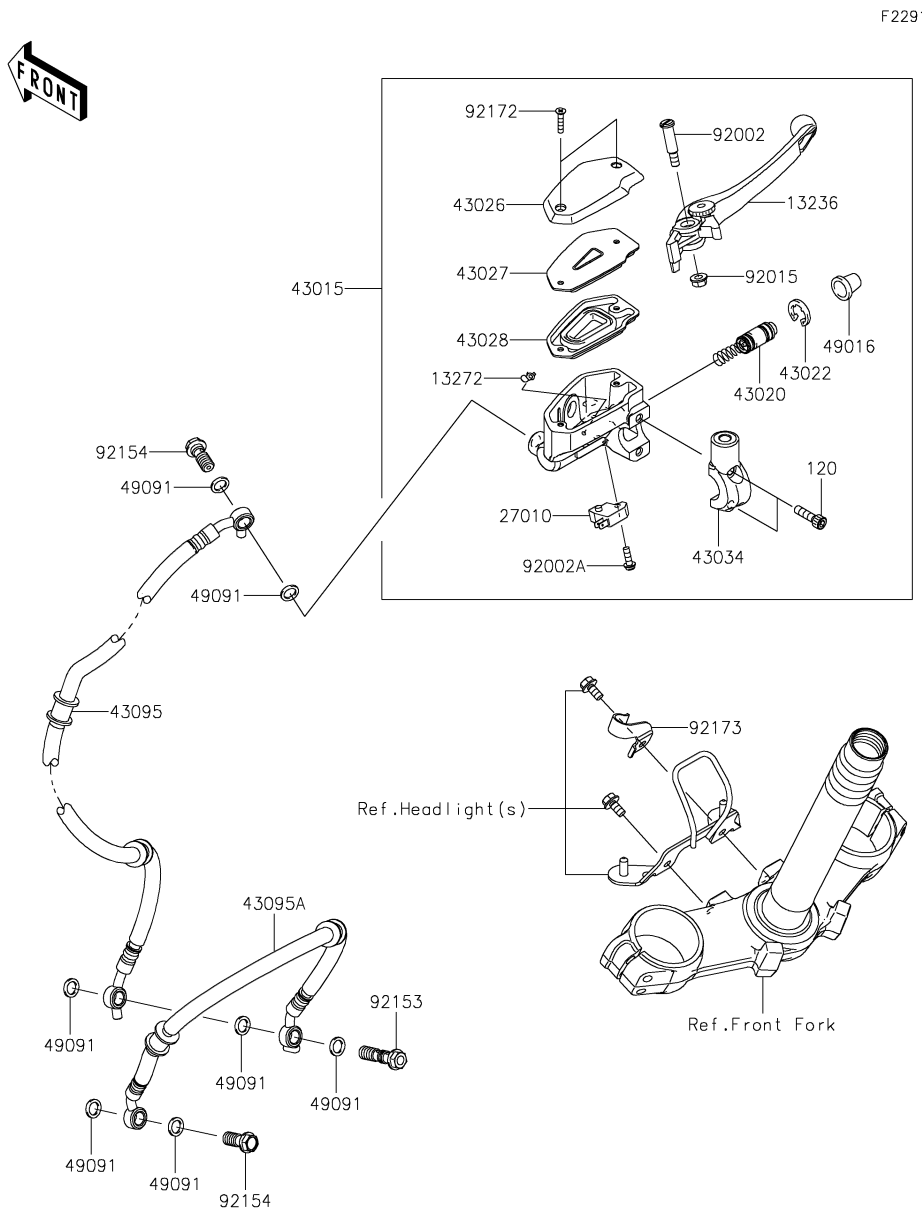


| Ref. No. | Part No. | Description | Spec Code | Quantity-ZR800 '13 ADS | '14 AEF | '15 AFF | '16 AGF | |
|---|---|---|---|---|---|---|---|---|
| 13236 | 13236-0140 | LEVER-COMP,FRONT BRAKE | | 1 | 1 | 1 | 1 | |
| 13272 | 13272-0573 | PLATE | | 1 | 1 | 1 | 1 | |
| 27010 | 27010-0025 | SWITCH,BRAKE | | 1 | 1 | 1 | 1 | |
| 43015 | 43015-0588 | CYLINDER-ASSY-MASTER,FR | | 1 | 1 | 1 | 1 | |
| 43020 | 43020-0008 | PISTON-COMP-BRAKE | | 1 | 1 | 1 | 1 | |
| 43022 | 43022-1010 | STOPPER-BRAKE,PISTON | | 1 | 1 | 1 | 1 | |
| 43026 | 43026-0019 | CAP-BRAKE | | 1 | 1 | 1 | 1 | |
| 43027 | 43027-0008 | PLATE-DIAPHRAGM | | 1 | 1 | 1 | 1 | |
| 43028 | 43028-0015 | DIAPHRAGM | | 1 | 1 | 1 | 1 | |
| 43034 | 43034-0049 | HOLDER-BRAKE,MASTER CYLINDER | | 1 | 1 | 1 | 1 | |
| 43095 | 43095-0708 | HOSE-BRAKE,FR,790MM | | 1 | 1 | 1 | 1 | |
| 43095A | 43095-0709 | HOSE-BRAKE,FR,464MM | | 1 | 1 | 1 | 1 | |
| 49016 | 49016-1044 | COVER-SEAL,MASTER CYLINDER | | 1 | 1 | 1 | 1 | |
| 49091 | 49091-0001 | WASHER-SEAL,10.1X14.5X1.5 | | 7 | 7 | 7 | 7 | |
| 92002 | 92002-1322 | BOLT,LEVER SET,BLACK | | 1 | 1 | 1 | 1 | |
| 92002A | 92002-1323 | BOLT,SCREW,4X12 | | 1 | 1 | 1 | 1 | |
| 92015 | 92015-1528 | NUT,FLANGED,6MM | | 1 | 1 | 1 | 1 | |
| 92153 | 92153-0628 | BOLT,OIL,L=37 | | 1 | 1 | 1 | 1 | |
| 92154 | 92154-0226 | BOLT,OIL,L=23 | | 2 | 2 | 2 | 2 | |
| 92172 | 92172-0320 | SCREW,4X20 | | 2 | 2 | 2 | 2 | |
| 92173 | 92173-0945 | CLAMP | | 1 | 1 | 1 | 1 | |
| 120 | 120CB0622 | BOLT-SOCKET,6X22 | | 2 | 2 | 2 | 2 | |

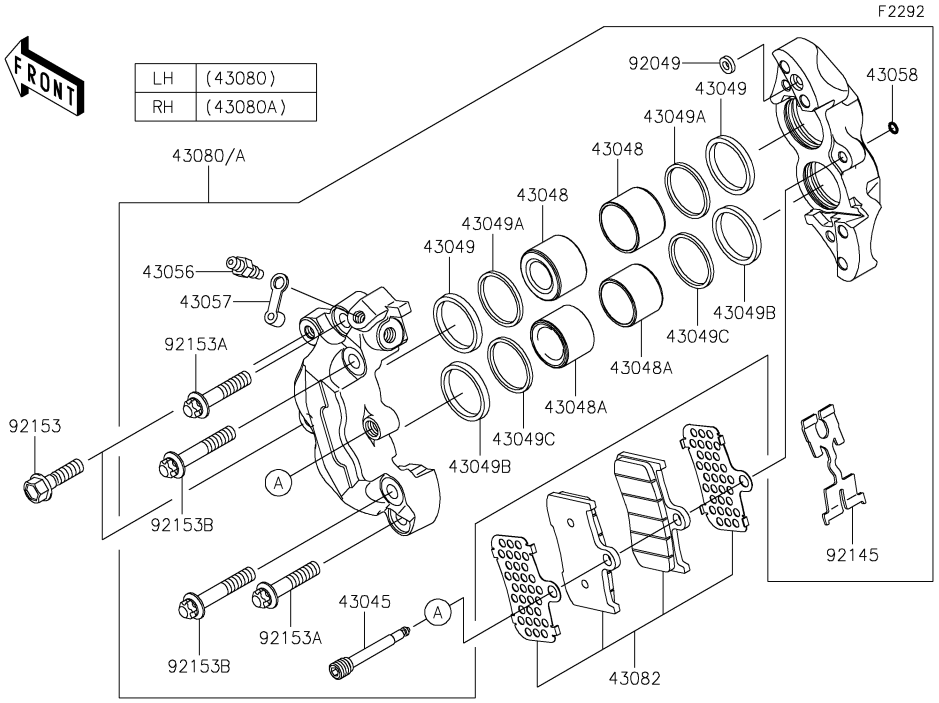


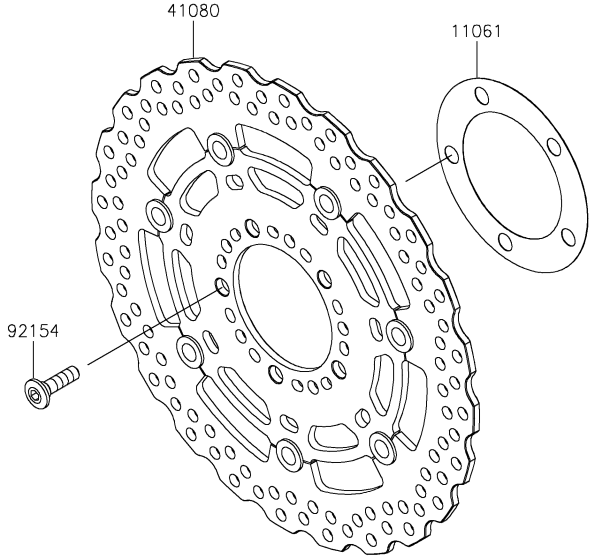


| Ref. No. | Part No. | Description | Spec Code | Quantity-ZR800 '13 ADS | '14 AEF | '15 AFF | '16 AGF | |
|---|---|---|---|---|---|---|---|---|
| 11061 | 11061-0029 | GASKET,DISC PLATE | | 2 | 2 | 2 | 2 | |
| 41080 | 41080-0577-5C | DISC,FR,HOUSING+DISC BLK/SIL | | 2 | 2 | 2 | 2 | |
| 43045 | 43045-1053 | SHAFT-CALIPER | | 2 | 2 | 2 | 2 | |
| 43048 | 43048-0001 | PISTON-CALIPER | | 4 | 4 | 4 | 4 | |
| 43048A | 43048-0021 | PISTON-CALIPER | | 4 | 4 | 4 | 4 | |
| 43049 | 43049-0006 | PACKING | | 4 | 4 | 4 | 4 | |
| 43049A | 43049-0007 | PACKING | | 4 | 4 | 4 | 4 | |
| 43049B | 43049-0030 | PACKING | | 4 | 4 | 4 | 4 | |
| 43049C | 43049-0031 | PACKING | | 4 | 4 | 4 | 4 | |
| 43056 | 43056-1055 | BREATHER | | 2 | 2 | 2 | 2 | |
| 43057 | 43057-1001 | CAP-BREATHER | | 2 | 2 | 2 | 2 | |
| 43058 | 43058-1100 | RING,STOPPER | | 2 | 2 | 2 | 2 | |
| 43080 | 43080-0130-DJ | CALIPER-SUB-ASSY,FR,LH,BLACK | | 1 | 1 | 1 | 1 | |
| 43080A | 43080-0131-DJ | CALIPER-SUB-ASSY,FR,RH,BLACK | | 1 | 1 | 1 | 1 | |
| 43082 | 43082-0129 | PAD-ASSY-BRAKE | | 2 | 2 | 2 | 2 | |
| 92049 | 92049-1448 | SEAL-OIL | | 2 | 2 | 2 | 2 | |
| 92145 | 92145-0184 | SPRING,PAD | | 2 | 2 | 2 | 2 | |
| 92153 | 92153-1089 | BOLT,FLANGED,8X30 | | 4 | 4 | 4 | 4 | |
| 92153A | 92153-1093 | BOLT,TORX,8X38 | | 4 | 4 | 4 | 4 | |
| 92153B | 92153-1094 | BOLT,TORX,8X45 | | 4 | 4 | 4 | 4 | |
| 92154 | 92154-0844 | BOLT,SOCKET,8X30 | | 10 | 10 | 10 | 10 | |

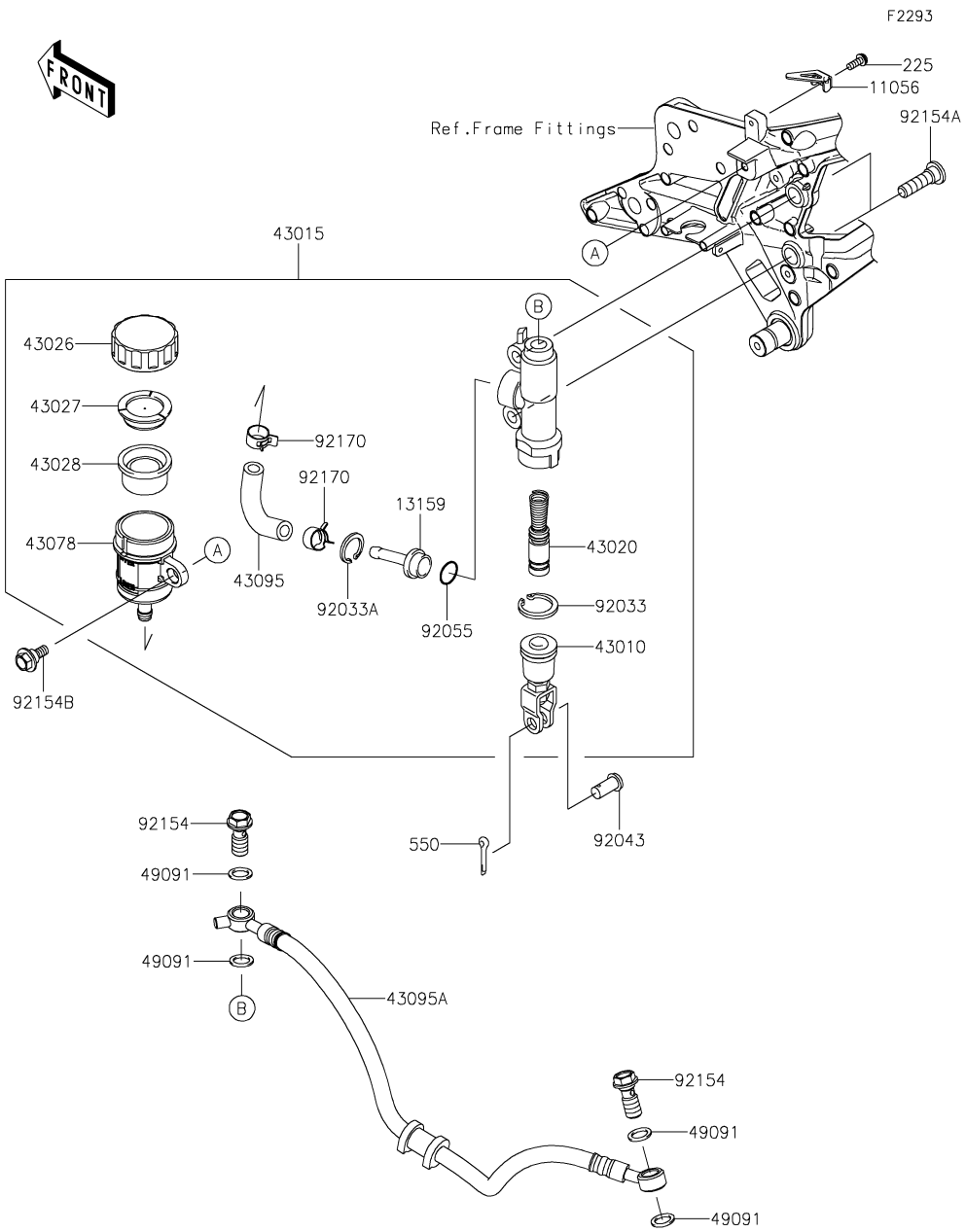


| Ref. No. | Part No. | Description | Spec Code | Quantity-ZR800 '13 ADS | '14 AEF | '15 AFF | '16 AGF | |
|---|---|---|---|---|---|---|---|---|
| 11056 | 11056-1904 | BRACKET,GUARD | | 1 | 1 | 1 | 1 | |
| 13159 | 13159-0009 | CONNECTOR | | 1 | 1 | 1 | 1 | |
| 43010 | 43010-0009 | ROD-ASSY-BRAKE | | 1 | 1 | 1 | 1 | |
| 43015 | 43015-0574 | CYLINDER-ASSY-MASTER,RR | | 1 | 1 | 1 | 1 | |
| 43020 | 43020-1094 | PISTON-COMP-BRAKE | | 1 | 1 | 1 | 1 | |
| 43026 | 43026-0009 | CAP-BRAKE | | 1 | 1 | 1 | 1 | |
| 43027 | 43027-1053 | PLATE-DIAPHRAGM | | 1 | 1 | 1 | 1 | |
| 43028 | 43028-1065 | DIAPHRAGM | | 1 | 1 | 1 | 1 | |
| 43078 | 43078-0060 | RESERVOIR | | 1 | 1 | 1 | 1 | |
| 43095 | 43095-0585 | HOSE-BRAKE,RESERVOIR | | 1 | 1 | 1 | 1 | |
| 43095A | 43095-0710 | HOSE-BRAKE,RR,469MM | | 1 | 1 | 1 | 1 | |
| 49091 | 49091-0001 | WASHER-SEAL,10.1X14.5X1.5 | | 4 | 4 | 4 | 4 | |
| 92033 | 92033-0079 | RING-SNAP,20.9X24.6X1.2 | | 1 | 1 | 1 | 1 | |
| 92033A | 92033-1186 | RING-SNAP,20.5MM | | 1 | 1 | 1 | 1 | |
| 92043 | 92043-0104 | PIN,8X17 | | 1 | 1 | 1 | 1 | |
| 92055 | 92055-0741 | RING-O,14.8X2.4 | | 1 | 1 | 1 | 1 | |
| 92154 | 92154-0226 | BOLT,OIL,L=23 | | 2 | 2 | 2 | 2 | |
| 92154A | 92154-0843 | BOLT,SOCKET,8X30 | | 2 | 2 | 2 | 2 | |
| 92154B | 92154-0929 | BOLT | | 1 | 1 | 1 | 1 | |
| 92170 | 92170-1091 | CLAMP,HOSE | | 2 | 2 | 2 | 2 | |
| 225 | 225AB0412 | SCREW-PAN-WSP-CROS,4X12 | | 1 | 1 | 1 | 1 | |
| 550 | 550AA2015 | PIN-COTTER,2.0X15 | | 1 | 1 | 1 | 1 | |

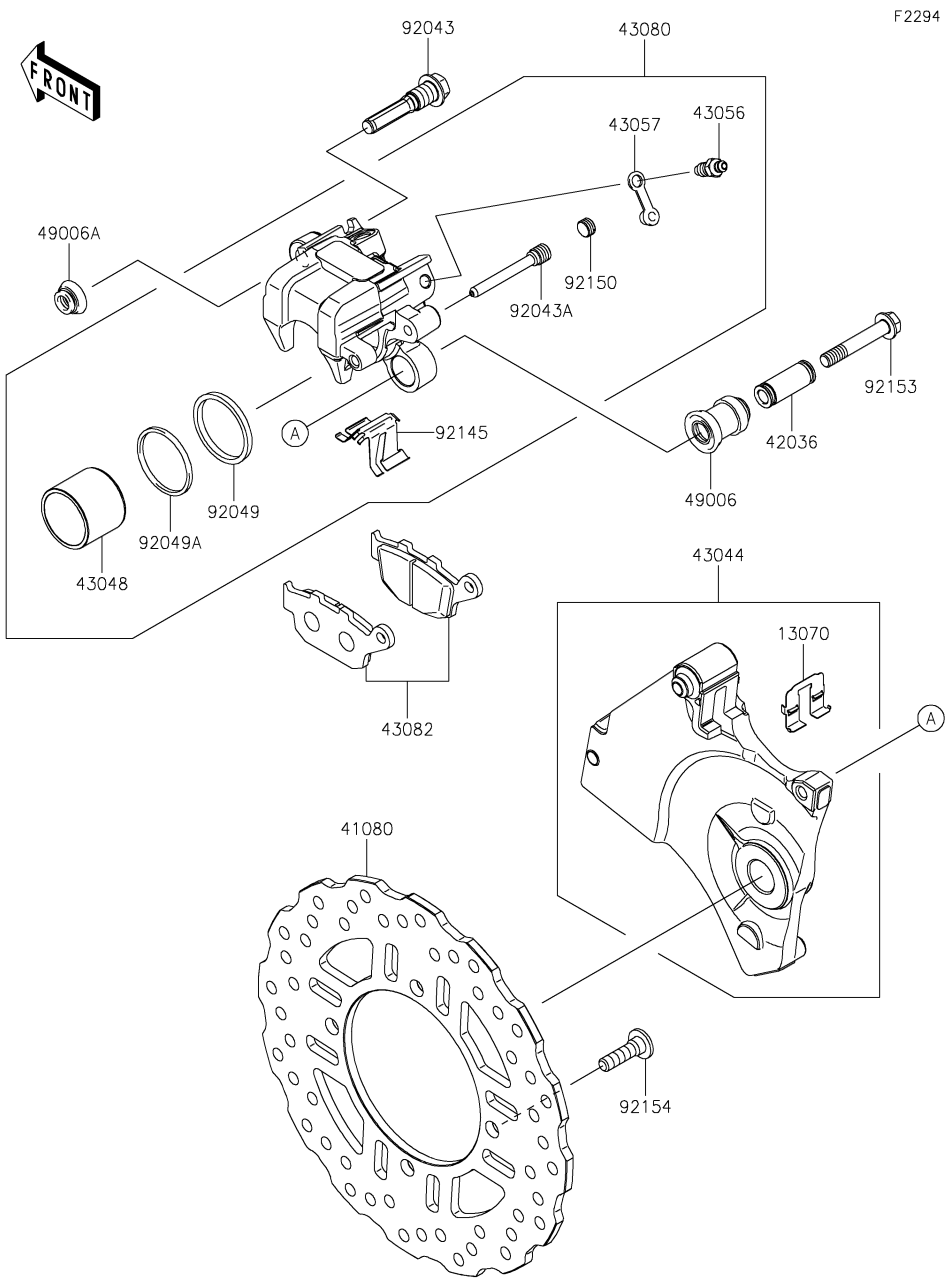


| Ref. No. | Part No. | Description | Spec Code | Quantity-ZR800 '13 ADS | '14 AEF | '15 AFF | '16 AGF | |
|---|---|---|---|---|---|---|---|---|
| 13070 | 13070-0714 | GUIDE,BRAKE PAD | | 1 | 1 | 1 | 1 | |
| 41080 | 41080-0576 | DISC,RR | | 1 | 1 | 1 | 1 | |
| 42036 | 42036-0050 | SLEEVE | | 1 | 1 | 1 | 1 | |
| 43044 | 43044-0071 | HOLDER-COMP-CALIPER | | 1 | 1 | 1 | 1 | |
| 43048 | 43048-0008 | PISTON-CALIPER | | 1 | 1 | 1 | 1 | |
| 43056 | 43056-1055 | BREATHER | | 1 | 1 | 1 | 1 | |
| 43057 | 43057-1001 | CAP-BREATHER | | 1 | 1 | 1 | 1 | |
| 43080 | 43080-0050-DJ | CALIPER-SUB-ASSY,RR,BLACK | | 1 | 1 | 1 | 1 | |
| 43082 | 43082-0117 | PAD-ASSY-BRAKE | | 1 | 1 | 1 | 1 | |
| 49006 | 49006-0058 | BOOT | | 1 | 1 | 1 | 1 | |
| 49006A | 49006-1242 | BOOT,CALIPER | | 1 | 1 | 1 | 1 | |
| 92043 | 92043-0137 | PIN | | 1 | 1 | 1 | 1 | |
| 92043A | 92043-1520 | PIN,HANGER | | 1 | 1 | 1 | 1 | |
| 92049 | 92049-1449 | SEAL-OIL | | 1 | 1 | 1 | 1 | |
| 92049A | 92049-1450 | SEAL-OIL | | 1 | 1 | 1 | 1 | |
| 92145 | 92145-0493 | SPRING,PAD | | 1 | 1 | 1 | 1 | |
| 92150 | 92150-1692 | BOLT,PLUG | | 1 | 1 | 1 | 1 | |
| 92153 | 92153-1826 | BOLT,FLANGED | | 1 | 1 | 1 | 1 | |
| 92154 | 92154-0844 | BOLT,SOCKET,8X30 | | 4 | 4 | 4 | 4 | |

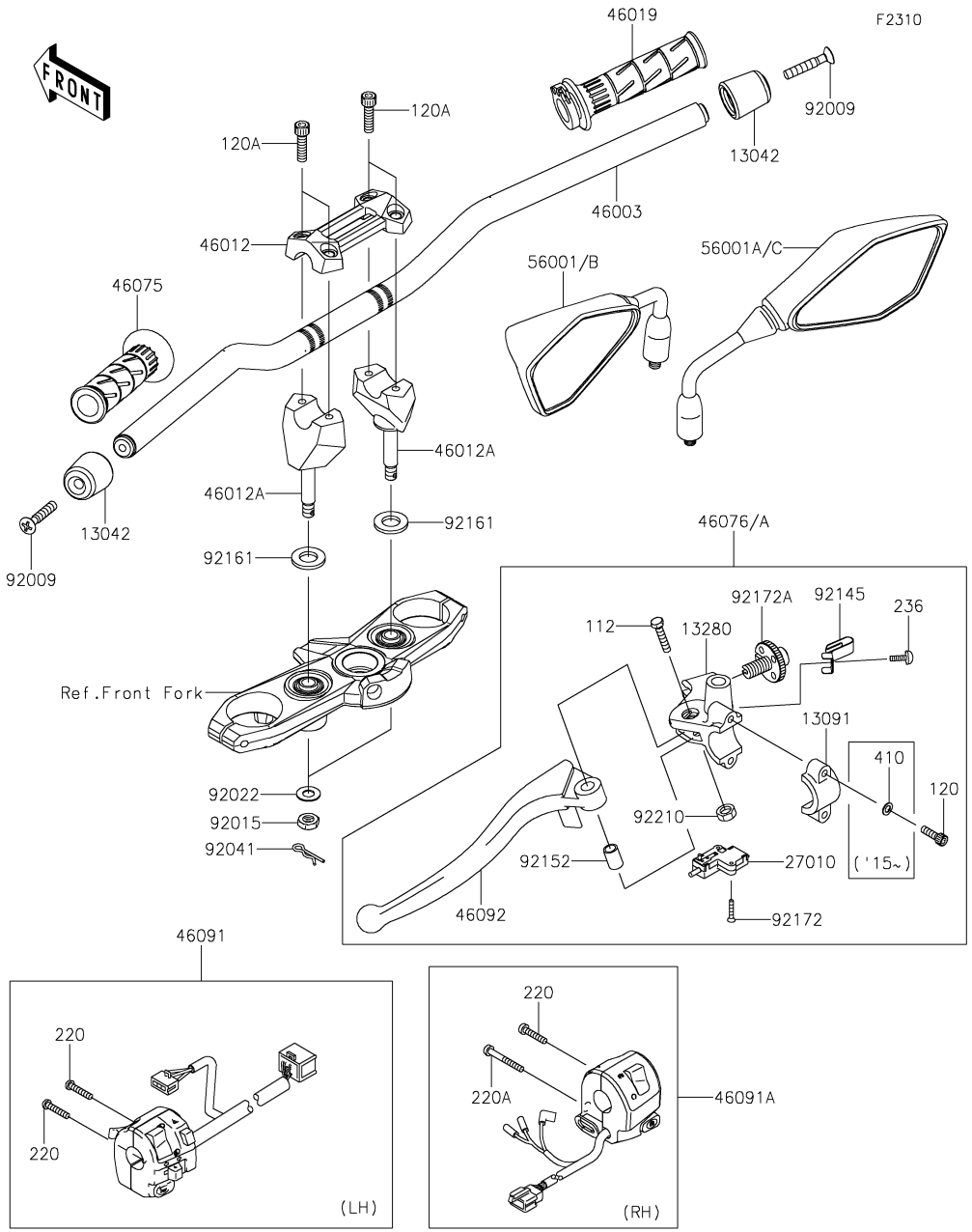


| Ref. No. | Part No. | Description | Spec Code | Quantity-ZR800 '13 ADS | '14 AEF | '15 AFF | '16 AGF | |
|---|---|---|---|---|---|---|---|---|
| 13042 | 13042-1005 | WEIGHT,HANDLE | | 2 | 2 | 2 | 2 | |
| 13091 | 13091-1624 | HOLDER,CLUTCH LEVER | | 1 | 1 | 1 | 1 | |
| 13280 | 13280-0017 | HOLDER,CLUTCH LEVER | | 1 | 1 | 1 | 1 | |
| 27010 | 27010-0729 | SWITCH,CLUTCH | | 1 | 1 | 1 | 1 | |
| 46003 | 46003-0583-18R | HANDLE,F.S.BLACK | | 1 | 1 | 1 | 1 | |
| 46012 | 46012-0314 | HOLDER-HANDLE,UPP | | 1 | 1 | 1 | 1 | |
| 46012A | 46012-0315 | HOLDER-HANDLE,LWR | | 2 | 2 | 2 | 2 | |
| 46019 | 46019-0060 | GRIP-ASSY,THROTTLE | | 1 | 1 | 1 | 1 | |
| 46075 | 46075-0564 | GRIP,HANDLE,LH | | 1 | 1 | 1 | 1 | |
| 46076 | 46076-0080 | LEVER-ASSY-GRIP,CLUTCH | | 1 | 1 | | | |
| 46076A | 46076-0102 | LEVER-ASSY-GRIP,CLUTCH | | | | 1 | 1 | |
| 46091 | 46091-0248 | HOUSING-ASSY-CONTROL,LH | | 1 | 1 | 1 | 1 | |
| 46091A | 46091-0257 | HOUSING-ASSY-CONTROL,RH | | 1 | 1 | 1 | 1 | |
| 46092 | 46092-0003 | LEVER-GRIP,CLUTCH | | 1 | 1 | 1 | 1 | |
| 56001 | 56001-0243 | MIRROR-ASSY,LH | | 1 | 1 | | | |
| 56001A | 56001-0244 | MIRROR-ASSY,RH | | 1 | 1 | | | |
| 56001B | 56001-0299 | MIRROR-ASSY,LH | | | | 1 | 1 | |
| 56001C | 56001-0300 | MIRROR-ASSY,RH | | | | 1 | 1 | |
| 92009 | 92009-1257 | SCREW,8X45 | | 2 | 2 | 2 | 2 | |
| 92015 | 92015-1962 | NUT,LOCK,10MM | | 2 | 2 | 2 | 2 | |
| 92022 | 92022-1088 | WASHER,10.2X28X2 | | 2 | 2 | 2 | 2 | |
| 92041 | 92041-1060 | COTTER,8MM | | 2 | 2 | 2 | 2 | |
| 92145 | 92145-1286 | SPRING | | 1 | 1 | 1 | 1 | |
| 92152 | 92152-0103 | COLLAR | | 1 | 1 | 1 | 1 | |
| 92161 | 92161-0037 | DAMPER | | 2 | 2 | 2 | 2 | |
| 92172 | 92172-0183 | SCREW,3X16 | | 2 | 2 | 2 | 2 | |
| 92172A | 92172-1060 | SCREW,ADJUST NUT | | 1 | 1 | 1 | 1 | |
| 92210 | 92210-0006 | NUT,LOCK,6MM | | 1 | 1 | 1 | 1 | |
| 112 | 112BB0630 | BOLT-UPSET,6X30 | | 1 | 1 | 1 | 1 | |
| 120 | 120CB0620 | BOLT-SOCKET,6X20 | | 2 | 2 | 2 | 2 | |
| 120A | 120CC0830 | BOLT-SOCKET,8X30 | | 4 | 4 | 4 | 4 | |
| 220 | 220AB0525 | SCREW-PAN-CROS,5X25 | | 3 | 3 | 3 | 3 | |
| 220A | 220AB0540 | SCREW-PAN-CROS,5X40 | | 1 | 1 | 1 | 1 | |
| 236 | 236AB0410 | SCREW-PAN-WSP-CROS,4X10 | | 1 | 1 | 1 | 1 | |
| 410 | 410AB0600 | WASHER-PLAIN-SMALL,6MM | | | | 2 | 2 | |

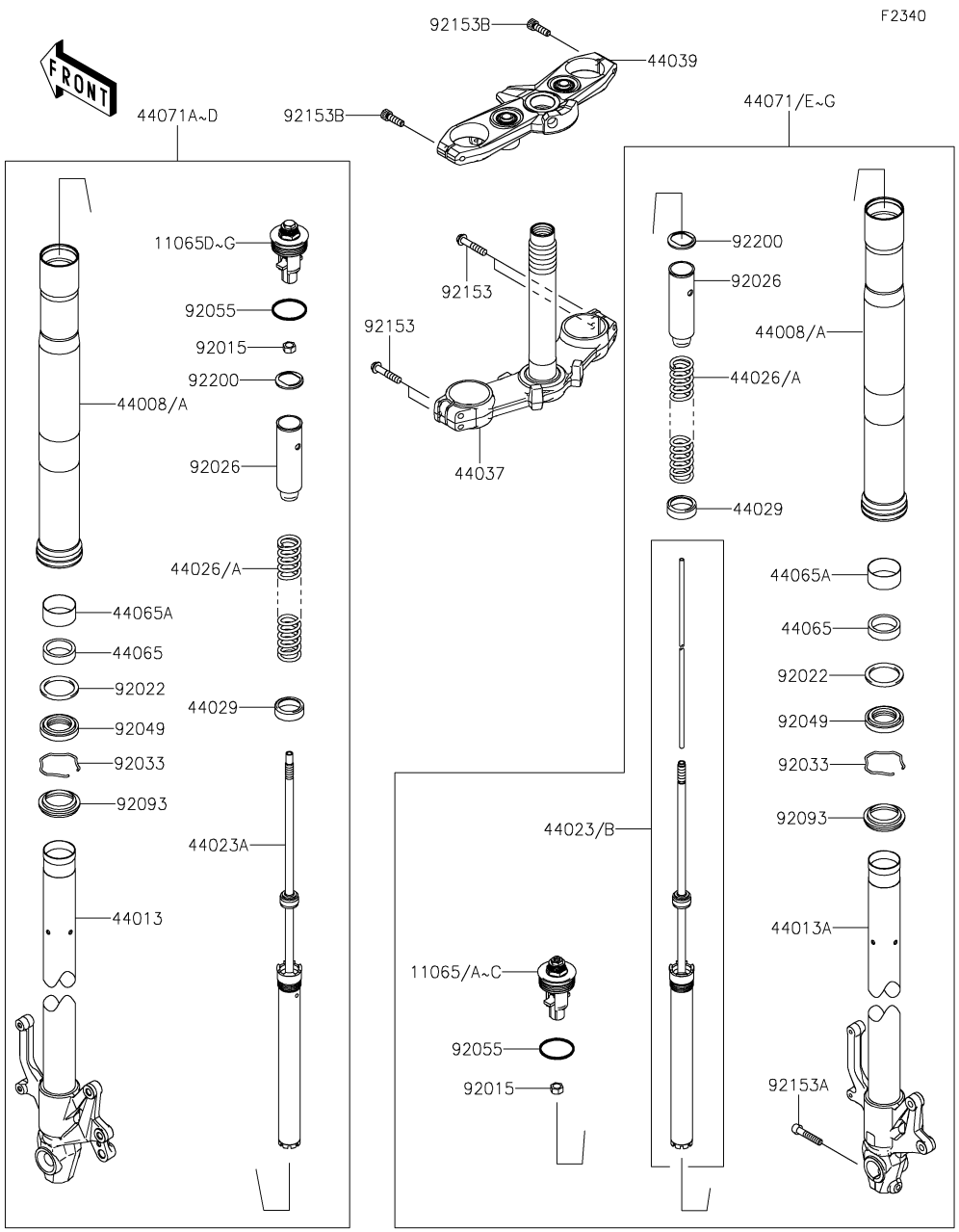


| Ref. No. | Part No. | Description | Spec Code | Quantity-ZR800 '13 ADS | '14 AEF | '15 AFF | '16 AGF | |
|---|---|---|---|---|---|---|---|---|
| 11065 | 11065-0781-10B | CAP,COMP.,RH,P.RED | | 1 | 1 | | | |
| 11065A | 11065-0781-48W | CAP,COMP.,RH,G.B.GREEN | | | | 1 | | |
| 11065B | 11065-0781-50Y | CAP,COMP,RH,G.B.GREEN | | | | | 1 | |
| 11065C | 11065-0781-56N | CAP,COMP,RH,D.RED | | | | | 1 | |
| 11065D | 11065-0782-10B | CAP,COMP.,LH,P.RED | | 1 | 1 | | | |
| 11065E | 11065-0782-48W | CAP,COMP.,LH,G.B.GREEN | | | | 1 | | |
| 11065F | 11065-0782-50Y | CAP,COMP,LH,G.B.GREEN | | | | | 1 | |
| 11065G | 11065-0782-56N | CAP,COMP,LH,D.RED | | | | | 1 | |
| 44008 | 44008-0062-499 | PIPE-FORK OUTER,A.BLACK | | 2 | 2 | 2 | 2 | |
| 44008A | 44008-0062-56N | PIPE-FORK OUTER,D.RED | | | | | 2 | |
| 44013 | 44013-0195-18R | PIPE-FORK INNER,LH,F.S.BLACK | | 1 | 1 | 1 | 1 | |
| 44013A | 44013-0196-18R | PIPE-FORK INNER,RH,F.S.BLACK | | 1 | 1 | 1 | 1 | |
| 44023 | 44023-0107 | CYLINDER-SET-FORK,RH | | 1 | 1 | | | |
| 44023A | 44023-0112 | CYLINDER-SET-FORK,LH | | 1 | 1 | 1 | 1 | |
| 44023B | 44023-0124 | CYLINDER-SET-FORK,RH | | | | 1 | 1 | |
| 44026 | 44026-0171 | SPRING-FRONT FORK | | 2 | 2 | | | |
| 44026A | 44026-0193 | SPRING-FRONT FORK | | | | 2 | 2 | |
| 44029 | 44029-0015 | SEAT-FORK SPRING | | 2 | 2 | 2 | 2 | |
| 44037 | 44037-0066-26M | HOLDER-FORK UNDER,F.M.GRAY | | 1 | 1 | 1 | 1 | |
| 44039 | 44039-0130-26M | HOLDER-FORK UPPER,F.M.GRAY | | 1 | 1 | 1 | 1 | |
| 44065 | 44065-0042 | BUSHING-FRONT FORK | | 2 | 2 | 2 | 2 | |
| 44065A | 44065-1114 | BUSHING-FRONT FORK,INNER PIPE | | 2 | 2 | 2 | 2 | |
| 44071 | 44071-0850-48C | DAMPER-ASSY,FORK,RH.BLACK | | 1 | 1 | | | |
| 44071A | 44071-0895-48C | DAMPER-ASSY,FORK,LH.BLACK | | 1 | 1 | | | |
| 44071B | 44071-1103-50M | DAMPER-ASSY,FORK,LH,BLACK | | | | 1 | | |
| 44071C | 44071-1103-56Q | DAMPER-ASSY,FORK,LH,BLACK | | | | | 1 | |
| 44071D | 44071-1103-56R | DAMPER-ASSY,FORK,LH,D.RED | | | | | 1 | |
| 44071E | 44071-1104-50M | DAMPER-ASSY,FORK,RH,BLACK | | | | 1 | | |
| 44071F | 44071-1104-56Q | DAMPER-ASSY,FORK,RH,BLACK | | | | | 1 | |
| 44071G | 44071-1104-56R | DAMPER-ASSY,FORK,RH,D.RED | | | | | 1 | |

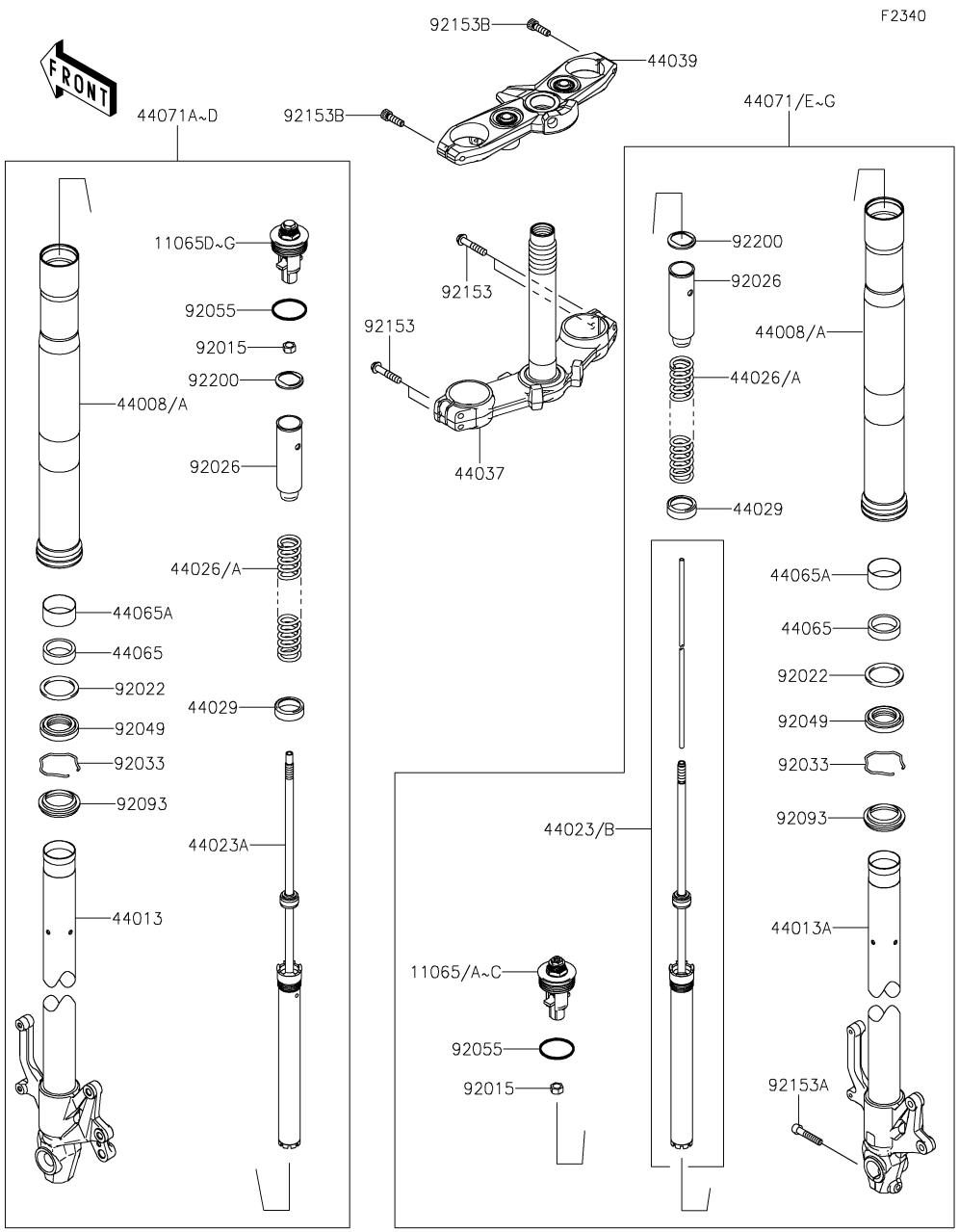


| Ref. No. | Part No. | Description | Spec Code | Quantity-ZR800 '13 ADS | '14 AEF | '15 AFF | '16 AGF | |
|---|---|---|---|---|---|---|---|---|
| 92015 | 92015-1795 | NUT | | 2 | 2 | 2 | 2 | |
| 92022 | 92022-1298 | WASHER,FORK OUTER TUBE | | 2 | 2 | 2 | 2 | |
| 92026 | 92026-0045 | SPACER,FORK | | 2 | 2 | 2 | 2 | |
| 92033 | 92033-1036 | RING-SNAP | | 2 | 2 | 2 | 2 | |
| 92049 | 92049-0073 | SEAL-OIL | | 2 | 2 | 2 | 2 | |
| 92055 | 92055-1333 | RING-O,FORK,AIR TUBE | | 2 | 2 | 2 | 2 | |
| 92093 | 92093-1472 | SEAL,FORK OUTER TUBE | | 2 | 2 | 2 | 2 | |
| 92153 | 92153-0484 | BOLT,FLANGED,8X40 | | 4 | 4 | 4 | 4 | |
| 92153A | 92153-0506 | BOLT,SOCKET,8X40 | | 1 | 1 | 1 | 1 | |
| 92153B | 92153-1625 | BOLT,SOCKET,8X25 | | 2 | 2 | 2 | 2 | |
| 92200 | 92200-0085 | WASHER | | 2 | 2 | 2 | 2 | |

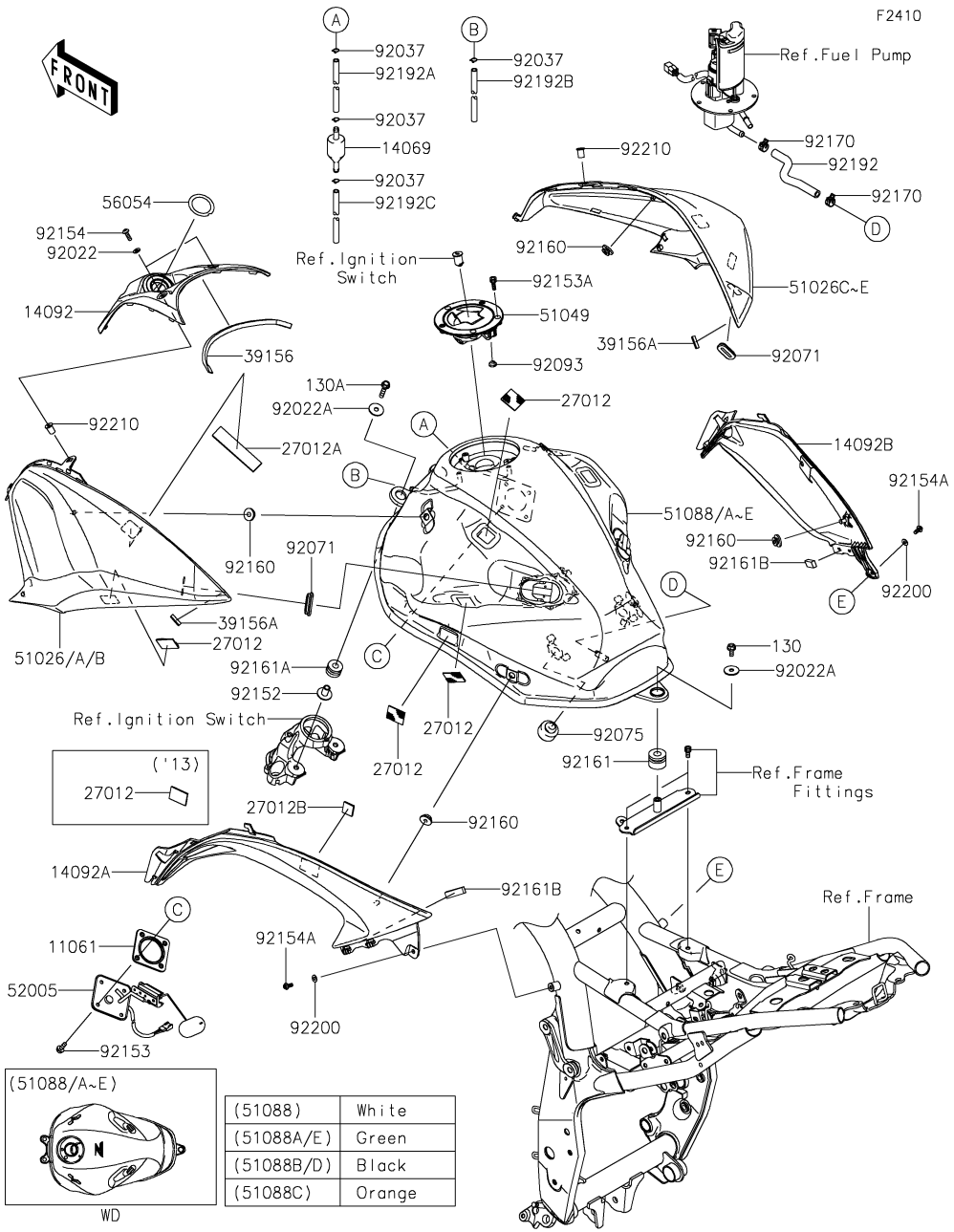


| Ref. No. | Part No. | Description | Spec Code | Quantity-ZR800 '13 ADS | '14 AEF | '15 AFF | '16 AGF | |
|---|---|---|---|---|---|---|---|---|
| 11061 | 11061-0797 | GASKET,FUEL GAUGE | | 1 | 1 | | | |
| 14069 | 14069-0008 | BREATHER,TANK | | 1 | 1 | | | |
| 14092 | 14092-1090 | COVER,IGNITION SWITCH | | 1 | 1 | | | |
| 14092A | 14092-1091 | COVER,KNEE GRIP,LH | | 1 | 1 | | | |
| 14092B | 14092-1092 | COVER,KNEE GRIP,RH | | 1 | 1 | | | |
| 27012 | 27012-0170 | HOOK | | 10 | 8 | | | |
| 27012A | 27012-0746 | HOOK,DUAL LOCK,20X90 | | 2 | 2 | | | |
| 27012B | 27012-0772 | HOOK,20X20X3.0 | | | 2 | | | |
| 39156 | 39156-0995 | PAD,IGNITION SWITCH | | 1 | 1 | | | |
| 39156A | 39156-0999 | PAD,5X20X3 | | 2 | 2 | | | |
| 51026 | 51026-0053-35L | COVER TANK,LH,F.EBONY | | 1 | | | | |
| 51026A | 51026-0053-660 | COVER TANK,LH,M.S.BLACK | | 1 | 1 | | | |
| 51026B | 51026-0053-739 | COVER TANK,LH,M.F.S.BLACK | | | 1 | | | |
| 51026C | 51026-0054-35L | COVER TANK,RH,F.EBONY | | 1 | | | | |
| 51026D | 51026-0054-660 | COVER TANK,RH,M.S.BLACK | | 1 | 1 | | | |
| 51026E | 51026-0054-739 | COVER TANK,RH,M.F.S.BLACK | | | 1 | | | |
| 51049 | 51049-0714 | CAP-TANK,FUEL | | 1 | 1 | | | |
| 51088 | 51088-5004-15S | TANK-COMP-FUEL,P.S.WHITE | | 1 | | | | |
| 51088A | 51088-5005-35K | TANK-COMP-FUEL,C.F.B.GREEN | | 1 | | | | |
| 51088B | 51088-5012-15Z | TANK-COMP-FUEL,M.S.BLACK | | 1 | | | | |
| 51088C | 51088-5254-15T | TANK-COMP-FUEL,C.B.ORANGE | | | 1 | | | |
| 51088D | 51088-5256-660 | TANK-COMP-FUEL,M.S.BLACK | | | 1 | | | |
| 51088E | 51088-5259-35K | TANK-COMP-FUEL,C.F.B.GREEN | | | 1 | | | |
| 52005 | 52005-0721 | GAUGE,FUEL | | 1 | 1 | | | |
| 56054 | 56054-1133 | MARK,IGNITION | | 1 | 1 | | | |
| 92022 | 92022-1521 | WASHER,NYLON,5.3X11.5X1.5 | | 2 | 2 | | | |
| 92022A | 92022-228 | WASHER,7X24X1.6 | | 3 | 3 | | | |
| 92037 | 92037-010 | CLAMP,TUBE | | 4 | 4 | | | |
| 92071 | 92071-1187 | GROMMET | | 2 | 2 | | | |
| 92075 | 92075-015 | DAMPER | | 2 | 2 | | | |
| 92093 | 92093-1030 | SEAL,FUEL TANK CAP | | 1 | 1 | | | |
| 92152 | 92152-1655 | COLLAR,6.5X10X17.6 | | 2 | 2 | | | |
| 92153 | 92153-1421 | BOLT,FLANGED,5X12 | | 4 | 4 | | | |
| 92153A | 92153-1616 | BOLT,SOCKET,5X16 | | 3 | 3 | | | |
| 92154 | 92154-0026 | BOLT,SOCKET,5X16 | | 2 | 2 | | | |
| 92154A | 92154-0215 | BOLT,SOCKET,5X10 | | 2 | 2 | | | |
| 92160 | 92160-1613 | DAMPER | | 4 | 4 | | | |
| 92161 | 92161-1468 | DAMPER,12X28X21 | | 1 | 1 | | | |
| 92161A | 92161-1482 | DAMPER,10X24X15 | | 2 | 2 | | | |

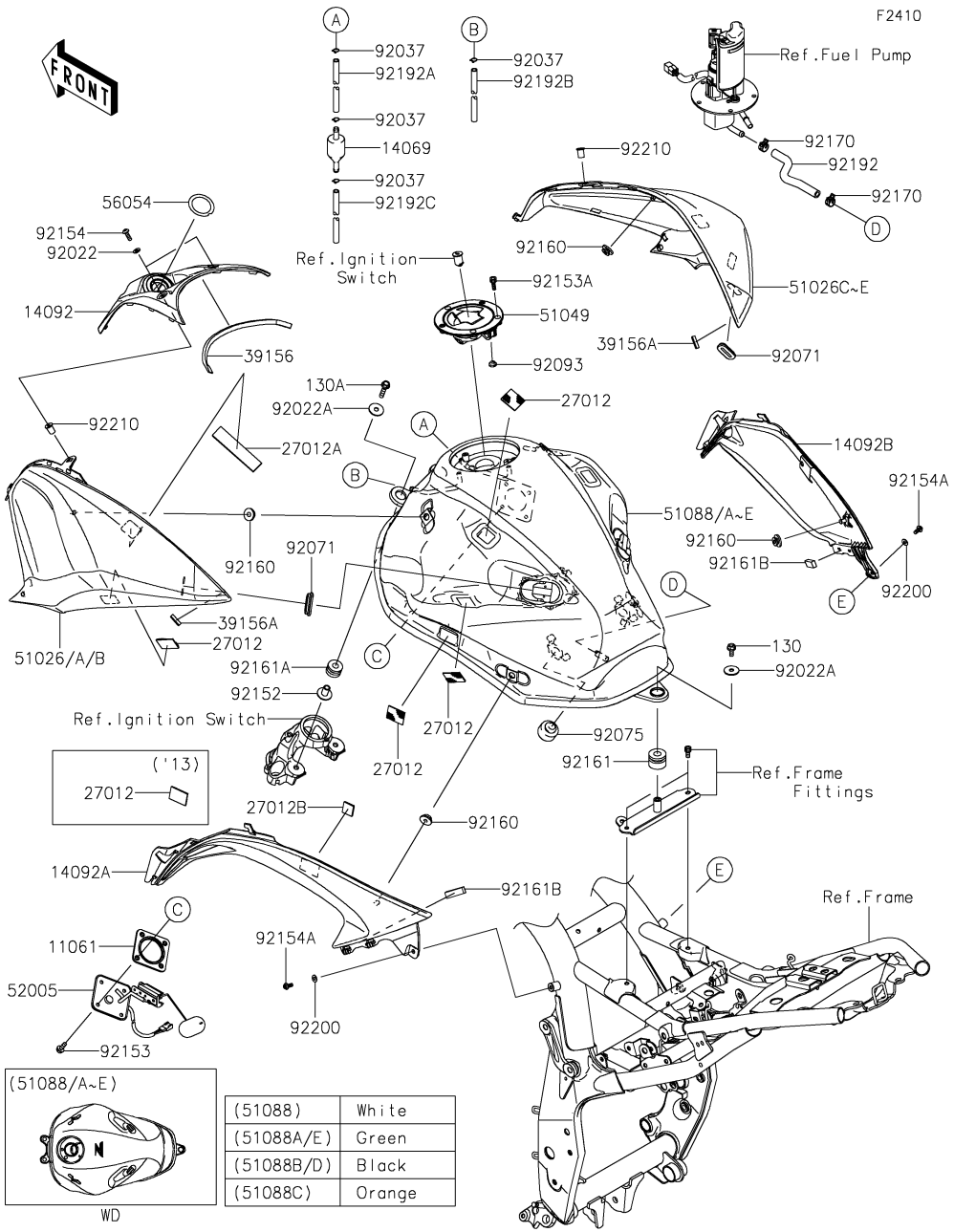


| (51088) | White |
|---|---|
| (51088A/E) | Green |
| (51088B/D) | Black |
| (51088C) | Orange |

| Ref. No. | Part No. | Description | Spec Code | Quantity-ZR800 '13 ADS | '14 AEF | '15 AFF | '16 AGF | |
|---|---|---|---|---|---|---|---|---|
| 92161B | 92161-1539 | DAMPER,10X35X6 | | 2 | 2 | | | |
| 92170 | 92170-1492 | CLAMP | | 2 | 2 | | | |
| 92192 | 92192-0593 | TUBE,FUEL | | 1 | 1 | | | |
| 92192A | 92192-0798 | TUBE,BREATHER | | 1 | 1 | | | |
| 92192B | 92192-1311 | TUBE,6X9X930 | | 1 | 1 | | | |
| 92192C | 92192-1312 | TUBE,6X9X1095 | | 1 | 1 | | | |
| 92200 | 92200-1480 | WASHER,NYLON,5.3X11.5X0.5 | | 2 | 2 | | | |
| 92210 | 92210-0498 | NUT,WELL,5MM | | 2 | 2 | | | |
| 130 | 130BA0614 | BOLT-FLANGED,6X14 | | 1 | 1 | | | |
| 130A | 130BA0630 | BOLT-FLANGED,6X30 | | 2 | 2 | | | |

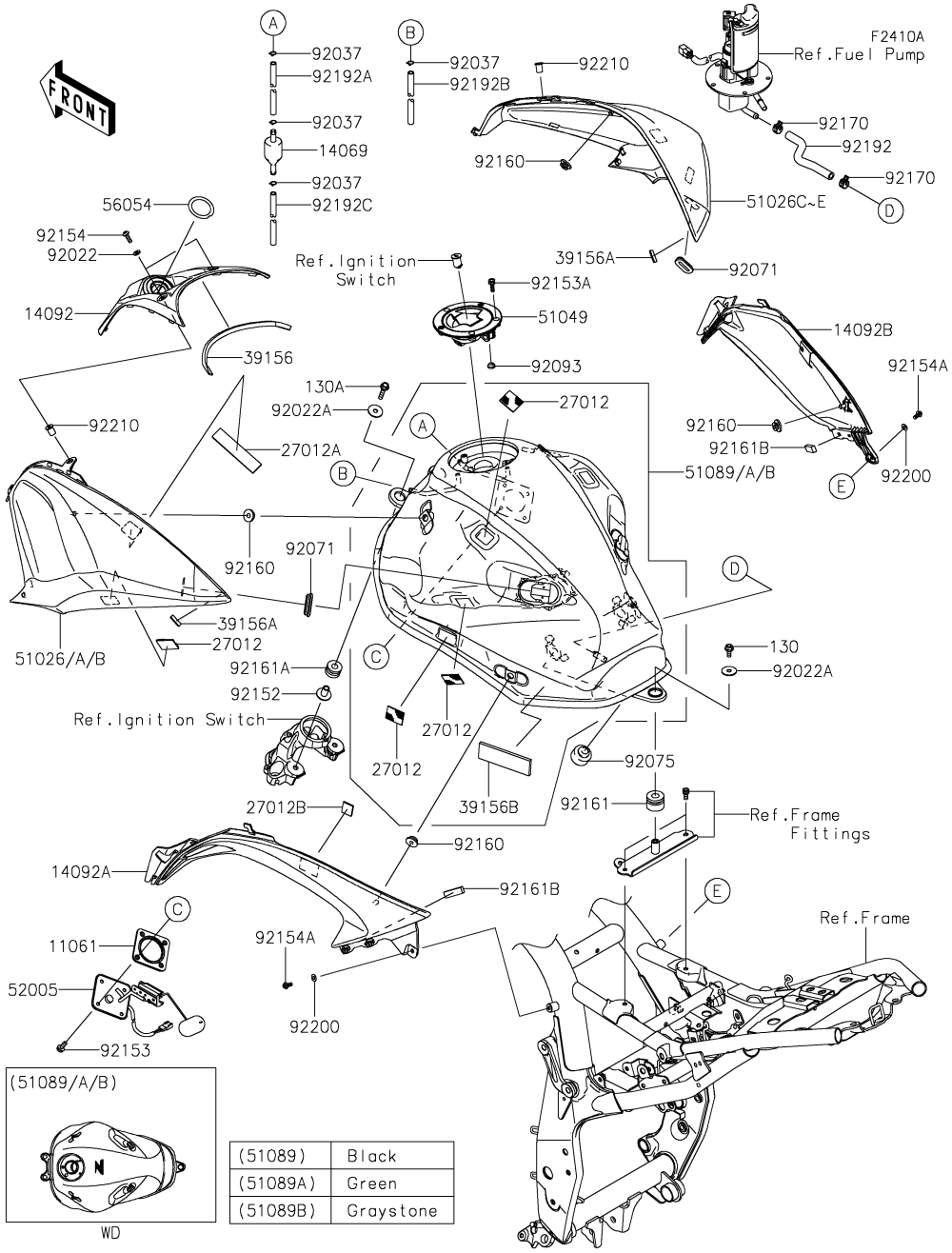


| (51089) | Black |
|---|---|
| (51089A) | Green |
| (51089B) | Graystone |

| Ref. No. | Part No. | Description | Spec Code | Quantity-ZR800 '13 ADS | '14 AEF | '15 AFF | '16 AGF | |
|---|---|---|---|---|---|---|---|---|
| 11061 | 11061-0797 | GASKET,FUEL GAUGE | | | | 1 | | |
| 14069 | 14069-0008 | BREATHER,TANK | | | | 1 | | |
| 14092 | 14092-1090 | COVER,IGNITION SWITCH | | | | 1 | | |
| 14092A | 14092-1091 | COVER,KNEE GRIP,LH | | | | 1 | | |
| 14092B | 14092-1092 | COVER,KNEE GRIP,RH | | | | 1 | | |
| 27012 | 27012-0170 | HOOK | | | | 8 | | |
| 27012A | 27012-0746 | HOOK,DUAL LOCK,20X90 | | | | 2 | | |
| 27012B | 27012-0772 | HOOK,20X20X3.0 | | | | 2 | | |
| 39156 | 39156-0995 | PAD,IGNITION SWITCH | | | | 1 | | |
| 39156A | 39156-0999 | PAD,5X20X3 | | | | 2 | | |
| 39156B | 39156-1858 | PAD,93X30X5 | | | | 2 | | |
| 51026 | 51026-0053-25Y | COVER TANK,LH,P.S.WHITE | | | | 1 | | |
| 51026A | 51026-0053-45L | COVER TANK,LH,F.EBONY | | | | 1 | | |
| 51026B | 51026-0053-660 | COVER TANK,LH,M.S.BLACK | | | | 1 | | |
| 51026C | 51026-0054-25Y | COVER TANK,RH,P.S.WHITE | | | | 1 | | |
| 51026D | 51026-0054-45L | COVER TANK,RH,F.EBONY | | | | 1 | | |
| 51026E | 51026-0054-660 | COVER TANK,RH,M.S.BLACK | | | | 1 | | |
| 51049 | 51049-0714 | CAP-TANK,FUEL | | | | 1 | | |
| 51089 | 51089-5179-660 | TANK-COMP-FUEL,M.S.BLACK | | | | 1 | | |
| 51089A | 51089-5180-35K | TANK-COMP-FUEL,C.F.B.GREEN | | | | 1 | | |
| 51089B | 51089-5187-35B | TANK-COMP-FUEL,M.F.R.GRAYSTONE | | | | 1 | | |
| 52005 | 52005-0721 | GAUGE,FUEL | | | | 1 | | |
| 56054 | 56054-1133 | MARK,IGNITION | | | | 1 | | |
| 92022 | 92022-1521 | WASHER,NYLON,5.3X11.5X1.5 | | | | 2 | | |
| 92022A | 92022-228 | WASHER,7X24X1.6 | | | | 3 | | |
| 92037 | 92037-010 | CLAMP,TUBE | | | | 4 | | |
| 92071 | 92071-1187 | GROMMET | | | | 2 | | |
| 92075 | 92075-015 | DAMPER | | | | 2 | | |
| 92093 | 92093-1030 | SEAL,FUEL TANK CAP | | | | 1 | | |
| 92152 | 92152-1655 | COLLAR,6.5X10X17.6 | | | | 2 | | |
| 92153 | 92153-1421 | BOLT,FLANGED,5X12 | | | | 4 | | |
| 92153A | 92153-1616 | BOLT,SOCKET,5X16 | | | | 3 | | |
| 92154 | 92154-0026 | BOLT,SOCKET,5X16 | | | | 2 | | |
| 92154A | 92154-0215 | BOLT,SOCKET,5X10 | | | | 2 | | |
| 92160 | 92160-1613 | DAMPER | | | | 4 | | |
| 92161 | 92161-1468 | DAMPER,12X28X21 | | | | 1 | | |
| 92161A | 92161-1482 | DAMPER,10X24X15 | | | | 2 | | |
| 92161B | 92161-1539 | DAMPER,10X35X6 | | | | 2 | | |
| 92170 | 92170-1492 | CLAMP | | | | 2 | | |
| 92192 | 92192-0593 | TUBE,FUEL | | | | 1 | | |

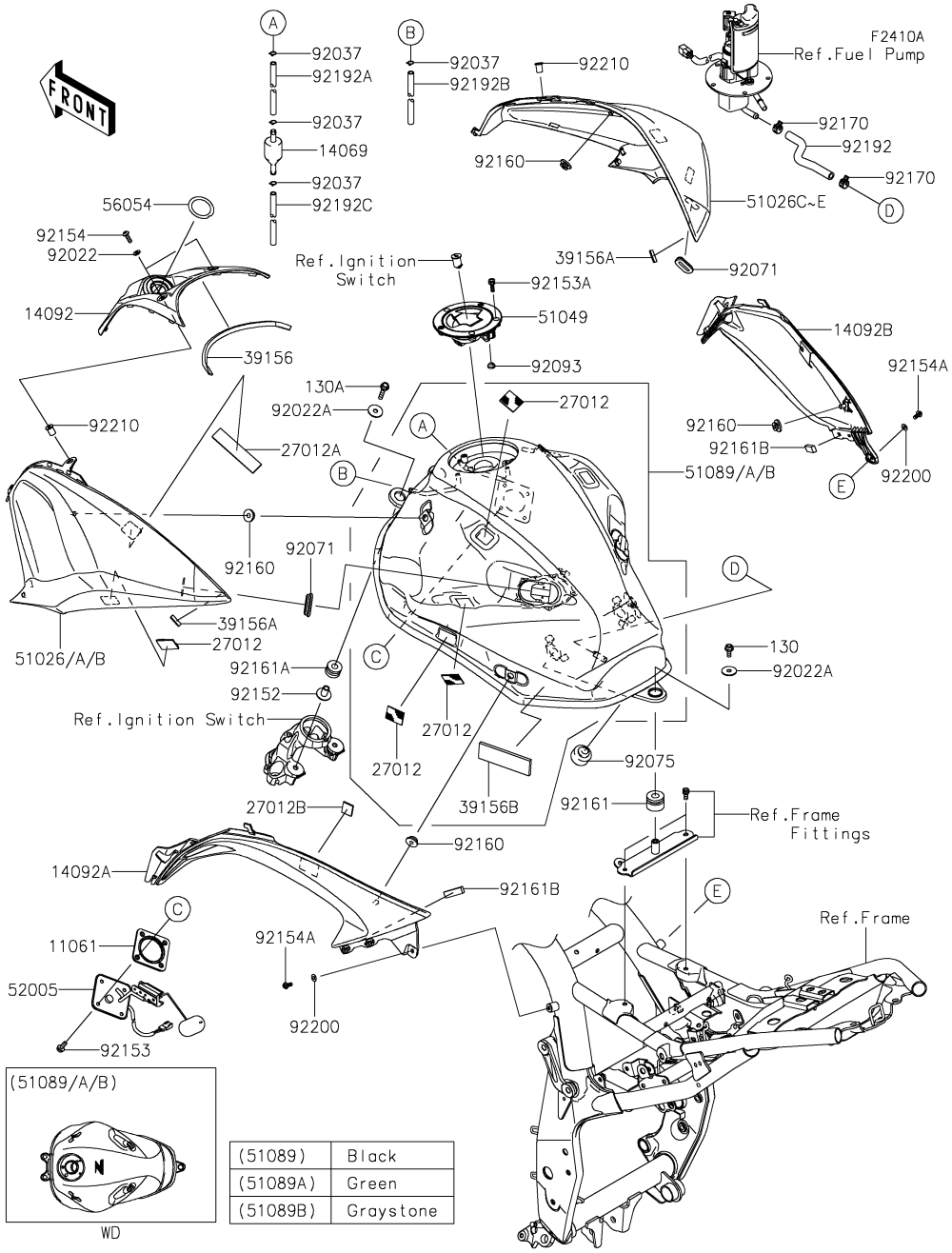


| | | |
|---|---|---|
| (51089) | Black | |
| (51089A) | Green | |
| (51089B) | Graystone | |

| Ref. No. | Part No. | Description | Spec Code | Quantity-ZR800 '13 ADS | '14 AEF | '15 AFF | '16 AGF | |
|---|---|---|---|---|---|---|---|---|
| 92192A | 92192-0798 | TUBE,BREATHER | | | | 1 | | |
| 92192B | 92192-1311 | TUBE,6X9X930 | | | | 1 | | |
| 92192C | 92192-1312 | TUBE,6X9X1095 | | | | 1 | | |
| 92200 | 92200-1480 | WASHER,NYLON,5.3X11.5X0.5 | | | | 2 | | |
| 92210 | 92210-0498 | NUT,WELL,5MM | | | | 2 | | |
| 130 | 130BA0614 | BOLT-FLANGED,6X14 | | | | 1 | | |
| 130A | 130BA0630 | BOLT-FLANGED,6X30 | | | | 2 | | |

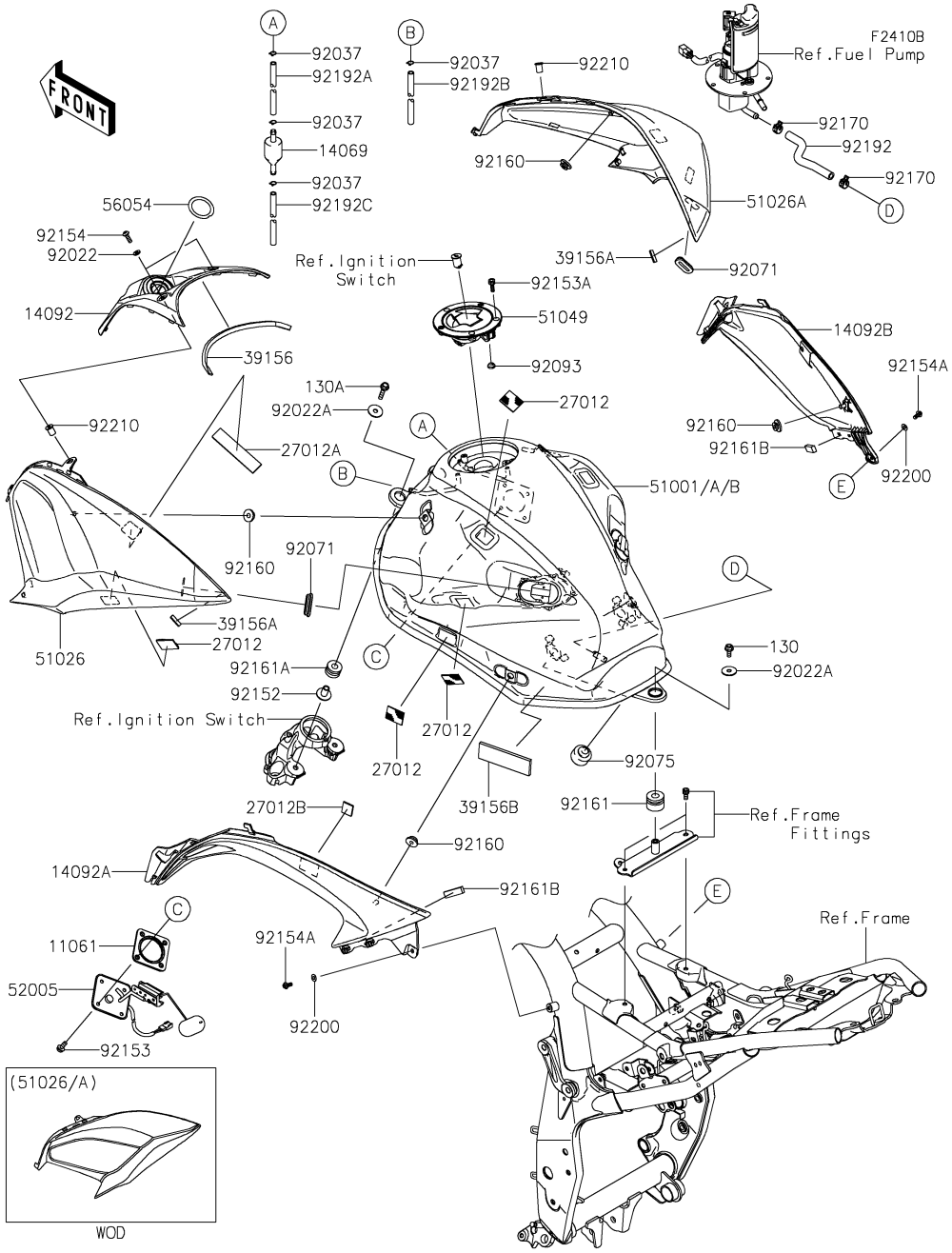


| Ref. No. | Part No. | Description | Spec Code | Quantity-ZR800 '13 ADS | '14 AEF | '15 AFF | '16 AGF | |
|---|---|---|---|---|---|---|---|---|
| 11061 | 11061-0797 | GASKET,FUEL GAUGE | | | | | 1 | |
| 14069 | 14069-0008 | BREATHER,TANK | | | | | 1 | |
| 14092 | 14092-1090 | COVER,IGNITION SWITCH | | | | | 1 | |
| 14092A | 14092-1091 | COVER,KNEE GRIP,LH | | | | | 1 | |
| 14092B | 14092-1092 | COVER,KNEE GRIP,RH | | | | | 1 | |
| 27012 | 27012-0170 | HOOK | | | | | 8 | |
| 27012A | 27012-0746 | HOOK,DUAL LOCK,20X90 | | | | | 2 | |
| 27012B | 27012-0772 | HOOK,20X20X3.0 | | | | | 2 | |
| 39156 | 39156-0995 | PAD,IGNITION SWITCH | | | | | 1 | |
| 39156A | 39156-0999 | PAD,5X20X3 | | | | | 2 | |
| 39156B | 39156-1858 | PAD,93X30X5 | | | | | 2 | |
| 51001 | 51001-0782-25Y | TANK-COMP-FUEL,P.S.WHITE | | | | | 1 | |
| 51001A | 51001-0782-45L | TANK-COMP-FUEL,F.EBONY | | | | | 1 | |
| 51001B | 51001-0782-53R | TANK-COMP-FUEL,C.C.RED | | | | | 1 | |
| 51026 | 51026-0053-660 | COVER TANK,LH,M.S.BLACK | | | | | 1 | |
| 51026A | 51026-0054-660 | COVER TANK,RH,M.S.BLACK | | | | | 1 | |
| 51049 | 51049-0714 | CAP-TANK,FUEL | | | | | 1 | |
| 52005 | 52005-0721 | GAUGE,FUEL | | | | | 1 | |
| 56054 | 56054-1133 | MARK,IGNITION | | | | | 1 | |
| 92022 | 92022-1521 | WASHER,NYLON,5.3X11.5X1.5 | | | | | 2 | |
| 92022A | 92022-228 | WASHER,7X24X1.6 | | | | | 3 | |
| 92037 | 92037-010 | CLAMP,TUBE | | | | | 4 | |
| 92071 | 92071-1187 | GROMMET | | | | | 2 | |
| 92075 | 92075-015 | DAMPER | | | | | 2 | |
| 92093 | 92093-1030 | SEAL,FUEL TANK CAP | | | | | 1 | |
| 92152 | 92152-1655 | COLLAR,6.5X10X17.6 | | | | | 2 | |
| 92153 | 92153-1421 | BOLT,FLANGED,5X12 | | | | | 4 | |
| 92153A | 92153-1616 | BOLT,SOCKET,5X16 | | | | | 3 | |
| 92154 | 92154-0026 | BOLT,SOCKET,5X16 | | | | | 2 | |
| 92154A | 92154-0215 | BOLT,SOCKET,5X10 | | | | | 2 | |
| 92160 | 92160-1613 | DAMPER | | | | | 4 | |
| 92161 | 92161-1468 | DAMPER,12X28X21 | | | | | 1 | |
| 92161A | 92161-1482 | DAMPER,10X24X15 | | | | | 2 | |
| 92161B | 92161-1539 | DAMPER,10X35X6 | | | | | 2 | |
| 92170 | 92170-1492 | CLAMP | | | | | 2 | |
| 92192 | 92192-0593 | TUBE,FUEL | | | | | 1 | |
| 92192A | 92192-0798 | TUBE,BREATHER | | | | | 1 | |
| 92192B | 92192-1311 | TUBE,6X9X930 | | | | | 1 | |
| 92192C | 92192-1312 | TUBE,6X9X1095 | | | | | 1 | |
| 92200 | 92200-1480 | WASHER,NYLON,5.3X11.5X0.5 | | | | | 2 | |

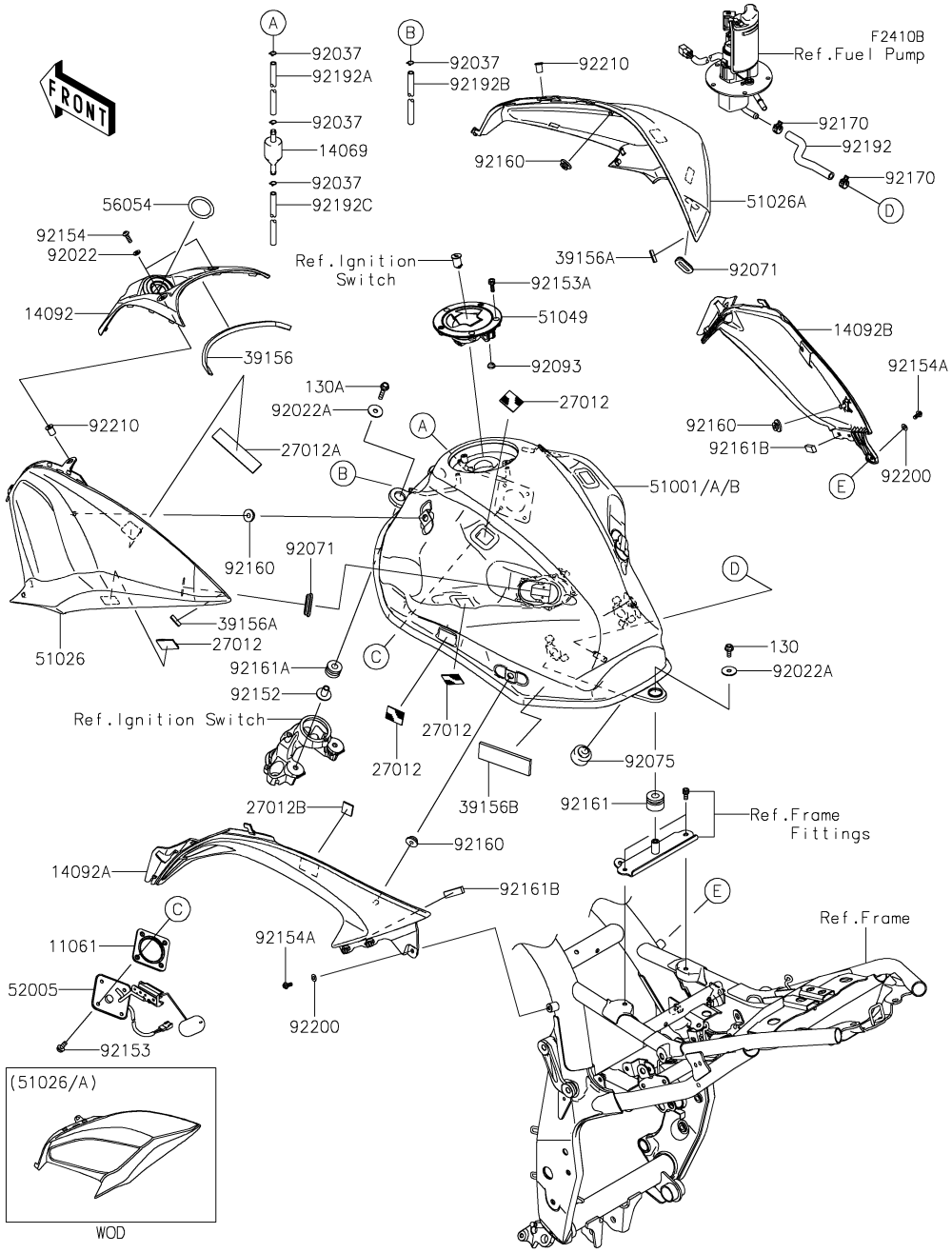


| Ref. No. | Part No. | Description | Spec Code | Quantity-ZR800 '13 ADS | '14 AEF | '15 AFF | '16 AGF | |
|---|---|---|---|---|---|---|---|---|
| 92210 | 92210-0498 | NUT,WELL,5MM | | | | | 2 | |
| 130 | 130BA0614 | BOLT-FLANGED,6X14 | | | | | 1 | |
| 130A | 130BA0630 | BOLT-FLANGED,6X30 | | | | | 2 | |

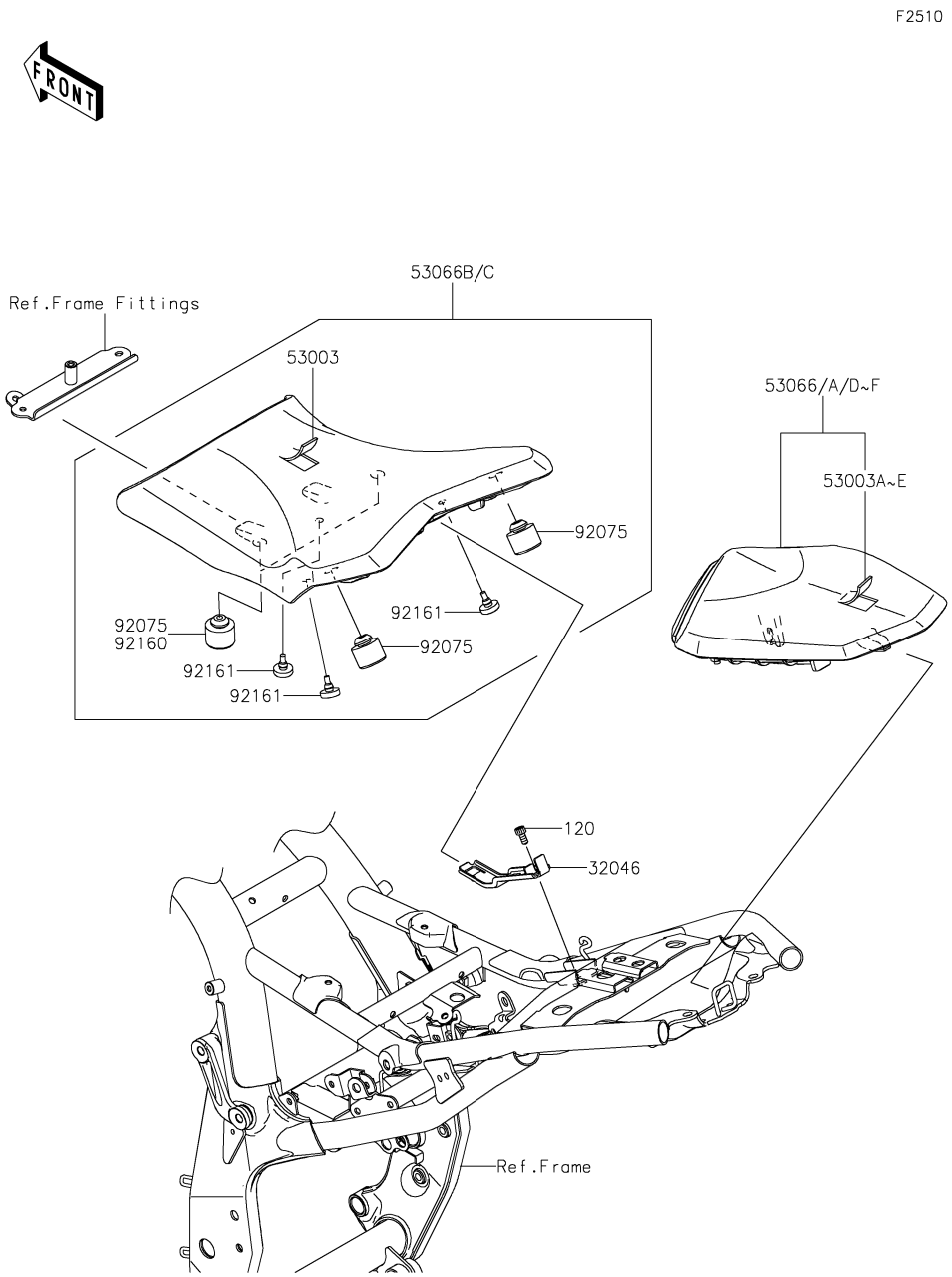


| Ref. No. | Part No. | Description | Spec Code | Quantity-ZR800 '13 ADS | '14 AEF | '15 AFF | '16 AGF | |
|---|---|---|---|---|---|---|---|---|
| 32046 | 32046-0335 | BRACKET-SEAT | | 1 | 1 | 1 | 1 | |
| 53003 | 53003-0332-MA | LEATHER,FR SEAT,BLACK | | 1 | 1 | 1 | 1 | |
| 53003A | 53003-0333-41C | LEATHER,RR SEAT,M.F.B.GREEN | | 1 | 1 | | | |
| 53003B | 53003-0333-MA | LEATHER,RR SEAT,BLACK | | 1 | 1 | | | |
| 53003C | 53003-0423-41C | LEATHER,RR SEAT,M.F.B.GREEN | | | | | 1 | |
| 53003D | 53003-0423-55F | LEATHER,RR SEAT,C.C.RED | | | | | 1 | |
| 53003E | 53003-0423-MA | LEATHER,RR SEAT,BLACK | | | | 1 | 1 | |
| 53066 | 53066-0360-12Y | SEAT,RR,LEATHER BLK+BAND BLK | | 1 | 1 | | | |
| 53066A | 53066-0360-41D | SEAT,RR,LEATHER GRN+BAND GRN | | 1 | 1 | | | |
| 53066B | 53066-0404-MA | SEAT-ASSY,FR,BLACK | | 1 | 1 | | | |
| 53066C | 53066-0466-MA | SEAT-ASSY,FR,BLACK | | | | 1 | 1 | |
| 53066D | 53066-0467-12Y | SEAT,RR,LEATHER BLK+BAND BLK | | | | 1 | 1 | |
| 53066E | 53066-0467-41D | SEAT,RR,LEATHER GRN+BAND GRN | | | | | 1 | |
| 53066F | 53066-0467-55K | SEAT-ASSY,RR,C.C.RED | | | | | 1 | |
| 92075 | 92075-1002 | DAMPER | | 4 | 4 | 2 | 2 | |
| 92160 | 92160-1513 | DAMPER | | | | 2 | 2 | |
| 92161 | 92161-0183 | DAMPER | | 3 | 3 | 3 | 3 | |
| 120 | 120CA0612 | BOLT-SOCKET,6X12 | | 1 | 1 | 1 | 1 | |

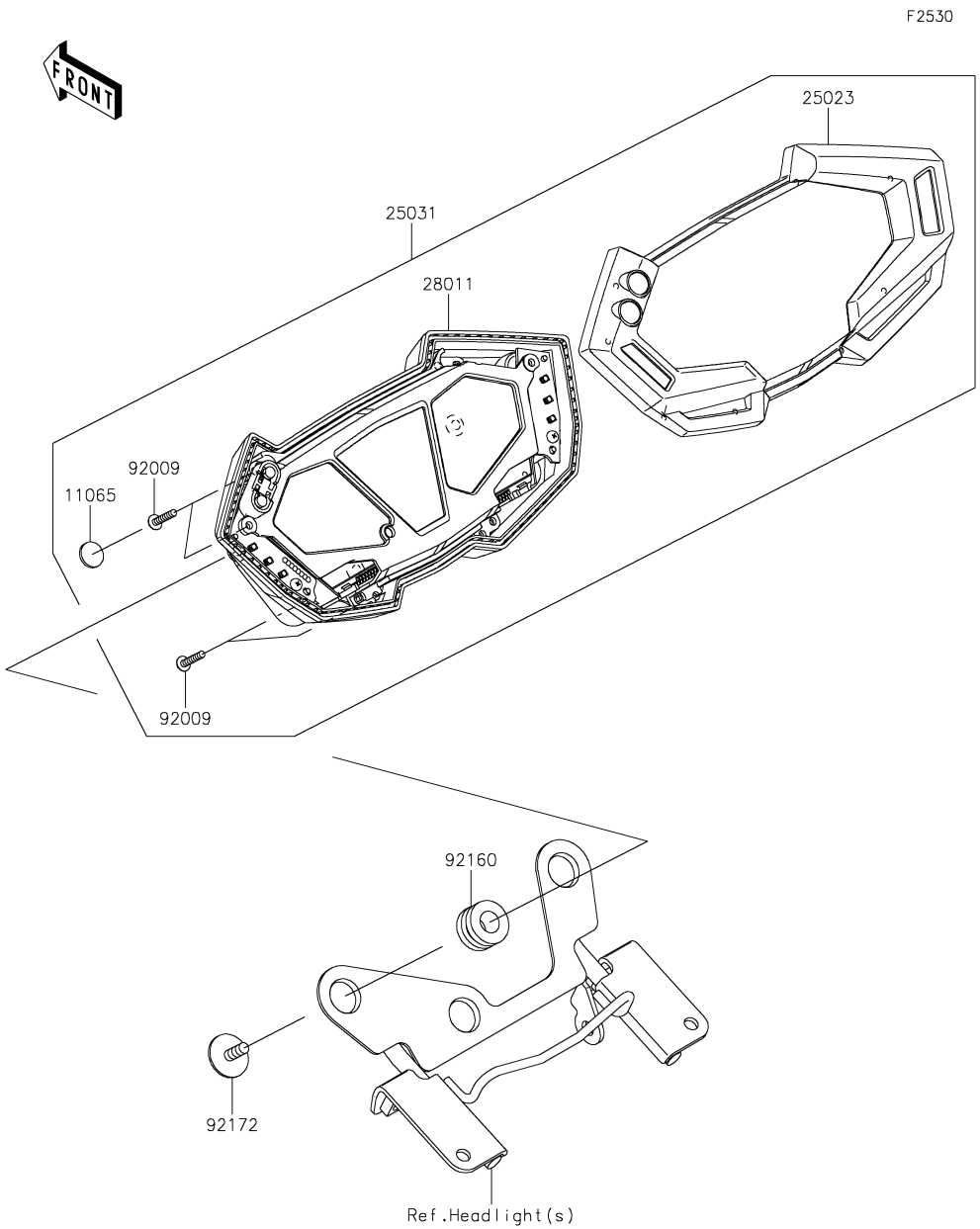


| Ref. No. | Part No. | Description | Spec Code | Quantity-ZR800 '13 ADS | '14 AEF | '15 AFF | '16 AGF | |
|---|---|---|---|---|---|---|---|---|
| 11065 | 11065-0774 | CAP,WATER PROOF | | 4 | 4 | 4 | 4 | |
| 25023 | 25023-0085 | COVER-METER CASE | | 1 | 1 | 1 | 1 | |
| 25031 | 25031-0428 | METER-ASSY,COMBINATION | | 1 | 1 | 1 | 1 | |
| 28011 | 28011-0578 | METER,LCD | | 1 | 1 | 1 | 1 | |
| 92009 | 92009-1391 | SCREW,TAPPING,3X16 | | 8 | 8 | 8 | 8 | |
| 92160 | 92160-1167 | DAMPER,10X20X12 | | 3 | 3 | 3 | 3 | |
| 92172 | 92172-0441 | SCREW,TAPPING,WP,5X14 | | 3 | 3 | 3 | 3 | |

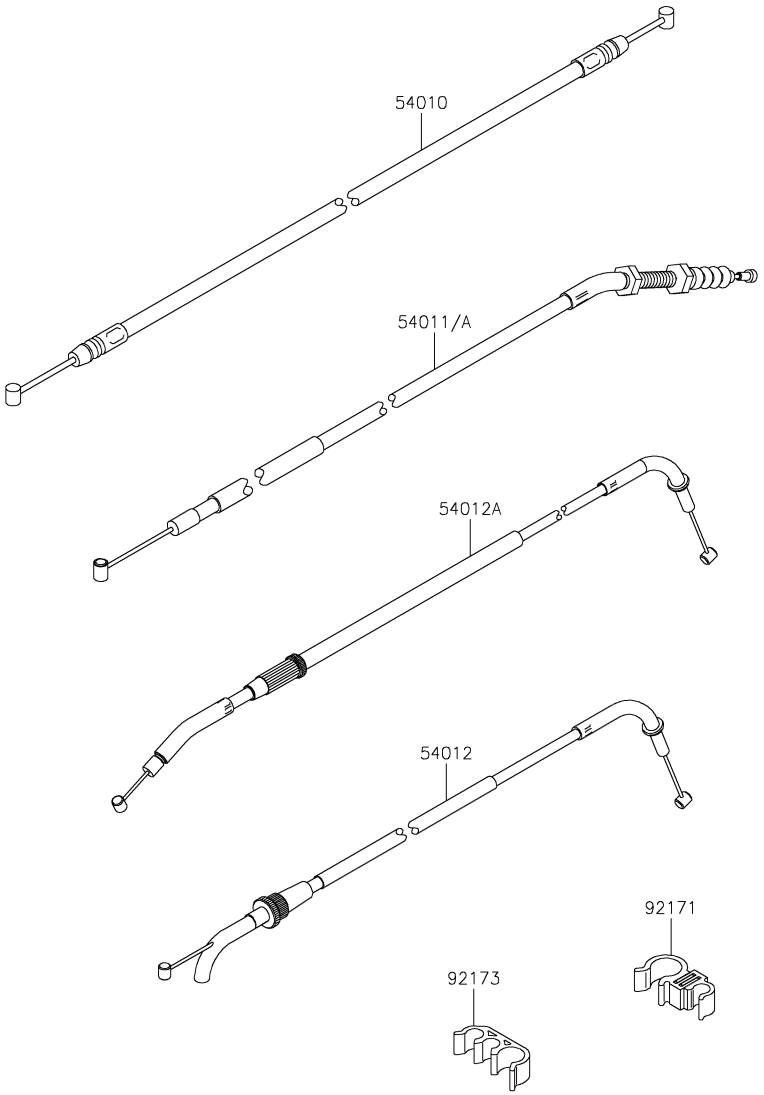


| Ref. No. | Part No. | Description | Spec Code | Quantity-ZR800 '13 ADS | '14 AEF | '15 AFF | '16 AGF | |
|---|---|---|---|---|---|---|---|---|
| 54010 | 54010-0588 | CABLE,SEAT LOCK | | 1 | 1 | 1 | 1 | |
| 54011 | 54011-0563 | CABLE-CLUTCH | | 1 | 1 | | | |
| 54011A | 54011-0599 | CABLE-CLUTCH | | | | 1 | 1 | |
| 54012 | 54012-0582 | CABLE-THROTTLE,OPENING | | 1 | 1 | 1 | 1 | |
| 54012A | 54012-0583 | CABLE-THROTTLE,CLOSING | | 1 | 1 | 1 | 1 | |
| 92171 | 92171-1666 | CLAMP | | 1 | 1 | 1 | 1 | |
| 92173 | 92173-1042 | CLAMP,CABLE&HOSE | | 1 | 1 | 1 | 1 | |

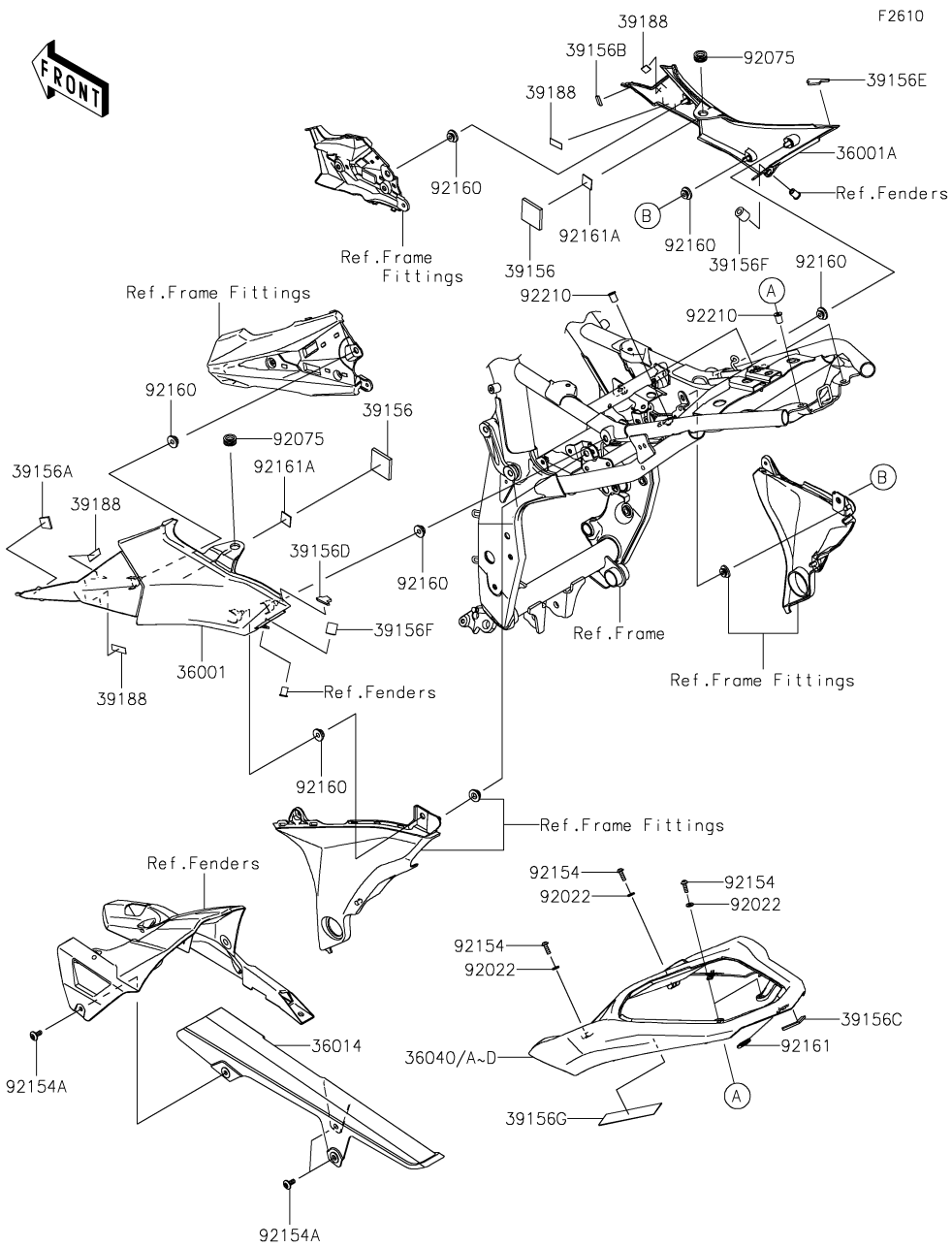


| Ref. No. | Part No. | Description | Spec Code | Quantity-ZR800 '13 ADS | '14 AEF | '15 AFF | '16 AGF | |
|---|---|---|---|---|---|---|---|---|
| 36001 | 36001-0596 | COVER-SIDE,LH | | 1 | 1 | 1 | 1 | |
| 36001A | 36001-0597 | COVER-SIDE,RH | | 1 | 1 | 1 | 1 | |
| 36014 | 36014-0025 | CASE-CHAIN | | 1 | 1 | 1 | 1 | |
| 36040 | 36040-0139-15T | COVER-TAIL,C.B.ORANGE | | | 1 | | | |
| 36040A | 36040-0139-25Y | COVER-TAIL,P.S.WHITE | | 1 | | 1 | | |
| 36040B | 36040-0139-35K | COVER-TAIL,C.F.B.GREEN | | | | 1 | | |
| 36040C | 36040-0139-45L | COVER-TAIL,F.EBONY | | | | 1 | | |
| 36040D | 36040-0139-660 | COVER-TAIL,M.S.BLACK | | 1 | 1 | | 1 | |
| 39156 | 39156-0292 | PAD | | 2 | 2 | 2 | 2 | |
| 39156A | 39156-0970 | PAD,SIDE COVER,LH,R END | | 1 | 1 | 1 | 1 | |
| 39156B | 39156-0971 | PAD,SIDE COVER,RH,R END | | 1 | 1 | 1 | 1 | |
| 39156C | 39156-0972 | PAD,TAIL COVER,END | | 1 | 1 | 1 | 1 | |
| 39156D | 39156-1723 | PAD,SIDE COVER,LH,EDGE | | 1 | 1 | 1 | 1 | |
| 39156E | 39156-1724 | PAD,SIDE COVER,RH,EDGE | | 1 | 1 | 1 | 1 | |
| 39156F | 39156-1725 | PAD,8X16X17 | | 2 | 2 | 2 | 2 | |
| 39156G | 39156-1764 | PAD,35X110 | | 2 | 2 | 2 | 2 | |
| 39188 | 39188-0559 | TAPE,10X30X0.5 | | 4 | 4 | 4 | 4 | |
| 92022 | 92022-1521 | WASHER,NYLON,5.3X11.5X1.5 | | 4 | 4 | 4 | 4 | |
| 92075 | 92075-1634 | DAMPER | | 2 | 2 | 2 | 2 | |
| 92154 | 92154-0026 | BOLT,SOCKET,5X16 | | 4 | 4 | 4 | 4 | |
| 92154A | 92154-0745 | BOLT,SOCKET,6X14 | | 3 | 3 | 3 | 3 | |
| 92160 | 92160-1613 | DAMPER | | 6 | 6 | 6 | 6 | |
| 92161 | 92161-1367 | DAMPER,12X23 | | 1 | 1 | 1 | 1 | |
| 92161A | 92161-1431 | DAMPER,20X20,T1.0 | | 2 | 2 | 2 | 2 | |
| 92210 | 92210-0498 | NUT,WELL,5MM | | 4 | 4 | 4 | 4 | |

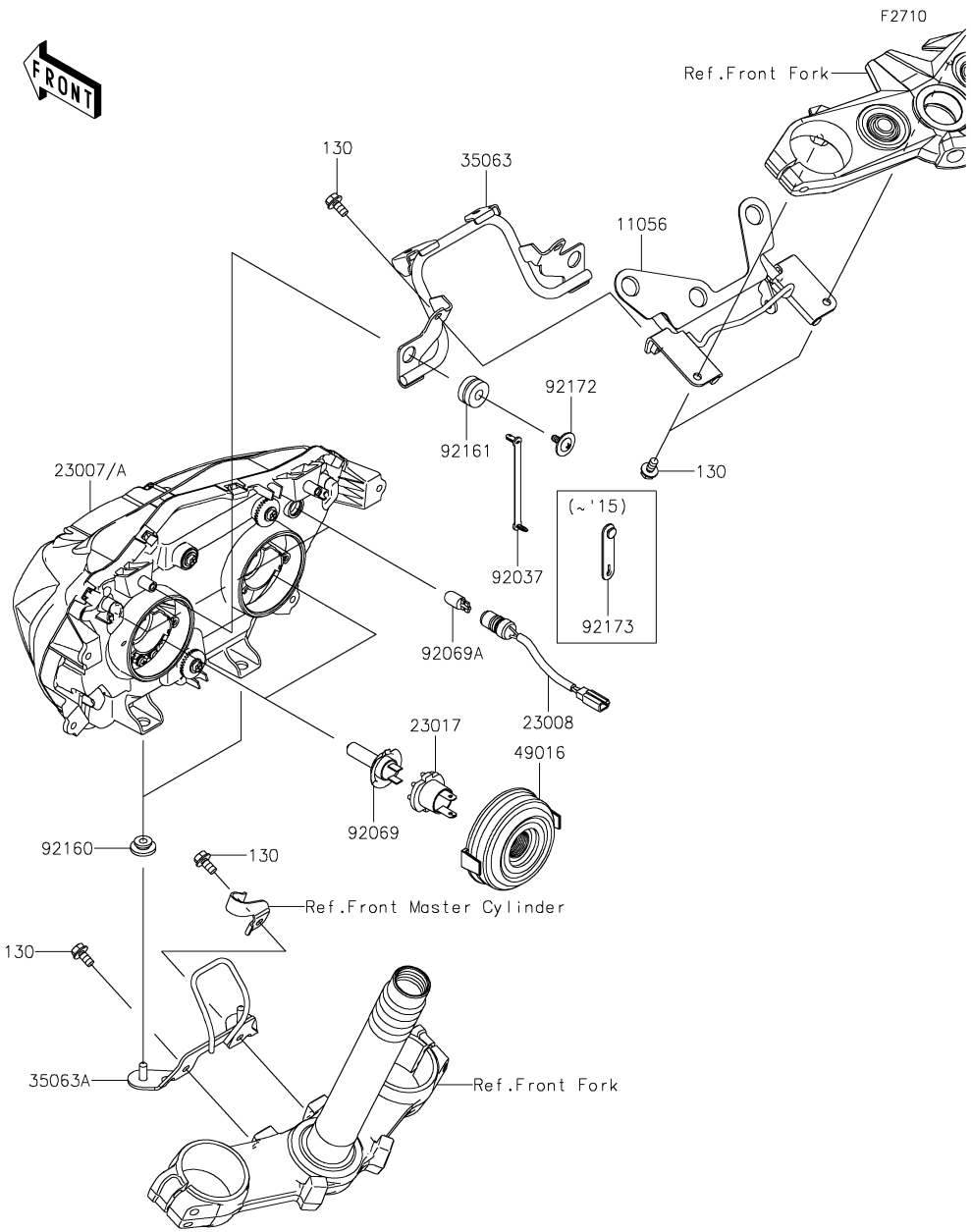


| Ref. No. | Part No. | Description | Spec Code | Quantity-ZR800 '13 ADS | '14 AEF | '15 AFF | '16 AGF | |
|---|---|---|---|---|---|---|---|---|
| 11056 | 11056-1801 | BRACKET,METER | | 1 | 1 | 1 | 1 | |
| 23007 | 23007-0180 | LENS-COMP | | 1 | 1 | 1 | | |
| 23007A | 23007-0193 | LENS-COMP | | | | | 1 | |
| 23008 | 23008-0152 | SOCKET-ASSY,POSITION LAMP | | 2 | 2 | 2 | 2 | |
| 23017 | 23017-0004 | SOCKET,HEAD LAMP | | 2 | 2 | 2 | 2 | |
| 35063 | 35063-0865 | STAY,HEAD LAMP,UPP | | 1 | 1 | 1 | 1 | |
| 35063A | 35063-0866 | STAY,HEAD LAMP,LWR | | 1 | 1 | 1 | 1 | |
| 49016 | 49016-0591 | COVER-SEAL | | 2 | 2 | 2 | 2 | |
| 92037 | 92037-1903 | CLAMP,SPEED,L=80.5 | | | | | 2 | |
| 92069 | 92069-0053 | BULB,12V 55W,H7 | | 2 | 2 | 2 | 2 | |
| 92069A | 92069-1016 | BULB,12V 5W | | 2 | 2 | 2 | 2 | |
| 92160 | 92160-1613 | DAMPER | | 2 | 2 | 2 | 2 | |
| 92161 | 92161-0054 | DAMPER | | 2 | 2 | 2 | 2 | |
| 92172 | 92172-0477 | SCREW,TAPPING+PW,5X14 | | 2 | 2 | 2 | 2 | |
| 92173 | 92173-1229 | CLAMP,RUBBER PLATE | | 2 | 2 | 2 | | |
| 130 | 130BB0612 | BOLT-FLANGED,6X12 | | 6 | 6 | 6 | 6 | |

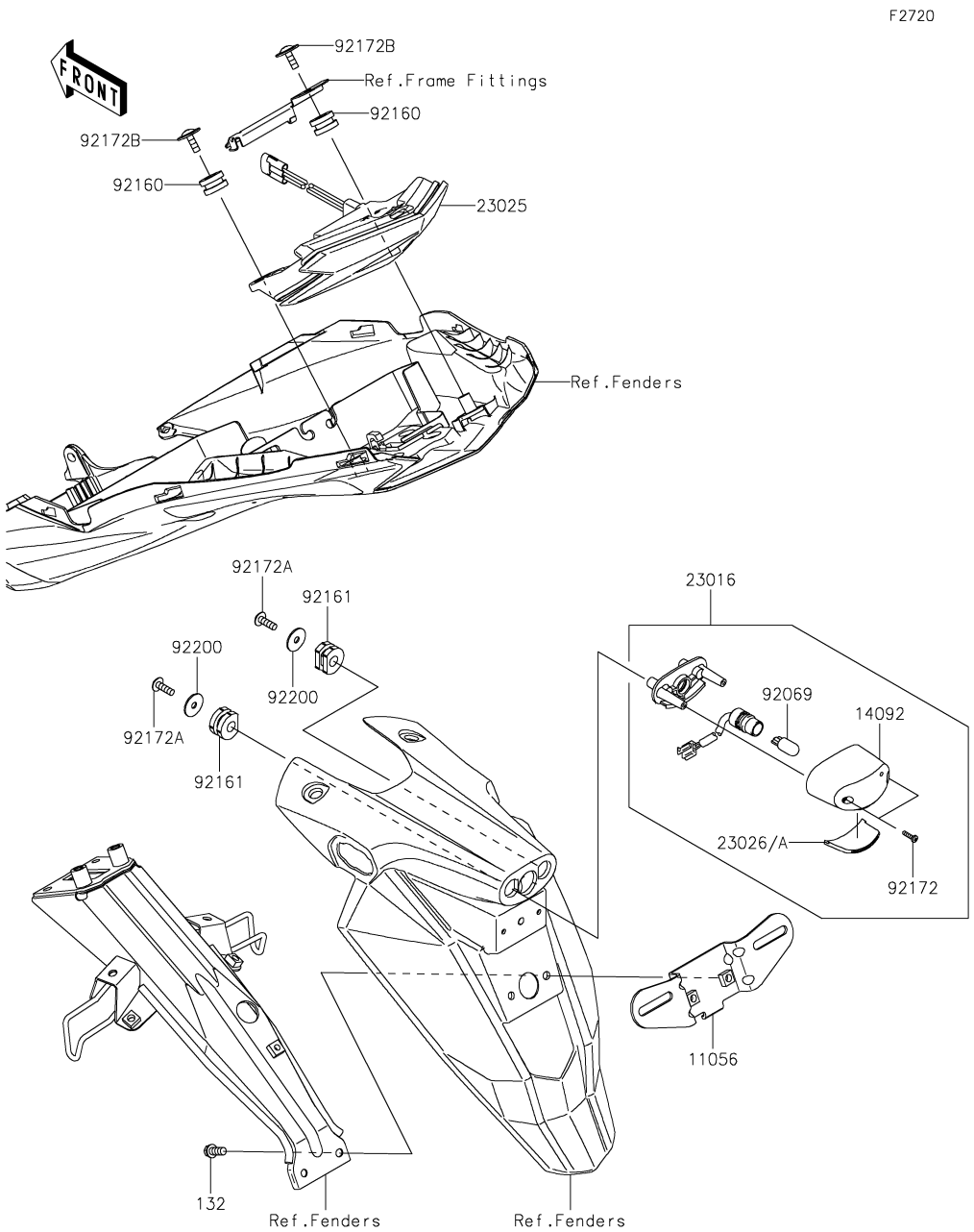


| Ref. No. | Part No. | Description | Spec Code | Quantity-ZR800 '13 ADS | '14 AEF | '15 AFF | '16 AGF | |
|---|---|---|---|---|---|---|---|---|
| 11056 | 11056-1540 | BRACKET,LICENSE | | 1 | 1 | 1 | 1 | |
| 14092 | 14092-0001 | COVER,LICENSE LAMP | | 1 | 1 | 1 | 1 | |
| 23016 | 23016-0561 | LAMP-ASSY,LICENSE | | 1 | 1 | 1 | 1 | |
| 23025 | 23025-0344 | LAMP-TAIL,LED | | 1 | 1 | 1 | 1 | |
| 23026 | 23026-0015 | LENS,LICENCE LAMP | | 1 | 1 | 1 | | |
| 23026A | 23026-0023 | LENS,LICENCE LAMP | | | | | 1 | |
| 92069 | 92069-1016 | BULB,12V 5W | | 1 | 1 | 1 | 1 | |
| 92160 | 92160-1167 | DAMPER,10X20X12 | | 2 | 2 | 2 | 2 | |
| 92161 | 92161-0776 | DAMPER | | 2 | 2 | 2 | 2 | |
| 92172 | 92172-0343 | SCREW,TAPPING,2.9X13 | | 2 | 2 | 2 | 2 | |
| 92172A | 92172-0427 | SCREW,TAPPING,5X16 | | 2 | 2 | 2 | 2 | |
| 92172B | 92172-0481 | SCREW,TAPTITE,5X16 | | 2 | 2 | 2 | 2 | |
| 92200 | 92200-0284 | WASHER,5.5X20X1.2 | | 2 | 2 | 2 | 2 | |
| 132 | 132BA0614 | BOLT-FLANGED-SMALL,6X14 | | 2 | 2 | 2 | 2 | |

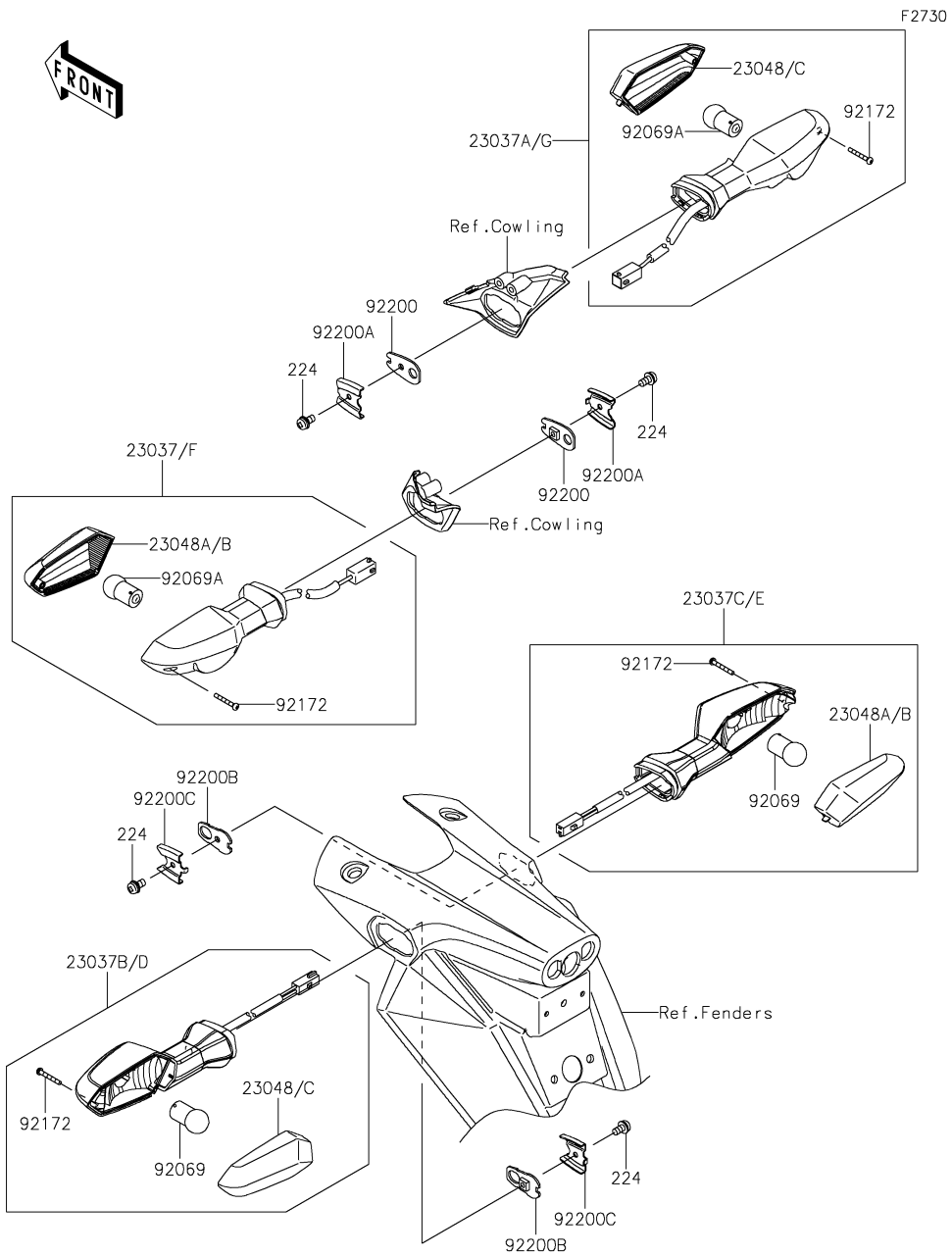


| Ref. No. | Part No. | Description | Spec Code | Quantity-ZR800 '13 ADS | '14 AEF | '15 AFF | '16 AGF | |
|---|---|---|---|---|---|---|---|---|
| 23037 | 23037-0204 | LAMP-ASSY-SIGNAL,FR,LH | | 1 | 1 | | | |
| 23037A | 23037-0205 | LAMP-ASSY-SIGNAL,FR,RH | | 1 | 1 | | | |
| 23037B | 23037-0247 | LAMP-ASSY-SIGNAL,RR,LH | | 1 | 1 | | | |
| 23037C | 23037-0248 | LAMP-ASSY-SIGNAL,RR,RH | | 1 | 1 | | | |
| 23037D | 23037-0304 | LAMP-ASSY-SIGNAL,RR,LH | | | | 1 | 1 | |
| 23037E | 23037-0305 | LAMP-ASSY-SIGNAL,RR,RH | | | | 1 | 1 | |
| 23037F | 23037-0310 | LAMP-ASSY-SIGNAL,FR,LH | | | | 1 | 1 | |
| 23037G | 23037-0311 | LAMP-ASSY-SIGNAL,FR,RH | | | | 1 | 1 | |
| 23048 | 23048-0014 | LENS-SIGNAL LAMP,FR,RH & RR,LH | | 2 | 2 | | | |
| 23048A | 23048-0015 | LENS-SIGNAL LAMP,FR,LH & RR,RH | | 2 | 2 | | | |
| 23048B | 23048-0025 | LENS-SIGNAL LAMP,FR,LH & RR,RH | | | | 2 | 2 | |
| 23048C | 23048-0026 | LENS-SIGNAL LAMP,FR,RH & RR,LH | | | | 2 | 2 | |
| 92069 | 92069-0024 | BULB,12V 10W | | 2 | 2 | 2 | 2 | |
| 92069A | 92069-0058 | BULB,12V 10W | | 2 | 2 | 2 | 2 | |
| 92172 | 92172-0395 | SCREW,2.9X22 | | 4 | 4 | 4 | 4 | |
| 92200 | 92200-0164 | WASHER,SIGNAL LAMP | | 2 | 2 | 2 | 2 | |
| 92200A | 92200-0165 | WASHER,SIGNAL LAMP | | 2 | 2 | 2 | 2 | |
| 92200B | 92200-0854 | WASHER,NUT 4MM | | 2 | 2 | 2 | 2 | |
| 92200C | 92200-0855 | WASHER | | 2 | 2 | 2 | 2 | |
| 224 | 224AB0408 | SCREW-PAN-WP-CROS,4X8 | | 4 | 4 | 4 | 4 | |

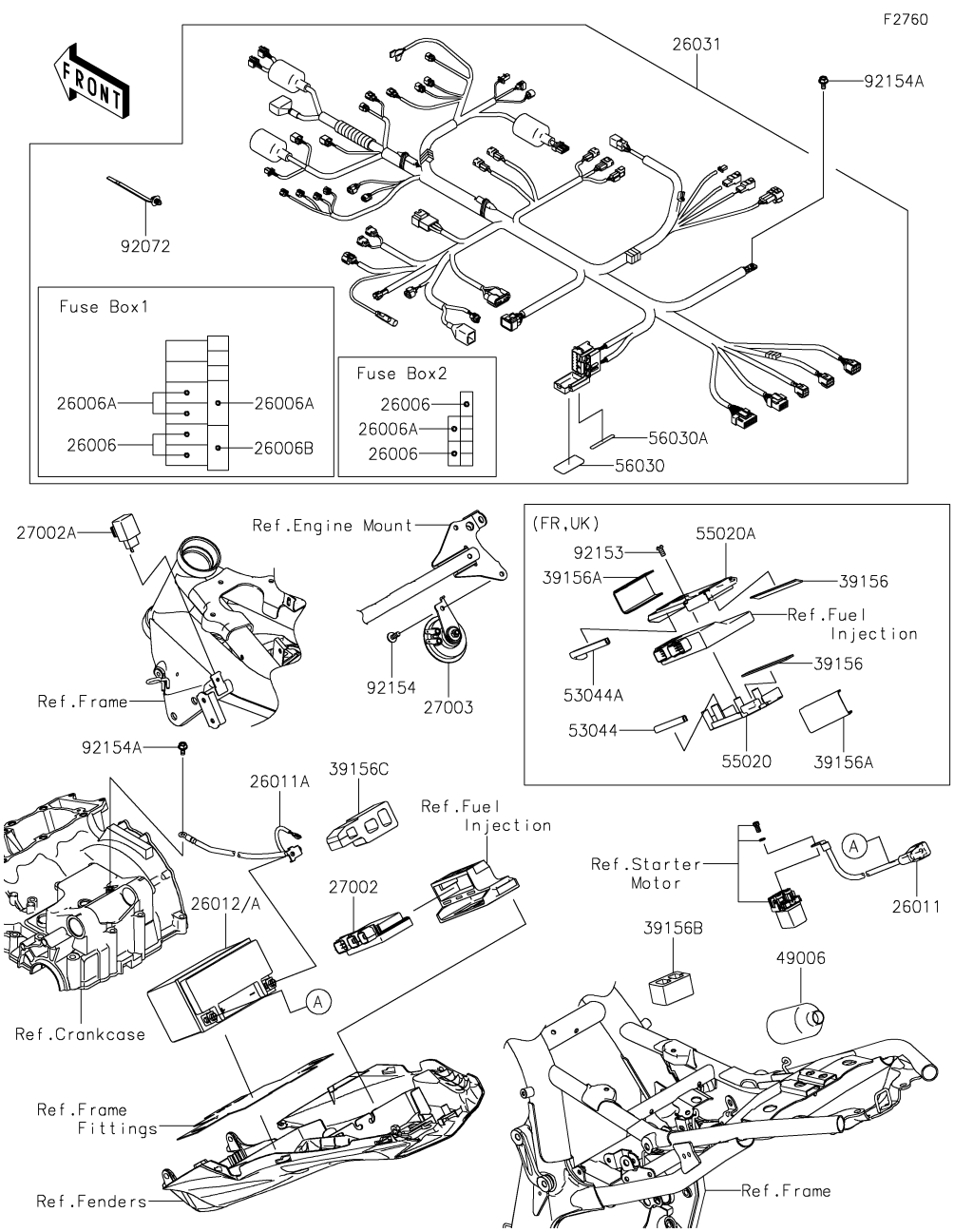


| Ref. No. | Part No. | Description | Spec Code | Quantity-ZR800 '13 ADS | '14 AEF | '15 AFF | '16 AGF | |
|---|---|---|---|---|---|---|---|---|
| 26006 | 26006-0001 | FUSE,MINI BLADE,15A,BLUE | | 4 | 4 | 4 | 4 | |
| 26006A | 26006-0055 | FUSE,MINI BLADE,7.5A,BROWN | | 4 | 4 | 4 | 4 | |
| 26006B | 26006-1080 | FUSE,MINI BLADE,30A,GREEN | | 1 | 1 | 1 | 1 | |
| 26011 | 26011-0764 | WIRE-LEAD,BATTERY(+) | | 1 | 1 | 1 | 1 | |
| 26011A | 26011-0810 | WIRE-LEAD,BATTERY(-) | | 1 | 1 | 1 | 1 | |
| 26012 | 26012-0608 | BATTERY,FTX9-BS,12V 8AH | | 1 | 1 | 1 | | |
| 26012A | 26012-0730 | BATTERY,FTX9-BS,12V 8AH | | | | | 1 | |
| 26031 | 26031-1531 | HARNESS,MAIN | | 1 | 1 | 1 | 1 | |
| 27002 | 27002-0007 | RELAY-ASSY | | 1 | 1 | 1 | 1 | |
| 27002A | 27002-1097 | RELAY-ASSY,SIGNAL LAMP | | 1 | 1 | 1 | 1 | |
| 27003 | 27003-0094 | HORN | | 1 | 1 | 1 | 1 | |
| 39156 | 39156-0096 | PAD,15X120X2 | | | | | | |
| | L---------- | | FR,UK | 2 | 2 | 2 | 2 | |
| 39156A | 39156-0291 | PAD,ECU GUARD | | | | | | |
| | L---------- | | FR,UK | 2 | 2 | 2 | 2 | |
| 39156B | 39156-0948 | PAD,FUEL GAUGE | | 1 | 1 | 1 | 1 | |
| 39156C | 39156-0988 | PAD,DIAG | | 1 | 1 | 1 | 1 | |
| 49006 | 49006-0573 | BOOT | | 1 | 1 | 1 | 1 | |
| 53044 | 53044-0567 | TRIM | | | | | | |
| | L---------- | | FR,UK | 1 | 1 | 1 | 1 | |
| 53044A | 53044-0568 | TRIM | | | | | | |
| | L---------- | | FR,UK | 1 | 1 | 1 | 1 | |
| 55020 | 55020-0869 | GUARD,ECU,UNDER | | | | | | |
| | L---------- | | FR,UK | 1 | 1 | 1 | 1 | |
| 55020A | 55020-0870 | GUARD,ECU,TOP | | | | | | |
| | L---------- | | FR,UK | 1 | 1 | 1 | 1 | |
| 56030 | 56030-0737 | LABEL,FUSE BOX 1 | | 1 | 1 | 1 | 1 | |
| 56030A | 56030-0784 | LABEL,FUSE BOX 2 | | 1 | 1 | 1 | 1 | |
| 92072 | 92072-1414 | BAND | | 17 | 17 | 17 | 17 | |
| 92153 | 92153-0906 | BOLT,6X12 | | | | | | |
| | L---------- | | FR,UK | 4 | 4 | 4 | 4 | |
| 92154 | 92154-1026 | BOLT,SOCKET,6X18 | | 1 | 1 | 1 | 1 | |
| 92154A | 92154-1050 | BOLT,FLANGED,6X12 | | 2 | 2 | 2 | 2 | |

# Ignition Switch

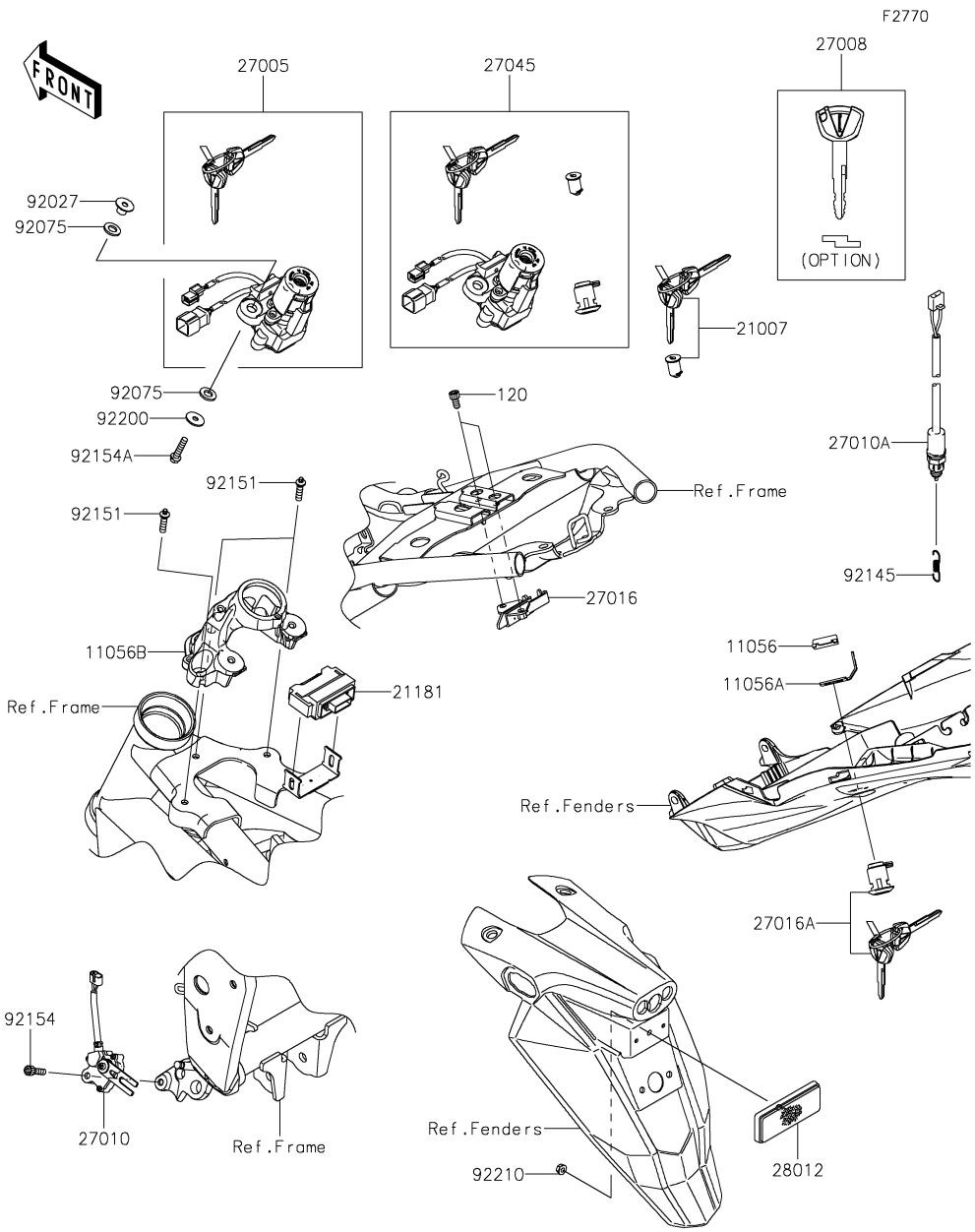


| Ref. No. | Part No. | Description | Spec Code | Quantity-ZR800 '13 ADS | '14 AEF | '15 AFF | '16 AGF | |
|---|---|---|---|---|---|---|---|---|
| 11056 | 11056-0238 | BRACKET,CLASP | | 1 | 1 | 1 | 1 | |
| 11056A | 11056-2119 | BRACKET,SEAT LOCK | | 1 | 1 | 1 | 1 | |
| 11056B | 11056-2394 | BRACKET | | 1 | 1 | 1 | 1 | |
| 21007 | 21007-5072 | ROTOR,LOCK,TANK,CAP | | 1 | 1 | 1 | 1 | |
| 21181 | 21181-0056 | AMPLIFIER,IMMOBI | | 1 | 1 | 1 | 1 | |
| 27005 | 27005-0581 | SWITCH-ASSY-IGNITION,IMMOBI | | 1 | 1 | 1 | 1 | |
| 27008 | 27008-0558 (OPTION) | KEY-LOCK,BLANK,IMMOBI | | 1 | 1 | 1 | 1 | |
| 27010 | 27010-0722 | SWITCH,SIDE STAND | | 1 | 1 | 1 | 1 | |
| 27010A | 27010-0723 | SWITCH,REAR BRAKE | | 1 | 1 | 1 | 1 | |
| 27016 | 27016-0008 | LOCK-ASSY,SEAT STRIKER | | 1 | 1 | 1 | 1 | |
| 27016A | 27016-5380 | LOCK-ASSY,SEAT | | 1 | 1 | 1 | 1 | |
| 27045 | 27045-5484 | SWITCH-ASSY | | 1 | 1 | 1 | 1 | |
| 28012 | 28012-1077 | REFLECTOR-REFLEX | | 1 | 1 | 1 | 1 | |
| 92027 | 92027-1045 | COLLAR,L=9.6 | | 2 | 2 | 2 | 2 | |
| 92075 | 92075-1564 | DAMPER | | 4 | 4 | 4 | 4 | |
| 92145 | 92145-0946 | SPRING,REAR BRAKE | | 1 | 1 | 1 | 1 | |
| 92151 | 92151-1946 | BOLT,TORX,6X22 | | 3 | 3 | 3 | 3 | |
| 92154 | 92154-0031 | BOLT,SOCKET,6X22 | | 1 | 1 | 1 | 1 | |
| 92154A | 92154-1212 | BOLT,FLANGED,6X25 | | 2 | 2 | 2 | 2 | |
| 92200 | 92200-0780 | WASHER,6X20X1.6 | | 2 | 2 | 2 | 2 | |
| 92210 | 92210-0007 | NUT,FLANGED,5MM | | 1 | 1 | 1 | 1 | |
| 120 | 120CB0612 | BOLT-SOCKET,6X12 | | 2 | 2 | 2 | 2 | |

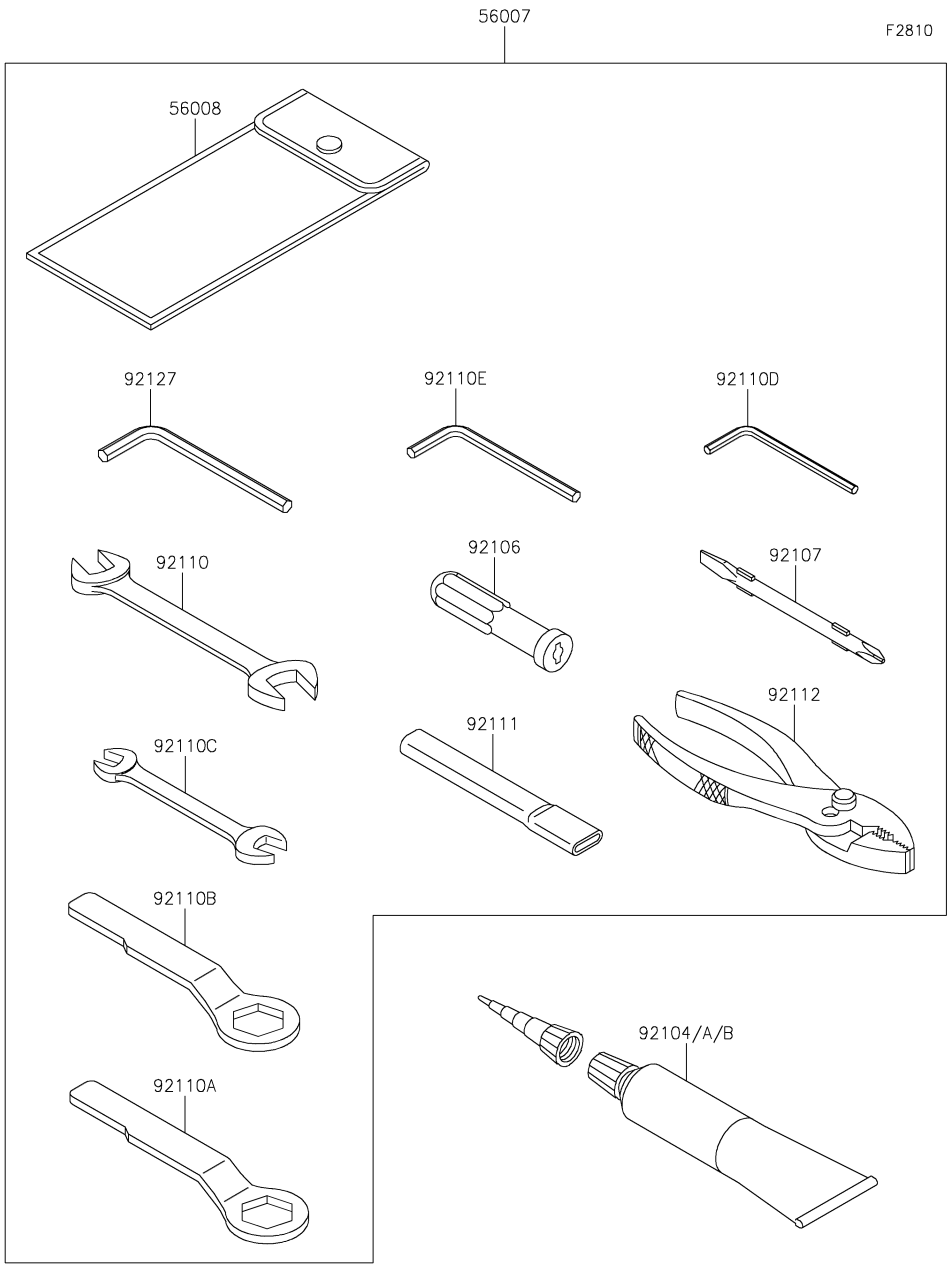


| Ref. No. | Part No. | Description | Spec Code | Quantity-ZR800 '13 ADS | '14 AEF | '15 AFF | '16 AGF | |
|---|---|---|---|---|---|---|---|---|
| 56007 | 56007-0108 | TOOL-KIT | | 1 | 1 | 1 | 1 | |
| 56008 | 56008-0036 | BAG,TOOL | | 1 | 1 | 1 | 1 | |
| 92104 | 92104-0004 | GASKET-LIQUID,TB1211F,CLEAR | | 1 | 1 | 1 | 1 | |
| 92104A | 92104-1064 | GASKET-LIQUID,TB1216B,BLACK | | 1 | 1 | 1 | 1 | |
| 92104B | 92104-2068 | GASKET-LIQUID,TB1207B,BLACK | | 1 | 1 | 1 | 1 | |
| 92106 | 92106-0004 | GRIP-SCREW DRIVER | | 1 | 1 | 1 | 1 | |
| 92107 | 92107-0019 | TOOL-DRIVER,#2PHILLIPS&SLOT | | 1 | 1 | 1 | 1 | |
| 92110 | 92110-0057 | TOOL-WRENCH,OPEN END,14X17 | | 1 | 1 | 1 | 1 | |
| 92110A | 92110-0064 | TOOL-WRENCH,BOX END,22MM | | 1 | 1 | 1 | 1 | |
| 92110B | 92110-0065 | TOOL-WRENCH,BOX END,27MM | | 1 | 1 | 1 | 1 | |
| 92110C | 92110-0564 | TOOL-WRENCH,OPEN END,10X12 | | 1 | 1 | 1 | 1 | |
| 92110D | 92110-0567 | TOOL-WRENCH,ALLEN,4MM | | 1 | 1 | 1 | 1 | |
| 92110E | 92110-1015 | TOOL-WRENCH,ALLEN,5MM | | 1 | 1 | 1 | 1 | |
| 92111 | 92111-0008 | TOOL-BAR,WRENCH | | 1 | 1 | 1 | 1 | |
| 92112 | 92112-0007 | TOOL-PLIERS | | 1 | 1 | 1 | 1 | |
| 92127 | 92127-003 | TOOL-WRENCH,ALLEN,6MM | | 1 | 1 | 1 | 1 | |

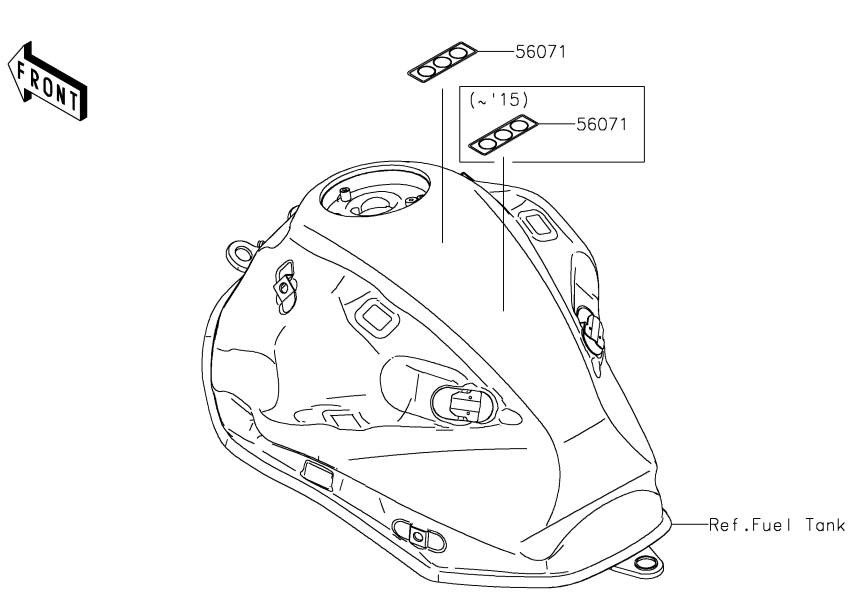


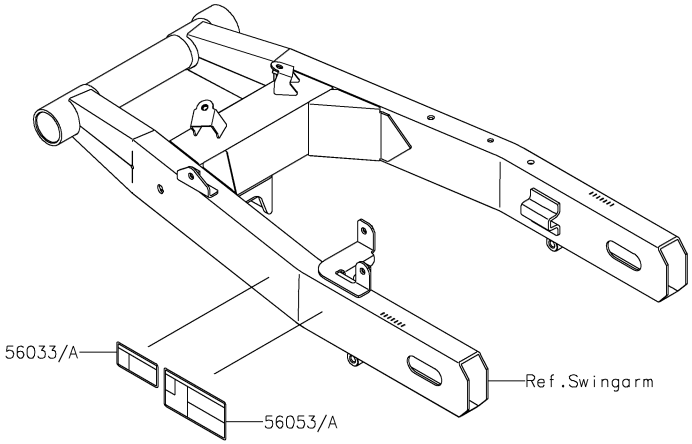


| Ref. No. | Part No. | Description | Spec Code | Quantity-ZR800 '13 ADS | '14 AEF | '15 AFF | '16 AGF | |
|---|---|---|---|---|---|---|---|---|
| 56033 | 56033-0742 | LABEL-MANUAL,CHAIN | | 1 | 1 | 1 | | |
| 56033A | 56033-0915 | LABEL-MANUAL,CHAIN | | | | | 1 | |
| 56053 | 56053-0622 | LABEL-SPECIFICATION,TIRE&LOAD | | 1 | 1 | 1 | | |
| 56053A | 56053-1121 | LABEL-SPECIFICATION,TIRE&LOAD | | | | | 1 | |
| 56071 | 56071-0368 | LABEL-WARNING,FUEL | | 1 | 1 | 1 | 1 | |

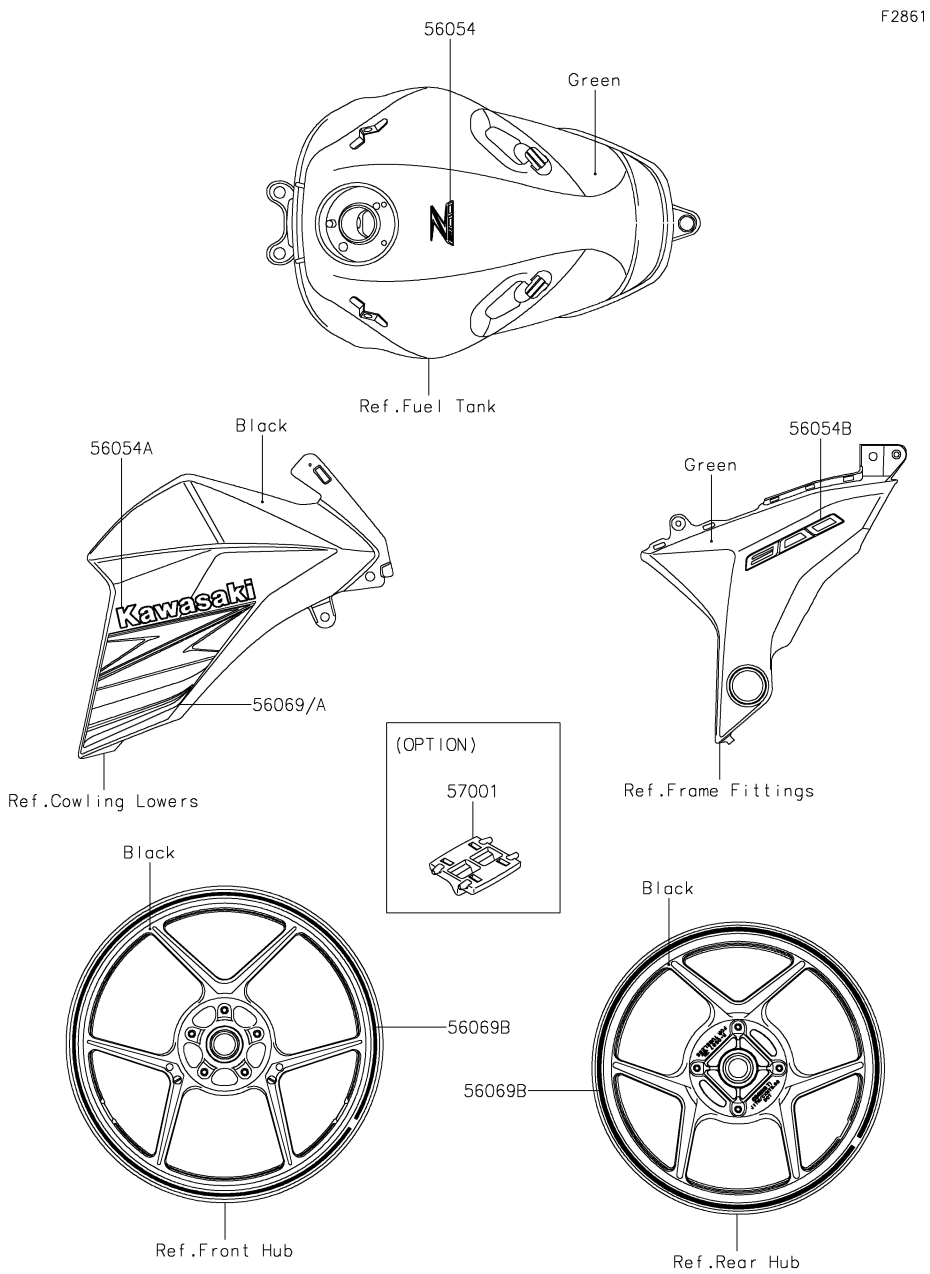


| Ref. No. | Part No. | Description | Spec Code | Quantity-ZR800 '13 ADS | '14 AEF | '15 AFF | '16 AGF | |
|---|---|---|---|---|---|---|---|---|
| 56054 | 56054-1120 | MARK,FUEL TANK,Z800 | | 1 | | | | |
| 56054A | 56054-1121 | MARK,SHROUD,KAWASAKI | | 2 | | | | |
| 56054B | 56054-1161 | MARK,PIVOT COVER,800 | | 2 | | | | |
| 56069 | 56069-2580 | PATTERN,SHROUD,LH | | 1 | | | | |
| 56069A | 56069-2581 | PATTERN,SHROUD,RH | | 1 | | | | |
| 56069B | 56069-2640 | PATTERN,WHEEL,GRN,6X1353 | | 4 | | | | |
| 57001 | 57001-1752 (OPTION) | RIM STRIPE APPLICATOR | | AR | | | | |

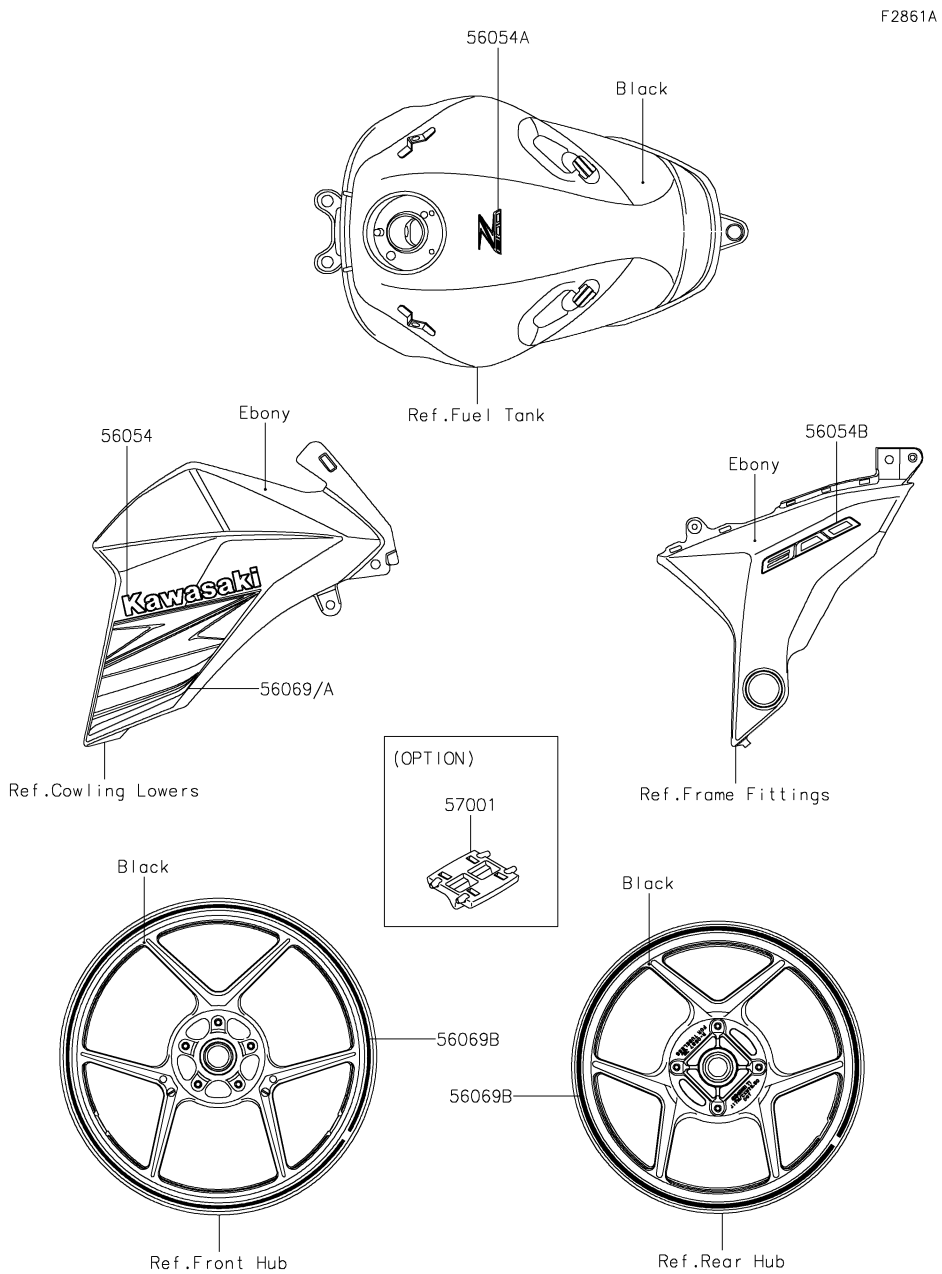


| Ref. No. | Part No. | Description | Spec Code | Quantity-ZR800 | | | | |
|---|---|---|---|---|---|---|---|---|
| | | | | '13 | '14 | '15 | '16 | |
| | | | | ADS | AEF | AFF | AGF | |
| 56054 | 56054-1121 | MARK,SHROUD,KAWASAKI | | 2 | | | | |
| 56054A | 56054-1123 | MARK,FUEL TANK,Z800 | | 1 | | | | |
| 56054B | 56054-1163 | MARK,PIVOT COVER,800 | | 2 | | | | |
| 56069 | 56069-2585 | PATTERN,SHROUD,LH | | 1 | | | | |
| 56069A | 56069-2586 | PATTERN,SHROUD,RH | | 1 | | | | |
| 56069B | 56069-2587 | PATTERN,WHEEL,RED,4X1353 | | 4 | | | | |
| 57001 | 57001-1752 (OPTION) | RIM STRIPE APPLICATOR | | AR | | | | |

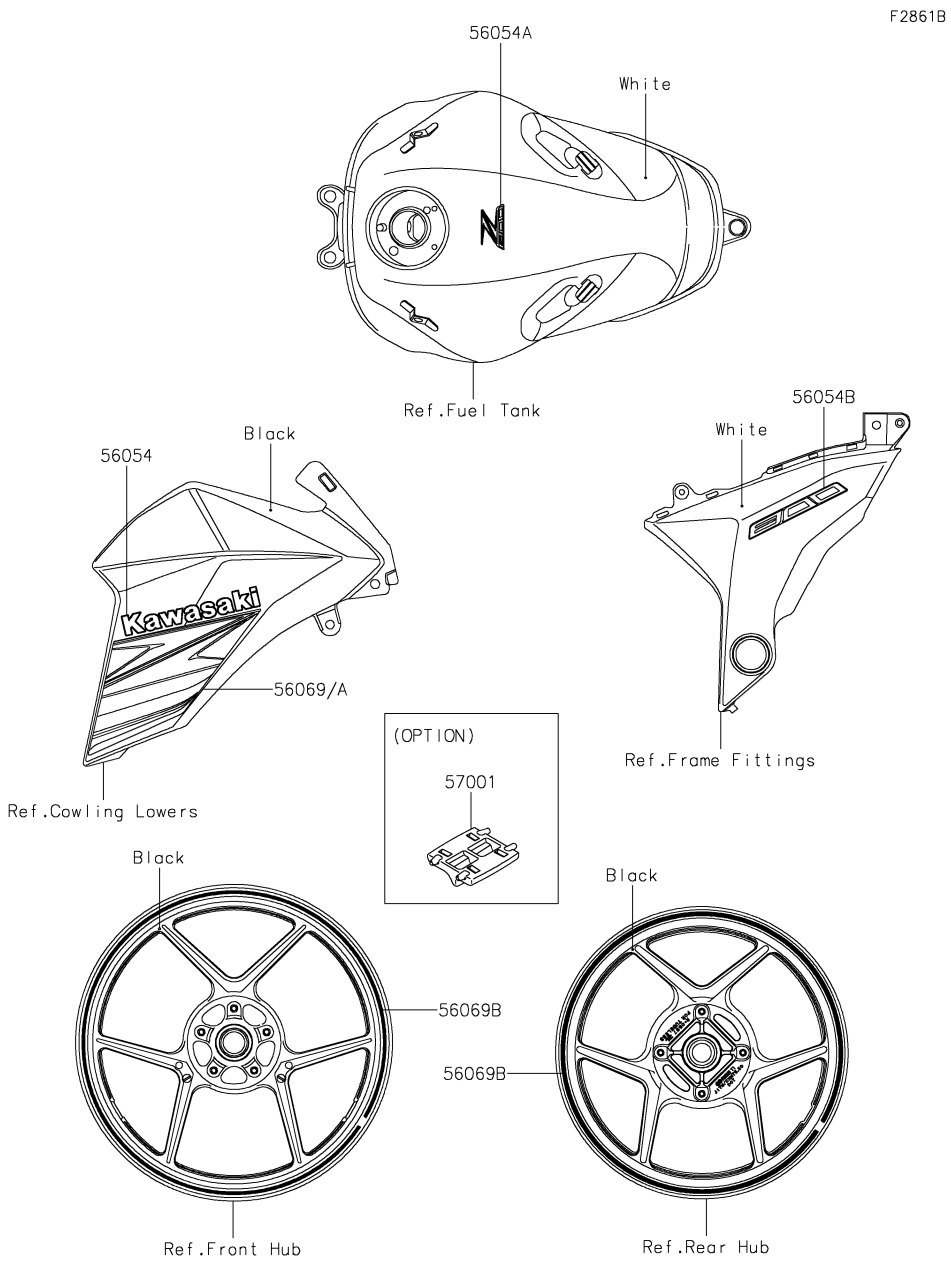


| Ref. No. | Part No. | Description | Spec Code | Quantity-ZR800 | | | | |
|---|---|---|---|---|---|---|---|---|
| | | | | '13 | '14 | '15 | '16 | |
| | | | | ADS | AEF | AFF | AGF | |
| 56054 | 56054-1121 | MARK,SHROUD,KAWASAKI | | 2 | | | | |
| 56054A | 56054-1122 | MARK,FUEL TANK,Z800 | | 1 | | | | |
| 56054B | 56054-1162 | MARK,PIVOT COVER,800 | | 2 | | | | |
| 56069 | 56069-2583 | PATTERN,SHROUD,LH | | 1 | | | | |
| 56069A | 56069-2584 | PATTERN,SHROUD,RH | | 1 | | | | |
| 56069B | 56069-2640 | PATTERN,WHEEL,GRN,6X1353 | | 4 | | | | |
| 57001 | 57001-1752 (OPTION) | RIM STRIPE APPLICATOR | | AR | | | | |

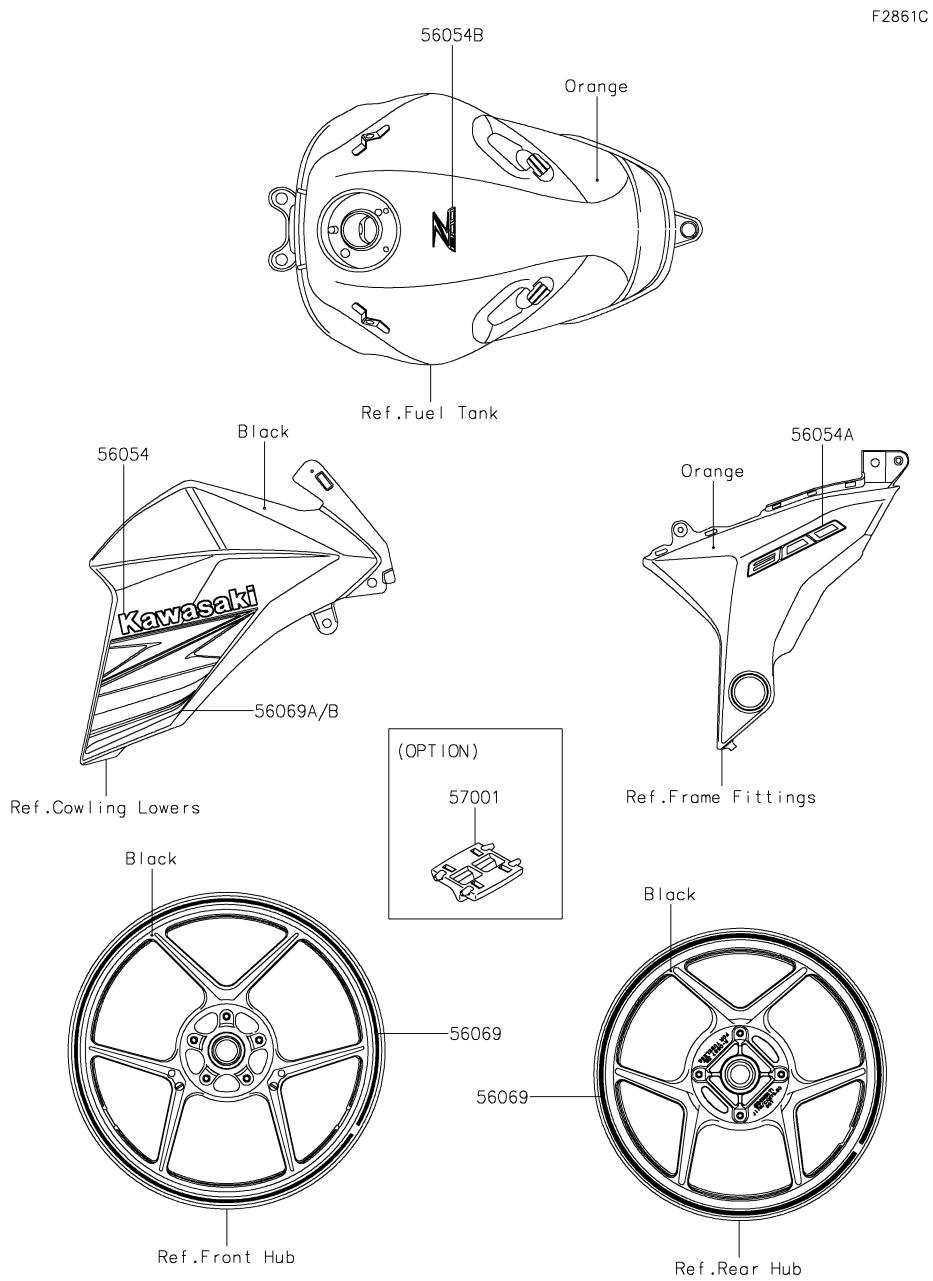


| Ref. No. | Part No. | Description | Spec Code | Quantity-ZR800 '13 ADS | '14 AEF | '15 AFF | '16 AGF | |
|---|---|---|---|---|---|---|---|---|
| 56054 | 56054-1121 | MARK,SHROUD,KAWASAKI | | 2 | | | | |
| 56054A | 56054-1162 | MARK,PIVOT COVER,800 | | 2 | | | | |
| 56054B | 56054-1284 | MARK,FUEL TANK,Z800 | | 1 | | | | |
| 56069 | 56069-2397 | PATTERN,WHEEL,ORANGE,4X1353 | | 4 | | | | |
| 56069A | 56069-4110 | PATTERN,SHROUD,LH | | 1 | | | | |
| 56069B | 56069-4111 | PATTERN,SHROUD,RH | | 1 | | | | |
| 57001 | 57001-1752 (OPTION) | RIM STRIPE APPLICATOR | | AR | | | | |

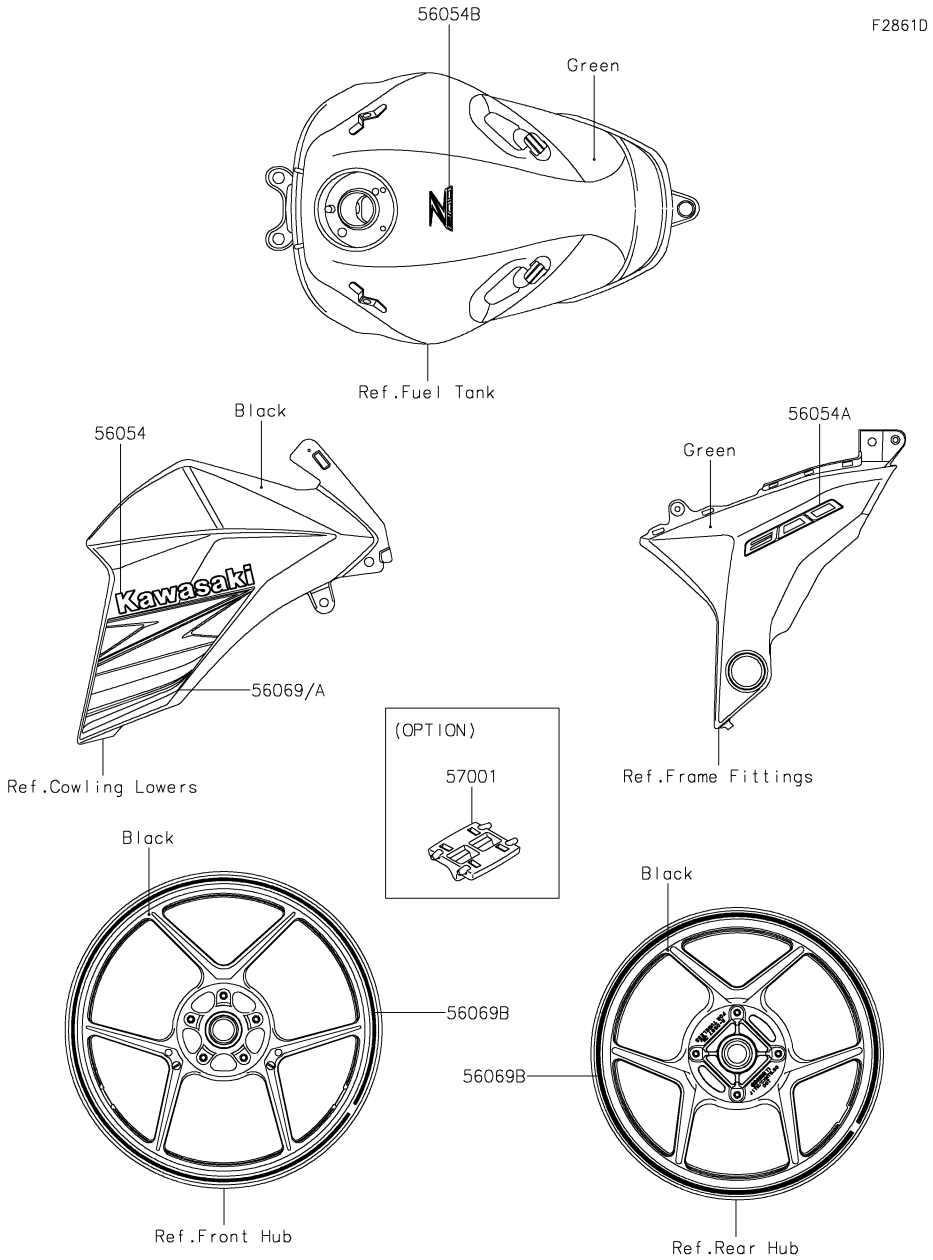


| Ref. No. | Part No. | Description | Spec Code | Quantity-ZR800 '13 ADS | '14 AEF | '15 AFF | '16 AGF | |
|---|---|---|---|---|---|---|---|---|
| 56054 | 56054-1121 | MARK,SHROUD,KAWASAKI | | 2 | | | | |
| 56054A | 56054-1161 | MARK,PIVOT COVER,800 | | 2 | | | | |
| 56054B | 56054-1336 | MARK,FUEL TANK,Z800 | | 1 | | | | |
| 56069 | 56069-2580 | PATTERN,SHROUD,LH | | 1 | | | | |
| 56069A | 56069-2581 | PATTERN,SHROUD,RH | | 1 | | | | |
| 56069B | 56069-2640 | PATTERN,WHEEL,GRN,6X1353 | | 4 | | | | |
| 57001 | 57001-1752 (OPTION) | RIM STRIPE APPLICATOR | | AR | | | | |

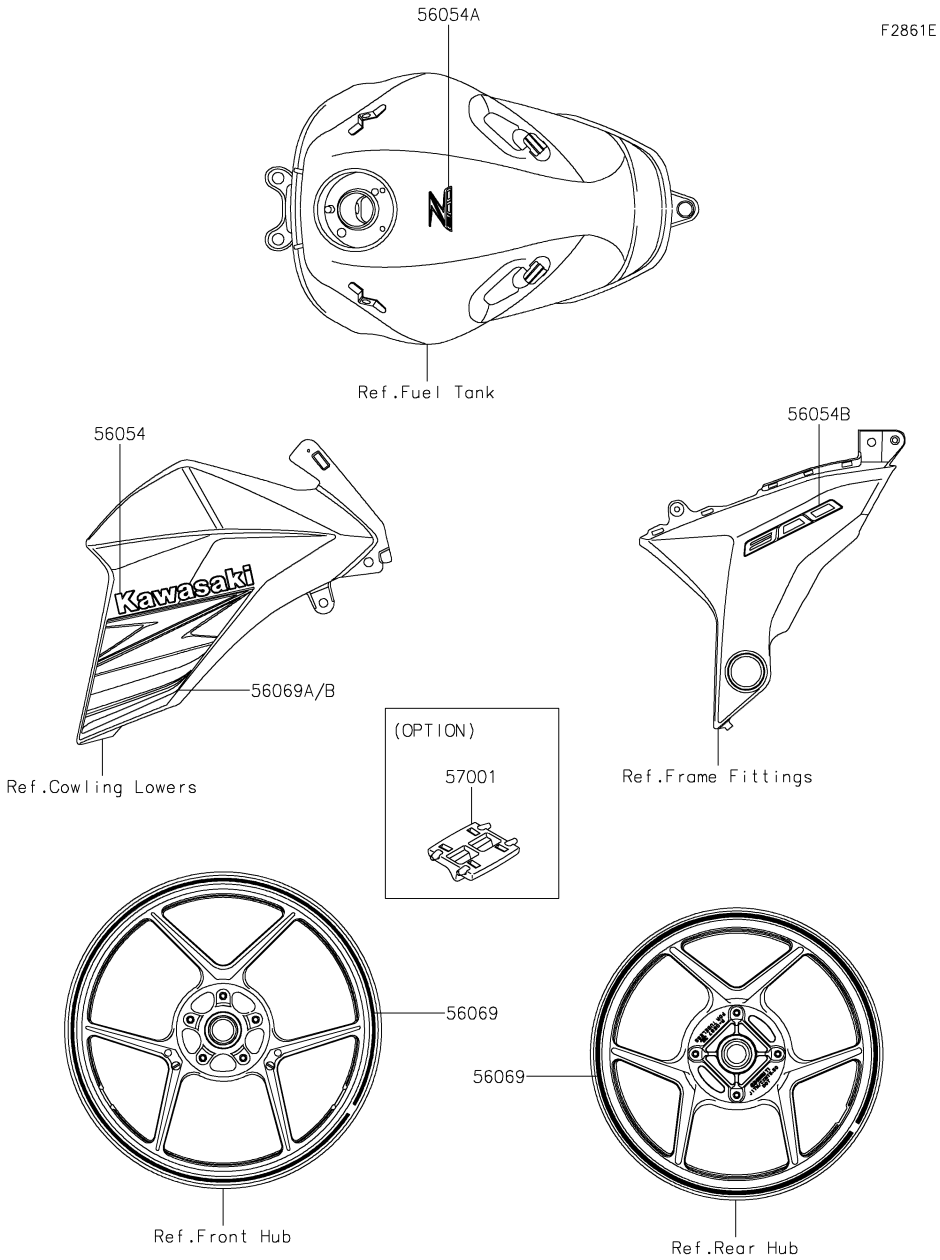


| Ref. No. | Part No. | Description | Spec Code | Quantity-ZR800 '13 ADS | '14 AEF | '15 AFF | '16 AGF | |
|---|---|---|---|---|---|---|---|---|
| 56054 | 56054-1121 | MARK,SHROUD,KAWASAKI | | 2 | | | | |
| 56054A | 56054-1286 | MARK,FUEL TANK,Z800 | | 1 | | | | |
| 56054B | 56054-1287 | MARK,PIVOT COVER,800 | | 2 | | | | |
| 56069 | 56069-2640 | PATTERN,WHEEL,GRN,6X1353 | | 4 | | | | |
| 56069A | 56069-4112 | PATTERN,SHROUD,LH | | 1 | | | | |
| 56069B | 56069-4113 | PATTERN,SHROUD,RH | | 1 | | | | |
| 57001 | 57001-1752 (OPTION) | RIM STRIPE APPLICATOR | | AR | | | | |

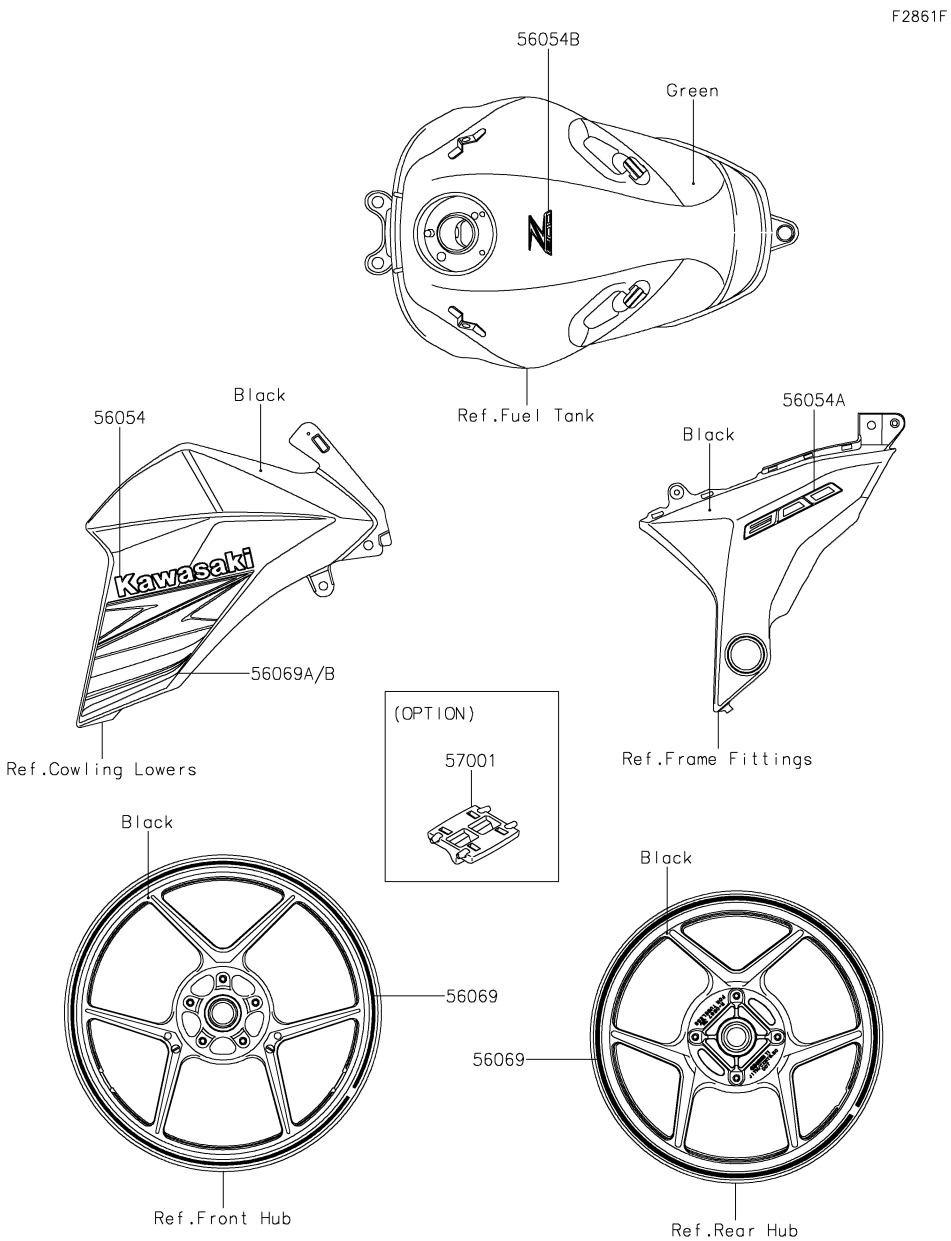


| Ref. No. | Part No. | Description | Spec Code | Quantity-ZR800 '13 ADS | '14 AEF | '15 AFF | '16 AGF | |
|---|---|---|---|---|---|---|---|---|
| 56054 | 56054-1121 | MARK,SHROUD,KAWASAKI | | | | 2 | | |
| 56054A | 56054-1287 | MARK,PIVOT COVER,800 | | | | 2 | | |
| 56054B | 56054-1336 | MARK,FUEL TANK,Z800 | | | | 1 | | |
| 56069 | 56069-2640 | PATTERN,WHEEL,GRN,6X1353 | | | | 4 | | |
| 56069A | 56069-7726 | PATTERN,SHROUD,LH | | | | 1 | | |
| 56069B | 56069-7727 | PATTERN,SHROUD,RH | | | | 1 | | |
| 57001 | 57001-1752 (OPTION) | RIM STRIPE APPLICATOR | | | | AR | | |

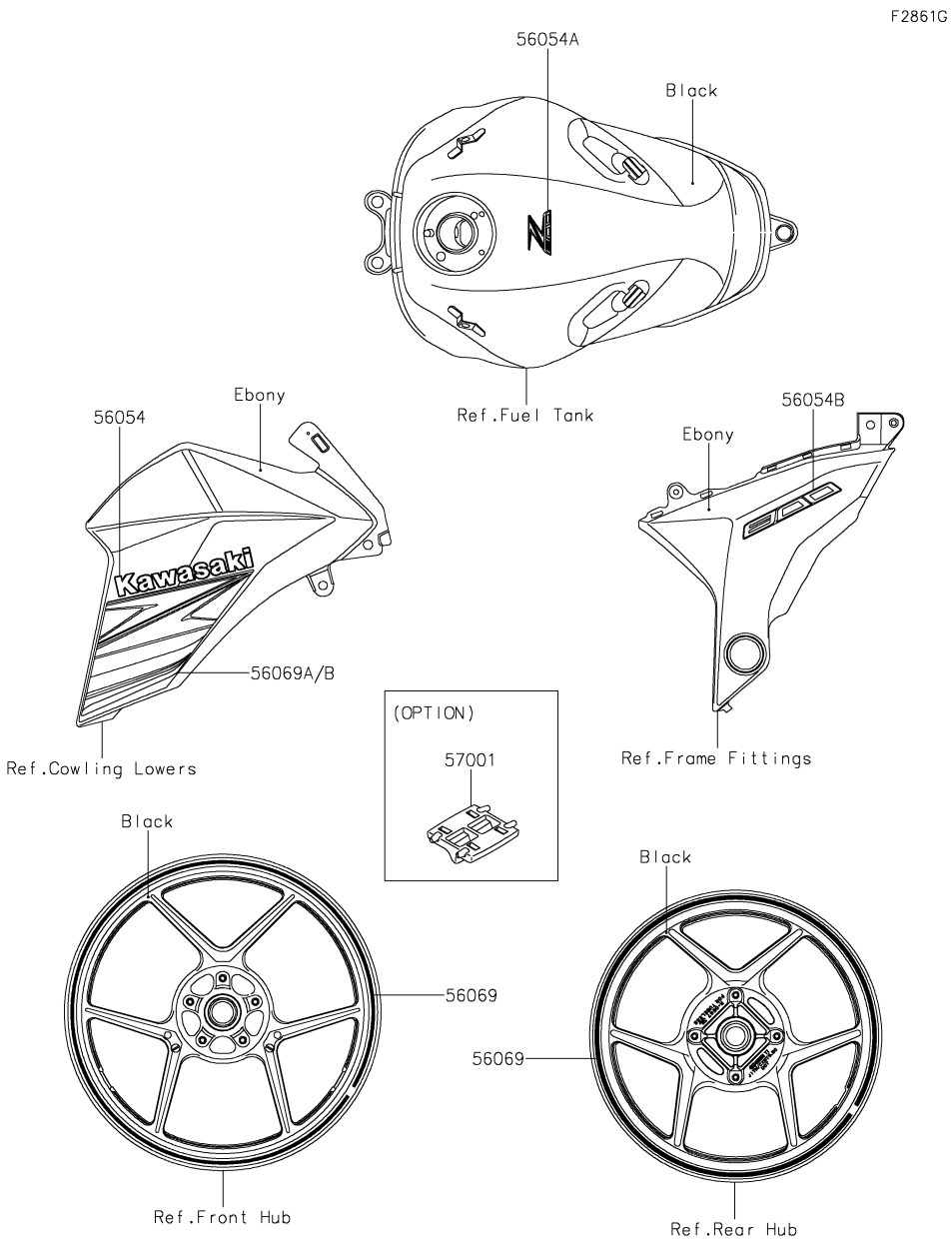


| Ref. No. | Part No. | Description | Spec Code | Quantity-ZR800 '13 ADS | '14 AEF | '15 AFF | '16 AGF | |
|---|---|---|---|---|---|---|---|---|
| 56054 | 56054-1121 | MARK,SHROUD,KAWASAKI | | | | 2 | | |
| 56054A | 56054-1286 | MARK,FUEL TANK,Z800 | | | | 1 | | |
| 56054B | 56054-1584 | MARK,PIVOT COVER,800 | | | | 2 | | |
| 56069 | 56069-2640 | PATTERN,WHEEL,GRN,6X1353 | | | | 4 | | |
| 56069A | 56069-7728 | PATTERN,SHROUD,LH | | | | 1 | | |
| 56069B | 56069-7729 | PATTERN,SHROUD,RH | | | | 1 | | |
| 57001 | 57001-1752 (OPTION) | RIM STRIPE APPLICATOR | | | | AR | | |

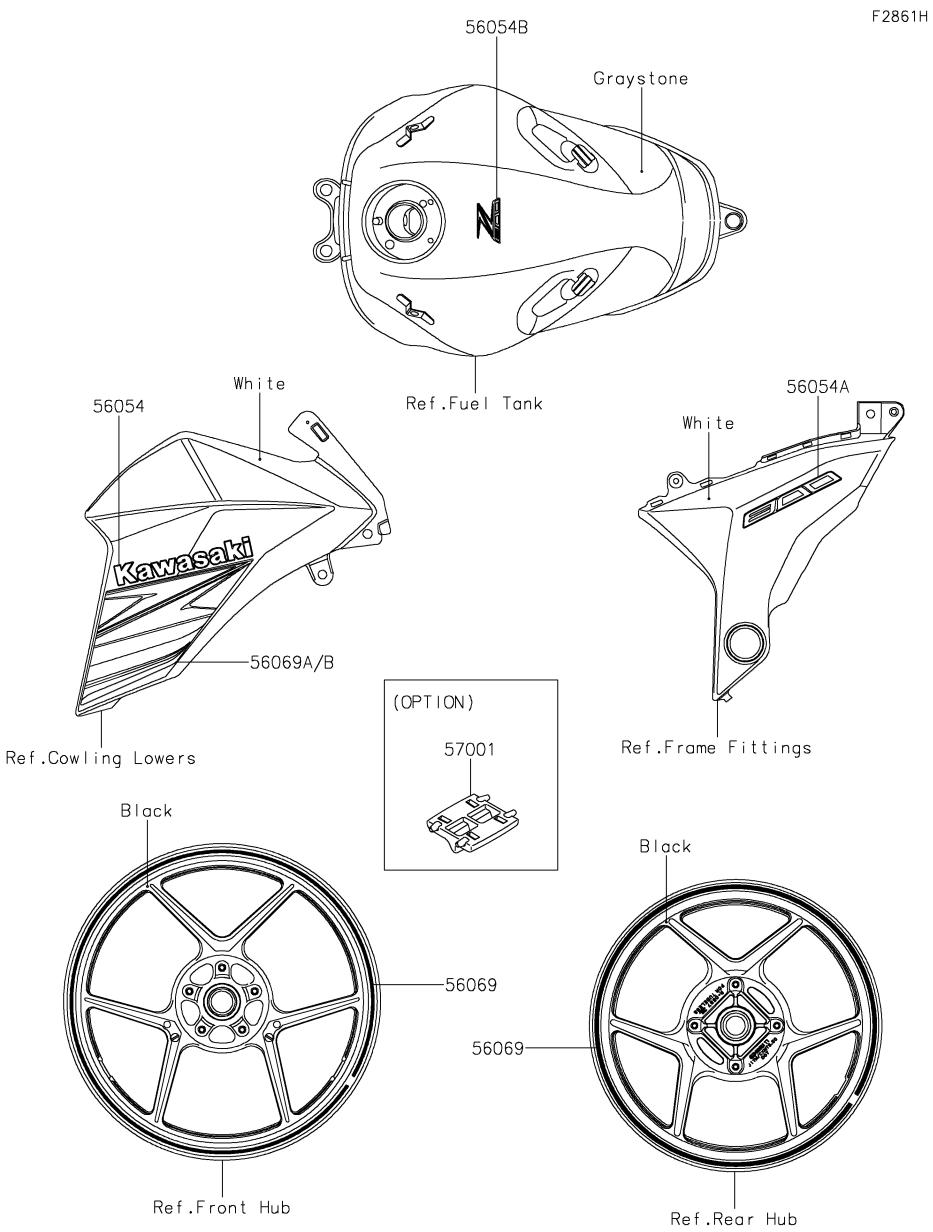


| Ref. No. | Part No. | Description | Spec Code | Quantity-ZR800 '13 ADS | '14 AEF | '15 AFF | '16 AGF | |
|---|---|---|---|---|---|---|---|---|
| 56054 | 56054-1121 | MARK,SHROUD,KAWASAKI | | | | 2 | | |
| 56054A | 56054-1162 | MARK,PIVOT COVER,800 | | | | 2 | | |
| 56054B | 56054-1585 | MARK,FUEL TANK,Z800 | | | | 1 | | |
| 56069 | 56069-2640 | PATTERN,WHEEL,GRN,6X1353 | | | | 4 | | |
| 56069A | 56069-7730 | PATTERN,SHROUD,LH | | | | 1 | | |
| 56069B | 56069-7731 | PATTERN,SHROUD,RH | | | | 1 | | |
| 57001 | 57001-1752 (OPTION) | RIM STRIPE APPLICATOR | | | | AR | | |

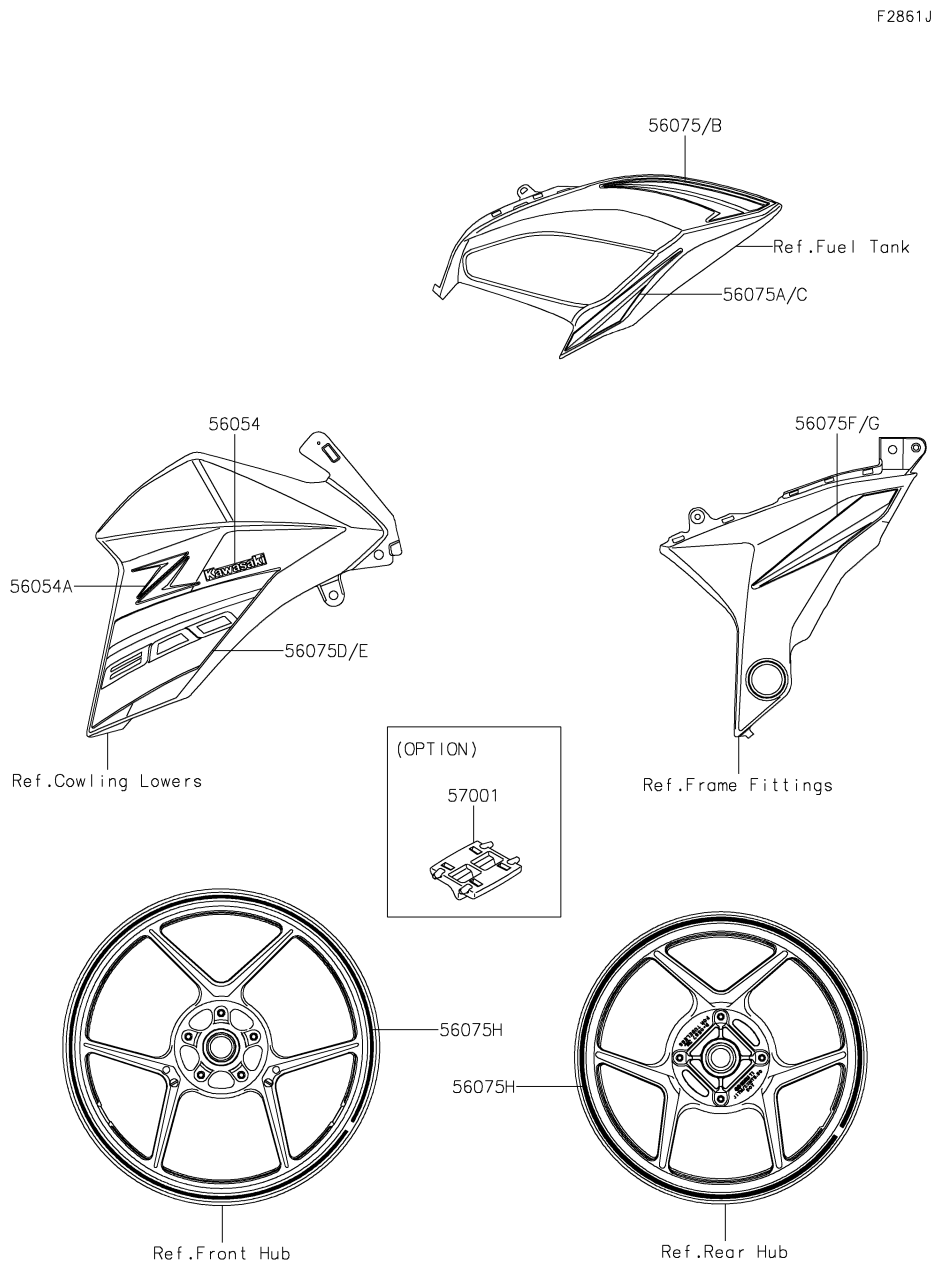


| Ref. No. | Part No. | Description | Spec Code | Quantity-ZR800 '13 ADS | '14 AEF | '15 AFF | '16 AGF | |
|---|---|---|---|---|---|---|---|---|
| 56054 | 56054-1913 | MARK,SHROUD,KAWASAKI | | | | | 2 | |
| 56054A | 56054-1914 | MARK,SHROUD,Z | | | | | 2 | |
| 56075 | 56075-1188 | PATTERN,TANK COVER,LH,UPP | | | | | 1 | |
| 56075A | 56075-1189 | PATTERN,TANK COVER,LH,LWR | | | | | 1 | |
| 56075B | 56075-1190 | PATTERN,TANK COVER,RH,UPP | | | | | 1 | |
| 56075C | 56075-1191 | PATTERN,TANK COVER,RH,LWR | | | | | 1 | |
| 56075D | 56075-1192 | PATTERN,SHROUD,LH | | | | | 1 | |
| 56075E | 56075-1193 | PATTERN,SHROUD,RH | | | | | 1 | |
| 56075F | 56075-1194 | PATTERN,PIVOT COVER,LH | | | | | 1 | |
| 56075G | 56075-1195 | PATTERN,PIVOT COVER,RH | | | | | 1 | |
| 56075H | 56075-1196 | PATTERN,WHEEL,RED,4X1353 | | | | | 4 | |
| 57001 | 57001-1752 (OPTION) | RIM STRIPE APPLICATOR | | | | | AR | |

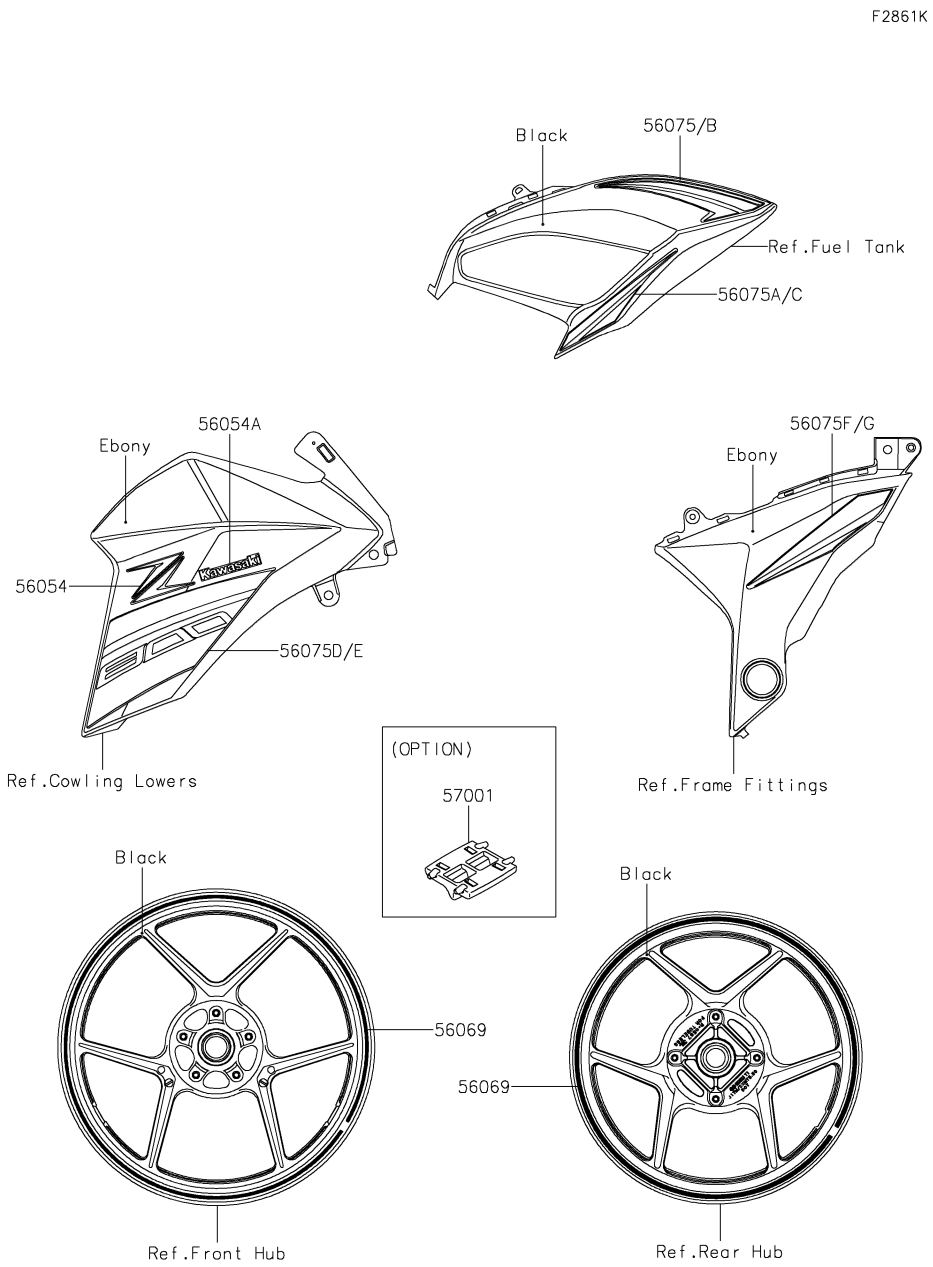


| Ref. No. | Part No. | Description | Spec Code | Quantity-ZR800 '13 ADS | '14 AEF | '15 AFF | '16 AGF | |
|---|---|---|---|---|---|---|---|---|
| 56054 | 56054-1914 | MARK,SHROUD,Z | | | | | 2 | |
| 56054A | 56054-1922 | MARK,SHROUD,KAWASAKI | | | | | 2 | |
| 56069 | 56069-2640 | PATTERN,WHEEL,GRN,6X1353 | | | | | 4 | |
| 56075 | 56075-1197 | PATTERN,TANK COVER,LH,UPP | | | | | 1 | |
| 56075A | 56075-1198 | PATTERN,TANK COVER,LH,LWR | | | | | 1 | |
| 56075B | 56075-1199 | PATTERN,TANK COVER,RH,UPP | | | | | 1 | |
| 56075C | 56075-1200 | PATTERN,TANK COVER,RH,LWR | | | | | 1 | |
| 56075D | 56075-1201 | PATTERN,SHROUD,LH | | | | | 1 | |
| 56075E | 56075-1202 | PATTERN,SHROUD,RH | | | | | 1 | |
| 56075F | 56075-1203 | PATTERN,PIVOT COVER,LH | | | | | 1 | |
| 56075G | 56075-1204 | PATTERN,PIVOT COVER,RH | | | | | 1 | |
| 57001 | 57001-1752 (OPTION) | RIM STRIPE APPLICATOR | | | | | AR | |

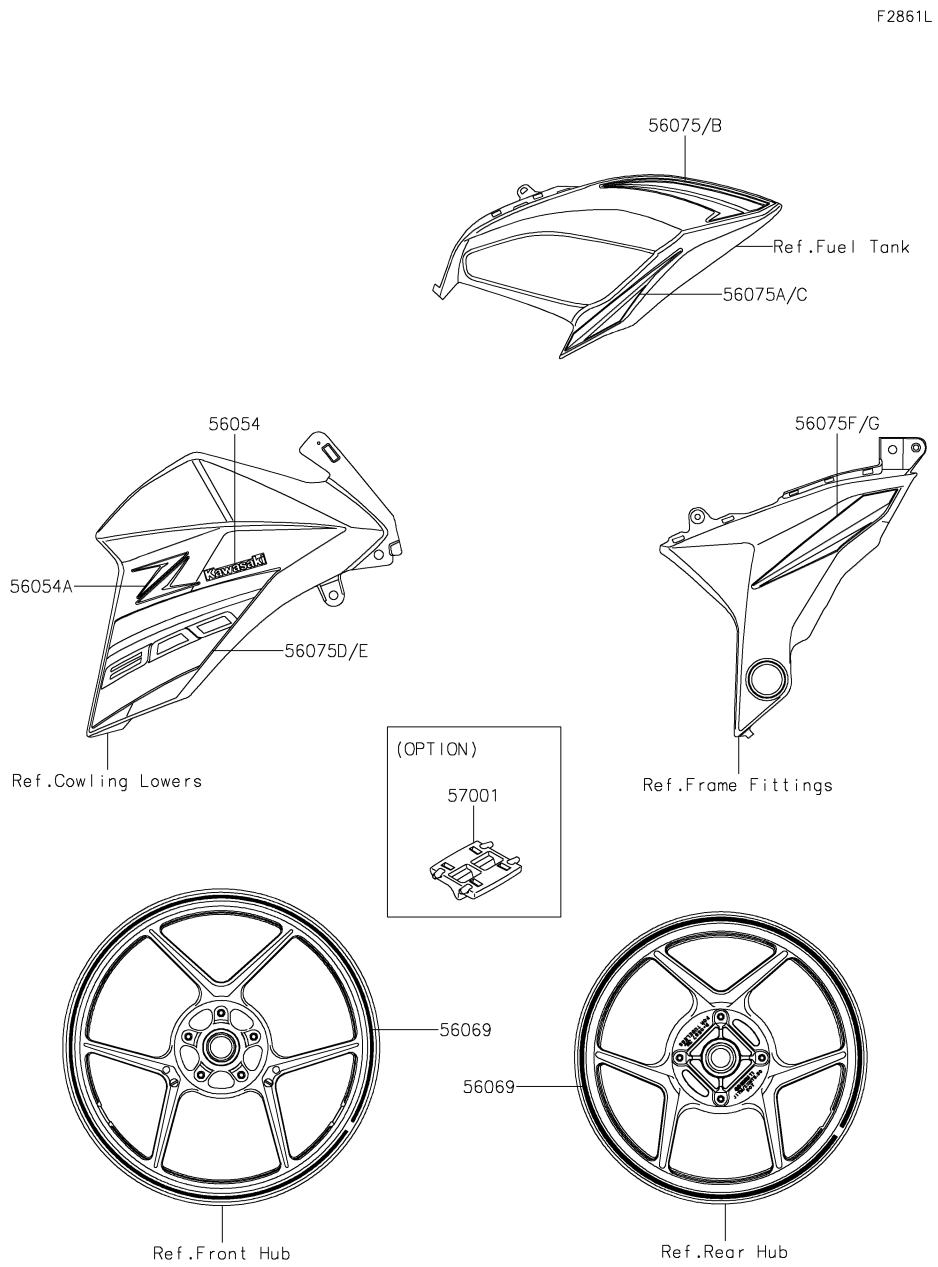


| Ref. No. | Part No. | Description | Spec Code | Quantity-ZR800 '13 ADS | '14 AEF | '15 AFF | '16 AGF | |
|---|---|---|---|---|---|---|---|---|
| 56054 | 56054-1913 | MARK,SHROUD,KAWASAKI | | | | | 2 | |
| 56054A | 56054-1914 | MARK,SHROUD,Z | | | | | 2 | |
| 56069 | 56069-2640 | PATTERN,WHEEL,GRN,6X1353 | | | | | 4 | |
| 56075 | 56075-1205 | PATTERN,TANK COVER,LH,UPP | | | | | 1 | |
| 56075A | 56075-1206 | PATTERN,TANK COVER,LH,LWR | | | | | 1 | |
| 56075B | 56075-1207 | PATTERN,TANK COVER,RH,UPP | | | | | 1 | |
| 56075C | 56075-1208 | PATTERN,TANK COVER,RH,LWR | | | | | 1 | |
| 56075D | 56075-1209 | PATTERN,SHROUD,LH | | | | | 1 | |
| 56075E | 56075-1210 | PATTERN,SHROUD,RH | | | | | 1 | |
| 56075F | 56075-1211 | PATTERN,PIVOT COVER,LH | | | | | 1 | |
| 56075G | 56075-1212 | PATTERN,PIVOT COVER,RH | | | | | 1 | |
| 57001 | 57001-1752 (OPTION) | RIM STRIPE APPLICATOR | | | | | AR | |

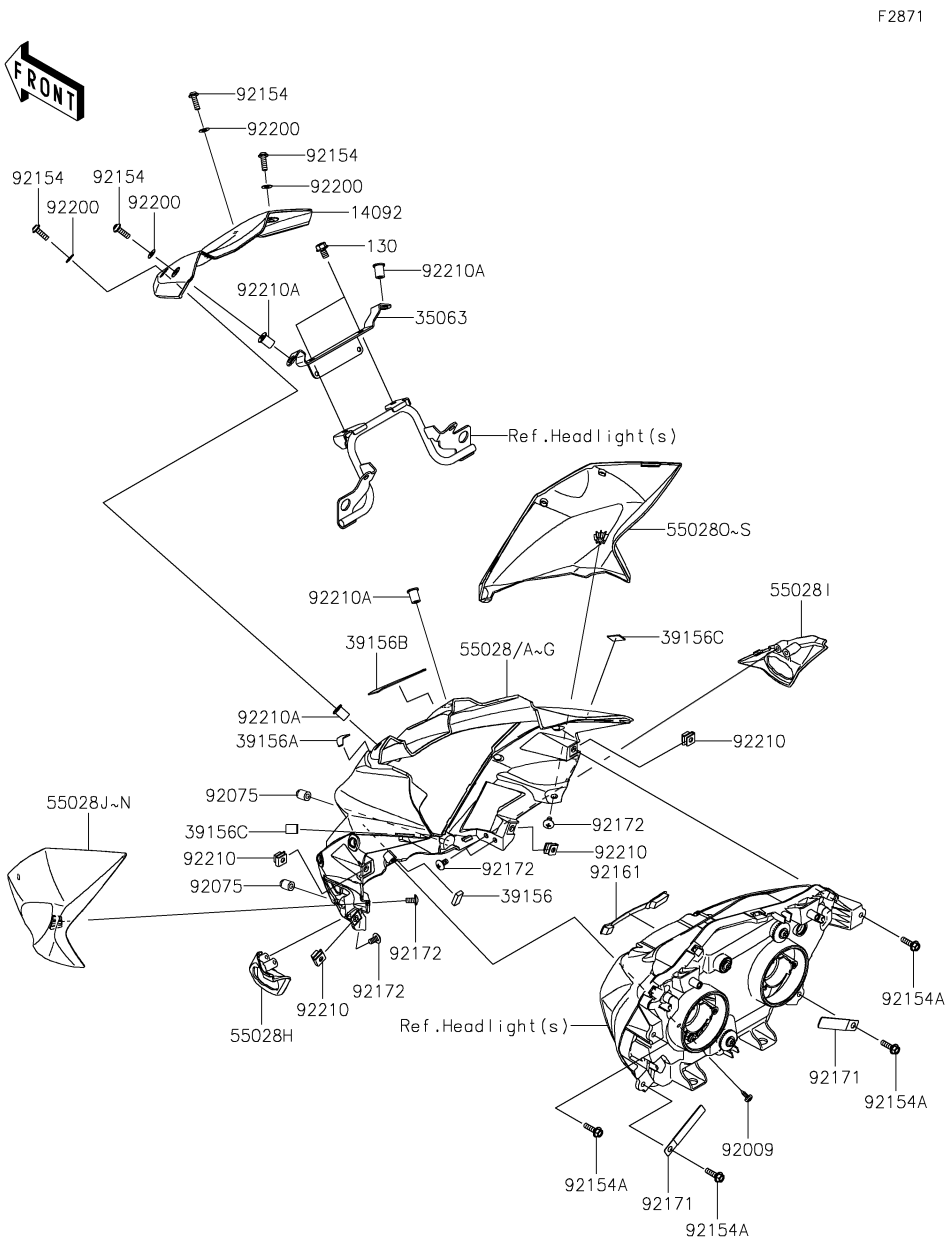


| Ref. No. | Part No. | Description | Spec Code | Quantity-ZR800 '13 ADS | '14 AEF | '15 AFF | '16 AGF | |
|---|---|---|---|---|---|---|---|---|
| 14092 | 14092-0964 | COVER,METER | | 1 | 1 | 1 | 1 | |
| 35063 | 35063-0867 | STAY | | 1 | 1 | 1 | 1 | |
| 39156 | 39156-0284 | PAD | | 1 | 1 | 1 | 1 | |
| 39156A | 39156-0964 | PAD | | 1 | 1 | 1 | 1 | |
| 39156B | 39156-0965 | PAD | | 1 | 1 | 1 | 1 | |
| 39156C | 39156-0966 | PAD | | 2 | 2 | 2 | 2 | |
| 55028 | 55028-0428-15T | COWLING,UPP,CNT,C.B.ORANGE | | | 1 | | | |
| 55028A | 55028-0428-25Y | COWLING,UPP,CNT,P.S.WHITE | | 1 | | | 1 | |
| 55028B | 55028-0428-35B | COWLING,UPP,CNT,M.F.R.GRAY | | | | 1 | | |
| 55028C | 55028-0428-35K | COWLING,UPP,CNT,C.F.B.GREEN | | | 1 | 1 | | |
| 55028D | 55028-0428-45L | COWLING,UPP,CNT,F.EBONY | | | | | 1 | |
| 55028E | 55028-0428-45Q | COWLING,UPP,CNT,C.F.B.GREEN | | 1 | | | | |
| 55028F | 55028-0428-660 | COWLING,UPP,CNT,M.S.BLACK | | 1 | 1 | 1 | | |
| 55028G | 55028-0428-739 | COWLING,UPP,CNT,M.F.S.BLACK | | | | | 1 | |
| 55028H | 55028-0429 | COWLING,UPP,CNT,LH | | 1 | 1 | 1 | 1 | |
| 55028I | 55028-0430 | COWLING,UPP,CNT,RH | | 1 | 1 | 1 | 1 | |
| 55028J | 55028-0431-25Y | COWLING,UPP,SIDE,LH,P.S.WHITE | | | | 1 | | |
| 55028K | 55028-0431-35L | COWLING,UPP,SIDE,LH,F.EBONY | | 1 | | | | |
| 55028L | 55028-0431-45L | COWLING,UPP,SIDE,LH,F.EBONY | | | | 1 | | |
| 55028M | 55028-0431-660 | COWLING,UPP,SIDE,LH,M.S.BLACK | | 1 | 1 | 1 | 1 | |
| 55028N | 55028-0431-739 | COWLING,UPP,SIDE,LH,M.F.S.BLK | | | 1 | | | |
| 55028O | 55028-0432-25Y | COWLING,UPP,SIDE,RH,P.S.WHITE | | | | 1 | | |
| 55028P | 55028-0432-35L | COWLING,UPP,SIDE,RH,F.EBONY | | 1 | | | | |
| 55028Q | 55028-0432-45L | COWLING,UPP,SIDE,RH,F.EBONY | | | | 1 | | |
| 55028R | 55028-0432-660 | COWLING,UPP,SIDE,RH,M.S.BLACK | | 1 | 1 | 1 | 1 | |
| 55028S | 55028-0432-739 | COWLING,UPP,SIDE,RH,M.F.S.BLK | | | 1 | | | |
| 92009 | 92009-1138 | SCREW,TAPPING,5X12,BLACK | | 1 | 1 | 1 | 1 | |
| 92075 | 92075-1964 | DAMPER | | 2 | 2 | 2 | 2 | |
| 92154 | 92154-0026 | BOLT,SOCKET,5X16 | | 4 | 4 | 4 | 4 | |
| 92154A | 92154-0785 | BOLT,FLANGED,5X18 | | 4 | 4 | 4 | 4 | |
| 92161 | 92161-0625 | DAMPER | | 1 | 1 | 1 | 1 | |
| 92171 | 92171-0652 | CLAMP,L=60 | | 2 | 2 | 2 | 2 | |
| 92172 | 92172-0262 | SCREW,TAPPING,5X10 | | 6 | 6 | 6 | 6 | |
| 92200 | 92200-1480 | WASHER,NYLON,5.3X11.5X0.5 | | 4 | 4 | 4 | 4 | |
| 92210 | 92210-0351 | NUT,5MM | | 4 | 4 | 4 | 4 | |
| 92210A | 92210-0498 | NUT,WELL,5MM | | 4 | 4 | 4 | 4 | |
| 130 | 130BB0610 | BOLT-FLANGED,6X10 | | 2 | 2 | 2 | 2 | |

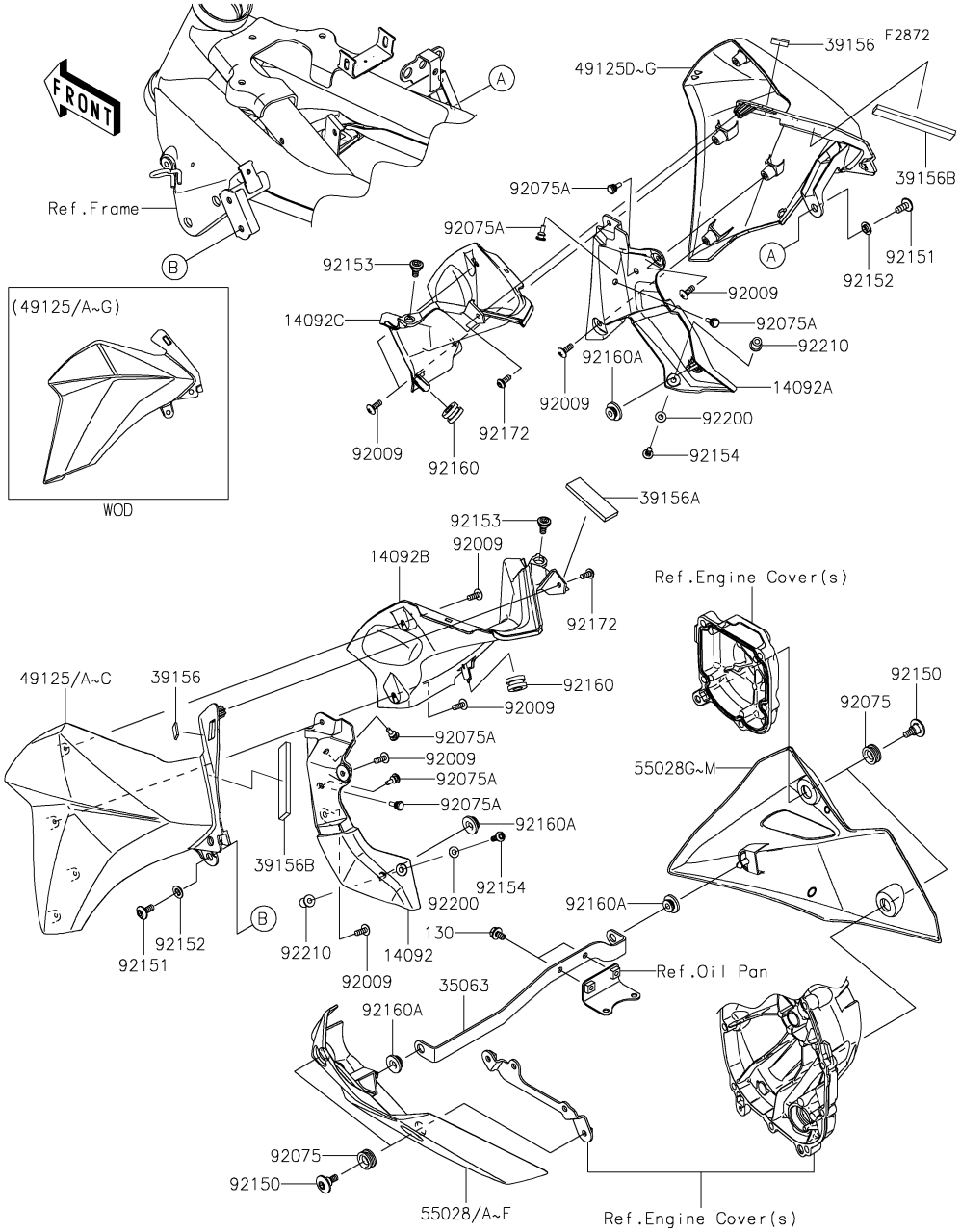


| Ref. No. | Part No. | Description | Spec Code | Quantity-ZR800 '13 ADS | '14 AEF | '15 AFF | '16 AGF | |
|---|---|---|---|---|---|---|---|---|
| 14092 | 14092-0965 | COVER,RADIATOR,LH | | 1 | 1 | 1 | 1 | |
| 14092A | 14092-0966 | COVER,RADIATOR,RH | | 1 | 1 | 1 | 1 | |
| 14092B | 14092-0967 | COVER,SHROUD,INNER,LH | | 1 | 1 | 1 | 1 | |
| 14092C | 14092-0968 | COVER,SHROUD,INNER,RH | | 1 | 1 | 1 | 1 | |
| 35063 | 35063-0868 | STAY,COWLING | | 1 | 1 | 1 | 1 | |
| 39156 | 39156-0389 | PAD,HEAT GUARD | | 2 | 2 | 2 | 2 | |
| 39156A | 39156-0950 | PAD,20X60X5 | | 1 | 1 | 1 | 1 | |
| 39156B | 39156-0975 | PAD,15X90X5 | | 2 | 2 | 2 | 2 | |
| 49125 | 49125-0584-25Y | SHROUD,LH,P.S.WHITE | | | | 1 | | |
| 49125A | 49125-0584-45L | SHROUD,LH,F.EBONY | | 1 | | 1 | 1 | |
| 49125B | 49125-0584-660 | SHROUD,LH,M.S.BLACK | | 1 | 1 | 1 | 1 | |
| 49125C | 49125-0584-739 | SHROUD,LH,M.F.S.BLACK | | | 1 | | | |
| 49125D | 49125-0585-25Y | SHROUD,RH,P.S.WHITE | | | | 1 | | |
| 49125E | 49125-0585-45L | SHROUD,RH,F.EBONY | | 1 | | 1 | 1 | |
| 49125F | 49125-0585-660 | SHROUD,RH,M.S.BLACK | | 1 | 1 | 1 | 1 | |
| 49125G | 49125-0585-739 | SHROUD,RH,M.F.S.BLACK | | | 1 | | | |
| 55028 | 55028-0433-15T | COWLING,LWR,LH,C.B.ORANGE | | | 1 | | | |
| 55028A | 55028-0433-25Y | COWLING,LWR,LH,P.S.WHITE | | 1 | | 1 | | |
| 55028B | 55028-0433-35K | COWLING,LWR,LH,C.F.B.GREEN | | | 1 | 1 | | |
| 55028C | 55028-0433-45L | COWLING,LWR,LH,F.EBONY | | 1 | | 1 | 1 | |
| 55028D | 55028-0433-45Q | COWLING,LWR,LH,C.F.B.GREEN | | 1 | | | | |
| 55028E | 55028-0433-45W | COWLING,LWR,LH,M.G.GRAY | | | | | 1 | |
| 55028F | 55028-0433-660 | COWLING,LWR,LH,M.S.BLACK | | | 1 | | | |
| 55028G | 55028-0434-15T | COWLING,LWR,RH,C.B.ORANGE | | | 1 | | | |
| 55028H | 55028-0434-25Y | COWLING,LWR,RH,P.S.WHITE | | 1 | | 1 | | |
| 55028I | 55028-0434-35K | COWLING,LWR,RH,C.F.B.GREEN | | | 1 | 1 | | |
| 55028J | 55028-0434-45L | COWLING,LWR,RH,F.EBONY | | 1 | | 1 | 1 | |
| 55028K | 55028-0434-45Q | COWLING,LWR,RH,C.F.B.GREEN | | 1 | | | | |
| 55028L | 55028-0434-45W | COWLING,LWR,RH,M.G.GRAY | | | | | 1 | |
| 55028M | 55028-0434-660 | COWLING,LWR,RH,M.S.BLACK | | | 1 | | | |
| 92009 | 92009-1197 | SCREW,TAPPING,5X14 | | 8 | 8 | 8 | 8 | |
| 92075 | 92075-1634 | DAMPER | | 4 | 4 | 4 | 4 | |
| 92075A | 92075-1808 | DAMPER,6X10X15 | | 6 | 6 | 6 | 6 | |
| 92150 | 92150-1154 | BOLT,SOCKET,6MM | | 4 | 4 | 4 | 4 | |
| 92151 | 92151-1654 | BOLT,SOCKET,6X14 | | 2 | 2 | 2 | 2 | |
| 92152 | 92152-1702 | COLLAR,6.4X8X3.3 | | 2 | 2 | 2 | 2 | |
| 92153 | 92153-1956 | BOLT,SOCKET,6MM | | 2 | 2 | 2 | 2 | |
| 92154 | 92154-0026 | BOLT,SOCKET,5X16 | | 2 | 2 | 2 | 2 | |
| 92160 | 92160-1167 | DAMPER,10X20X12 | | 2 | 2 | 2 | 2 | |
| 92160A | 92160-1613 | DAMPER | | 4 | 4 | 4 | 4 | |

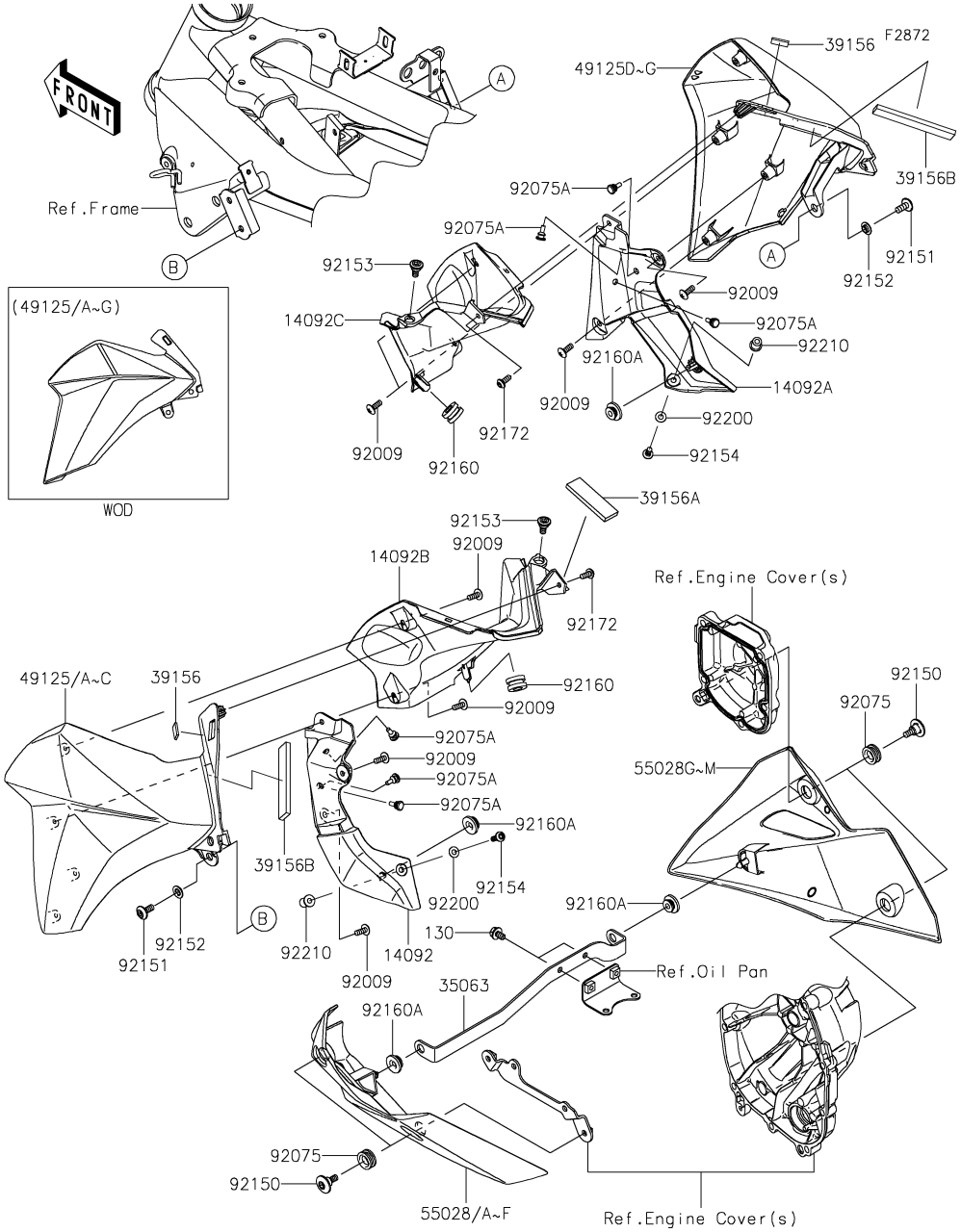


| Ref. No. | Part No. | Description | Spec Code | Quantity-ZR800 '13 ADS | '14 AEF | '15 AFF | '16 AGF | |
|---|---|---|---|---|---|---|---|---|
| 92172 | 92172-0823 | SCREW,SOCKET,5X14 | | 2 | 2 | 2 | 2 | |
| 92200 | 92200-1480 | WASHER,NYLON,5.3X11.5X0.5 | | 2 | 2 | 2 | 2 | |
| 92210 | 92210-0498 | NUT,WELL,5MM | | 2 | 2 | 2 | 2 | |
| 130 | 130BB0610 | BOLT-FLANGED,6X10 | | 2 | 2 | 2 | 2 | |

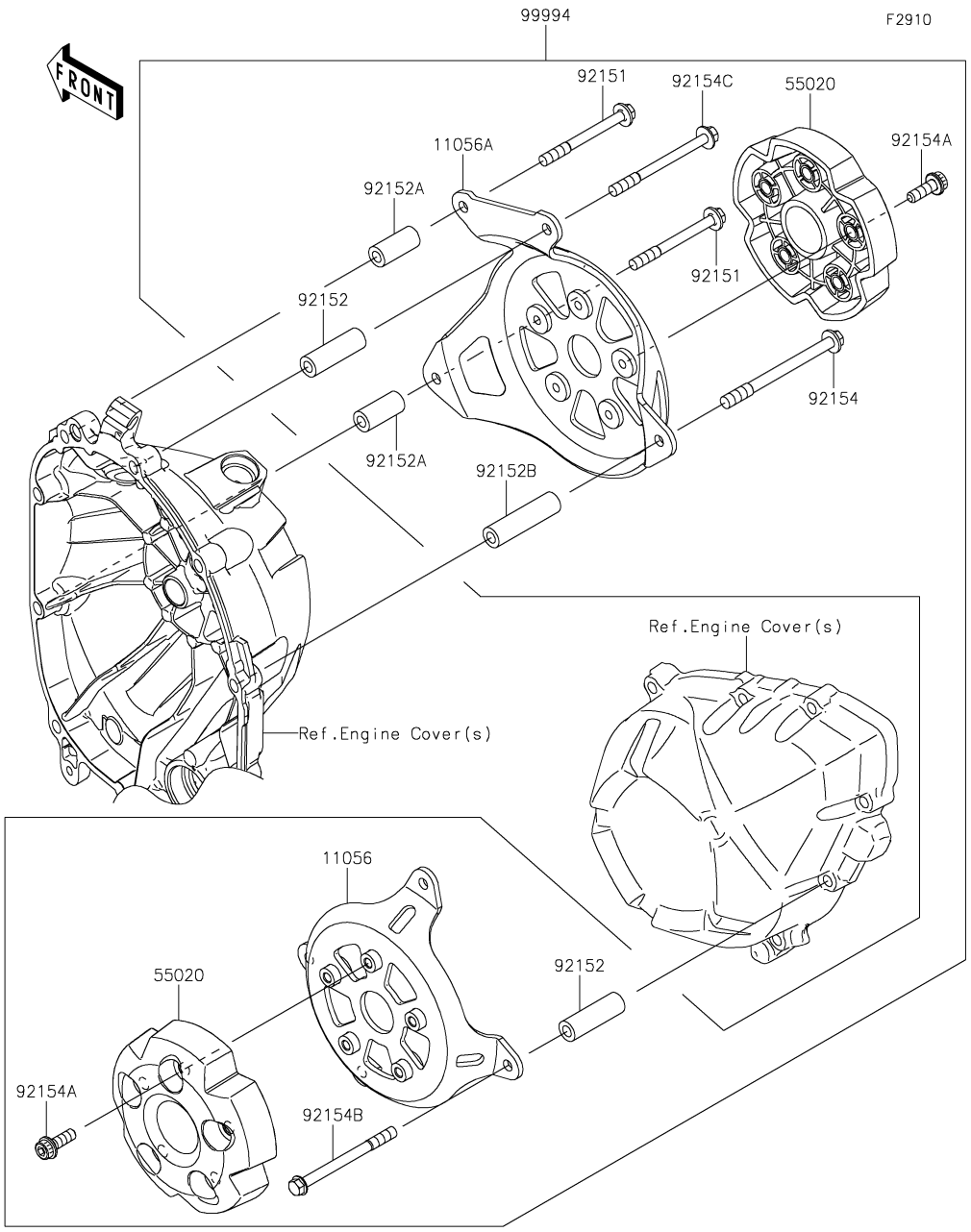


| Ref. No. | Part No. | Description | Spec Code | Quantity-ZR800 '13 ADS | '14 AEF | '15 AFF | '16 AGF | |
|---|---|---|---|---|---|---|---|---|
| 11056 | 11056-2358 | BRACKET,ENGINE GUARD,LH | | 1 | 1 | 1 | 1 | |
| 11056A | 11056-2359 | BRACKET,ENGINE GUARD,RH | | 1 | 1 | 1 | 1 | |
| 55020 | 55020-0856 | GUARD,ENGINE | | 2 | 2 | 2 | 2 | |
| 92151 | 92151-1791 | BOLT,6X60 | | 2 | 2 | 2 | 2 | |
| 92152 | 92152-1639 | COLLAR,6.5X12X37.9 | | 5 | 5 | 5 | 5 | |
| 92152A | 92152-1640 | COLLAR,6.5X12X26.8 | | 2 | 2 | 2 | 2 | |
| 92152B | 92152-1641 | COLLAR,6.5X12X46.8 | | 1 | 1 | 1 | 1 | |
| 92154 | 92154-0099 | BOLT,FLANGED,6X80 | | 1 | 1 | 1 | 1 | |
| 92154A | 92154-1036 | BOLT,SOCKET,6X18 | | 10 | 10 | 10 | 10 | |
| 92154B | 92154-1037 | BOLT,FLANGED,6X70 | | 4 | 4 | 4 | 4 | |
| 92154C | 92154-1038 | BOLT,FLANGED,6X70 | | 1 | 1 | 1 | 1 | |
| 99994 | 99994-0334 | KIT-ACCESSORY,ENGINE GUARD | | 1 | 1 | 1 | 1 | |

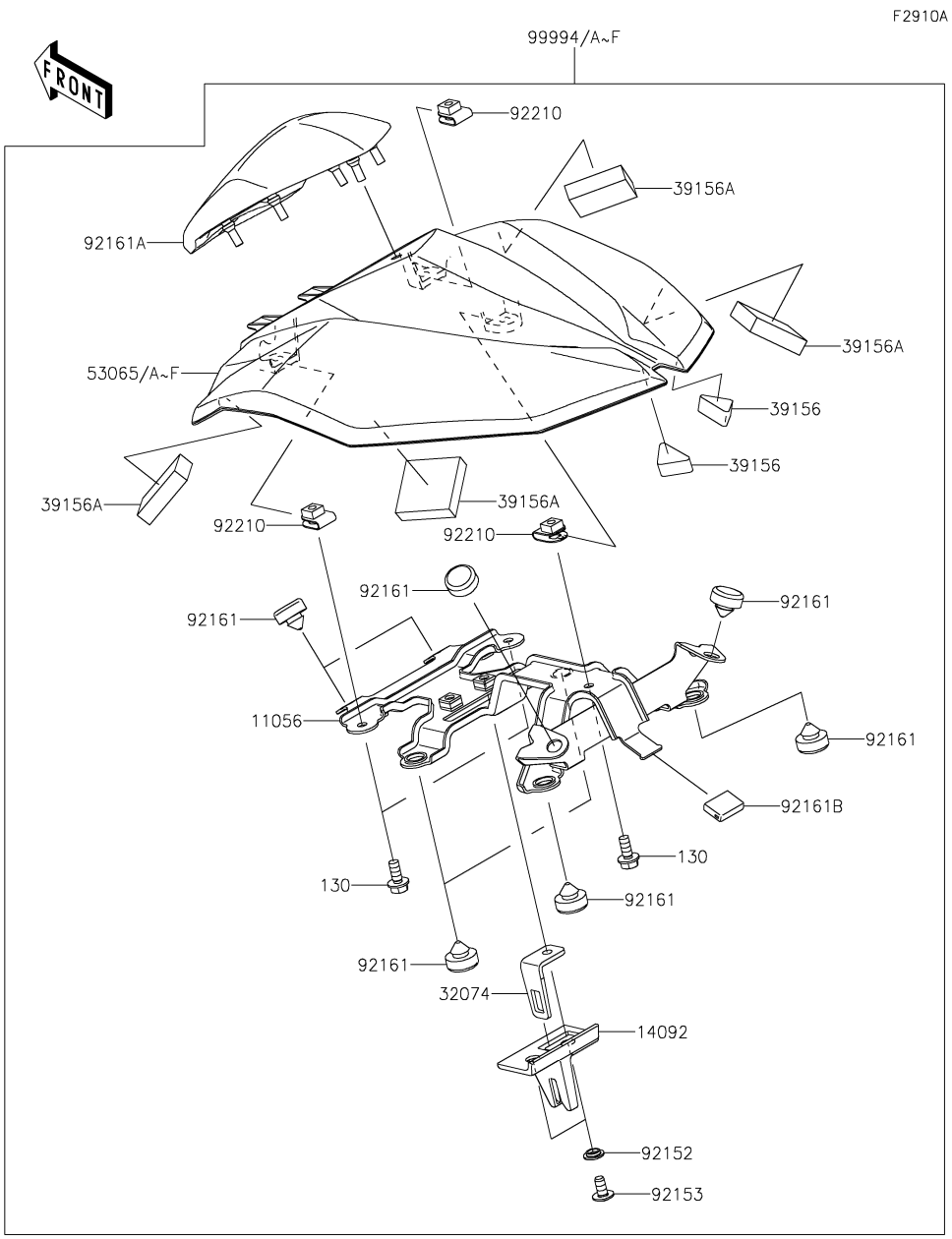


| Ref. No. | Part No. | Description | Spec Code | Quantity-ZR800 '13 ADS | '14 AEF | '15 AFF | '16 AGF | |
|---|---|---|---|---|---|---|---|---|
| 11056 | 11056-2690 | BRACKET | | 1 | 1 | 1 | 1 | |
| 14092 | 14092-0248 | COVER | | 1 | 1 | 1 | 1 | |
| 32074 | 32074-0017 | BRACKET-LOCK | | 1 | 1 | 1 | 1 | |
| 39156 | 39156-0099 | PAD | | 2 | 2 | 2 | 2 | |
| 39156A | 39156-0894 | PAD,38X38X10 | | 4 | 4 | 4 | 4 | |
| 53065 | 53065-0023-15T | COVER SEAT,C.B.ORANGE | | | 1 | | | |
| 53065A | 53065-0023-25Y | COVER SEAT,P.S.WHITE | | 1 | | | | |
| 53065B | 53065-0023-35K | COVER SEAT,C.F.B.GREEN | | | 1 | | | |
| 53065C | 53065-0023-45L | COVER SEAT,F.EBONY | | 1 | | | | |
| 53065D | 53065-0023-45Q | COVER SEAT,C.F.B.GREEN | | 1 | | | | |
| 53065E | 53065-0023-660 | COVER SEAT,M.S.BLACK | | | | 1 | 1 | |
| 53065F | 53065-0023-739 | COVER SEAT,M.F.S.BLACK | | | 1 | | | |
| 92152 | 92152-0250 | COLLAR | | 2 | 2 | 2 | 2 | |
| 92153 | 92153-1617 | BOLT,SOCKET,6X12 | | 2 | 2 | 2 | 2 | |
| 92161 | 92161-0855 | DAMPER,10X20X8 | | 8 | 8 | 8 | 8 | |
| 92161A | 92161-1460 | DAMPER,CUSHION | | 1 | 1 | 1 | 1 | |
| 92161B | 92161-1472 | DAMPER | | 1 | 1 | 1 | 1 | |
| 92210 | 92210-0277 | NUT,6MM | | 3 | 3 | 3 | 3 | |
| 99994 | 99994-0410-15T | KIT,SINGLE SEAT,C.B.ORANGE | | | 1 | | | |
| 99994A | 99994-0410-25Y | KIT,SINGLE SEAT,P.S.WHITE | | 1 | | | | |
| 99994B | 99994-0410-35K | KIT,SINGLE SEAT,C.F.B.GREEN | | | 1 | | | |
| 99994C | 99994-0410-45L | KIT,SINGLE SEAT,F.EBONY | | 1 | | | | |
| 99994D | 99994-0410-45Q | KIT,SINGLE SEAT,C.F.B.GREEN | | 1 | | | | |
| 99994E | 99994-0410-660 | KIT,SINGLE SEAT,M.S.BLACK | | | | 1 | 1 | |
| 99994F | 99994-0410-739 | KIT,SINGLE SEAT,M.F.S.BLACK | | | 1 | | | |
| 130 | 130BA0614 | BOLT-FLANGED,6X14 | | 3 | 3 | 3 | 3 | |

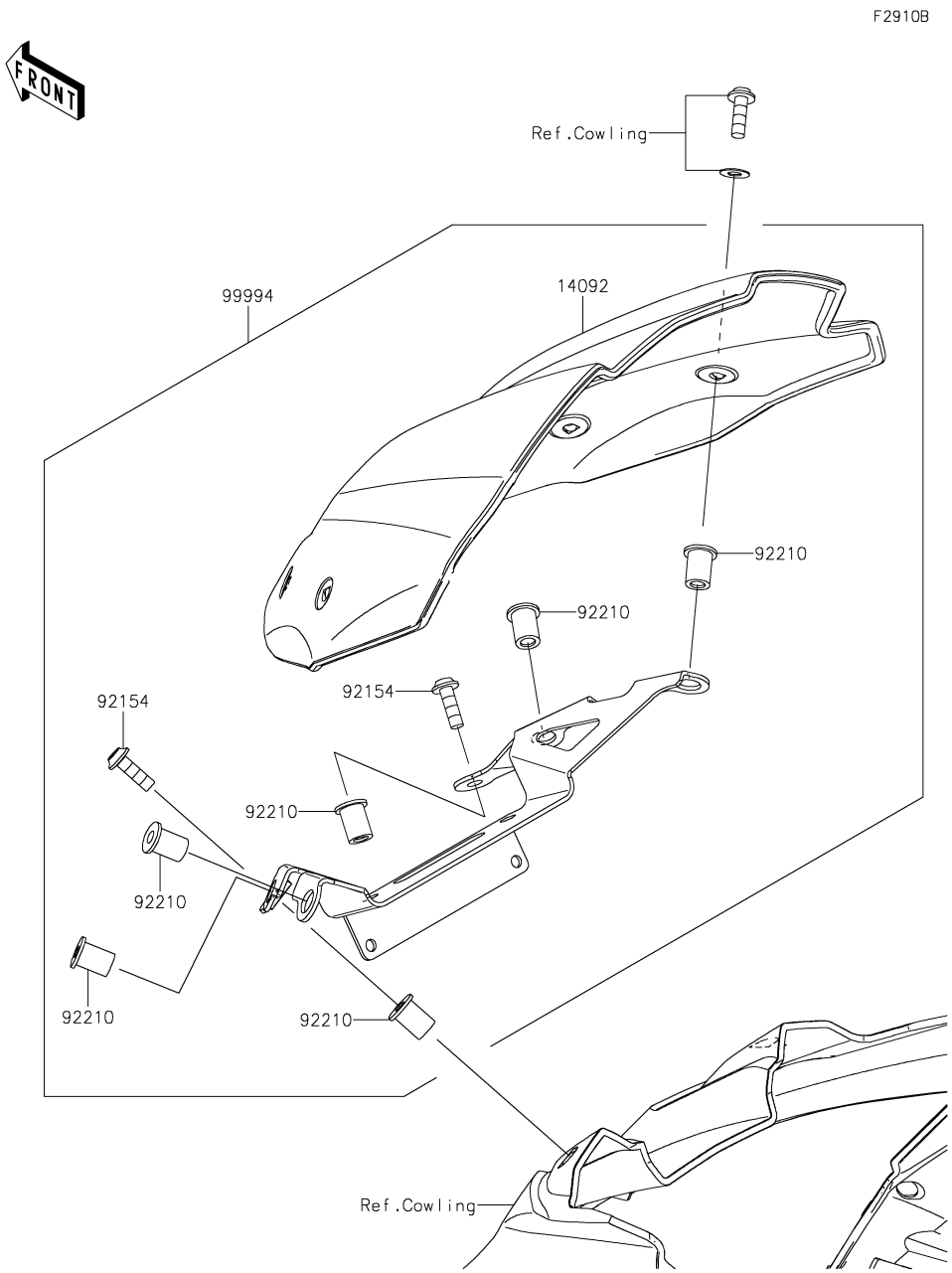


| Ref. No. | Part No. | Description | Spec Code | Quantity-ZR800 | | | | |
|---|---|---|---|---|---|---|---|---|
| | | | | '13 | '14 | '15 | '16 | |
| | | | | ADS | AEF | AFF | AGF | |
| 14092 | 14092-0987 | COVER,METER | | 1 | 1 | 1 | 1 | |
| 92154 | 92154-0026 | BOLT,SOCKET,5X16 | | 2 | 2 | 2 | 2 | |
| 92210 | 92210-0498 | NUT,WELL,5MM | | 6 | 6 | 6 | 6 | |
| 99994 | 99994-0337 | KIT-ACCESSORY,METER COVER | | 1 | 1 | 1 | 1 | |

F2920

Owner's Manual
(Local Procurement)

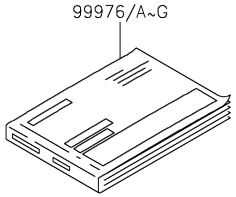


| Ref.No. | Language |
|---|---|
| (99976/B/D/F) | English |
| | French |
| | German |
| (99976A/C/E/G) | Italian |
| | Spanish |
| | Dutch |

Service Manual

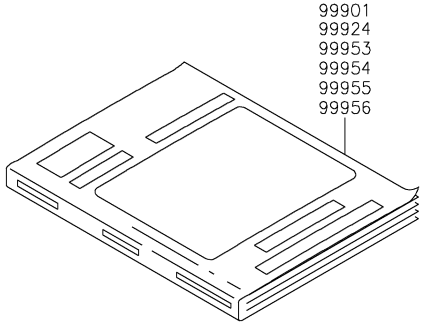


| Ref.No. | Language |
|---|---|
| (99901) | Dutch |
| (99924) | English |
| (99953) | German |
| (99954) | French |
| (99955) | Italian |
| (99956) | Spanish |

| Ref. No. | Part No. | Description | Spec Code | Quantity-ZR800 '13 ADS | '14 AEF | '15 AFF | '16 AGF | |
|---|---|---|---|---|---|---|---|---|
| 99901 | 99901-0039-03 | SERVICE MANUAL,DUTCH | | 1 | 1 | 1 | 1 | |
| 99924 | 99924-1463-03 | SERVICE MANUAL,ENGLISH | | 1 | 1 | 1 | 1 | |
| 99953 | 99953-1079-03 | SERVICE MANUAL,GERMAN | | 1 | 1 | 1 | 1 | |
| 99954 | 99954-1093-03 | SERVICE MANUAL,FRENCH | | 1 | 1 | 1 | 1 | |
| 99955 | 99955-1066-03 | SERVICE MANUAL,ITALIAN | | 1 | 1 | 1 | 1 | |
| 99956 | 99956-1054-03 | SERVICE MANUAL,SPANISH | | 1 | 1 | 1 | 1 | |
| 99976 | 99976-1736 | OWNER'S MANUAL,EN/FR/DE | | 1 | | | | |
| 99976A | 99976-1737 | OWNER'S MANUAL,IT/ES/NL | | 1 | | | | |
| 99976B | 99976-1827 | OWNER'S MANUAL,EN/FR/DE | | | 1 | | | |
| 99976C | 99976-1828 | OWNER'S MANUAL,IT/ES/NL | | | 1 | | | |
| 99976D | 99976-1871 | OWNER'S MANUAL,EN/FR/DE | | | | 1 | | |
| 99976E | 99976-1872 | OWNER'S MANUAL,IT/ES/NL | | | | 1 | | |
| 99976F | 99976-1969 | OWNER'S MANUAL,EN/FR/DE | | | | | 1 | |
| 99976G | 99976-1970 | OWNER'S MANUAL,IT/ES/NL | | | | | 1 | |

| Part No. | Grid No. |
|---|---|
| 11004-0727 | B-3 |
| 11005-0622 | B-5 |
| 11008-0755 | B-3 |
| 11009-1145 | D-3 |
| 11010-0775 | B-6 |
| 11012-1084 | D-3 |
| 11013-0044 | B-6 |
| 11054-0646 | C-14 |
| 11054-1892 | C-9 |
| 11056-0238 | G-13 |
| 11056-1540 | G-10 |
| 11056-1755 | C-5 |
| 11056-1756 | C-6 |
| 11056-1757 | C-11 |
| 11056-1800 | D-3 |
| 11056-1801 | G-9 |
| 11056-1904 | F-6 |
| 11056-2049 | C-13 |
| 11056-2119 | G-13 |
| 11056-2358 | I-7 |
| 11056-2359 | I-7 |
| 11056-2385 | C-5 |
| 11056-2394 | G-13 |
| 11056-2690 | I-8 |
| 11060-1676 | B-13 |
| 11061-0029 | F-5 |
| 11061-0104 | B-4 |
| 11061-0107 | C-10 |
| 11061-0417 | C-6 |
| 11061-0425 | B-4 |
| 11061-0787 | C-5 |
| 11061-0788 | C-5 |
| 11061-0789 | C-6 |
| 11061-0797 | F-11 |
| 11061-0797 | F-13 |
| 11061-0797 | G-3 |
| 11061-0800 | B-7 |
| 11061-0823 | B-7 |
| 11061-1168 | B-5 |
| 11065-0072 | C-7 |
| 11065-0750-18R | E-7 |
| 11065-0774 | G-6 |
| 11065-0781-10B | F-9 |
| 11065-0781-48W | F-9 |
| 11065-0781-50Y | F-9 |
| 11065-0781-56N | F-9 |
| 11065-0782-10B | F-9 |
| 11065-0782-48W | F-9 |
| 11065-0782-50Y | F-9 |
| 11065-0782-56N | F-9 |
| 11065-1247 | B-4 |
| 112BB0630 | F-8 |
| 12004-0718 | B-8 |
| 12005-0748 | B-8 |
| 12009-0001 | B-8 |
| 12011-1052 | B-8 |
| 12021-0708 | B-4 |
| 12032-0018 | B-8 |
| 12048-0035 | B-9 |
| 12053-1399 | B-9 |
| 12053-1478 | B-9 |
| 120CA0525 | C-9 |
| 120CA0608 | B-6 |
| 120CA0612 | E-6 |
| 120CA0612 | G-5 |
| 120CB0510 | C-13 |
| 120CB0612 | G-13 |
| 120CB0620 | F-8 |
| 120CB0622 | F-4 |
| 120CC0830 | F-8 |
| 13001-0731 | B-5 |
| 13002-0022 | B-5 |
| 13008-0557 | B-5 |
| 13031-0763 | B-10 |
| 13042-1005 | F-8 |
| 13070-0714 | F-7 |
| 13087-0006 | B-11 |
| 13088-1124 | B-11 |
| 13089-013 | B-11 |
| 13089-1073 | B-11 |
| 13089-1126 | B-11 |
| 13091-1624 | F-8 |
| 13091-1884 | C-13 |
| 13095-0070 | B-11 |
| 130BA0512 | C-12 |
| 130BA0614 | F-12 |
| 130BA0614 | F-14 |
| 130BA0614 | G-4 |
| 130BA0614 | I-8 |
| 130BA0618 | E-10 |
| 130BA0622 | E-10 |
| 130BA0630 | F-12 |
| 130BA0630 | F-14 |
| 130BA0630 | G-4 |
| 130BB0610 | I-4 |
| 130BB0610 | I-6 |
| 130BB0612 | G-9 |
| 130BB0614 | C-11 |
| 130BB0816 | E-4 |
| 130BD0610 | B-5 |
| 130CA0612 | C-5 |
| 130CA0645 | B-3 |
| 130CB0618 | E-4 |
| 130CB0835 | E-4 |
| 130CC0610 | C-13 |
| 130CC0616 | C-14 |
| 130CC0616 | C-3 |
| 13102-0043 | B-11 |
| 13107-0046 | C-10 |
| 13107-0157 | B-9 |
| 13107-0744 | C-13 |
| 13107-0745 | B-9 |
| 13127-0651 | B-12 |
| 13128-0005 | B-12 |
| 13140-0624 | B-13 |
| 13140-1266 | B-13 |
| 13144-0558 | B-12 |
| 13145-0557 | B-13 |
| 13151-0559 | B-13 |
| 13159-0009 | F-6 |
| 13161-0561 | B-14 |
| 13187-0003 | B-11 |
| 13194-1096 | C-13 |
| 13216-0872 | C-10 |
| 13236-0106 | B-14 |
| 13236-0140 | F-4 |
| 13236-0732 | B-14 |
| 13239-0563 | B-13 |
| 13242-0090 | B-14 |
| 13251-1145-II | B-10 |
| 13262-0065 | B-12 |
| 13262-0069 | B-12 |
| 13262-0070 | B-12 |
| 13262-0162 | B-12 |
| 13262-0551 | B-12 |
| 13262-0733 | B-12 |
| 13262-0734 | B-12 |
| 13262-0938 | B-12 |
| 13262-0939 | B-12 |
| 13262-0952 | B-12 |
| 13272-0573 | F-4 |
| 13272-1254 | C-3 |
| 13272-1255 | C-3 |
| 13272-1376 | C-7 |
| 13280-0017 | F-8 |
| 13280-0711 | C-10 |
| 132BA0512 | E-4 |
| 132BA0612 | C-10 |
| 132BA0612 | E-10 |
| 132BA0614 | G-10 |
| 14001-0616 | C-3 |
| 14013-1051 | C-3 |
| 14014-0563 | C-3 |
| 14026-0102 | C-5 |
| 14031-0564 | C-5 |
| 14031-0602 | C-5 |
| 14032-0586 | C-5 |
| 14032-0620 | C-5 |
| 14069-0008 | F-11 |
| 14069-0008 | F-13 |
| 14069-0008 | G-3 |
| 14073-0738 | B-6 |
| 14073-0746 | B-6 |
| 14073-0748 | B-6 |
| 14073-0749 | B-6 |
| 14075-0001 | D-3 |
| 14079-0009 | C-13 |
| 14092-0001 | G-10 |
| 14092-0109 | C-13 |
| 14092-0248 | I-8 |
| 14092-0949 | B-7 |
| 14092-0950 | C-5 |
| 14092-0952 | C-7 |
| 14092-0953 | C-7 |
| 14092-0962-15T | E-5 |
| 14092-0962-25Y | E-5 |
| 14092-0962-35K | E-5 |
| 14092-0962-45L | E-5 |
| 14092-0962-45Q | E-5 |
| 14092-0962-660 | E-5 |
| 14092-0963-15T | E-5 |
| 14092-0963-25Y | E-5 |
| 14092-0963-35K | E-5 |
| 14092-0963-45L | E-5 |
| 14092-0963-45Q | E-5 |
| 14092-0963-660 | E-5 |
| 14092-0964 | I-4 |
| 14092-0965 | I-5 |
| 14092-0966 | I-5 |
| 14092-0967 | I-5 |
| 14092-0968 | I-5 |
| 14092-0972 | B-4 |
| 14092-0987 | I-9 |
| 14092-0996 | E-10 |
| 14092-1055 | E-5 |
| 14092-1090 | F-11 |
| 14092-1090 | F-13 |
| 14092-1090 | G-3 |
| 14092-1091 | F-11 |
| 14092-1091 | F-13 |
| 14092-1091 | G-3 |
| 14092-1092 | F-11 |
| 14092-1092 | F-13 |
| 14092-1092 | G-3 |
| 14092-1093-18T | E-5 |
| 14092-1094-18T | E-5 |
| 14093-0377 | B-4 |
| 14093-0378 | C-5 |
| 16007-1227 | B-8 |
| 16014-0017 | C-7 |
| 16021-0029 | C-7 |
| 16065-0121 | B-3 |
| 16073-1123 | C-7 |
| 16085-1303 | C-13 |
| 16097-0008 | C-10 |
| 16115-1053 | C-5 |
| 16126-1140 | E-12 |
| 16126-1437 | B-6 |
| 16130-1058 | C-10 |
| 16142-0063 | C-10 |
| 16142-1146 | C-10 |
| 16154-0057 | C-10 |
| 16160-0725 | D-3 |
| 16160-0727 | C-10 |
| 16163-0798 | C-7 |
| 16163-0800 | C-7 |
| 18091-0908 | B-7 |
| 180BA0614 | F-3 |
| 18110-0157 | B-7 |
| 21003-0133 | C-11 |
| 21007-0081 | C-12 |
| 21007-0576 | C-11 |
| 21007-5072 | G-13 |
| 21040-0001 | C-13 |
| 21066-0720 | C-11 |
| 21163-0729 | C-13 |
| 21169-1058 | C-13 |
| 21171-0033 | C-12 |
| 21174-0008 | B-7 |
| 21175-0789 | C-9 |
| 21175-0791 | C-9 |
| 21176-0009 | C-9 |
| 21176-0026 | C-9 |
| 21176-0054 | C-3 |
| 21176-0111 | C-9 |
| 21176-0749 | C-9 |
| 21176-2106 | C-9 |
| 21181-0056 | G-13 |
| 220AA0514 | D-3 |
| 220AB0525 | F-8 |
| 220AB0540 | F-8 |
| 224AB0408 | G-11 |
| 225AB0412 | F-6 |
| 23007-0180 | G-9 |
| 23007-0193 | G-9 |
| 23008-0152 | G-9 |
| 23016-0561 | G-10 |
| 23017-0004 | G-9 |
| 23025-0344 | G-10 |
| 23026-0015 | G-10 |
| 23026-0023 | G-10 |
| 23037-0204 | G-11 |
| 23037-0205 | G-11 |
| 23037-0247 | G-11 |
| 23037-0248 | G-11 |
| 23037-0304 | G-11 |
| 23037-0305 | G-11 |
| 23037-0310 | G-11 |
| 23037-0311 | G-11 |
| 23048-0014 | G-11 |
| 23048-0015 | G-11 |
| 23048-0025 | G-11 |
| 23048-0026 | G-11 |
| 23062-0776 | E-4 |
| 236AB0410 | F-8 |
| 25023-0085 | G-6 |
| 25031-0428 | G-6 |
| 26006-0001 | C-13 |
| 26006-0001 | G-12 |
| 26006-0055 | G-12 |
| 26006-1080 | C-13 |
| 26006-1080 | G-12 |
| 26011-0760 | C-13 |
| 26011-0764 | G-12 |
| 26011-0810 | G-12 |
| 26012-0608 | G-12 |
| 26012-0730 | G-12 |
| 26031-1531 | G-12 |
| 27002-0007 | G-12 |
| 27002-1097 | G-12 |
| 27003-0094 | G-12 |
| 27005-0581 | G-13 |
| 27008-0558 | G-13 |
| 27010-0025 | F-4 |
| 27010-0113 | C-13 |
| 27010-0722 | G-13 |
| 27010-0723 | G-13 |
| 27010-0729 | F-8 |
| 27010-1313 | C-3 |
| 27012-0170 | F-11 |

| Part No. | Grid No. |
|---|---|
| 27012-0170 | F-13 |
| 27012-0170 | G-3 |
| 27012-0746 | F-11 |
| 27012-0746 | F-13 |
| 27012-0746 | G-3 |
| 27012-0772 | F-11 |
| 27012-0772 | F-13 |
| 27012-0772 | G-3 |
| 27016-0008 | G-13 |
| 27016-5380 | G-13 |
| 27045-5484 | G-13 |
| 28011-0578 | G-6 |
| 28012-1077 | G-13 |
| 31064-0625 | C-7 |
| 32046-0335 | G-5 |
| 32052-0723 | E-5 |
| 32074-0017 | I-8 |
| 32085-0047 | E-9 |
| 32154-1493 | C-3 |
| 32160-0678-18R | E-3 |
| 32190-0603 | E-4 |
| 32190-0619-18R | E-4 |
| 32190-0620-18R | E-4 |
| 32190-0635-18R | E-4 |
| 32190-0636-18R | E-4 |
| 32190-0683-18R | E-4 |
| 33001-0604-18R | E-7 |
| 33032-0005 | E-7 |
| 33040-0078 | E-7 |
| 33040-0079-26M | E-7 |
| 34024-0116-18R | E-11 |
| 34028-0092 | E-9 |
| 34028-0093 | E-9 |
| 34028-0094 | E-9 |
| 34028-0095 | E-9 |
| 35004-0322-25Y | E-10 |
| 35004-0322-35K | E-10 |
| 35004-0322-45L | E-10 |
| 35004-0322-660 | E-10 |
| 35004-0322-739 | E-10 |
| 35019-0556 | E-10 |
| 35023-0343 | E-10 |
| 35023-0375 | E-10 |
| 35034-0580 | E-10 |
| 35063-0855 | C-14 |
| 35063-0863-18R | E-5 |
| 35063-0864-18R | E-5 |
| 35063-0865 | G-9 |
| 35063-0866 | G-9 |
| 35063-0867 | I-4 |
| 35063-0868 | I-5 |
| 36001-0596 | G-8 |
| 36001-0597 | G-8 |
| 36014-0025 | G-8 |
| 36040-0139-15T | G-8 |
| 36040-0139-25Y | G-8 |
| 36040-0139-35K | G-8 |
| 36040-0139-45L | G-8 |
| 36040-0139-660 | G-8 |
| 39007-0003 | E-8 |
| 39060-0034 | C-14 |
| 39062-0605 | D-3 |
| 39062-0632 | D-3 |
| 39062-0673 | D-3 |
| 39062-0674 | D-3 |
| 39062-0675 | D-3 |
| 39062-1610 | D-3 |
| 39110-0033 | B-14 |
| 39111-0017 | E-8 |
| 39156-0096 | G-12 |
| 39156-0099 | I-8 |
| 39156-0284 | E-5 |
| 39156-0284 | I-4 |
| 39156-0291 | G-12 |
| 39156-0292 | E-5 |
| 39156-0292 | G-8 |
| 39156-0389 | I-5 |
| 39156-0870 | E-5 |
| 39156-0885 | B-7 |
| 39156-0886 | B-7 |
| 39156-0887 | B-7 |
| 39156-0894 | I-8 |
| 39156-0946 | B-7 |
| 39156-0948 | G-12 |
| 39156-0950 | E-10 |
| 39156-0950 | I-5 |
| 39156-0951 | E-5 |
| 39156-0952 | E-5 |
| 39156-0953 | E-5 |
| 39156-0960 | E-5 |
| 39156-0961 | E-5 |
| 39156-0964 | I-4 |
| 39156-0965 | I-4 |
| 39156-0966 | I-4 |
| 39156-0967 | E-5 |
| 39156-0970 | G-8 |
| 39156-0971 | G-8 |
| 39156-0972 | G-8 |
| 39156-0975 | I-5 |
| 39156-0988 | G-12 |
| 39156-0992 | C-5 |
| 39156-0995 | F-11 |
| 39156-0995 | F-13 |
| 39156-0995 | G-3 |
| 39156-0999 | F-11 |
| 39156-0999 | F-13 |
| 39156-0999 | G-3 |
| 39156-1723 | G-8 |
| 39156-1724 | G-8 |
| 39156-1725 | G-8 |
| 39156-1764 | G-8 |
| 39156-1858 | F-13 |
| 39156-1858 | G-3 |
| 39156-1949 | E-5 |
| 39178-0191 | B-7 |
| 39178-0225 | B-7 |
| 39188-0558 | E-5 |
| 39188-0559 | G-8 |
| 39192-0073 | D-3 |
| 39192-0566 | D-3 |
| 39192-0568 | D-3 |
| 39193-0014 | C-3 |
| 41009-0525 | E-12 |
| 41009-0526 | E-12 |
| 41068-0038 | E-13 |
| 41068-0579 | E-14 |
| 41073-0593-QT | E-14 |
| 41073-0595-QT | E-13 |
| 41075-0007 | E-12 |
| 41075-0008 | E-12 |
| 41075-0009 | E-12 |
| 41080-0576 | F-7 |
| 41080-0577-5C | F-5 |
| 410AA0600 | E-9 |
| 410AB0600 | F-8 |
| 42033-0043 | E-14 |
| 42036-0050 | F-7 |
| 42036-0717 | E-8 |
| 42036-0718 | E-8 |
| 42036-1251 | E-14 |
| 42036-1264 | E-7 |
| 42036-1360 | E-8 |
| 42041-0119 | E-14 |
| 42045-018 | E-14 |
| 43001-0716 | F-3 |
| 43010-0009 | F-6 |
| 43015-0574 | F-6 |
| 43015-0588 | F-4 |
| 43020-0008 | F-4 |
| 43020-1094 | F-6 |
| 43022-1010 | F-4 |
| 43026-0009 | F-6 |
| 43026-0019 | F-4 |
| 43027-0008 | F-4 |
| 43027-1053 | F-6 |
| 43028-0015 | F-4 |
| 43028-1065 | F-6 |
| 43034-0049 | F-4 |
| 43044-0071 | F-7 |
| 43045-1053 | F-5 |
| 43048-0001 | F-5 |
| 43048-0008 | F-7 |
| 43048-0021 | F-5 |
| 43049-0006 | F-5 |
| 43049-0007 | F-5 |
| 43049-0030 | F-5 |
| 43049-0031 | F-5 |
| 43056-1055 | F-5 |
| 43056-1055 | F-7 |
| 43057-1001 | F-5 |
| 43057-1001 | F-7 |
| 43058-1100 | F-5 |
| 43078-0060 | F-6 |
| 43078-0559 | D-3 |
| 43080-0050-DJ | F-7 |
| 43080-0130-DJ | F-5 |
| 43080-0131-DJ | F-5 |
| 43082-0117 | F-7 |
| 43082-0129 | F-5 |
| 43095-0585 | F-6 |
| 43095-0708 | F-4 |
| 43095-0709 | F-4 |
| 43095-0710 | F-6 |
| 44008-0062-499 | F-9 |
| 44008-0062-56N | F-9 |
| 44013-0195-18R | F-9 |
| 44013-0196-18R | F-9 |
| 44023-0107 | F-9 |
| 44023-0112 | F-9 |
| 44023-0124 | F-9 |
| 44026-0171 | F-9 |
| 44026-0193 | F-9 |
| 44029-0015 | F-9 |
| 44037-0066-26M | F-9 |
| 44039-0130-26M | F-9 |
| 44065-0042 | F-9 |
| 44065-1114 | F-9 |
| 44071-0850-48C | F-9 |
| 44071-0895-48C | F-9 |
| 44071-1103-50M | F-9 |
| 44071-1103-56Q | F-9 |
| 44071-1103-56R | F-9 |
| 44071-1104-50M | F-9 |
| 44071-1104-56Q | F-9 |
| 44071-1104-56R | F-9 |
| 45014-0386-37K | E-8 |
| 45014-0386-37N | E-8 |
| 45014-0386-37Z | E-8 |
| 45014-0386-52E | E-8 |
| 46003-0583-18R | F-8 |
| 46012-0314 | F-8 |
| 46012-0315 | F-8 |
| 46019-0060 | F-8 |
| 46075-0564 | F-8 |
| 46076-0080 | F-8 |
| 46076-0102 | F-8 |
| 46091-0248 | F-8 |
| 46091-0257 | F-8 |
| 46092-0003 | F-8 |
| 46102-0567 | B-11 |
| 461DB0500 | C-13 |
| 480J1100 | C-10 |
| 482EA0100 | E-9 |
| 482J0200 | B-14 |
| 49002-1152 | B-3 |
| 49006-0058 | F-7 |
| 49006-0573 | G-12 |
| 49006-1242 | F-7 |
| 49016-0032 | C-14 |
| 49016-0591 | G-9 |
| 49016-0600 | D-3 |
| 49016-1044 | F-4 |
| 49033-0029 | C-7 |
| 49034-0554 | C-6 |
| 49040-0724 | C-8 |
| 49047-0010 | B-13 |
| 49054-0004 | D-3 |
| 49056-0037 | C-7 |
| 49063-1055 | C-10 |
| 49065-0712 | C-10 |
| 49078-0023 | B-8 |
| 49085-1066 | D-3 |
| 49091-0001 | F-4 |
| 49091-0001 | F-6 |
| 49118-0760 | B-9 |
| 49118-0761 | B-9 |
| 49125-0584-25Y | I-5 |
| 49125-0584-45L | I-5 |
| 49125-0584-660 | I-5 |
| 49125-0584-739 | I-5 |
| 49125-0585-25Y | I-5 |
| 49125-0585-45L | I-5 |
| 49125-0585-660 | I-5 |
| 49125-0585-739 | I-5 |
| 51001-0782-25Y | G-3 |
| 51001-0782-45L | G-3 |
| 51001-0782-53R | G-3 |
| 51026-0053-25Y | F-13 |
| 51026-0053-35L | F-11 |
| 51026-0053-45L | F-13 |
| 51026-0053-660 | F-11 |
| 51026-0053-660 | F-13 |
| 51026-0053-660 | G-3 |
| 51026-0053-739 | F-11 |
| 51026-0054-25Y | F-13 |
| 51026-0054-35L | F-11 |
| 51026-0054-45L | F-13 |
| 51026-0054-660 | F-11 |
| 51026-0054-660 | F-13 |
| 51026-0054-660 | G-3 |
| 51026-0054-739 | F-11 |
| 51044-0740 | C-8 |
| 51049-0714 | F-11 |
| 51049-0714 | F-13 |
| 51049-0714 | G-3 |
| 51088-5004-15S | F-11 |
| 51088-5005-35K | F-11 |
| 51088-5012-15Z | F-11 |
| 51088-5254-15T | F-11 |
| 51088-5256-660 | F-11 |
| 51088-5259-35K | F-11 |
| 51089-5179-660 | F-13 |
| 51089-5180-35K | F-13 |
| 51089-5187-35B | F-13 |
| 52005-0721 | F-11 |
| 52005-0721 | F-13 |
| 52005-0721 | G-3 |
| 52005-1120 | C-5 |
| 53003-0332-MA | G-5 |
| 53003-0333-41C | G-5 |
| 53003-0333-MA | G-5 |
| 53003-0423-41C | G-5 |
| 53003-0423-55F | G-5 |
| 53003-0423-MA | G-5 |
| 53044-0001 | E-5 |
| 53044-0018 | E-5 |
| 53044-0564 | E-10 |
| 53044-0567 | G-12 |
| 53044-0568 | G-12 |
| 53044-1249 | E-5 |

| Part No. | Grid No. |
|---|---|
| 53065-0023-15T | I-8 |
| 53065-0023-25Y | I-8 |
| 53065-0023-35K | I-8 |
| 53065-0023-45L | I-8 |
| 53065-0023-45Q | I-8 |
| 53065-0023-660 | I-8 |
| 53065-0023-739 | I-8 |
| 53066-0360-12Y | G-5 |
| 53066-0360-41D | G-5 |
| 53066-0404-MA | G-5 |
| 53066-0466-MA | G-5 |
| 53066-0467-12Y | G-5 |
| 53066-0467-41D | G-5 |
| 53066-0467-55K | G-5 |
| 54010-0586 | B-7 |
| 54010-0587 | B-7 |
| 54010-0588 | G-7 |
| 54011-0563 | G-7 |
| 54011-0599 | G-7 |
| 54012-0582 | G-7 |
| 54012-0583 | G-7 |
| 55020-0061 | E-7 |
| 55020-0838 | B-7 |
| 55020-0842 | E-5 |
| 55020-0843 | E-5 |
| 55020-0856 | I-7 |
| 55020-0869 | G-12 |
| 55020-0870 | G-12 |
| 55028-0428-15T | I-4 |
| 55028-0428-25Y | I-4 |
| 55028-0428-35B | I-4 |
| 55028-0428-35K | I-4 |
| 55028-0428-45L | I-4 |
| 55028-0428-45Q | I-4 |
| 55028-0428-660 | I-4 |
| 55028-0428-739 | I-4 |
| 55028-0429 | I-4 |
| 55028-0430 | I-4 |
| 55028-0431-25Y | I-4 |
| 55028-0431-35L | I-4 |
| 55028-0431-45L | I-4 |
| 55028-0431-660 | I-4 |
| 55028-0431-739 | I-4 |
| 55028-0432-25Y | I-4 |
| 55028-0432-35L | I-4 |
| 55028-0432-45L | I-4 |
| 55028-0432-660 | I-4 |
| 55028-0432-739 | I-4 |
| 55028-0433-15T | I-5 |
| 55028-0433-25Y | I-5 |
| 55028-0433-35K | I-5 |
| 55028-0433-45L | I-5 |
| 55028-0433-45Q | I-5 |
| 55028-0433-45W | I-5 |
| 55028-0433-660 | I-5 |
| 55028-0434-15T | I-5 |
| 55028-0434-25Y | I-5 |
| 55028-0434-35K | I-5 |
| 55028-0434-45L | I-5 |
| 55028-0434-45Q | I-5 |
| 55028-0434-45W | I-5 |
| 55028-0434-660 | I-5 |
| 550AA2015 | F-6 |
| 550AA4035 | E-14 |
| 550S2515 | E-9 |
| 551A0408 | C-10 |
| 551A0814 | C-5 |
| 56001-0243 | F-8 |
| 56001-0244 | F-8 |
| 56001-0299 | F-8 |
| 56001-0300 | F-8 |
| 56007-0108 | G-14 |
| 56008-0036 | G-14 |
| 56030-0737 | G-12 |
| 56030-0784 | G-12 |
| 56033-0742 | H-3 |
| 56033-0915 | H-3 |
| 56053-0622 | H-3 |
| 56053-1121 | H-3 |
| 56054-1120 | H-4 |
| 56054-1121 | H-10 |
| 56054-1121 | H-11 |
| 56054-1121 | H-12 |
| 56054-1121 | H-4 |
| 56054-1121 | H-5 |
| 56054-1121 | H-6 |
| 56054-1121 | H-7 |
| 56054-1121 | H-8 |
| 56054-1121 | H-9 |
| 56054-1122 | H-6 |
| 56054-1123 | H-5 |
| 56054-1133 | F-11 |
| 56054-1133 | F-13 |
| 56054-1133 | G-3 |
| 56054-1161 | H-4 |
| 56054-1161 | H-8 |
| 56054-1162 | H-12 |
| 56054-1162 | H-6 |
| 56054-1162 | H-7 |
| 56054-1163 | H-5 |
| 56054-1284 | H-7 |
| 56054-1286 | H-11 |
| 56054-1286 | H-9 |
| 56054-1287 | H-10 |
| 56054-1287 | H-9 |
| 56054-1336 | H-10 |
| 56054-1336 | H-8 |
| 56054-1584 | H-11 |
| 56054-1585 | H-12 |
| 56054-1913 | H-13 |
| 56054-1913 | I-3 |
| 56054-1914 | H-13 |
| 56054-1914 | H-14 |
| 56054-1914 | I-3 |
| 56054-1922 | H-14 |
| 56069-2397 | H-7 |
| 56069-2580 | H-4 |
| 56069-2580 | H-8 |
| 56069-2581 | H-4 |
| 56069-2581 | H-8 |
| 56069-2583 | H-6 |
| 56069-2584 | H-6 |
| 56069-2585 | H-5 |
| 56069-2586 | H-5 |
| 56069-2587 | H-5 |
| 56069-2640 | H-10 |
| 56069-2640 | H-11 |
| 56069-2640 | H-12 |
| 56069-2640 | H-14 |
| 56069-2640 | H-4 |
| 56069-2640 | H-6 |
| 56069-2640 | H-8 |
| 56069-2640 | H-9 |
| 56069-2640 | I-3 |
| 56069-4110 | H-7 |
| 56069-4111 | H-7 |
| 56069-4112 | H-9 |
| 56069-4113 | H-9 |
| 56069-7726 | H-10 |
| 56069-7727 | H-10 |
| 56069-7728 | H-11 |
| 56069-7729 | H-11 |
| 56069-7730 | H-12 |
| 56069-7731 | H-12 |
| 56071-0368 | H-3 |
| 56075-1188 | H-13 |
| 56075-1189 | H-13 |
| 56075-1190 | H-13 |
| 56075-1191 | H-13 |
| 56075-1192 | H-13 |
| 56075-1193 | H-13 |
| 56075-1194 | H-13 |
| 56075-1195 | H-13 |
| 56075-1196 | H-13 |
| 56075-1197 | H-14 |
| 56075-1198 | H-14 |
| 56075-1199 | H-14 |
| 56075-1200 | H-14 |
| 56075-1201 | H-14 |
| 56075-1202 | H-14 |
| 56075-1203 | H-14 |
| 56075-1204 | H-14 |
| 56075-1205 | I-3 |
| 56075-1206 | I-3 |
| 56075-1207 | I-3 |
| 56075-1208 | I-3 |
| 56075-1209 | I-3 |
| 56075-1210 | I-3 |
| 56075-1211 | I-3 |
| 56075-1212 | I-3 |
| 57001-1752 | H-10 |
| 57001-1752 | H-11 |
| 57001-1752 | H-12 |
| 57001-1752 | H-13 |
| 57001-1752 | H-14 |
| 57001-1752 | H-4 |
| 57001-1752 | H-5 |
| 57001-1752 | H-6 |
| 57001-1752 | H-7 |
| 57001-1752 | H-8 |
| 57001-1752 | H-9 |
| 57001-1752 | I-3 |
| 59026-0555 | C-12 |
| 59051-0714 | C-13 |
| 59091-0007 | B-7 |
| 59256-0555 | C-10 |
| 59502-0577 | C-14 |
| 600A0500 | B-12 |
| 601B6004UU | E-13 |
| 601B6204UU | E-14 |
| 601B6205UU | E-14 |
| 610A0406 | B-13 |
| 670B2020 | C-5 |
| 670B5075 | E-6 |
| 670D1505 | C-3 |
| 670D1509 | B-9 |
| 670D2014 | B-9 |
| 670E5075 | C-8 |
| 671B2560 | E-14 |
| 92002-1143 | B-3 |
| 92002-1183 | E-8 |
| 92002-1322 | F-4 |
| 92002-1323 | F-4 |
| 92002-1337 | E-4 |
| 92002-1756 | B-3 |
| 92002-1796 | C-5 |
| 92004-0028 | E-14 |
| 92004-0050 | B-3 |
| 92005-0713 | C-3 |
| 92005-0744 | D-3 |
| 92005-1380 | C-7 |
| 92009-1138 | I-4 |
| 92009-1197 | I-5 |
| 92009-1257 | F-8 |
| 92009-1391 | G-6 |
| 92015-1180 | E-4 |
| 92015-1311 | B-10 |
| 92015-1487 | C-14 |
| 92015-1528 | F-4 |
| 92015-1555 | B-11 |
| 92015-1717 | E-11 |
| 92015-1724 | E-7 |
| 92015-1795 | F-10 |
| 92015-1962 | F-8 |
| 92015-1963 | B-12 |
| 92022-077 | C-10 |
| 92022-1028 | E-4 |
| 92022-1088 | F-8 |
| 92022-1109 | B-12 |
| 92022-112 | B-12 |
| 92022-1282 | F-3 |
| 92022-1298 | F-10 |
| 92022-1521 | F-11 |
| 92022-1521 | F-13 |
| 92022-1521 | G-3 |
| 92022-1521 | G-8 |
| 92022-1565 | D-3 |
| 92022-1582 | E-7 |
| 92022-1628 | B-14 |
| 92022-1868 | B-11 |
| 92022-2200 | C-13 |
| 92022-228 | F-11 |
| 92022-228 | F-13 |
| 92022-228 | G-3 |
| 92022-289 | B-7 |
| 92022-304 | B-5 |
| 92022-326 | F-3 |
| 92026-0045 | F-10 |
| 92026-022 | B-11 |
| 92026-1497 | B-11 |
| 92027-1045 | G-13 |
| 92028-1282 | F-3 |
| 92028-1735 | B-12 |
| 92028-1739 | B-12 |
| 92028-1827 | B-10 |
| 92028-1828 | B-10 |
| 92028-1829 | B-10 |
| 92028-1866 | B-10 |
| 92028-1867 | B-10 |
| 92028-1868 | B-10 |
| 92028-1915 | B-12 |
| 92028-1968 | B-12 |
| 92033-0079 | F-6 |
| 92033-015 | B-12 |
| 92033-026 | B-12 |
| 92033-1036 | F-10 |
| 92033-1041 | E-7 |
| 92033-1043 | E-14 |
| 92033-1099 | B-5 |
| 92033-1186 | F-6 |
| 92033-1249 | B-12 |
| 92037-010 | F-11 |
| 92037-010 | F-13 |
| 92037-010 | G-3 |
| 92037-1124 | C-7 |
| 92037-1163 | E-5 |
| 92037-1460 | B-6 |
| 92037-147 | D-3 |
| 92037-1903 | G-9 |
| 92038-1060 | C-11 |
| 92039-0014 | C-14 |
| 92039-0023 | C-7 |
| 92039-0027 | C-14 |
| 92039-0709 | D-3 |
| 92039-0722 | D-3 |
| 92039-1231 | E-10 |
| 92041-1060 | F-8 |
| 92042-007 | C-5 |
| 92042-030 | C-10 |
| 92043-0104 | F-6 |
| 92043-0137 | F-7 |
| 92043-0770 | E-9 |
| 92043-1037 | C-3 |
| 92043-1262 | C-10 |
| 92043-1263 | B-3 |
| 92043-1263 | C-10 |
| 92043-1263 | C-5 |
| 92043-1520 | F-7 |
| 92043-1594 | E-9 |
| 92043-1690 | C-3 |

| Part No. | Grid No. |
|---|---|
| 92043-4009 | B-3 |
| 92043-4009 | B-4 |
| 92045-0003 | B-12 |
| 92045-0017 | E-7 |
| 92045-0742 | B-11 |
| 92045-1045 | B-13 |
| 92045-1384 | E-3 |
| 92046-0008 | E-7 |
| 92046-0034 | C-5 |
| 92046-0043 | C-3 |
| 92046-1219 | B-12 |
| 92046-1263 | B-11 |
| 92046-1272 | E-8 |
| 92046-1273 | E-8 |
| 92046-1303 | B-12 |
| 92048-0018 | C-13 |
| 92049-0022 | E-3 |
| 92049-0073 | F-10 |
| 92049-0130 | E-13 |
| 92049-0140 | E-14 |
| 92049-0778 | C-10 |
| 92049-1181 | E-7 |
| 92049-1223 | E-8 |
| 92049-1225 | E-8 |
| 92049-1287 | E-14 |
| 92049-1308 | B-8 |
| 92049-1380 | E-7 |
| 92049-1448 | F-5 |
| 92049-1449 | F-7 |
| 92049-1450 | F-7 |
| 92049-1474 | C-3 |
| 92049-1475 | C-5 |
| 92049-1483 | E-3 |
| 92049-1493 | E-8 |
| 92049-1520 | C-3 |
| 92055-0016 | C-9 |
| 92055-0114 | D-3 |
| 92055-0124 | C-7 |
| 92055-0187 | B-4 |
| 92055-0737 | B-3 |
| 92055-0738 | C-10 |
| 92055-0741 | F-6 |
| 92055-0761 | C-7 |
| 92055-0831 | D-3 |
| 92055-086 | B-9 |
| 92055-112 | D-3 |
| 92055-1260 | C-13 |
| 92055-1261 | C-13 |
| 92055-1262 | C-13 |
| 92055-1333 | F-10 |
| 92055-1343 | C-3 |
| 92055-1350 | D-3 |
| 92055-1402 | D-3 |
| 92055-1503 | C-10 |
| 92055-1570 | C-5 |
| 92055-1571 | C-10 |
| 92055-3018 | C-10 |
| 92057-0184 | E-14 |
| 92057-0602 | B-9 |
| 92058-0021 | E-14 |
| 92062-0022 | C-3 |
| 92066-0002 | B-3 |
| 92066-0003 | C-3 |
| 92066-0071 | E-3 |
| 92066-0738 | B-9 |
| 92066-0767 | C-6 |
| 92066-1110 | C-3 |
| 92066-1211 | B-6 |
| 92069-0024 | G-11 |
| 92069-0053 | G-9 |
| 92069-0058 | G-11 |
| 92069-1016 | G-10 |
| 92069-1016 | G-9 |
| 92070-1264 | C-12 |
| 92071-0713 | C-13 |
| 92071-0714 | B-6 |
| 92071-1187 | C-11 |
| 92071-1187 | F-11 |
| 92071-1187 | F-13 |
| 92071-1187 | G-3 |
| 92072-0741 | E-5 |
| 92072-1414 | G-12 |
| 92075-015 | F-11 |
| 92075-015 | F-13 |
| 92075-015 | G-3 |
| 92075-1002 | G-5 |
| 92075-1123 | C-11 |
| 92075-1123 | C-14 |
| 92075-1564 | G-13 |
| 92075-1634 | G-8 |
| 92075-1634 | I-5 |
| 92075-1808 | I-5 |
| 92075-1964 | I-4 |
| 92081-1708 | B-14 |
| 92092-0003 | E-8 |
| 92092-1087 | B-7 |
| 92093-0591 | B-6 |
| 92093-0592 | B-6 |
| 92093-1030 | F-11 |
| 92093-1030 | F-13 |
| 92093-1030 | G-3 |
| 92093-1472 | F-10 |
| 92104-0004 | G-14 |
| 92104-1064 | G-14 |
| 92104-2068 | G-14 |
| 92106-0004 | G-14 |
| 92107-0019 | G-14 |
| 92110-0057 | G-14 |
| 92110-0064 | G-14 |
| 92110-0065 | G-14 |
| 92110-0564 | G-14 |
| 92110-0567 | G-14 |
| 92110-1015 | G-14 |
| 92111-0008 | G-14 |
| 92112-0007 | G-14 |
| 92127-003 | G-14 |
| 92139-0023 | B-14 |
| 92139-0776 | B-11 |
| 92139-1090 | B-12 |
| 92139-1108 | B-10 |
| 92139-1109 | B-10 |
| 92139-1110 | B-10 |
| 92140-0008 | E-9 |
| 92144-1854 | B-11 |
| 92145-0184 | F-5 |
| 92145-0493 | F-7 |
| 92145-0562 | E-11 |
| 92145-0675 | B-11 |
| 92145-0893 | F-3 |
| 92145-0897 | B-11 |
| 92145-0902 | E-9 |
| 92145-0944 | B-14 |
| 92145-0946 | G-13 |
| 92145-1122 | B-14 |
| 92145-1159 | B-11 |
| 92145-1286 | F-8 |
| 92145-1319 | E-9 |
| 92150-1019 | C-3 |
| 92150-1154 | I-5 |
| 92150-1186 | C-14 |
| 92150-1216 | B-10 |
| 92150-1237 | C-13 |
| 92150-1251 | C-4 |
| 92150-1483 | C-4 |
| 92150-1548 | C-4 |
| 92150-1622 | C-4 |
| 92150-1692 | F-7 |
| 92150-1755 | B-3 |
| 92150-1779 | C-11 |
| 92150-1794 | C-4 |
| 92151-1135 | C-5 |
| 92151-1149 | E-7 |
| 92151-1221 | B-4 |
| 92151-1222 | C-4 |
| 92151-1223 | C-4 |
| 92151-1226 | B-14 |
| 92151-1234 | C-10 |
| 92151-1335 | C-13 |
| 92151-1378 | C-4 |
| 92151-1535 | E-4 |
| 92151-1539 | C-4 |
| 92151-1611 | B-7 |
| 92151-1626 | C-11 |
| 92151-1654 | E-10 |
| 92151-1654 | I-5 |
| 92151-1791 | I-7 |
| 92151-1873 | C-5 |
| 92151-1930 | B-9 |
| 92151-1930 | C-13 |
| 92151-1930 | D-3 |
| 92151-1946 | G-13 |
| 92151-1997 | D-3 |
| 92152-0070 | E-14 |
| 92152-0087 | E-13 |
| 92152-0103 | F-8 |
| 92152-0250 | I-8 |
| 92152-0667 | C-11 |
| 92152-0667 | C-14 |
| 92152-0946 | E-13 |
| 92152-1167 | B-9 |
| 92152-1583 | E-14 |
| 92152-1585 | E-14 |
| 92152-1587 | B-14 |
| 92152-1588 | B-14 |
| 92152-1592 | C-9 |
| 92152-1602 | B-7 |
| 92152-1617 | B-12 |
| 92152-1639 | I-7 |
| 92152-1640 | I-7 |
| 92152-1641 | I-7 |
| 92152-1655 | F-11 |
| 92152-1655 | F-13 |
| 92152-1655 | G-3 |
| 92152-1702 | I-5 |
| 92152-1705 | E-10 |
| 92152-1709 | C-7 |
| 92152-1765 | E-7 |
| 92153-0421 | B-14 |
| 92153-0446 | B-14 |
| 92153-0474 | E-3 |
| 92153-0484 | F-10 |
| 92153-0506 | F-10 |
| 92153-0549 | C-12 |
| 92153-0559 | E-4 |
| 92153-0628 | F-4 |
| 92153-0702 | B-7 |
| 92153-0753 | C-3 |
| 92153-0906 | G-12 |
| 92153-1089 | F-5 |
| 92153-1093 | F-5 |
| 92153-1094 | F-5 |
| 92153-1098 | E-4 |
| 92153-1295 | C-8 |
| 92153-1421 | F-11 |
| 92153-1421 | F-13 |
| 92153-1421 | G-3 |
| 92153-1505 | B-14 |
| 92153-1546 | E-8 |
| 92153-1569 | C-6 |
| 92153-1574 | C-5 |
| 92153-1616 | F-11 |
| 92153-1616 | F-13 |
| 92153-1616 | G-3 |
| 92153-1617 | I-8 |
| 92153-1625 | F-10 |
| 92153-1630 | E-5 |
| 92153-1662 | E-8 |
| 92153-1826 | F-7 |
| 92153-1837 | E-8 |
| 92153-1855 | C-11 |
| 92153-1930 | B-7 |
| 92153-1938 | E-9 |
| 92153-1956 | I-5 |
| 92154-0026 | E-10 |
| 92154-0026 | F-11 |
| 92154-0026 | F-13 |
| 92154-0026 | G-3 |
| 92154-0026 | G-8 |
| 92154-0026 | I-4 |
| 92154-0026 | I-5 |
| 92154-0026 | I-9 |
| 92154-0031 | G-13 |
| 92154-0099 | I-7 |
| 92154-0215 | E-5 |
| 92154-0215 | F-11 |
| 92154-0215 | F-13 |
| 92154-0215 | G-3 |
| 92154-0217 | B-7 |
| 92154-0226 | F-4 |
| 92154-0226 | F-6 |
| 92154-0235 | C-3 |
| 92154-0312 | E-4 |
| 92154-0313 | E-4 |
| 92154-0352 | B-11 |
| 92154-0356 | C-3 |
| 92154-0477 | B-13 |
| 92154-0729 | E-4 |
| 92154-0735 | C-10 |
| 92154-0745 | G-8 |
| 92154-0776 | D-3 |
| 92154-0784 | B-4 |
| 92154-0785 | I-4 |
| 92154-0843 | F-6 |
| 92154-0844 | F-5 |
| 92154-0844 | F-7 |
| 92154-0856 | B-7 |
| 92154-0917 | C-7 |
| 92154-0929 | F-6 |
| 92154-0949 | C-10 |
| 92154-0964 | C-7 |
| 92154-0965 | C-14 |
| 92154-0971 | E-11 |
| 92154-0987 | B-7 |
| 92154-1014 | E-5 |
| 92154-1026 | G-12 |
| 92154-1036 | I-7 |
| 92154-1037 | I-7 |
| 92154-1038 | I-7 |
| 92154-1050 | D-3 |
| 92154-1050 | E-5 |
| 92154-1050 | G-12 |
| 92154-1069 | C-10 |
| 92154-1080 | B-9 |
| 92154-1086 | B-3 |
| 92154-1191 | B-7 |
| 92154-1192 | B-7 |
| 92154-1212 | G-13 |
| 92154-1268 | E-10 |
| 92154-1708 | E-4 |
| 92160-1167 | G-10 |
| 92160-1167 | G-6 |
| 92160-1167 | I-5 |
| 92160-1513 | G-5 |
| 92160-1613 | E-6 |
| 92160-1613 | F-11 |
| 92160-1613 | F-13 |
| 92160-1613 | G-3 |
| 92160-1613 | G-8 |
| 92160-1613 | G-9 |
| 92160-1613 | I-5 |

| Part No. | Grid No. |
|---|---|
| 92160-1868 | C-3 |
| 92161-0037 | F-8 |
| 92161-0054 | G-9 |
| 92161-0147 | E-6 |
| 92161-0148 | E-6 |
| 92161-0183 | G-5 |
| 92161-0342 | E-14 |
| 92161-0356 | C-9 |
| 92161-0625 | I-4 |
| 92161-0673 | C-9 |
| 92161-0685 | C-9 |
| 92161-0765 | E-10 |
| 92161-0776 | G-10 |
| 92161-0855 | I-8 |
| 92161-0999 | B-7 |
| 92161-1367 | G-8 |
| 92161-1431 | G-8 |
| 92161-1460 | I-8 |
| 92161-1466 | B-14 |
| 92161-1468 | F-11 |
| 92161-1468 | F-13 |
| 92161-1468 | G-3 |
| 92161-1472 | I-8 |
| 92161-1475 | B-7 |
| 92161-1482 | F-11 |
| 92161-1482 | F-13 |
| 92161-1482 | G-3 |
| 92161-1511 | E-4 |
| 92161-1539 | F-12 |
| 92161-1539 | F-13 |
| 92161-1539 | G-3 |
| 92170-1091 | F-6 |
| 92170-1118 | C-3 |
| 92170-1492 | F-12 |
| 92170-1492 | F-13 |
| 92170-1492 | G-3 |
| 92170-1577 | C-3 |
| 92170-1577 | C-5 |
| 92170-3749 | C-7 |
| 92171-0092 | C-3 |
| 92171-0133 | B-7 |
| 92171-0179 | D-3 |
| 92171-0316 | E-6 |
| 92171-0652 | D-3 |
| 92171-0652 | E-6 |
| 92171-0652 | I-4 |
| 92171-0789 | E-6 |
| 92171-1213 | E-6 |
| 92171-1420 | C-10 |
| 92171-1539 | B-6 |
| 92171-1595 | C-3 |
| 92171-1666 | G-7 |
| 92172-0004 | E-10 |
| 92172-0090 | C-3 |
| 92172-0183 | F-8 |
| 92172-0262 | I-4 |
| 92172-0320 | F-4 |
| 92172-0343 | G-10 |
| 92172-0395 | G-11 |
| 92172-0427 | G-10 |
| 92172-0441 | G-6 |
| 92172-0477 | G-9 |
| 92172-0481 | G-10 |
| 92172-0803 | B-6 |
| 92172-0804 | B-6 |
| 92172-0805 | B-6 |
| 92172-0823 | I-6 |
| 92172-0828 | C-7 |
| 92172-1060 | F-8 |
| 92173-0072 | D-3 |
| 92173-0736 | B-7 |
| 92173-0912 | C-5 |
| 92173-0921 | B-7 |
| 92173-0922 | B-3 |
| 92173-0927 | B-6 |
| 92173-0929 | B-3 |
| 92173-0937 | E-10 |
| 92173-0945 | F-4 |
| 92173-0972 | E-10 |
| 92173-1033 | C-6 |
| 92173-1034 | C-3 |
| 92173-1042 | G-7 |
| 92173-1044 | B-6 |
| 92173-1055 | B-6 |
| 92173-1229 | G-9 |
| 92180-1014 | B-8 |
| 92180-1016 | B-8 |
| 92180-1018 | B-8 |
| 92180-1020 | B-8 |
| 92180-1022 | B-8 |
| 92180-1024 | B-8 |
| 92180-1026 | B-8 |
| 92180-1028 | B-8 |
| 92180-1030 | B-8 |
| 92180-1032 | B-8 |
| 92180-1034 | B-8 |
| 92180-1036 | B-8 |
| 92180-1038 | B-8 |
| 92180-1040 | B-8 |
| 92180-1042 | B-8 |
| 92180-1044 | B-8 |
| 92180-1046 | B-8 |
| 92180-1048 | B-8 |
| 92180-1050 | B-8 |
| 92180-1052 | B-8 |
| 92180-1054 | B-8 |
| 92191-1551 | C-7 |
| 92191-1552 | C-7 |
| 92192-0033 | B-6 |
| 92192-0593 | F-12 |
| 92192-0593 | F-13 |
| 92192-0593 | G-3 |
| 92192-0798 | F-12 |
| 92192-0798 | F-14 |
| 92192-0798 | G-3 |
| 92192-1104 | C-3 |
| 92192-1106 | B-6 |
| 92192-1158 | B-6 |
| 92192-1265 | C-7 |
| 92192-1266 | C-7 |
| 92192-1311 | F-12 |
| 92192-1311 | F-14 |
| 92192-1311 | G-3 |
| 92192-1312 | F-12 |
| 92192-1312 | F-14 |
| 92192-1312 | G-3 |
| 92192-1313 | B-6 |
| 92200-0043 | E-9 |
| 92200-0085 | F-10 |
| 92200-0115 | C-4 |
| 92200-0164 | G-11 |
| 92200-0165 | G-11 |
| 92200-0174 | B-14 |
| 92200-0284 | G-10 |
| 92200-0363 | B-3 |
| 92200-0369 | C-11 |
| 92200-0753 | E-3 |
| 92200-0780 | G-13 |
| 92200-0781 | E-3 |
| 92200-0786 | C-10 |
| 92200-0818 | C-10 |
| 92200-0832 | E-4 |
| 92200-0854 | G-11 |
| 92200-0855 | G-11 |
| 92200-0857 | E-4 |
| 92200-0863 | B-12 |
| 92200-0880 | E-4 |
| 92200-1042 | E-4 |
| 92200-1042 | E-8 |
| 92200-1239 | B-12 |
| 92200-1251 | E-10 |
| 92200-1260 | B-11 |
| 92200-1375 | B-12 |
| 92200-1377 | B-7 |
| 92200-1388 | E-10 |
| 92200-1423 | B-11 |
| 92200-1457 | B-12 |
| 92200-1480 | E-10 |
| 92200-1480 | E-6 |
| 92200-1480 | F-12 |
| 92200-1480 | F-14 |
| 92200-1480 | G-3 |
| 92200-1480 | I-4 |
| 92200-1480 | I-6 |
| 92200-1487 | B-11 |
| 92200-1489 | E-14 |
| 92200-1522 | B-12 |
| 92200-1523 | B-12 |
| 92200-1524 | B-12 |
| 92200-3807 | C-7 |
| 92210-0006 | F-8 |
| 92210-0007 | G-13 |
| 92210-0076 | B-7 |
| 92210-0116 | E-7 |
| 92210-0117 | E-7 |
| 92210-0170 | E-10 |
| 92210-0188 | C-13 |
| 92210-0276 | E-14 |
| 92210-0277 | I-8 |
| 92210-0351 | I-4 |
| 92210-0498 | E-10 |
| 92210-0498 | F-12 |
| 92210-0498 | F-14 |
| 92210-0498 | G-4 |
| 92210-0498 | G-8 |
| 92210-0498 | I-4 |
| 92210-0498 | I-6 |
| 92210-0498 | I-9 |
| 92210-0534 | E-3 |
| 92210-0535 | E-3 |
| 92210-0775 | E-7 |
| 92210-1100 | B-14 |
| 92210-1101 | B-14 |
| 92210-1139 | B-7 |
| 92210-1139 | E-8 |
| 92210-1150 | E-8 |
| 92210-1203 | E-4 |
| 92210-1397 | E-7 |
| 99901-0039-03 | I-10 |
| 99924-1463-03 | I-10 |
| 99953-1079-03 | I-10 |
| 99954-1093-03 | I-10 |
| 99955-1066-03 | I-10 |
| 99956-1054-03 | I-10 |
| 99976-1736 | I-10 |
| 99976-1737 | I-10 |
| 99976-1827 | I-10 |
| 99976-1828 | I-10 |
| 99976-1871 | I-10 |
| 99976-1872 | I-10 |
| 99976-1969 | I-10 |
| 99976-1970 | I-10 |
| 99994-0334 | I-7 |
| 99994-0337 | I-9 |
| 99994-0410-15T | I-8 |
| 99994-0410-25Y | I-8 |
| 99994-0410-35K | I-8 |
| 99994-0410-45L | I-8 |
| 99994-0410-45Q | I-8 |
| 99994-0410-660 | I-8 |
| 99994-0410-739 | I-8 |
| 99999-0345 | C-7 |
| 99999-0523 | C-8 |

Accessory(Engine Guard) ..... I-7
Accessory(Meter Cover) ..... I-9
Accessory(Single Seat Cover) ..... I-8
Air Cleaner ..... B-6
Brake Pedal ..... F-3
Cables ..... G-7
Camshaft(s) ..... B-9
Chain Cover ..... G-8
Chassis Electrical Equipment ..... G-12
Clutch ..... B-11
Cowling ..... I-4
Cowling Lowers ..... I-5/I-6
Crankcase ..... C-3
Crankcase Bolt Pattern ..... C-4
Crankshaft ..... B-10
Cylinder ..... B-5
Cylinder Head ..... B-3
Cylinder Head Cover ..... B-4
Decals(Black)(AEF) ..... H-9
Decals(Black)(AFF) ..... H-11
Decals(Ebony)(ADS) ..... H-5
Decals(Ebony)(AGF) ..... H-14
Decals(Green)(ADS) ..... H-4
Decals(Green)(AEF) ..... H-8
Decals(Green)(AFF) ..... H-10
Decals(Orange)(AEF) ..... H-7
Decals(Red)(AGF) ..... H-13
Decals(White)(ADS) ..... H-6
Decals(White)(AFF) ..... H-12
Decals(White)(AGF) ..... I-3
Engine Cover(s) ..... C-5
Engine Mount ..... E-4
Fenders ..... E-10
Footrests ..... E-9
Frame ..... E-3
Frame Fittings ..... E-5/E-6
Front Brake ..... F-5
Front Fork ..... F-10/F-9
Front Hub ..... E-13
Front Master Cylinder ..... F-4
Fuel Injection ..... C-9
Fuel Pump ..... C-8
Fuel Tank(ADS/AEF) ..... F-11/F-12
Fuel Tank(AFF) ..... F-13/F-14
Fuel Tank(AGF) ..... G-3/G-4
Gear Change Drum ..... B-13
Gear Change Mechanism ..... B-14
Generator ..... C-11
Handlebar ..... F-8
Headlight(s) ..... G-9
Ignition Switch ..... G-13
Ignition System ..... C-12
Labels ..... H-3
Manual ..... I-10
Meter(s) ..... G-6
Muffler(s) ..... B-7
Oil Pan ..... C-6
Oil Pump ..... C-10
Owner's Tools ..... G-14
Piston(s) ..... B-5
Radiator ..... C-14
Rear Brake ..... F-7
Rear Hub ..... E-14
Rear Master Cylinder ..... F-6
Seat ..... G-5
Shift Fork(s) ..... B-13
Shock Absorber ..... E-8
Side Covers ..... G-8
Stand(s) ..... E-11
Starter Motor ..... C-13
Suspension ..... E-8
Swingarm ..... E-7
Taillight(s) ..... G-10
Tensioner ..... B-9
Throttle ..... C-7
Tires ..... E-12
Transmission ..... B-12
Turn Signals ..... G-11
Valve(s) ..... B-8
Water Pipe ..... D-3

Accessory(Engine Guard) ..... I-7
Accessory(Meter Cover) ..... I-9
Accessory(Single Seat Cover) ..... I-8
Air Cleaner ..... B-6
Brake Pedal ..... F-3
Cables ..... G-7
Camshaft(s) ..... B-9
Chain Cover ..... G-8
Chassis Electrical Equipment ..... G-12
Clutch ..... B-11
Cowling ..... I-4
Cowling Lowers ..... I-5/I-6
Crankcase ..... C-3
Crankcase Bolt Pattern ..... C-4
Crankshaft ..... B-10
Cylinder ..... B-5
Cylinder Head ..... B-3
Cylinder Head Cover ..... B-4
Decals(Black)(AEF) ..... H-9
Decals(Black)(AFF) ..... H-11
Decals(Ebony)(ADS) ..... H-5
Decals(Ebony)(AGF) ..... H-14
Decals(Green)(ADS) ..... H-4
Decals(Green)(AEF) ..... H-8
Decals(Green)(AFF) ..... H-10
Decals(Orange)(AEF) ..... H-7
Decals(Red)(AGF) ..... H-13
Decals(White)(ADS) ..... H-6
Decals(White)(AFF) ..... H-12
Decals(White)(AGF) ..... I-3
Engine Cover(s) ..... C-5
Engine Mount ..... E-4
Fenders ..... E-10
Footrests ..... E-9
Frame ..... E-3
Frame Fittings ..... E-5/E-6
Front Brake ..... F-5
Front Fork ..... F-10/F-9
Front Hub ..... E-13
Front Master Cylinder ..... F-4
Fuel Injection ..... C-9
Fuel Pump ..... C-8
Fuel Tank(ADS/AEF) ..... F-11/F-12
Fuel Tank(AFF) ..... F-13/F-14
Fuel Tank(AGF) ..... G-3/G-4
Gear Change Drum ..... B-13
Gear Change Mechanism ..... B-14
Generator ..... C-11
Handlebar ..... F-8
Headlight(s) ..... G-9
Ignition Switch ..... G-13
Ignition System ..... C-12
Labels ..... H-3
Manual ..... I-10
Meter(s) ..... G-6
Muffler(s) ..... B-7
Oil Pan ..... C-6
Oil Pump ..... C-10
Owner's Tools ..... G-14
Piston(s) ..... B-5
Radiator ..... C-14
Rear Brake ..... F-7
Rear Hub ..... E-14
Rear Master Cylinder ..... F-6
Seat ..... G-5
Shift Fork(s) ..... B-13
Shock Absorber ..... E-8
Side Covers ..... G-8
Stand(s) ..... E-11
Starter Motor ..... C-13
Suspension ..... E-8
Swingarm ..... E-7
Taillight(s) ..... G-10
Tensioner ..... B-9
Throttle ..... C-7
Tires ..... E-12
Transmission ..... B-12
Turn Signals ..... G-11
Valve(s) ..... B-8
Water Pipe ..... D-3

Accessory(Engine Guard) ..... I-7
Accessory(Meter Cover) ..... I-9
Accessory(Single Seat Cover) ..... I-8
Air Cleaner ..... B-6
Brake Pedal ..... F-3
Cables ..... G-7
Camshaft(s) ..... B-9
Chain Cover ..... G-8
Chassis Electrical Equipment ..... G-12
Clutch ..... B-11
Cowling ..... I-4
Cowling Lowers ..... I-5/I-6
Crankcase ..... C-3
Crankcase Bolt Pattern ..... C-4
Crankshaft ..... B-10
Cylinder ..... B-5
Cylinder Head ..... B-3
Cylinder Head Cover ..... B-4
Decals(Black)(AEF) ..... H-9
Decals(Black)(AFF) ..... H-11
Decals(Ebony)(ADS) ..... H-5
Decals(Ebony)(AGF) ..... H-14
Decals(Green)(ADS) ..... H-4
Decals(Green)(AEF) ..... H-8
Decals(Green)(AFF) ..... H-10
Decals(Orange)(AEF) ..... H-7
Decals(Red)(AGF) ..... H-13
Decals(White)(ADS) ..... H-6
Decals(White)(AFF) ..... H-12
Decals(White)(AGF) ..... I-3
Engine Cover(s) ..... C-5
Engine Mount ..... E-4
Fenders ..... E-10
Footrests ..... E-9
Frame ..... E-3
Frame Fittings ..... E-5/E-6
Front Brake ..... F-5
Front Fork ..... F-10/F-9
Front Hub ..... E-13
Front Master Cylinder ..... F-4
Fuel Injection ..... C-9
Fuel Pump ..... C-8
Fuel Tank(ADS/AEF) ..... F-11/F-12
Fuel Tank(AFF) ..... F-13/F-14
Fuel Tank(AGF) ..... G-3/G-4
Gear Change Drum ..... B-13
Gear Change Mechanism ..... B-14
Generator ..... C-11
Handlebar ..... F-8
Headlight(s) ..... G-9
Ignition Switch ..... G-13
Ignition System ..... C-12
Labels ..... H-3
Manual ..... I-10
Meter(s) ..... G-6
Muffler(s) ..... B-7
Oil Pan ..... C-6
Oil Pump ..... C-10
Owner's Tools ..... G-14
Piston(s) ..... B-5
Radiator ..... C-14
Rear Brake ..... F-7
Rear Hub ..... E-14
Rear Master Cylinder ..... F-6
Seat ..... G-5
Shift Fork(s) ..... B-13
Shock Absorber ..... E-8
Side Covers ..... G-8
Stand(s) ..... E-11
Starter Motor ..... C-13
Suspension ..... E-8
Swingarm ..... E-7
Taillight(s) ..... G-10
Tensioner ..... B-9
Throttle ..... C-7
Tires ..... E-12
Transmission ..... B-12
Turn Signals ..... G-11
Valve(s) ..... B-8
Water Pipe ..... D-3

Accessory(Engine Guard) ..... I-7
Accessory(Meter Cover) ..... I-9
Accessory(Single Seat Cover) ..... I-8
Air Cleaner ..... B-6
Brake Pedal ..... F-3
Cables ..... G-7
Camshaft(s) ..... B-9
Chain Cover ..... G-8
Chassis Electrical Equipment ..... G-12
Clutch ..... B-11
Cowling ..... I-4
Cowling Lowers ..... I-5/I-6
Crankcase ..... C-3
Crankcase Bolt Pattern ..... C-4
Crankshaft ..... B-10
Cylinder ..... B-5
Cylinder Head ..... B-3
Cylinder Head Cover ..... B-4
Decals(Black)(AEF) ..... H-9
Decals(Black)(AFF) ..... H-11
Decals(Ebony)(ADS) ..... H-5
Decals(Ebony)(AGF) ..... H-14
Decals(Green)(ADS) ..... H-4
Decals(Green)(AEF) ..... H-8
Decals(Green)(AFF) ..... H-10
Decals(Orange)(AEF) ..... H-7
Decals(Red)(AGF) ..... H-13
Decals(White)(ADS) ..... H-6
Decals(White)(AFF) ..... H-12
Decals(White)(AGF) ..... I-3
Engine Cover(s) ..... C-5
Engine Mount ..... E-4
Fenders ..... E-10
Footrests ..... E-9
Frame ..... E-3
Frame Fittings ..... E-5/E-6
Front Brake ..... F-5
Front Fork ..... F-10/F-9
Front Hub ..... E-13
Front Master Cylinder ..... F-4
Fuel Injection ..... C-9
Fuel Pump ..... C-8
Fuel Tank(ADS/AEF) ..... F-11/F-12
Fuel Tank(AFF) ..... F-13/F-14
Fuel Tank(AGF) ..... G-3/G-4
Gear Change Drum ..... B-13
Gear Change Mechanism ..... B-14
Generator ..... C-11
Handlebar ..... F-8
Headlight(s) ..... G-9
Ignition Switch ..... G-13
Ignition System ..... C-12
Labels ..... H-3
Manual ..... I-10
Meter(s) ..... G-6
Muffler(s) ..... B-7
Oil Pan ..... C-6
Oil Pump ..... C-10
Owner's Tools ..... G-14
Piston(s) ..... B-5
Radiator ..... C-14
Rear Brake ..... F-7
Rear Hub ..... E-14
Rear Master Cylinder ..... F-6
Seat ..... G-5
Shift Fork(s) ..... B-13
Shock Absorber ..... E-8
Side Covers ..... G-8
Stand(s) ..... E-11
Starter Motor ..... C-13
Suspension ..... E-8
Swingarm ..... E-7
Taillight(s) ..... G-10
Tensioner ..... B-9
Throttle ..... C-7
Tires ..... E-12
Transmission ..... B-12
Turn Signals ..... G-11
Valve(s) ..... B-8
Water Pipe ..... D-3

Accessory(Engine Guard) ..... I-7
Accessory(Meter Cover) ..... I-9
Accessory(Single Seat Cover) ..... I-8
Air Cleaner ..... B-6
Brake Pedal ..... F-3
Cables ..... G-7
Camshaft(s) ..... B-9
Chain Cover ..... G-8
Chassis Electrical Equipment ..... G-12
Clutch ..... B-11
Cowling ..... I-4
Cowling Lowers ..... I-5/I-6
Crankcase ..... C-3
Crankcase Bolt Pattern ..... C-4
Crankshaft ..... B-10
Cylinder ..... B-5
Cylinder Head ..... B-3
Cylinder Head Cover ..... B-4
Decals(Black)(AEF) ..... H-9
Decals(Black)(AFF) ..... H-11
Decals(Ebony)(ADS) ..... H-5
Decals(Ebony)(AGF) ..... H-14
Decals(Green)(ADS) ..... H-4
Decals(Green)(AEF) ..... H-8
Decals(Green)(AFF) ..... H-10
Decals(Orange)(AEF) ..... H-7
Decals(Red)(AGF) ..... H-13
Decals(White)(ADS) ..... H-6
Decals(White)(AFF) ..... H-12
Decals(White)(AGF) ..... I-3
Engine Cover(s) ..... C-5
Engine Mount ..... E-4
Fenders ..... E-10
Footrests ..... E-9
Frame ..... E-3
Frame Fittings ..... E-5/E-6
Front Brake ..... F-5
Front Fork ..... F-10/F-9
Front Hub ..... E-13
Front Master Cylinder ..... F-4
Fuel Injection ..... C-9
Fuel Pump ..... C-8
Fuel Tank(ADS/AEF) ..... F-11/F-12
Fuel Tank(AFF) ..... F-13/F-14
Fuel Tank(AGF) ..... G-3/G-4
Gear Change Drum ..... B-13
Gear Change Mechanism ..... B-14
Generator ..... C-11
Handlebar ..... F-8
Headlight(s) ..... G-9
Ignition Switch ..... G-13
Ignition System ..... C-12
Labels ..... H-3
Manual ..... I-10
Meter(s) ..... G-6
Muffler(s) ..... B-7
Oil Pan ..... C-6
Oil Pump ..... C-10
Owner's Tools ..... G-14
Piston(s) ..... B-5
Radiator ..... C-14
Rear Brake ..... F-7
Rear Hub ..... E-14
Rear Master Cylinder ..... F-6
Seat ..... G-5
Shift Fork(s) ..... B-13
Shock Absorber ..... E-8
Side Covers ..... G-8
Stand(s) ..... E-11
Starter Motor ..... C-13
Suspension ..... E-8
Swingarm ..... E-7
Taillight(s) ..... G-10
Tensioner ..... B-9
Throttle ..... C-7
Tires ..... E-12
Transmission ..... B-12
Turn Signals ..... G-11
Valve(s) ..... B-8
Water Pipe ..... D-3

Accessory(Engine Guard) ..... I-7
Accessory(Meter Cover) ..... I-9
Accessory(Single Seat Cover) ..... I-8
Air Cleaner ..... B-6
Brake Pedal ..... F-3
Cables ..... G-7
Camshaft(s) ..... B-9
Chain Cover ..... G-8
Chassis Electrical Equipment ..... G-12
Clutch ..... B-11
Cowling ..... I-4
Cowling Lowers ..... I-5/I-6
Crankcase ..... C-3
Crankcase Bolt Pattern ..... C-4
Crankshaft ..... B-10
Cylinder ..... B-5
Cylinder Head ..... B-3
Cylinder Head Cover ..... B-4
Decals(Black)(AEF) ..... H-9
Decals(Black)(AFF) ..... H-11
Decals(Ebony)(ADS) ..... H-5
Decals(Ebony)(AGF) ..... H-14
Decals(Green)(ADS) ..... H-4
Decals(Green)(AEF) ..... H-8
Decals(Green)(AFF) ..... H-10
Decals(Orange)(AEF) ..... H-7
Decals(Red)(AGF) ..... H-13
Decals(White)(ADS) ..... H-6
Decals(White)(AFF) ..... H-12
Decals(White)(AGF) ..... I-3
Engine Cover(s) ..... C-5
Engine Mount ..... E-4
Fenders ..... E-10
Footrests ..... E-9
Frame ..... E-3
Frame Fittings ..... E-5/E-6
Front Brake ..... F-5
Front Fork ..... F-10/F-9
Front Hub ..... E-13
Front Master Cylinder ..... F-4
Fuel Injection ..... C-9
Fuel Pump ..... C-8
Fuel Tank(ADS/AEF) ..... F-11/F-12
Fuel Tank(AFF) ..... F-13/F-14
Fuel Tank(AGF) ..... G-3/G-4
Gear Change Drum ..... B-13
Gear Change Mechanism ..... B-14
Generator ..... C-11
Handlebar ..... F-8
Headlight(s) ..... G-9
Ignition Switch ..... G-13
Ignition System ..... C-12
Labels ..... H-3
Manual ..... I-10
Meter(s) ..... G-6
Muffler(s) ..... B-7
Oil Pan ..... C-6
Oil Pump ..... C-10
Owner's Tools ..... G-14
Piston(s) ..... B-5
Radiator ..... C-14
Rear Brake ..... F-7
Rear Hub ..... E-14
Rear Master Cylinder ..... F-6
Seat ..... G-5
Shift Fork(s) ..... B-13
Shock Absorber ..... E-8
Side Covers ..... G-8
Stand(s) ..... E-11
Starter Motor ..... C-13
Suspension ..... E-8
Swingarm ..... E-7
Taillight(s) ..... G-10
Tensioner ..... B-9
Throttle ..... C-7
Tires ..... E-12
Transmission ..... B-12
Turn Signals ..... G-11
Valve(s) ..... B-8
Water Pipe ..... D-3

Accessory(Engine Guard) ..... I-7
Accessory(Meter Cover) ..... I-9
Accessory(Single Seat Cover) ..... I-8
Air Cleaner ..... B-6
Brake Pedal ..... F-3
Cables ..... G-7
Camshaft(s) ..... B-9
Chain Cover ..... G-8
Chassis Electrical Equipment ..... G-12
Clutch ..... B-11
Cowling ..... I-4
Cowling Lowers ..... I-5/I-6
Crankcase ..... C-3
Crankcase Bolt Pattern ..... C-4
Crankshaft ..... B-10
Cylinder ..... B-5
Cylinder Head ..... B-3
Cylinder Head Cover ..... B-4
Decals(Black)(AEF) ..... H-9
Decals(Black)(AFF) ..... H-11
Decals(Ebony)(ADS) ..... H-5
Decals(Ebony)(AGF) ..... H-14
Decals(Green)(ADS) ..... H-4
Decals(Green)(AEF) ..... H-8
Decals(Green)(AFF) ..... H-10
Decals(Orange)(AEF) ..... H-7
Decals(Red)(AGF) ..... H-13
Decals(White)(ADS) ..... H-6
Decals(White)(AFF) ..... H-12
Decals(White)(AGF) ..... I-3
Engine Cover(s) ..... C-5
Engine Mount ..... E-4
Fenders ..... E-10
Footrests ..... E-9
Frame ..... E-3
Frame Fittings ..... E-5/E-6
Front Brake ..... F-5
Front Fork ..... F-10/F-9
Front Hub ..... E-13
Front Master Cylinder ..... F-4
Fuel Injection ..... C-9
Fuel Pump ..... C-8
Fuel Tank(ADS/AEF) ..... F-11/F-12
Fuel Tank(AFF) ..... F-13/F-14
Fuel Tank(AGF) ..... G-3/G-4
Gear Change Drum ..... B-13
Gear Change Mechanism ..... B-14
Generator ..... C-11
Handlebar ..... F-8
Headlight(s) ..... G-9
Ignition Switch ..... G-13
Ignition System ..... C-12
Labels ..... H-3
Manual ..... I-10
Meter(s) ..... G-6
Muffler(s) ..... B-7
Oil Pan ..... C-6
Oil Pump ..... C-10
Owner's Tools ..... G-14
Piston(s) ..... B-5
Radiator ..... C-14
Rear Brake ..... F-7
Rear Hub ..... E-14
Rear Master Cylinder ..... F-6
Seat ..... G-5
Shift Fork(s) ..... B-13
Shock Absorber ..... E-8
Side Covers ..... G-8
Stand(s) ..... E-11
Starter Motor ..... C-13
Suspension ..... E-8
Swingarm ..... E-7
Taillight(s) ..... G-10
Tensioner ..... B-9
Throttle ..... C-7
Tires ..... E-12
Transmission ..... B-12
Turn Signals ..... G-11
Valve(s) ..... B-8
Water Pipe ..... D-3

Accessory(Engine Guard) ..... I-7
Accessory(Meter Cover) ..... I-9
Accessory(Single Seat Cover) ..... I-8
Air Cleaner ..... B-6
Brake Pedal ..... F-3
Cables ..... G-7
Camshaft(s) ..... B-9
Chain Cover ..... G-8
Chassis Electrical Equipment ..... G-12
Clutch ..... B-11
Cowling ..... I-4
Cowling Lowers ..... I-5/I-6
Crankcase ..... C-3
Crankcase Bolt Pattern ..... C-4
Crankshaft ..... B-10
Cylinder ..... B-5
Cylinder Head ..... B-3
Cylinder Head Cover ..... B-4
Decals(Black)(AEF) ..... H-9
Decals(Black)(AFF) ..... H-11
Decals(Ebony)(ADS) ..... H-5
Decals(Ebony)(AGF) ..... H-14
Decals(Green)(ADS) ..... H-4
Decals(Green)(AEF) ..... H-8
Decals(Green)(AFF) ..... H-10
Decals(Orange)(AEF) ..... H-7
Decals(Red)(AGF) ..... H-13
Decals(White)(ADS) ..... H-6
Decals(White)(AFF) ..... H-12
Decals(White)(AGF) ..... I-3
Engine Cover(s) ..... C-5
Engine Mount ..... E-4
Fenders ..... E-10
Footrests ..... E-9
Frame ..... E-3
Frame Fittings ..... E-5/E-6
Front Brake ..... F-5
Front Fork ..... F-10/F-9
Front Hub ..... E-13
Front Master Cylinder ..... F-4
Fuel Injection ..... C-9
Fuel Pump ..... C-8
Fuel Tank(ADS/AEF) ..... F-11/F-12
Fuel Tank(AFF) ..... F-13/F-14
Fuel Tank(AGF) ..... G-3/G-4
Gear Change Drum ..... B-13
Gear Change Mechanism ..... B-14
Generator ..... C-11
Handlebar ..... F-8
Headlight(s) ..... G-9
Ignition Switch ..... G-13
Ignition System ..... C-12
Labels ..... H-3
Manual ..... I-10
Meter(s) ..... G-6
Muffler(s) ..... B-7
Oil Pan ..... C-6
Oil Pump ..... C-10
Owner's Tools ..... G-14
Piston(s) ..... B-5
Radiator ..... C-14
Rear Brake ..... F-7
Rear Hub ..... E-14
Rear Master Cylinder ..... F-6
Seat ..... G-5
Shift Fork(s) ..... B-13
Shock Absorber ..... E-8
Side Covers ..... G-8
Stand(s) ..... E-11
Starter Motor ..... C-13
Suspension ..... E-8
Swingarm ..... E-7
Taillight(s) ..... G-10
Tensioner ..... B-9
Throttle ..... C-7
Tires ..... E-12
Transmission ..... B-12
Turn Signals ..... G-11
Valve(s) ..... B-8
Water Pipe ..... D-3