Kawasaki

MICRO-K

PARTS CATALOG

’06～’08 ER650 A6S/A7F/A8F

(ER-6n)

Publications A-2
Model Identification A-4
Engine B-1
Chassis E-1

© Kawasaki Heavy Industries, Ltd. 2007

Engine No. Location:
Upper crankcase, front side

Year & Model	**’06 ER650A6S**	**’07 ER650A7F**	**’08 ER650A8F**
Color	1. Ebony (H8)	1. Galaxy Silver Type 2 (474)	1. KMT.Candy Lime Green (15P)
	2. Galaxy Silver Type 2 (474)	2. Metallic Diablo Black (17K)	2. KMT.Candy Plasma Blue (15D)
	3. Vivid Yellow (789)	3. Pearl Wildfire Orange (17H)	3. KMT.Metallic Diablo Black (15Q)
VIN No. Range	JKAER650AAA000001 ～ 030000	JKAER650AAA030001 ～	JKAER650AADA00007 ～
Engine No. Range	ER650AE000001 ～	ER650AE000001 ～	ER650AEA00001 ～

Year & Model	Owner’s Manual	A&P Manual		Service Manual		Microfiche
		General	Supplement	Basic	Supplement	
2006 ER650A6S	99976-1249(EN/FR/DE/IT) 99986-1292(English)	99939-1317-04		99924-1360-03		99912-1398-05
2007 ER650A7F	99976-1319(EN/FR/DE/IT) 99986-1375(English)	See above		See above		See above
2008 ER650A8F	99976-1401(EN/FR/DE) 99976-1402(IT/ES/NL) 99986-1431(English)	See above		99924-1360-04		See above

PARTS LIST INFORMATION

This parts catalog lists parts and sub-assemblies provided as spare parts.
When it becomes necessary to replace parts always use KAWASAKI GENUINE PARTS. Strict inspection assures quality and performance of KAWASAKI GENUINE PARTS.

1. HOW TO ODER PARTS

When ordering parts be sure to use the catalog for the correct model and year of the vehicle. Include the following items exactly as listed in this catalog on your parts order.

Part Number
Part Name
Color Code
Specify the color using both color code (which is part of the part number) and name when ordering painted parts.
Example: 51001-5074-H8 TANK-COMP-FUEL,EBONY

Parts not shown disassembled in the illustrations of this parts catalog are not sold separately; only the complete units or next higher assemblies illustrated, are supplied, as spare parts.

2. EXPLANATION OF PARTS CATALOG FORMAT

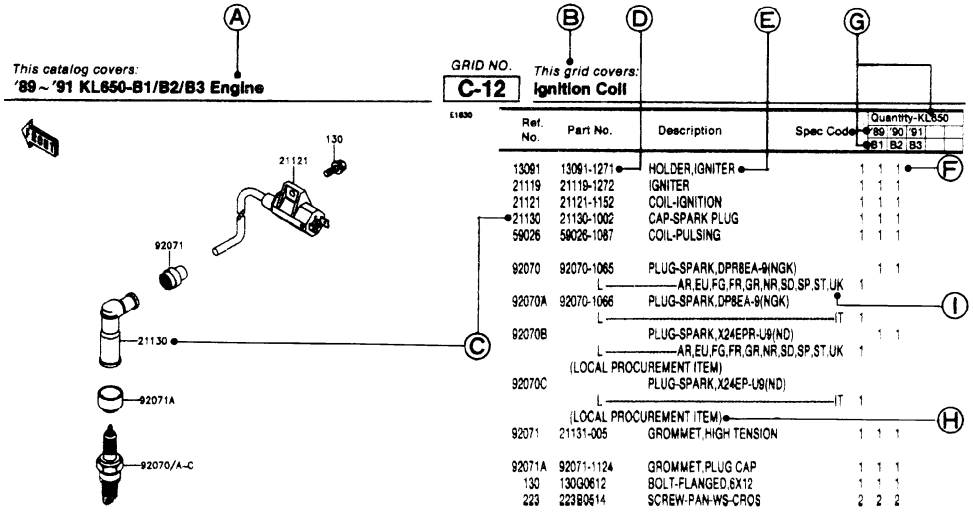

A. Year & Model Title
This title describes the year(s) and model(s) contained in this catalog.

B. Part Group Title
A representative name for the group of parts illustrated on this page.

C. Referernce Number
The reference number is listed on the illustration and parts list. It is the link between the illustration and the parts list.

D. Part Number
The number assigned to a part for the purpose of parts ordering.

1) Part Number (New Structure)
00000 – 0000 – 00 or 00000 – 0000 – 000
Color Code
Production Number
Function Code

(Old Structure)
00000 – 000 – 00

2) Standard Hardware Number
000 0 0000
Size Number
Material or Surface Treatment Code (Alphabet)
Item Number

E. Description
Describes the main function of the part and includes data such as size, number of teeth, color,etc.

List of Abbreviations

(+)	Plus	HEX	Hexagonal	REF	Reference
(-)	Minus	ID =	Inside Diameter	RH	Right Hand
&	And	KPH	Killometers Per Hour	RPM	Revolutions Per Minute
2ND	Second	L	Link	RR	Rear
3RD	Third	L =	Length	STD	Standard
4TH	Fourth	L/	Less	T	Teeth
AR	As Required	LH	Left Hand	T =	Thickness
ASSY	Assembly	LWR	Lower	U/S	Under Size
CA	Cut Away	MM	Millimeter	UPP	Upper
CNT	Center	MPH	Miles Per Hour	V	Volt
COMP	Complete	NA	Not Available	W	Watt
D	Degree	O/S	Over Size	W/	With
FR	Front	OD =	Outside Diameter	WD	With Decal
G	Gram	PR	Ply Rating	WOD	Without Decal

F. Quantity
Specifies how many of a part are required at the indicated position on the illustration.

G. Year & Model
Indicates which parts are used for a specific vehicle year and model.

H. Additional Information
Additional Information is shown as follows:
1) (OPTION) Part is not installed as original equipment, but is available separately.
2) (RACING USE ONLY) Part is to be used for closed course racing only on this vehicle.
3) (OFF-ROAD USE ONLY) Part is for off-road use only this vehicle.
4) (LOCAL PROCUREMENT ITEM) Part is obtainable from a local source. No part number is listed.
5) Technical relationships between old part numbers and new part numbers are shown as follows:
INTERCHANGE - Old part or new part can be used.
SUBSTITUTE - New part replaces old part. Old part cannot be used in place of new part.
6) Mid-Year part number changes on a vehicle are noted by engine or frame number references.

(- KZ400DE001181)	Affected units are from beginning of model year production up to and including this engine number.
(KZ400D-008111 -)	Affected units are from this frame number to the end of model year production.
(KZ400DE008181 - KZ400DE018888)	Affected units are in this engine number range.

I. Specification Code
Identifies the specification of the vehicle for which the part applies. If no spec code is listed, that means the part is used for all specifications.

Spec Code	Specification	'06	'07	'08		
		A6S	A7F	A8F		
UK	United Kingdom	O	O	O		
WV	Whole Vehicle Type Approval	O	O	O		

ER650A6S

Left Side View

Right Side View

ER650A7F

Left Side View

Right Side View

ER650A8F

Left Side View

Right Side View

’06 ER650A6S

O : Applicable ×: Not applicable

Color: Ebony (H8) **(1)**

Part No.	Description	Spec.Code UK	WV											
11012-1717-10M	CAP,CROSS PIPE,M.BRONZE	O	O											
11065-0121-793	CAP,CHAIN ADJUSTER,M.BRONZE	O	O											
11065-0125-10M	CAP,FRAME,M.BRONZE	O	O											
14091-0458-H8	COVER,HEAD LAMP,LH,EBONY	O	O											
14091-0459-H8	COVER,HEAD LAMP,RH,EBONY	O	O											
14091-0461-837	COVER,PIVOT,LH,S.F.C.GRAY	O	O											
14091-0465-H8	COVER,METER,EBONY	O	O											
14091-0789-837	COVER,PIVOT,RH,S.F.C.GRAY	O	O											
32160-0131-793	FRAME-COMP,M.BRONZE	O	O											
33001-0081-793	ARM-COMP-SWING,M.BRONZE	O	O											
35004-0053-H8	FENDER-FRONT,EBONY	O	O											
35063-0285-735	STAY,STEP,LH,M.SILVER	O	O											
35063-0286-735	STAY,STEP,RH,M.SILVER	O	O											
36001-0063-6Z	COVER-SIDE,LH,F.BLACK	O	O											
36001-0064-6Z	COVER-SIDE,RH,F.BLACK	O	O											
36040-0037-H8	COVER-TAIL,LH,EBONY	O	O											
36040-0038-H8	COVER-TAIL,RH,EBONY	O	O											
36040-0039-H8	COVER-TAIL,CNT,EBONY	O	O											
41073-0051-795	WHEEL-ASSY,RR,M.F.P.SILVER	O	O											
41073-0053-795	WHEEL-ASSY,FR,M.F.P.SILVER	O	O											
41080-0103-10R	DISC,FR,GOLD+DISC-SILVER	O	O											
43080-5017-DJ	CALIPER-SUB-ASSY,FR,LH,BLACK	O	O											
43080-5028-DJ	CALIPER-SUB-ASSY,FR,RH,BLACK	O	O											
43080-5061-DJ	CALIPER-SUB-ASSY,RR,BLACK	O	O											
44005-0045-793	PIPE-LEFT FORK OUTER,M.BRONZE	O	O											
44006-0045-793	PIPE-RIGHT FORK OUTER,M.BRONZE	O	O											
44037-0050-793	HOLDER-FORK UNDER,M.BRONZE	O	O											
44039-0033-793	HOLDER-FORK UPPER,M.BRONZE	O	O											
44071-0258-793	DAMPER-ASSY,FORK,LH,M.BRONZE	O	O											
44071-0259-793	DAMPER-ASSY,FORK,RH,M.BRONZE	O	O											

’06 ER650A6S

O : Applicable ×: Not applicable

Color: Ebony (H8) **(2)**

Part No.	Description	Spec.Code UK	WV											
45014-0140-794	SHOCKABSORBER,M.GOLD	O	O											
46003-0093-458	HANDLE,P.SILVER	O	O											
46012-0010-793	HOLDER-HANDLE,UPP,M.BRONZE	O	O											
49107-0074-837	COVER-EXHAUST PIPE,S.F.C.GRAY	O	O											
49125-0018-H8	SHROUD,LH,EBONY	O	O											
49125-0019-H8	SHROUD,RH,EBONY	O	O											
51084-5138-H8	TANK-COMP-FUEL,EBONY	O	O											
53003-0058-MA	LEATHER,SEAT,BLACK	O	O											
53066-0136-MA	SEAT-ASSY,DUAL,BLACK	O	O											

’06 ER650A6S

O : Applicable ×: Not applicable

Color: Galaxy Silver Type 2 (474) **(1)**

Part No.	Description	Spec.Code												
		UK	WV											
11012-1717-10N	CAP,CROSS PIPE,P.RED	O	O											
11065-0121-796	CAP,CHAIN ADJUSTER,P.RED	O	O											
11065-0125-10N	CAP,FRAME,P.RED	O	O											
14091-0458-474	COVER,HEAD LAMP,LH,G.SILVER	O	O											
14091-0459-474	COVER,HEAD LAMP,RH,G.SILVER	O	O											
14091-0461-837	COVER,PIVOT,LH,S.F.C.GRAY	O	O											
14091-0465-474	COVER,METER,G.SILVER	O	O											
14091-0789-837	COVER,PIVOT,RH,S.F.C.GRAY	O	O											
32160-0131-796	FRAME-COMP,P.RED	O	O											
33001-0081-796	ARM-COMP-SWING,P.RED	O	O											
35004-0053-474	FENDER-FRONT,G.SILVER	O	O											
35063-0285-735	STAY,STEP,LH,M.SILVER	O	O											
35063-0286-735	STAY,STEP,RH,M.SILVER	O	O											
36001-0063-6Z	COVER-SIDE,LH,F.BLACK	O	O											
36001-0064-6Z	COVER-SIDE,RH,F.BLACK	O	O											
36040-0037-474	COVER-TAIL,LH,G.SILVER	O	O											
36040-0038-474	COVER-TAIL,RH,G.SILVER	O	O											
36040-0039-474	COVER-TAIL,CNT,G.SILVER	O	O											
41073-0051-795	WHEEL-ASSY,RR,M.F.P.SILVER	O	O											
41073-0053-795	WHEEL-ASSY,FR,M.F.P.SILVER	O	O											
41080-0103-10R	DISC,FR,GOLD+DISC-SILVER	O	O											
43080-5017-DJ	CALIPER-SUB-ASSY,FR,LH,BLACK	O	O											
43080-5028-DJ	CALIPER-SUB-ASSY,FR,RH,BLACK	O	O											
43080-5061-DJ	CALIPER-SUB-ASSY,RR,BLACK	O	O											
44005-0045-796	PIPE-LEFT FORK OUTER,P.RED	O	O											
44006-0045-796	PIPE-RIGHT FORK OUTER,P.RED	O	O											
44037-0050-796	HOLDER-FORK UNDER,P.RED	O	O											
44039-0033-796	HOLDER-FORK UPPER,P.RED	O	O											
44071-0258-796	DAMPER-ASSY,FORK,LH,P.RED	O	O											
44071-0259-796	DAMPER-ASSY,FORK,RH,P.RED	O	O											

’06 ER650A6S

O : Applicable ×: Not applicable

Color: Galaxy Silver Type 2 (474) (2)

Part No.	Description	Spec.Code UK	WV											
45014-0140-796	SHOCKABSORBER,P.RED	O	O											
46003-0093-458	HANDLE,P.SILVER	O	O											
46012-0010-796	HOLDER-HANDLE,UPP,P.RED	O	O											
49107-0074-837	COVER-EXHAUST PIPE,S.F.C.GRAY	O	O											
49125-0018-474	SHROUD,LH,G.SILVER	O	O											
49125-0019-474	SHROUD,RH,G.SILVER	O	O											
51084-5139-474	TANK-COMP-FUEL,G.SILVER	O	O											
53003-0058-MA	LEATHER,SEAT,BLACK	O	O											
53066-0136-MA	SEAT-ASSY,DUAL,BLACK	O	O											

’06 ER650A6S

O : Applicable ×: Not applicable

Color: Vivid Yellow (789) **(1)**

Part No.	Description	Spec.Code												
		UK	WV											
11012-1717-10M	CAP,CROSS PIPE,M.BRONZE	O	O											
11065-0121-793	CAP,CHAIN ADJUSTER,M.BRONZE	O	O											
11065-0125-10M	CAP,FRAME,M.BRONZE	O	O											
14091-0458-789	COVER,HEAD LAMP,LH,V.YELLOW	O	O											
14091-0459-789	COVER,HEAD LAMP,RH,V.YELLOW	O	O											
14091-0461-837	COVER,PIVOT,LH,S.F.C.GRAY	O	O											
14091-0465-789	COVER,METER,V.YELLOW	O	O											
14091-0789-837	COVER,PIVOT,RH,S.F.C.GRAY	O	O											
32160-0131-793	FRAME-COMP,M.BRONZE	O	O											
33001-0081-793	ARM-COMP-SWING,M.BRONZE	O	O											
35004-0053-789	FENDER-FRONT,V.YELLOW	O	O											
35063-0285-735	STAY,STEP,LH,M.SILVER	O	O											
35063-0286-735	STAY,STEP,RH,M.SILVER	O	O											
36001-0063-6Z	COVER-SIDE,LH,F.BLACK	O	O											
36001-0064-6Z	COVER-SIDE,RH,F.BLACK	O	O											
36040-0037-789	COVER-TAIL,LH,V.YELLOW	O	O											
36040-0038-789	COVER-TAIL,RH,V.YELLOW	O	O											
36040-0039-789	COVER-TAIL,CNT,V.YELLOW	O	O											
41073-0051-795	WHEEL-ASSY,RR,M.F.P.SILVER	O	O											
41073-0053-795	WHEEL-ASSY,FR,M.F.P.SILVER	O	O											
41080-0103-10R	DISC,FR,GOLD+DISC-SILVER	O	O											
43080-5017-DJ	CALIPER-SUB-ASSY,FR,LH,BLACK	O	O											
43080-5028-DJ	CALIPER-SUB-ASSY,FR,RH,BLACK	O	O											
43080-5061-DJ	CALIPER-SUB-ASSY,RR,BLACK	O	O											
44005-0045-793	PIPE-LEFT FORK OUTER,M.BRONZE	O	O											
44006-0045-793	PIPE-RIGHT FORK OUTER,M.BRONZE	O	O											
44037-0050-793	HOLDER-FORK UNDER,M.BRONZE	O	O											
44039-0033-793	HOLDER-FORK UPPER,M.BRONZE	O	O											
44071-0258-793	DAMPER-ASSY,FORK,LH,M.BRONZE	O	O											
44071-0259-793	DAMPER-ASSY,FORK,RH,M.BRONZE	O	O											

’06 ER650A6S

O : Applicable ×: Not applicable

Color: Vivid Yellow (789) **(2)**

Part No.	Description	Spec.Code UK	WV											
45014-0140-794	SHOCKABSORBER,M.GOLD	O	O											
46003-0093-458	HANDLE,P.SILVER	O	O											
46012-0010-793	HOLDER-HANDLE,UPP,M.BRONZE	O	O											
49107-0074-837	COVER-EXHAUST PIPE,S.F.C.GRAY	O	O											
49125-0018-789	SHROUD,LH,V.YELLOW	O	O											
49125-0019-789	SHROUD,RH,V.YELLOW	O	O											
51084-5140-789	TANK-COMP-FUEL,V.YELLOW	O	O											
53003-0058-MA	LEATHER,SEAT,BLACK	O	O											
53066-0136-MA	SEAT-ASSY,DUAL,BLACK	O	O											
56019-108-789	PAINT,1/12L,V.YELLOW	O	O											

’07 ER650A7F

O : Applicable ×: Not applicable

Color: Galaxy Silver Type 2 (474) **(1)**

Part No.	Description	Spec.Code UK	WV											
11012-1717-10N	CAP,CROSS PIPE,P.RED	O	O											
11065-0121-796	CAP,CHAIN ADJUSTER,P.RED	O	O											
11065-0125-10N	CAP,FRAME,P.RED	O	O											
14091-0458-474	COVER,HEAD LAMP,LH,G.SILVER	O	O											
14091-0459-474	COVER,HEAD LAMP,RH,G.SILVER	O	O											
14091-0461-837	COVER,PIVOT,LH,S.F.C.GRAY	O	O											
14091-0465-474	COVER,METER,G.SILVER	O	O											
14091-0789-837	COVER,PIVOT,RH,S.F.C.GRAY	O	O											
32160-0131-796	FRAME-COMP,P.RED	O	O											
33001-0081-796	ARM-COMP-SWING,P.RED	O	O											
35004-0053-474	FENDER-FRONT,G.SILVER	O	O											
35063-0285-735	STAY,STEP,LH,M.SILVER	O	O											
35063-0286-735	STAY,STEP,RH,M.SILVER	O	O											
36001-0063-6Z	COVER-SIDE,LH,F.BLACK	O	O											
36001-0064-6Z	COVER-SIDE,RH,F.BLACK	O	O											
36040-0037-474	COVER-TAIL,LH,G.SILVER	O	O											
36040-0038-474	COVER-TAIL,RH,G.SILVER	O	O											
36040-0039-474	COVER-TAIL,CNT,G.SILVER	O	O											
41073-0051-795	WHEEL-ASSY,RR,M.F.P.SILVER	O	O											
41073-0053-795	WHEEL-ASSY,FR,M.F.P.SILVER	O	O											
41080-0103-11I	DISC,FR,BLACK+DISC SILVER	O	O											
43080-5017-DJ	CALIPER-SUB-ASSY,FR,LH,BLACK	O	O											
43080-5028-DJ	CALIPER-SUB-ASSY,FR,RH,BLACK	O	O											
43080-5061-DJ	CALIPER-SUB-ASSY,RR,BLACK	O	O											
44005-0045-796	PIPE-LEFT FORK OUTER,P.RED	O	O											
44006-0045-796	PIPE-RIGHT FORK OUTER,P.RED	O	O											
44037-0050-796	HOLDER-FORK UNDER,P.RED	O	O											
44039-0033-796	HOLDER-FORK UPPER,P.RED	O	O											
44071-0258-796	DAMPER-ASSY,FORK,LH,P.RED	O	O											
44071-0259-796	DAMPER-ASSY,FORK,RH,P.RED	O	O											

’07 ER650A7F

O : Applicable ×: Not applicable

Color: Galaxy Silver Type 2 (474) **(2)**

Part No.	Description	Spec.Code UK	WV											
45014-0140-796	SHOCKABSORBER,P.RED	O	O											
46003-0093-458	HANDLE,P.SILVER	O	O											
46012-0010-796	HOLDER-HANDLE,UPP,P.RED	O	O											
49107-0074-837	COVER-EXHAUST PIPE,S.F.C.GRAY	O	O											
49125-0018-474	SHROUD,LH,G.SILVER	O	O											
49125-0019-474	SHROUD,RH,G.SILVER	O	O											
51084-5139-474	TANK-COMP-FUEL,G.SILVER	O	O											
53003-0058-MA	LEATHER,SEAT,BLACK	O	O											
53066-0136-MA	SEAT-ASSY,DUAL,BLACK	O	O											
56019-108-474	PAINT,1/12L,G.SILVER	O	O											

’07 ER650A7F

O : Applicable ×: Not applicable

Color: Metallic Diablo Black (17K) (1)

Part No.	Description	Spec.Code UK	WV											
11012-1717-10N	CAP,CROSS PIPE,P.RED	O	O											
11065-0121-796	CAP,CHAIN ADJUSTER,P.RED	O	O											
11065-0125-10N	CAP,FRAME,P.RED	O	O											
14091-0458-17K	COVER,HEAD LAMP,LH,M.BLACK	O	O											
14091-0459-17K	COVER,HEAD LAMP,RH,M.BLACK	O	O											
14091-0461-837	COVER,PIVOT,LH,S.F.C.GRAY	O	O											
14091-0465-17K	COVER,METER,M.BLACK	O	O											
14091-0789-837	COVER,PIVOT,RH,S.F.C.GRAY	O	O											
32160-0131-796	FRAME-COMP,P.RED	O	O											
33001-0081-796	ARM-COMP-SWING,P.RED	O	O											
35004-0053-17K	FENDER-FRONT,M.BLACK	O	O											
35063-0285-735	STAY,STEP,LH,M.SILVER	O	O											
35063-0286-735	STAY,STEP,RH,M.SILVER	O	O											
36001-0063-6Z	COVER-SIDE,LH,F.BLACK	O	O											
36001-0064-6Z	COVER-SIDE,RH,F.BLACK	O	O											
36040-0037-17K	COVER-TAIL,LH,M.BLACK	O	O											
36040-0038-17K	COVER-TAIL,RH,M.BLACK	O	O											
36040-0039-17K	COVER-TAIL,CNT,M.BLACK	O	O											
41073-0051-795	WHEEL-ASSY,RR,M.F.P.SILVER	O	O											
41073-0053-795	WHEEL-ASSY,FR,M.F.P.SILVER	O	O											
41080-0103-11I	DISC,FR,BLACK+DISC SILVER	O	O											
43080-5017-DJ	CALIPER-SUB-ASSY,FR,LH,BLACK	O	O											
43080-5028-DJ	CALIPER-SUB-ASSY,FR,RH,BLACK	O	O											
43080-5061-DJ	CALIPER-SUB-ASSY,RR,BLACK	O	O											
44005-0045-796	PIPE-LEFT FORK OUTER,P.RED	O	O											
44006-0045-796	PIPE-RIGHT FORK OUTER,P.RED	O	O											
44037-0050-796	HOLDER-FORK UNDER,P.RED	O	O											
44039-0033-796	HOLDER-FORK UPPER,P.RED	O	O											
44071-0258-796	DAMPER-ASSY,FORK,LH,P.RED	O	O											
44071-0259-796	DAMPER-ASSY,FORK,RH,P.RED	O	O											

’07 ER650A7F

O : Applicable ×: Not applicable

Color: Metallic Diablo Black (17K) (2)

Part No.	Description	Spec.Code UK	WV											
45014-0140-796	SHOCKABSORBER,P.RED	O	O											
46003-0093-458	HANDLE,P.SILVER	O	O											
46012-0010-796	HOLDER-HANDLE,UPP,P.RED	O	O											
49107-0074-837	COVER-EXHAUST PIPE,S.F.C.GRAY	O	O											
49125-0018-17K	SHROUD,LH,M.BLACK	O	O											
49125-0019-17K	SHROUD,RH,M.BLACK	O	O											
51084-5138-17K	TANK-COMP-FUEL,M.BLACK	O	O											
53003-0058-MA	LEATHER,SEAT,BLACK	O	O											
53066-0136-MA	SEAT-ASSY,DUAL,BLACK	O	O											

’07 ER650A7F

O : Applicable ×: Not applicable

Color: Pearl Wildfire Orange (17H) (1)

Part No.	Description	Spec.Code UK	WV											
11012-1717-11J	CAP,CROSS PIPE,F.S.BLACK	O	O											
11065-0121-11E	CAP,CHAIN ADJUSTER,F.S.BLACK	O	O											
11065-0125-11J	CAP,FRAME,F.S.BLACK	O	O											
14091-0458-17H	COVER,HEAD LAMP,LH,P.ORANGE	O	O											
14091-0459-17H	COVER,HEAD LAMP,RH,P.ORANGE	O	O											
14091-0461-837	COVER,PIVOT,LH,S.F.C.GRAY	O	O											
14091-0465-17H	COVER,METER,P.ORANGE	O	O											
14091-0789-837	COVER,PIVOT,RH,S.F.C.GRAY	O	O											
32160-0131-11E	FRAME-COMP,F.S.BLACK	O	O											
33001-0081-11E	ARM-COMP-SWING,F.S.BLACK	O	O											
35004-0053-17H	FENDER-FRONT,P.ORANGE	O	O											
35063-0285-735	STAY,STEP,LH,M.SILVER	O	O											
35063-0286-735	STAY,STEP,RH,M.SILVER	O	O											
36001-0063-6Z	COVER-SIDE,LH,F.BLACK	O	O											
36001-0064-6Z	COVER-SIDE,RH,F.BLACK	O	O											
36040-0037-17H	COVER-TAIL,LH,P.ORANGE	O	O											
36040-0038-17H	COVER-TAIL,RH,P.ORANGE	O	O											
36040-0039-17H	COVER-TAIL,CNT,P.ORANGE	O	O											
41073-0051-R2	WHEEL-ASSY,RR,BLACK	O	O											
41073-0053-R2	WHEEL-ASSY,FR,BLACK	O	O											
41080-0103-11I	DISC,FR,BLACK+DISC SILVER	O	O											
43080-5017-DJ	CALIPER-SUB-ASSY,FR,LH,BLACK	O	O											
43080-5028-DJ	CALIPER-SUB-ASSY,FR,RH,BLACK	O	O											
43080-5061-DJ	CALIPER-SUB-ASSY,RR,BLACK	O	O											
44005-0045-11E	PIPE-LEFT FORK OUTER,F.S.BLACK	O	O											
44006-0045-11E	PIPE-RIGHT FORK OUTER,BLACK	O	O											
44037-0050-11E	HOLDER-FORK UNDER,F.S.BLACK	O	O											
44039-0033-11E	HOLDER-FORK UPPER,F.S.BLACK	O	O											
44071-0258-11E	DAMPER-ASSY,FORK,LH,F.S.BLACK	O	O											
44071-0259-11E	DAMPER-ASSY,FORK,RH,F.S.BLACK	O	O											

’07 ER650A7F

O : Applicable ×: Not applicable

Color: Pearl Wildfire Orange (17H) (2)

Part No.	Description	Spec.Code UK	WV											
45014-0140-458	SHOCKABSORBER,P.SILVER	O	O											
46003-0093-718	HANDLE,BLACK	O	O											
46012-0010-11E	HOLDER-HANDLE,UPP,F.S.BLACK	O	O											
49107-0074-837	COVER-EXHAUST PIPE,S.F.C.GRAY	O	O											
49125-0018-17H	SHROUD,LH,P.ORANGE	O	O											
49125-0019-17H	SHROUD,RH,P.ORANGE	O	O											
51084-5140-17H	TANK-COMP-FUEL,P.ORANGE	O	O											
53003-0058-MA	LEATHER,SEAT,BLACK	O	O											
53066-0136-MA	SEAT-ASSY,DUAL,BLACK	O	O											

’08 ER650A8F

O : Applicable ×: Not applicable

Color: KMT.Candy Lime Green (15P) **(1)**

Part No.	Description	Spec.Code												
		UK	WV											
11012-1717-18T	CAP,CROSS PIPE,BLACK	O	O											
11065-0121-18R	CAP,CHAIN ADJUSTER,BLACK	O	O											
11065-0125-18T	CAP,FRAME,BLACK	O	O											
14091-0458-15P	COVER,HEAD LAMP,LH,C.L.GREEN	O	O											
14091-0459-15P	COVER,HEAD LAMP,RH,C.L.GREEN	O	O											
14091-0461-6Z	COVER,PIVOT,LH,F.BLACK	O	O											
14091-0465-15P	COVER,METER,C.L.GREEN	O	O											
14091-0789-6Z	COVER,PIVOT,RH,F.BLACK	O	O											
32160-0268-18R	FRAME-COMP,BLACK	O	O											
33001-0081-18R	ARM-COMP-SWING,BLACK	O	O											
35004-0053-15P	FENDER-FRONT,C.L.GREEN	O	O											
35063-0285-18R	STAY,STEP,LH,BLACK	O	O											
35063-0286-18R	STAY,STEP,RH,BLACK	O	O											
36001-0063-6Z	COVER-SIDE,LH,F.BLACK	O	O											
36001-0064-6Z	COVER-SIDE,RH,F.BLACK	O	O											
36040-0037-15P	COVER-TAIL,LH,C.L.GREEN	O	O											
36040-0038-15P	COVER-TAIL,RH,C.L.GREEN	O	O											
36040-0039-15P	COVER-TAIL,CNT,C.L.GREEN	O	O											
41073-0051-R2	WHEEL-ASSY,RR,BLACK	O	O											
41073-0053-R2	WHEEL-ASSY,FR,BLACK	O	O											
41080-0103-11I	DISC,FR,BLACK+DISC SILVER	O	O											
43080-5017-DJ	CALIPER-SUB-ASSY,FR,LH,BLACK	O	O											
43080-5028-DJ	CALIPER-SUB-ASSY,FR,RH,BLACK	O	O											
43080-5061-DJ	CALIPER-SUB-ASSY,RR,BLACK	O	O											
44005-0045-18R	PIPE-LEFT FORK OUTER,BLACK	O	O											
44006-0045-18R	PIPE-RIGHT FORK OUTER,BLACK	O	O											
44037-0050-18R	HOLDER-FORK UNDER,BLACK	O	O											
44039-0033-18R	HOLDER-FORK UPPER,BLACK	O	O											
44071-0258-18R	DAMPER-ASSY,FORK,LH,BLACK	O	O											
44071-0259-18R	DAMPER-ASSY,FORK,RH,BLACK	O	O											

’08 ER650A8F

O : Applicable ×: Not applicable

Color: KMT.Candy Lime Green (15P) (2)

Part No.	Description	Spec.Code UK	WV											
45014-0140-458	SHOCKABSORBER,P.SILVER	O	O											
46003-0093-10	HANDLE,BLACK	O	O											
46012-0047-18R	HOLDER-HANDLE,UPP,BLACK	O	O											
49107-0074-837	COVER-EXHAUST PIPE,S.F.C.GRAY	O	O											
49125-0018-15P	SHROUD,LH,C.L.GREEN	O	O											
49125-0019-15P	SHROUD,RH,C.L.GREEN	O	O											
51085-5363-15P	TANK-COMP-FUEL,C.L.GREEN	O	O											
53003-0058-MA	LEATHER,SEAT,BLACK	O	O											
53066-0136-MA	SEAT-ASSY,DUAL,BLACK	O	O											

’08 ER650A8F

O : Applicable ×: Not applicable

Color: KMT.Candy Plasma Blue (15D) (1)

Part No.	Description	Spec.Code												
		UK	WV											
11012-1717-458	CAP,CROSS PIPE,P.SILVER	O	O											
11065-0121-458	CAP,CHAIN ADJUSTER,P.SILVER	O	O											
11065-0125-458	CAP,FRAME,P.SILVER	O	O											
14091-0458-15D	COVER,HEAD LAMP,LH,C.P.BLUE	O	O											
14091-0459-15D	COVER,HEAD LAMP,RH,C.P.BLUE	O	O											
14091-0461-6Z	COVER,PIVOT,LH,F.BLACK	O	O											
14091-0465-15D	COVER,METER,C.P.BLUE	O	O											
14091-0789-6Z	COVER,PIVOT,RH,F.BLACK	O	O											
32160-0268-458	FRAME-COMP,P.SILVER	O	O											
33001-0081-458	ARM-COMP-SWING,P.SILVER	O	O											
35004-0053-15D	FENDER-FRONT,C.P.BLUE	O	O											
35063-0285-458	STAY,STEP,LH,P.SILVER	O	O											
35063-0286-458	STAY,STEP,RH,P.SILVER	O	O											
36001-0063-6Z	COVER-SIDE,LH,F.BLACK	O	O											
36001-0064-6Z	COVER-SIDE,RH,F.BLACK	O	O											
36040-0037-15D	COVER-TAIL,LH,C.P.BLUE	O	O											
36040-0038-15D	COVER-TAIL,RH,C.P.BLUE	O	O											
36040-0039-15D	COVER-TAIL,CNT,C.P.BLUE	O	O											
41073-0051-795	WHEEL-ASSY,RR,M.F.P.SILVER	O	O											
41073-0053-795	WHEEL-ASSY,FR,M.F.P.SILVER	O	O											
41080-0103-11I	DISC,FR,BLACK+DISC SILVER	O	O											
43080-5017-DJ	CALIPER-SUB-ASSY,FR,LH,BLACK	O	O											
43080-5028-DJ	CALIPER-SUB-ASSY,FR,RH,BLACK	O	O											
43080-5061-DJ	CALIPER-SUB-ASSY,RR,BLACK	O	O											
44005-0045-458	PIPE-LEFT FORK OUTER,P.SILVER	O	O											
44006-0045-458	PIPE-RIGHT FORK OUTER,P.SILVER	O	O											
44037-0050-458	HOLDER-FORK UNDER,P.SILVER	O	O											
44039-0033-458	HOLDER-FORK UPPER,P.SILVER	O	O											
44071-0258-458	DAMPER-ASSY,FORK,LH,P.SILVER	O	O											
44071-0259-458	DAMPER-ASSY,FORK,RH,P.SILVER	O	O											

’08 ER650A8F

O : Applicable ×: Not applicable

Color: KMT.Candy Plasma Blue (15D) (2)

Part No.	Description	Spec.Code UK	WV											
45014-0140-458	SHOCKABSORBER,P.SILVER	O	O											
46003-0093-458	HANDLE,P.SILVER	O	O											
46012-0047-458	HOLDER-HANDLE,UPP,P.SILVER	O	O											
49107-0074-837	COVER-EXHAUST PIPE,S.F.C.GRAY	O	O											
49125-0018-15D	SHROUD,LH,C.P.BLUE	O	O											
49125-0019-15D	SHROUD,RH,C.P.BLUE	O	O											
51085-5365-15D	TANK-COMP-FUEL,C.P.BLUE	O	O											
53003-0058-MA	LEATHER,SEAT,BLACK	O	O											
53066-0136-MA	SEAT-ASSY,DUAL,BLACK	O	O											

’08 ER650A8F

O : Applicable ×: Not applicable

Color: KMT.Metallic Diablo Black (15Q) (1)

Part No.	Description	Spec.Code												
		UK	WV											
11012-1717-18T	CAP,CROSS PIPE,BLACK	O	O											
11065-0121-18R	CAP,CHAIN ADJUSTER,BLACK	O	O											
11065-0125-18T	CAP,FRAME,BLACK	O	O											
14091-0458-15Q	COVER,HEAD LAMP,LH,M.D.BLACK	O	O											
14091-0459-15Q	COVER,HEAD LAMP,RH,M.D.BLACK	O	O											
14091-0461-6Z	COVER,PIVOT,LH,F.BLACK	O	O											
14091-0465-15Q	COVER,METER,M.D.BLACK	O	O											
14091-0789-6Z	COVER,PIVOT,RH,F.BLACK	O	O											
32160-0268-18R	FRAME-COMP,BLACK	O	O											
33001-0081-18R	ARM-COMP-SWING,BLACK	O	O											
35004-0053-15Q	FENDER-FRONT,M.D.BLACK	O	O											
35063-0285-18R	STAY,STEP,LH,BLACK	O	O											
35063-0286-18R	STAY,STEP,RH,BLACK	O	O											
36001-0063-6Z	COVER-SIDE,LH,F.BLACK	O	O											
36001-0064-6Z	COVER-SIDE,RH,F.BLACK	O	O											
36040-0037-15Q	COVER-TAIL,LH,M.D.BLACK	O	O											
36040-0038-15Q	COVER-TAIL,RH,M.D.BLACK	O	O											
36040-0039-15Q	COVER-TAIL,CNT,M.D.BLACK	O	O											
41073-0051-R2	WHEEL-ASSY,RR,BLACK	O	O											
41073-0053-R2	WHEEL-ASSY,FR,BLACK	O	O											
41080-0103-11I	DISC,FR,BLACK+DISC SILVER	O	O											
43080-5017-DJ	CALIPER-SUB-ASSY,FR,LH,BLACK	O	O											
43080-5028-DJ	CALIPER-SUB-ASSY,FR,RH,BLACK	O	O											
43080-5061-DJ	CALIPER-SUB-ASSY,RR,BLACK	O	O											
44005-0045-18R	PIPE-LEFT FORK OUTER,BLACK	O	O											
44006-0045-18R	PIPE-RIGHT FORK OUTER,BLACK	O	O											
44037-0050-18R	HOLDER-FORK UNDER,BLACK	O	O											
44039-0033-18R	HOLDER-FORK UPPER,BLACK	O	O											
44071-0258-18R	DAMPER-ASSY,FORK,LH,BLACK	O	O											
44071-0259-18R	DAMPER-ASSY,FORK,RH,BLACK	O	O											

’08 ER650A8F

O : Applicable ×: Not applicable

Color: KMT.Metallic Diablo Black (15Q) (2)

Part No.	Description	Spec.Code UK	WV											
45014-0140-458	SHOCKABSORBER,P.SILVER	O	O											
46003-0093-10	HANDLE,BLACK	O	O											
46012-0047-18R	HOLDER-HANDLE,UPP,BLACK	O	O											
49107-0074-837	COVER-EXHAUST PIPE,S.F.C.GRAY	O	O											
49125-0018-15Q	SHROUD,LH,M.D.BLACK	O	O											
49125-0019-15Q	SHROUD,RH,M.D.BLACK	O	O											
51085-5365-15Q	TANK-COMP-FUEL,M.D.BLACK	O	O											
53003-0058-MA	LEATHER,SEAT,BLACK	O	O											
53066-0136-MA	SEAT-ASSY,DUAL,BLACK	O	O											

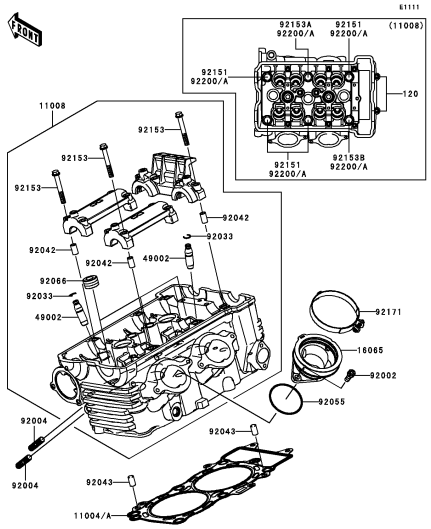

B-3 **Cylinder Head**

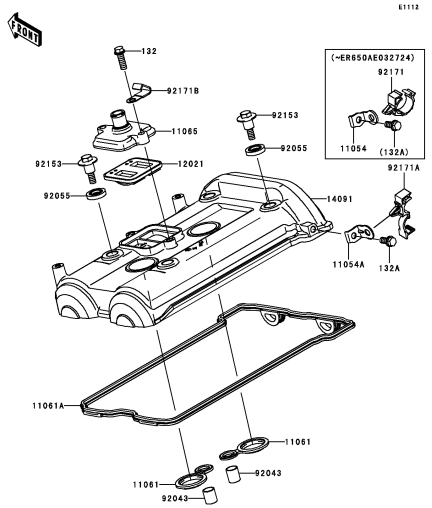

B-4 **Cylinder Head Cover**

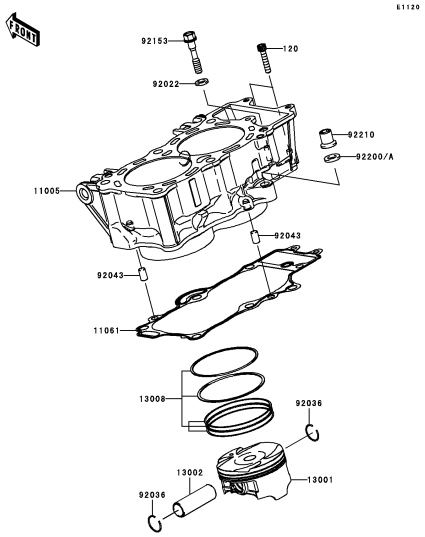

B-5 **Cylinder/Piston(s)**

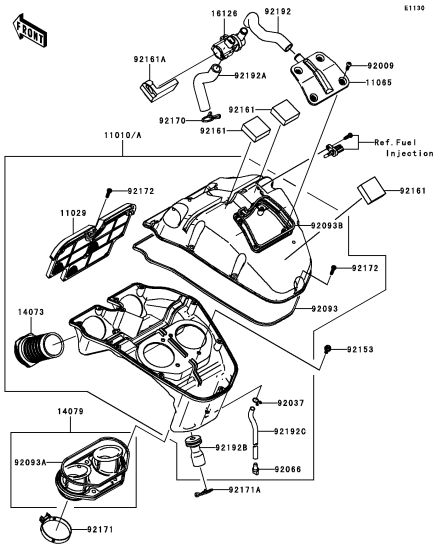

B-6 **Air Cleaner**

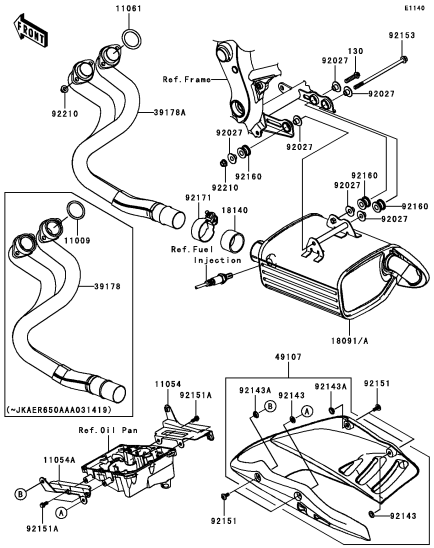

B-7 **Muffler(s)**

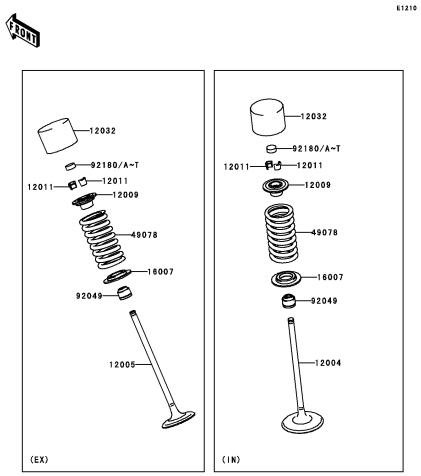

B-8 **Valve(s)**

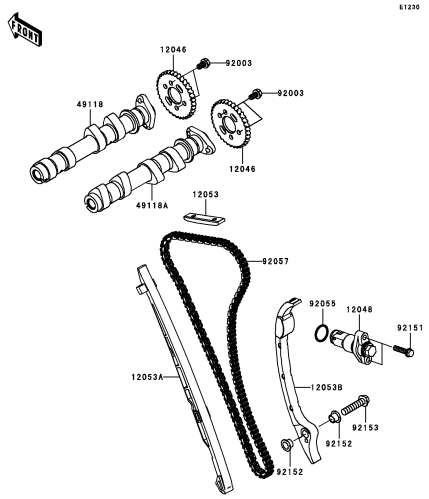

B-9 **Camshaft(s)/Tensioner**

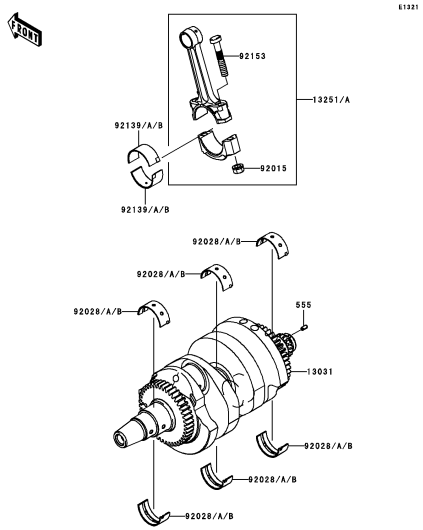

B-10 **Crankshaft**

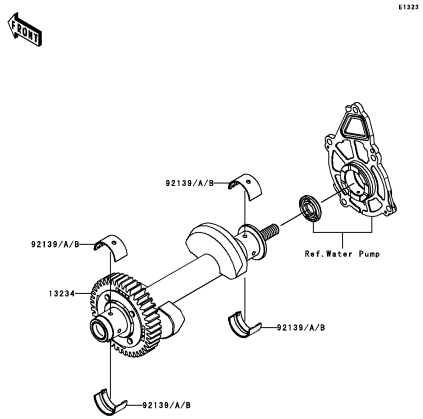

B-11 **Balancer**

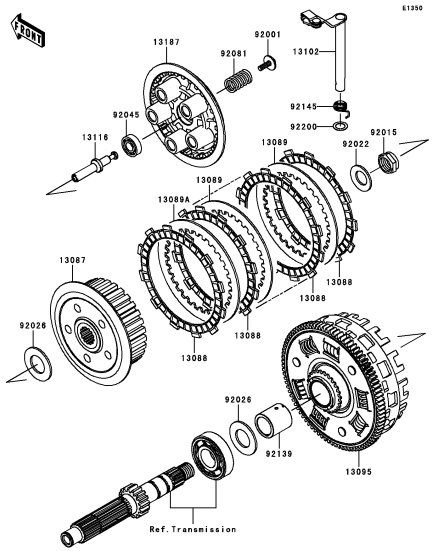

B-12 **Clutch**

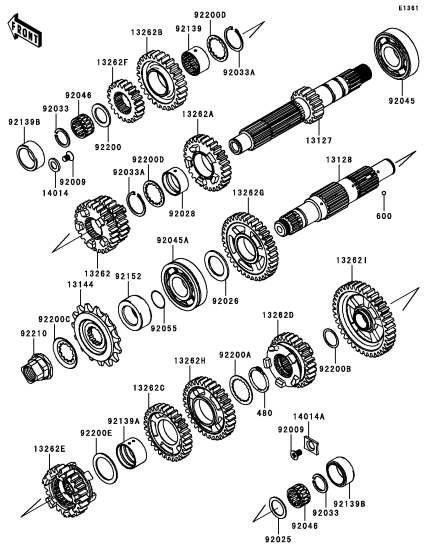

B-13 **Transmission**

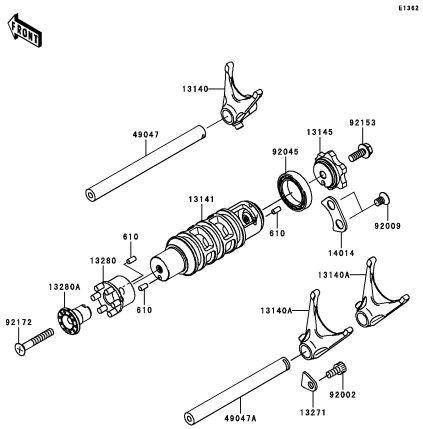

B-14 **Gear Change Drum/Shift Fork(s)**

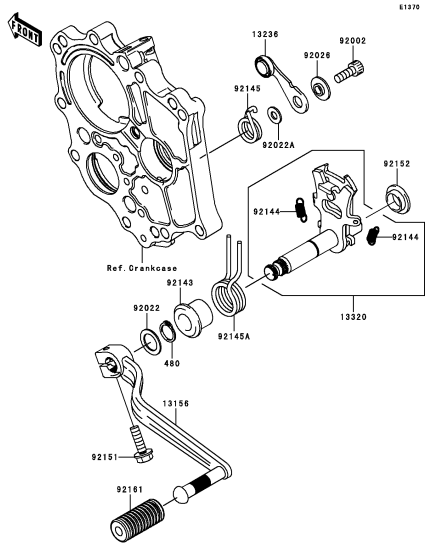

C-3 **Gear Change Mechanism**

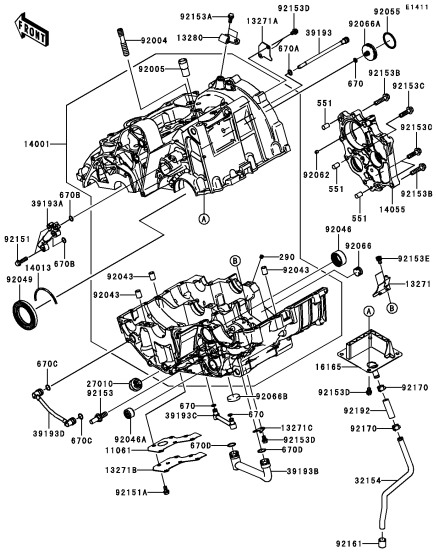

C-4 **Crankcase(1/2)(～ER650AE057323)**

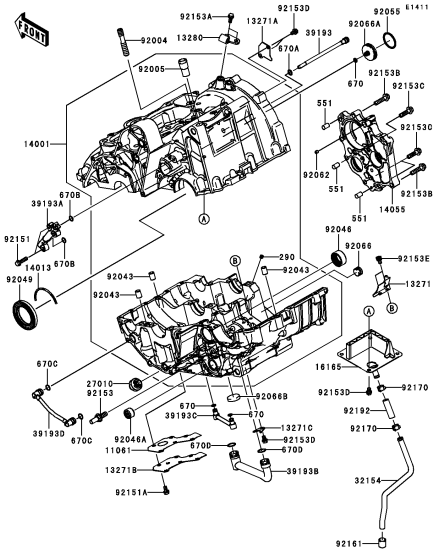

C-5 **Crankcase(2/2)(～ER650AE057323)**

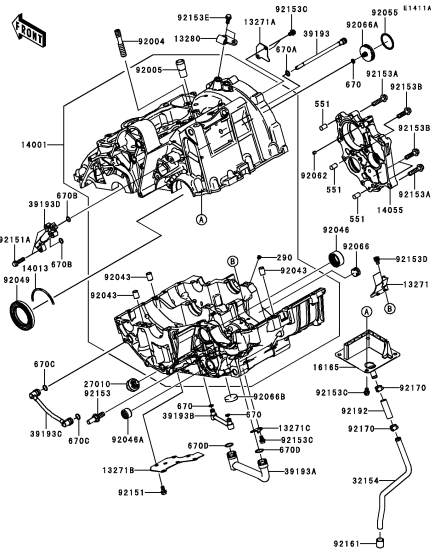

C-6 **Crankcase(1/2)(ER650AE057324～)**

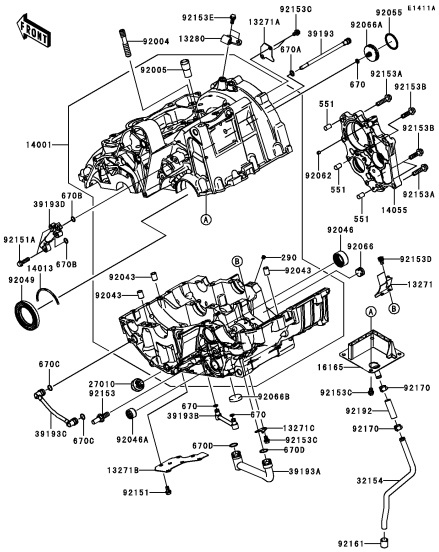

C-7 **Crankcase(2/2)(ER650AE057324～)**

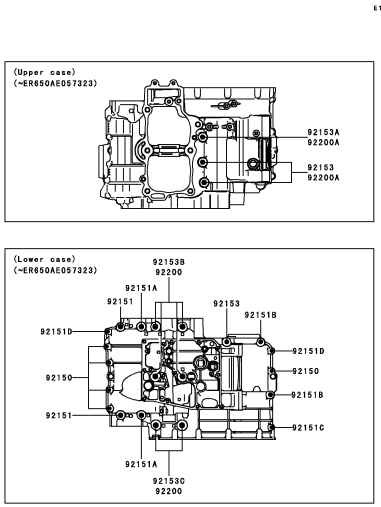

C-8 **Crankcase Bolt Pattern**

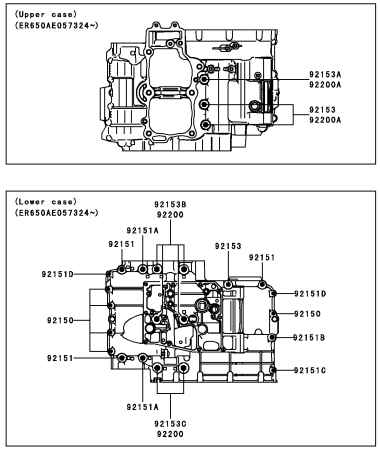

C-9 **Crankcase Bolt Pattern**

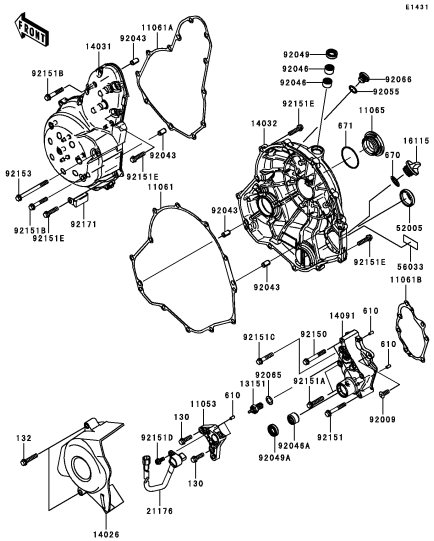

C-10 **Engine Cover(s)**

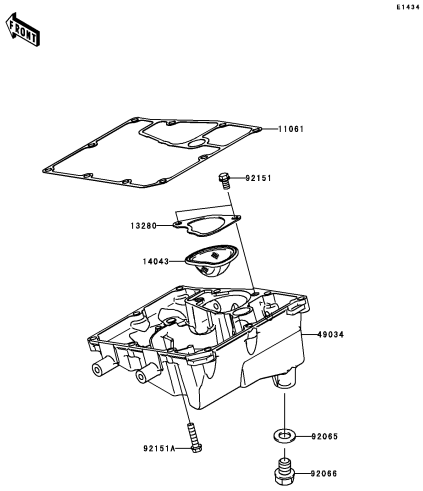

C-11 **Oil Pan**

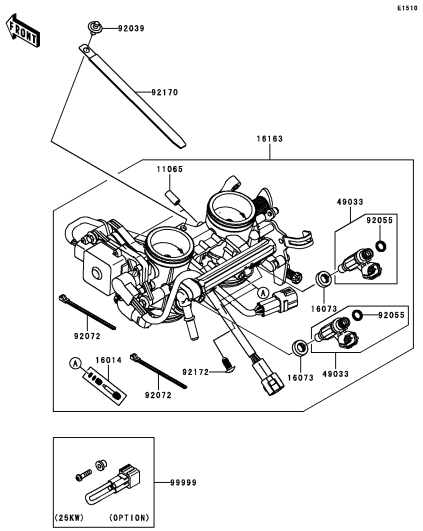

C-12 **Throttle**

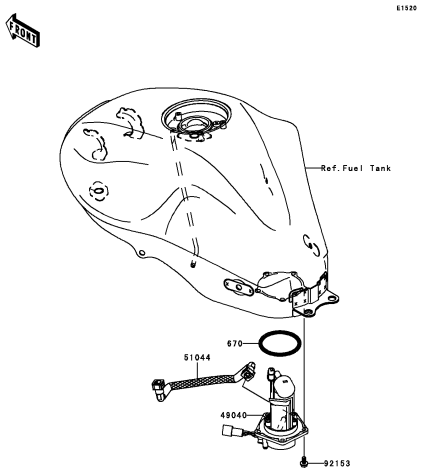

C-13 **Fuel Pump**

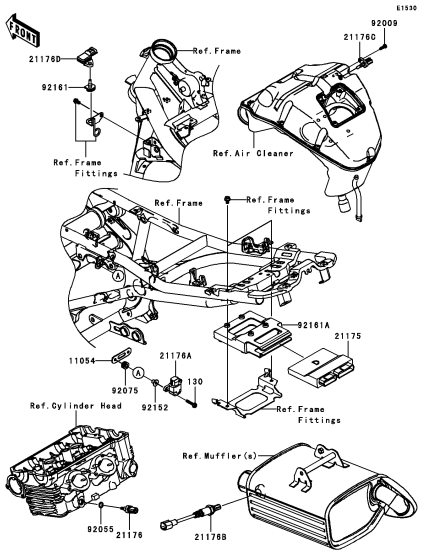

C-14 **Fuel Injection**

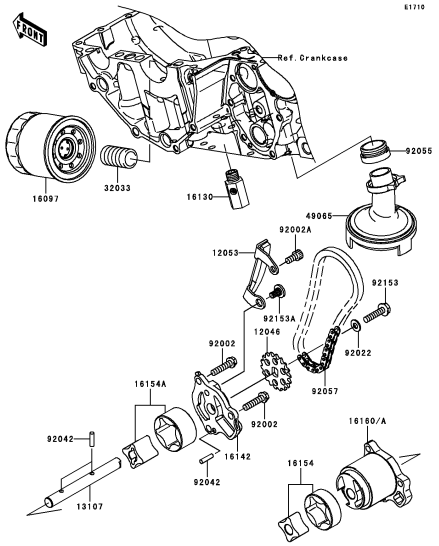

D-3 **Oil Pump**

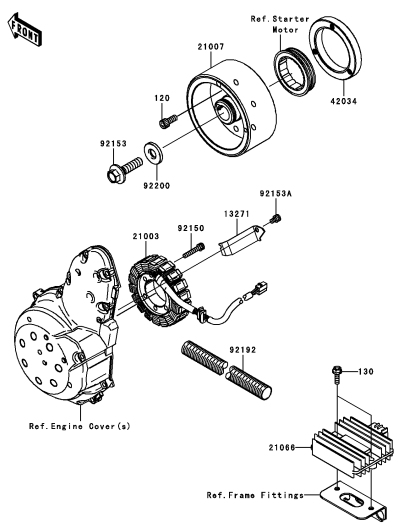

D-4 **Generator**

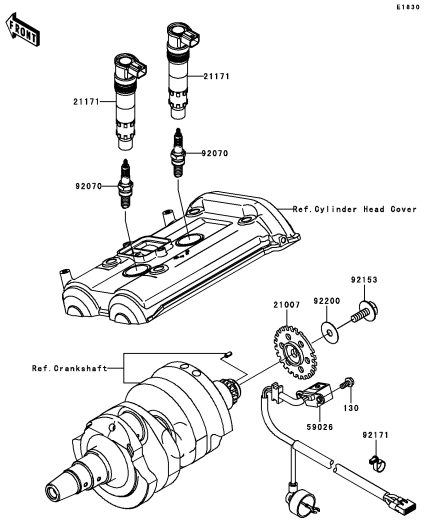

D-5 **Ignition System**

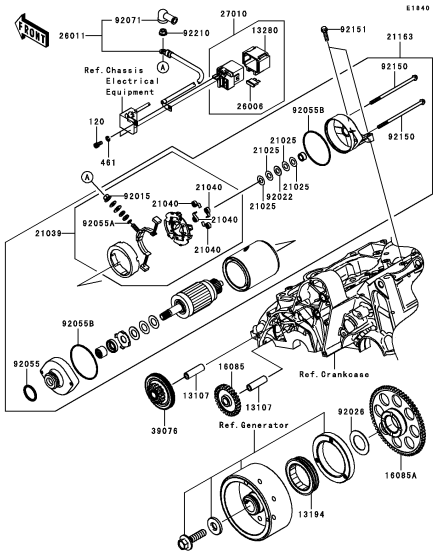

D-6 **Starter Motor(～ER650AE046804)**

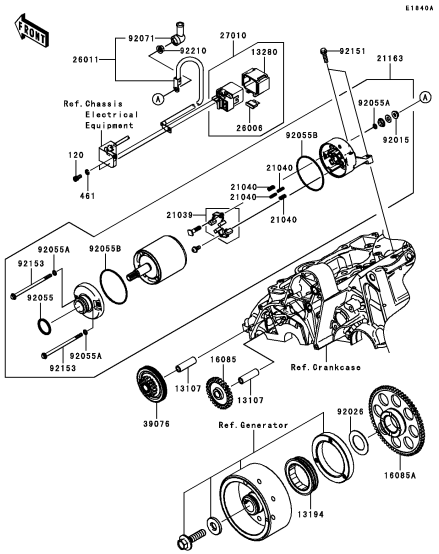

D-7 **Starter Motor(ER650AE046805～)**

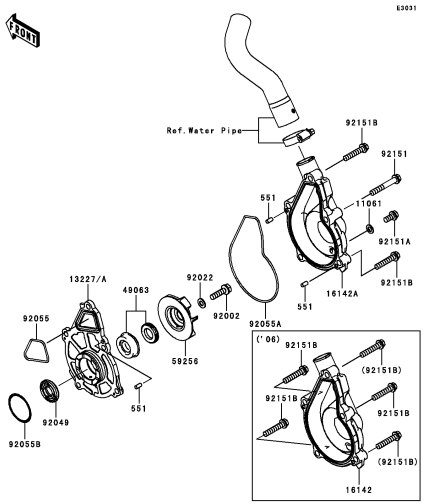

D-8 **Water Pump**

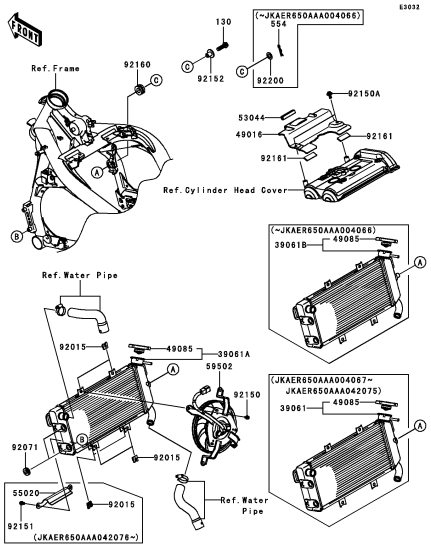

D-9 **Radiator**

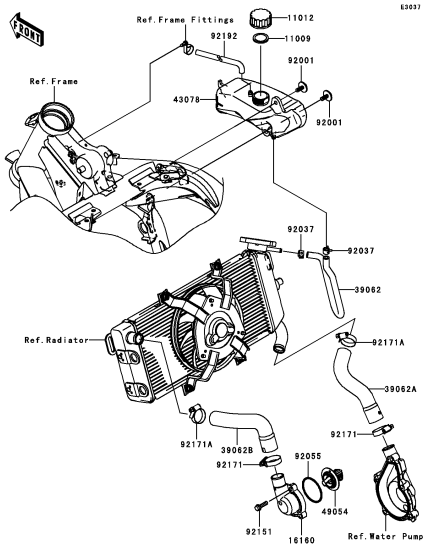

D-10 **Water Pipe**

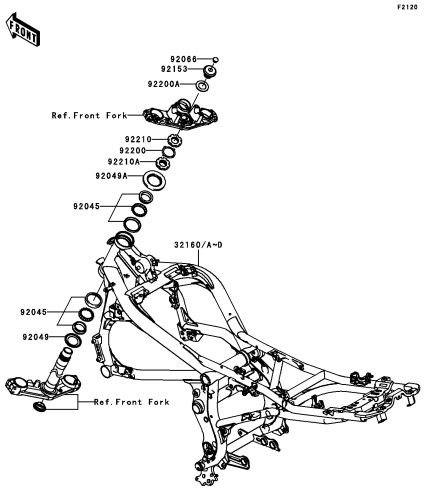

E-3 **Frame**

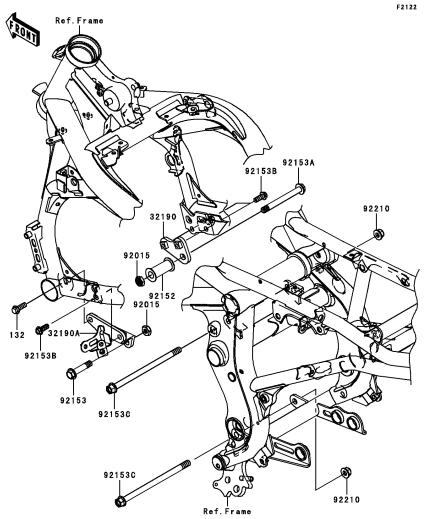

E-4 **Engine Mount**

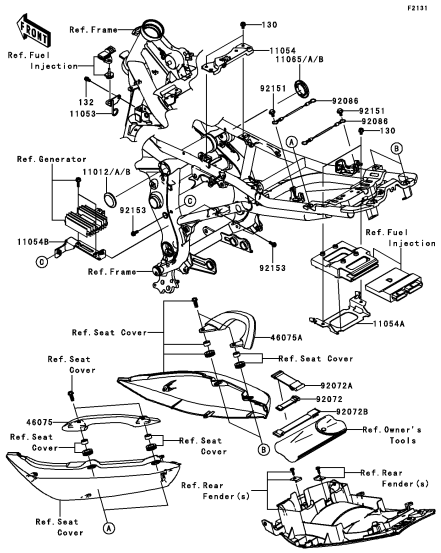

E-5 **Frame Fittings(～JKAER650AAA035082)**

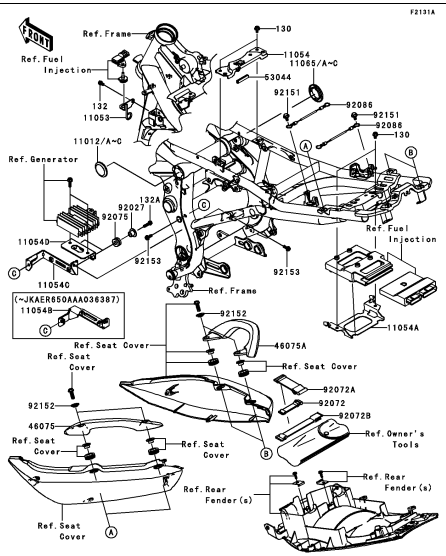

E-6 **Frame Fittings(JKAER650AAA035083～)**

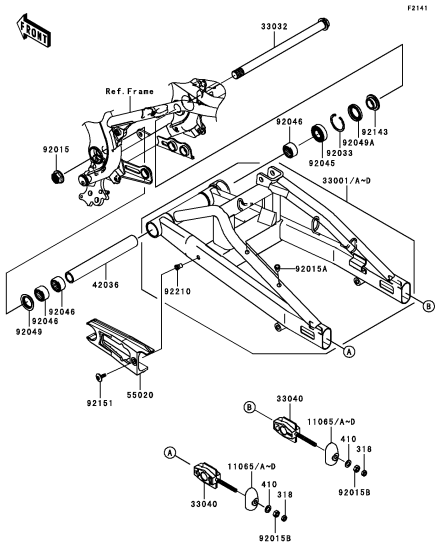

E-7 **Swingarm**

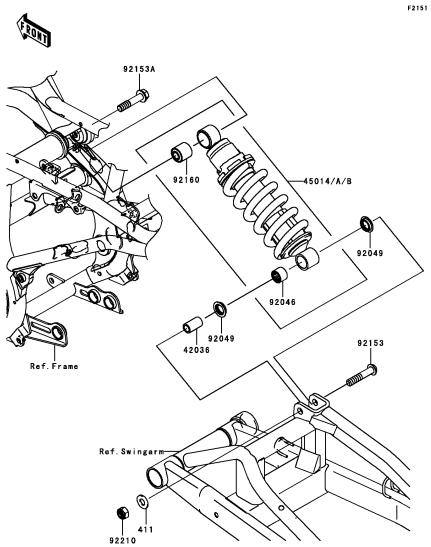

E-8 **Suspension/Shock Absorber**

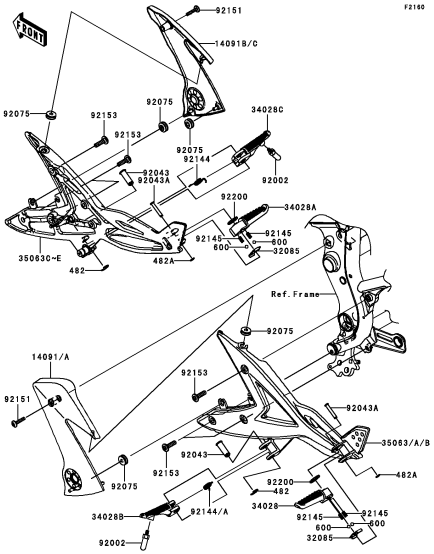

E-9 **Footrests**

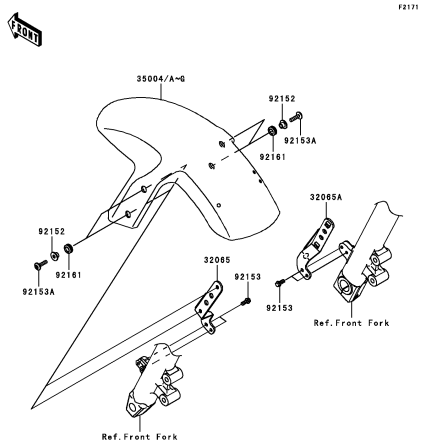

E-10 **Front Fender(s)**

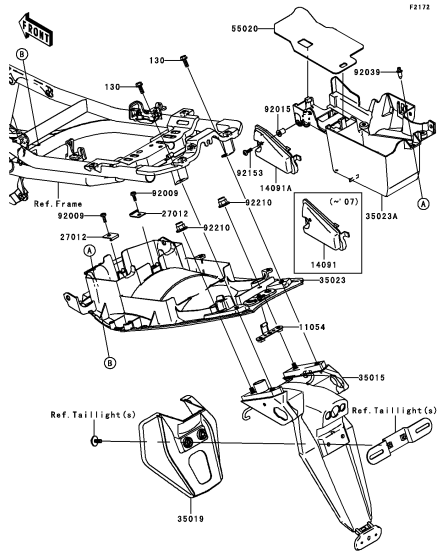

E-11 **Rear Fender(s)**

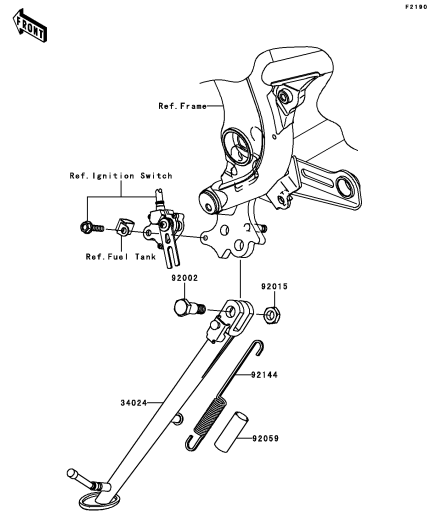

E-12 **Stand(s)**

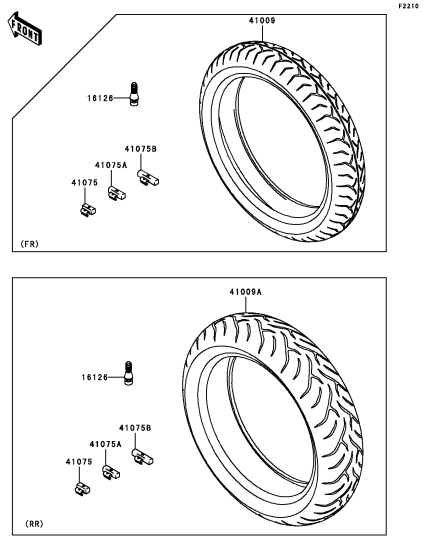

E-13 **Tires**

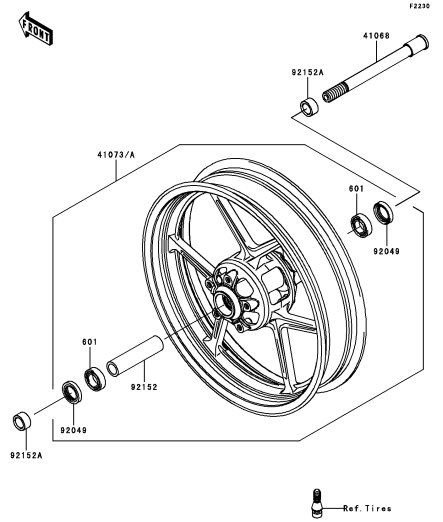

E-14 **Front Hub**

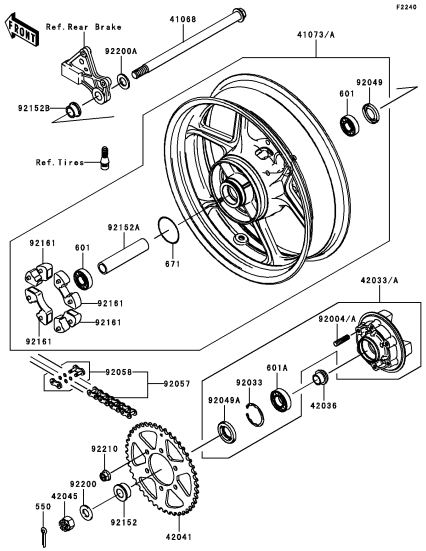

F-3 **Rear Hub**

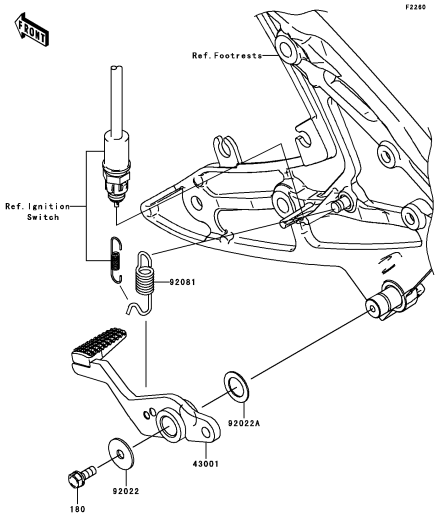

F-4 **Brake Pedal**

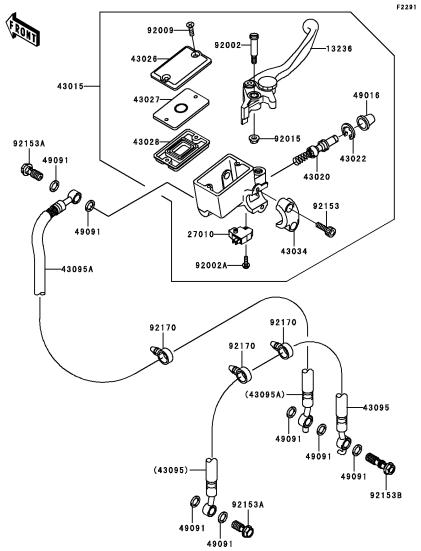

F-5 **Front Master Cylinder**

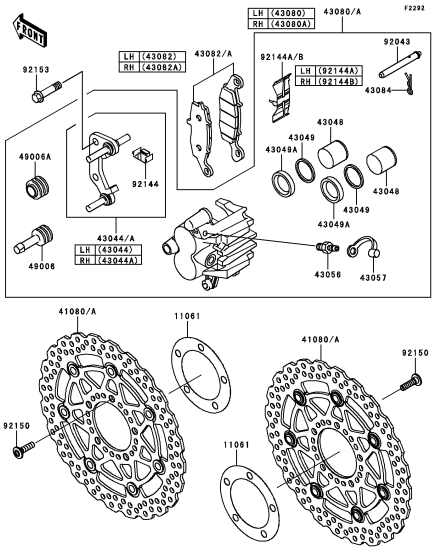

F-6 **Front Brake**

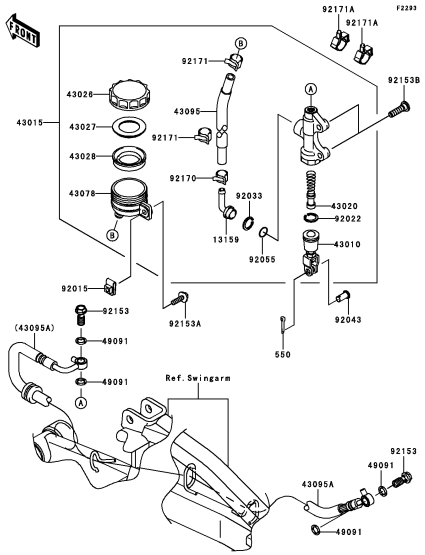

F-7 **Rear Master Cylinder**

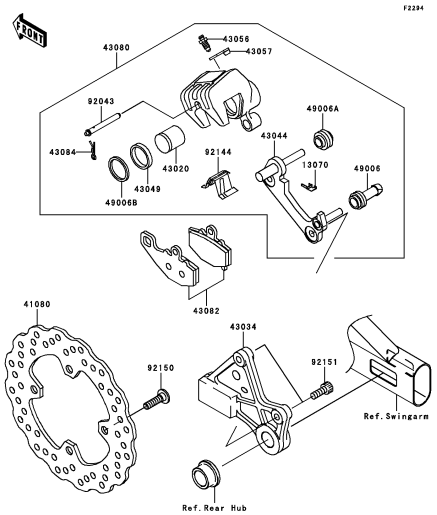

F-8 **Rear Brake**

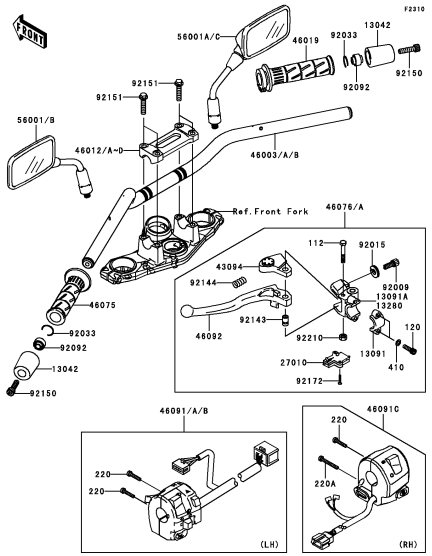

F-9 **Handlebar**

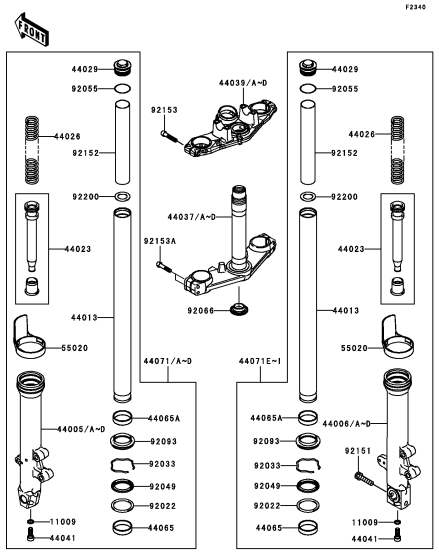

F-10 **Front Fork(1/2)**

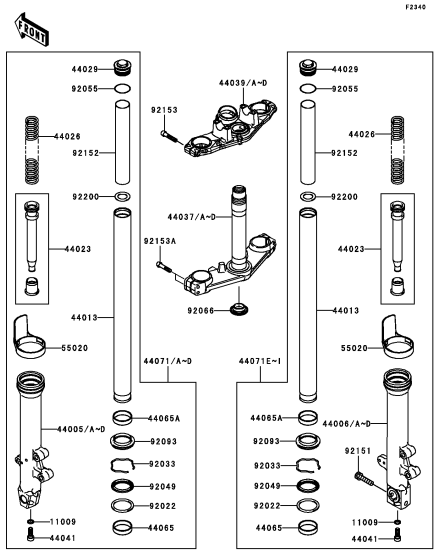

F-11 **Front Fork(2/2)**

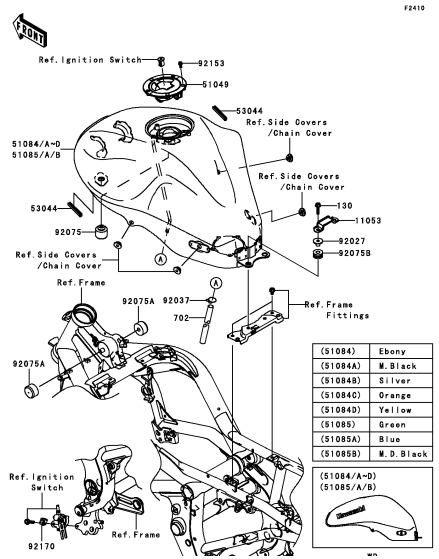

F-12 **Fuel Tank**

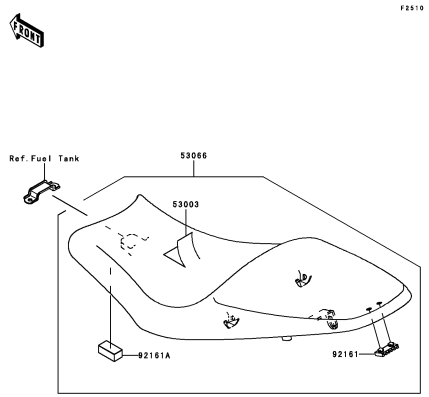

F-13 **Seat**

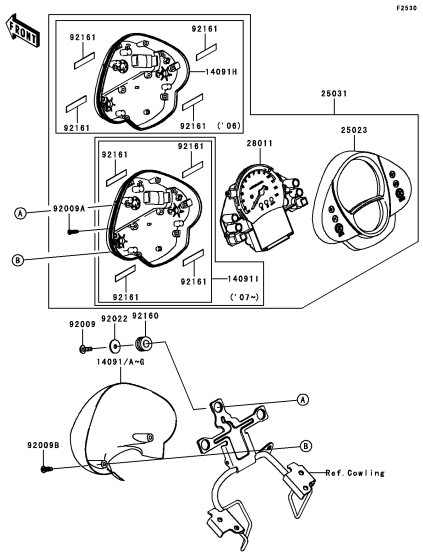

F-14 **Meter(s)**

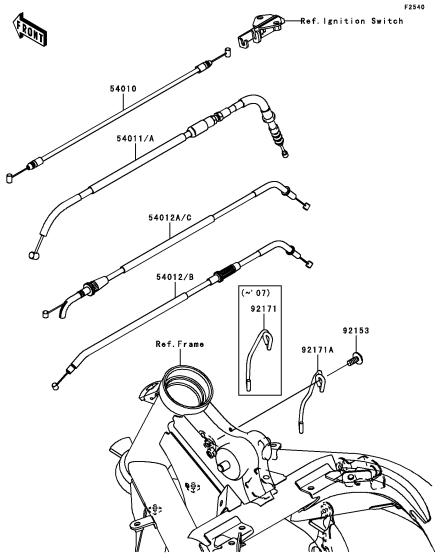

G-3 **Cables**

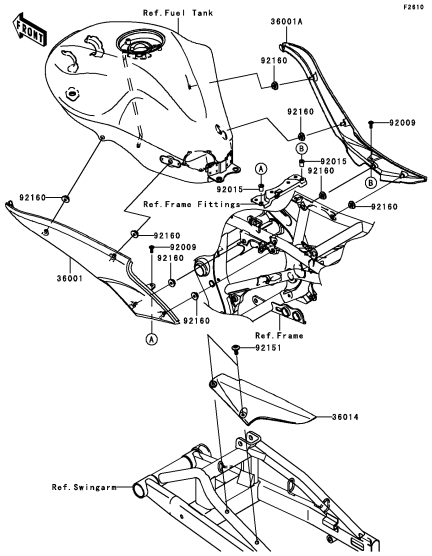

G-4 **Side Covers/Chain Cover**

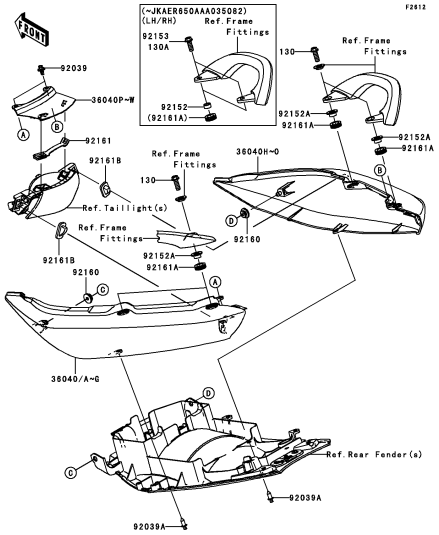

G-5 **Seat Cover**

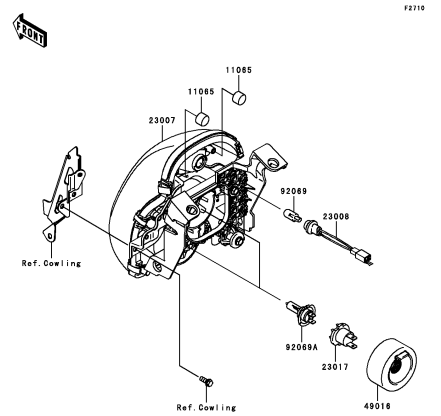

G-6 **Headlight(s)**

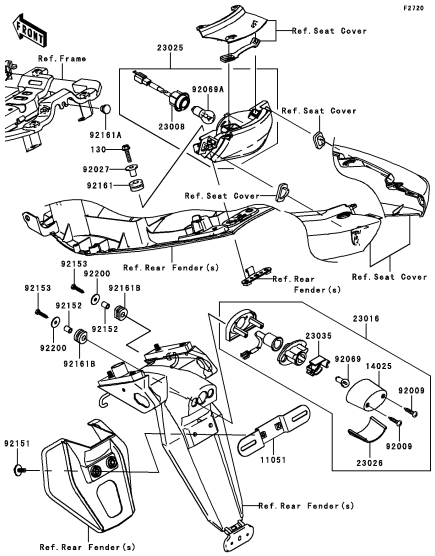

G-7 **Taillight(s)**

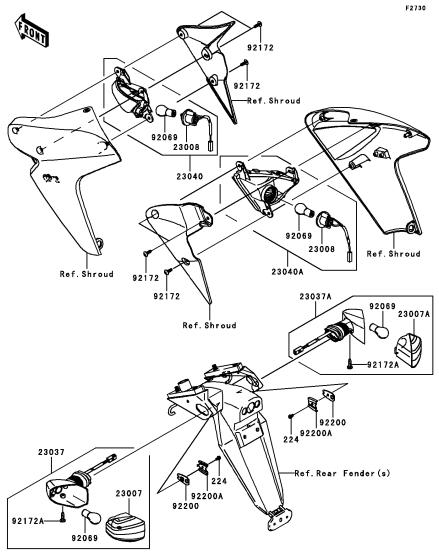

G-8 **Turn Signals**

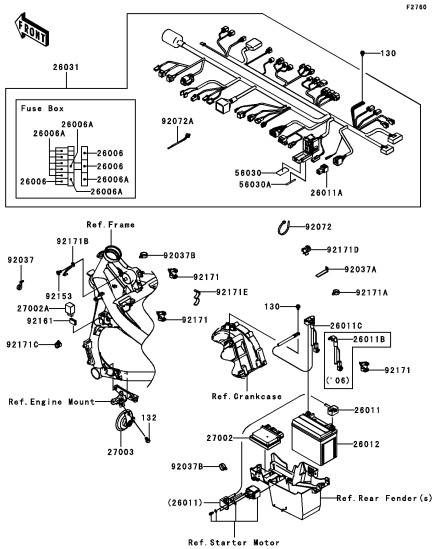

G-9 **Chassis Electrical Equipment**

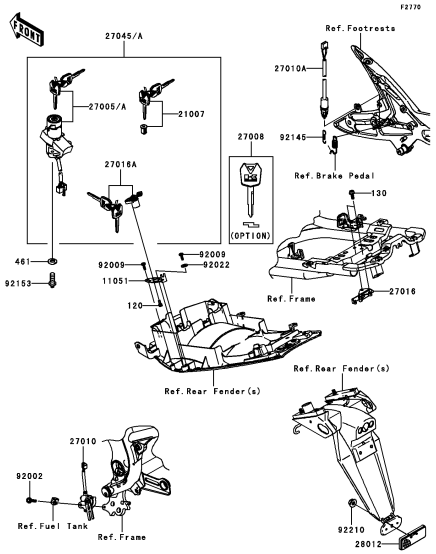

G-10 **Ignition Switch**

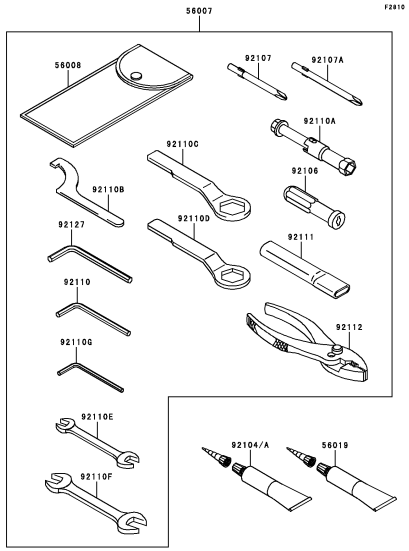

G-11 **Owner’s Tools**

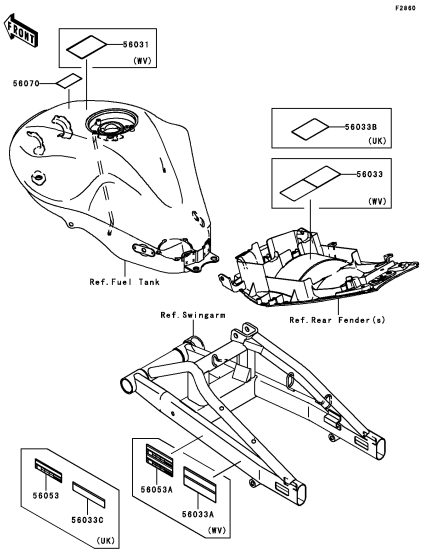

G-12 **Labels**

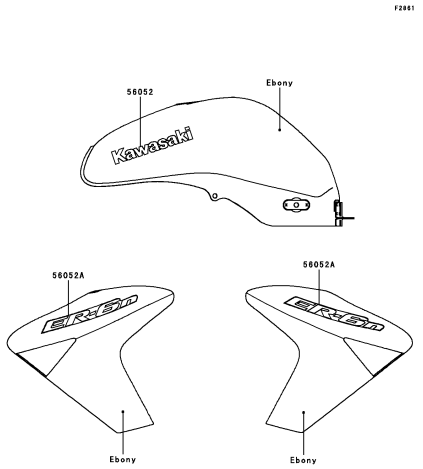

G-13 **Decals(Ebony)(A6S)**

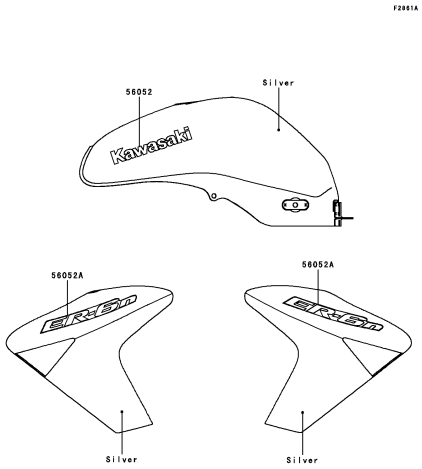

G-14 **Decals(Silver)(A6S)**

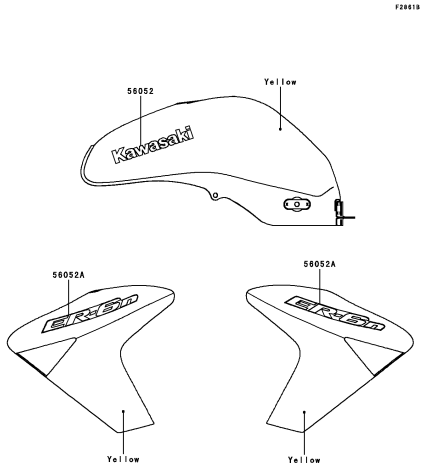

H-3 **Decals(Yellow)(A6S)**

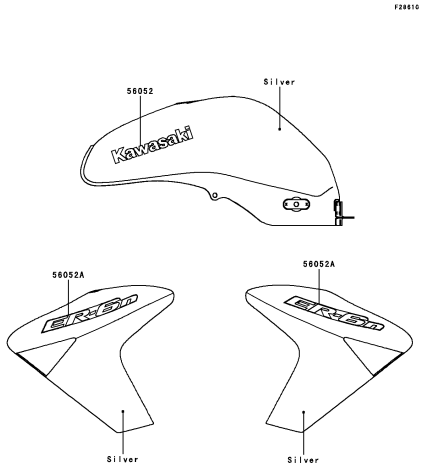

H-4 **Decals(Silver)(A7F)**

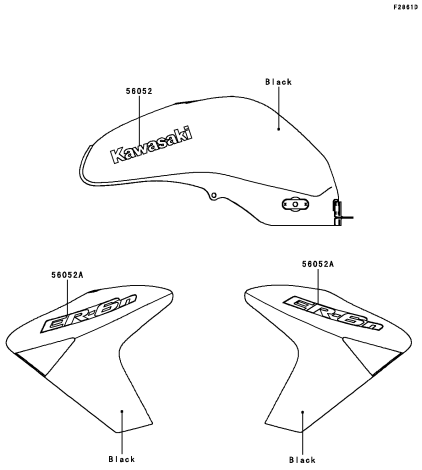

H-5 **Decals(Black)(A7F)**

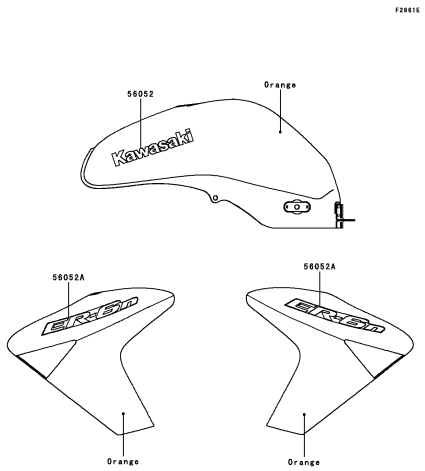

H-6 **Decals(Orange)(A7F)**

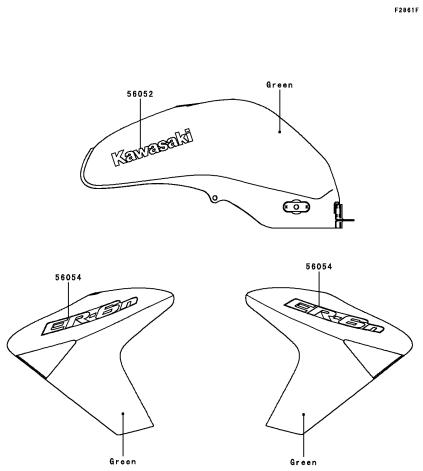

H-7 **Decals(Green)(A8F)**

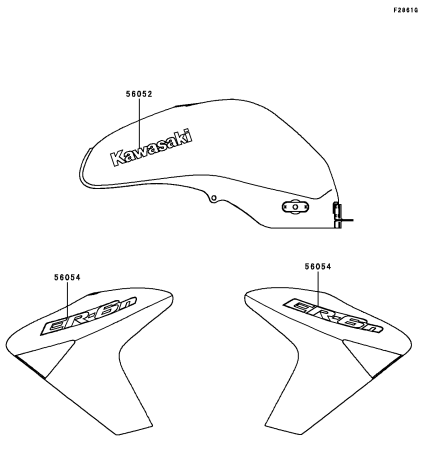

H-8 **Decals(Blue)(Black)(A8F)**

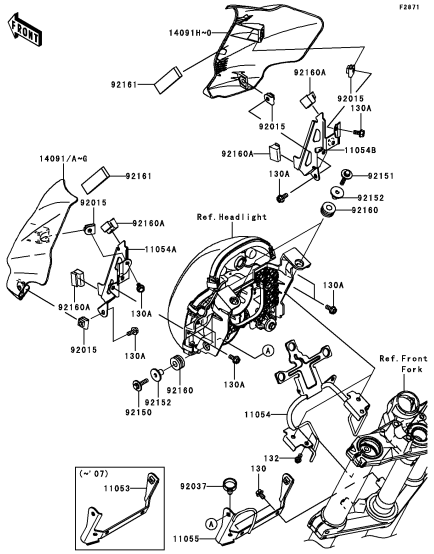

H-9 **Cowling**

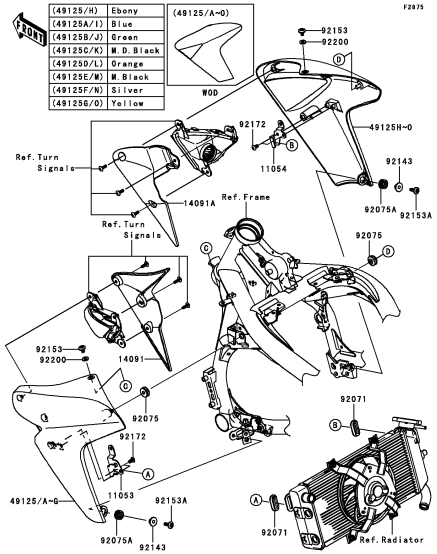

H-10 **Shroud**

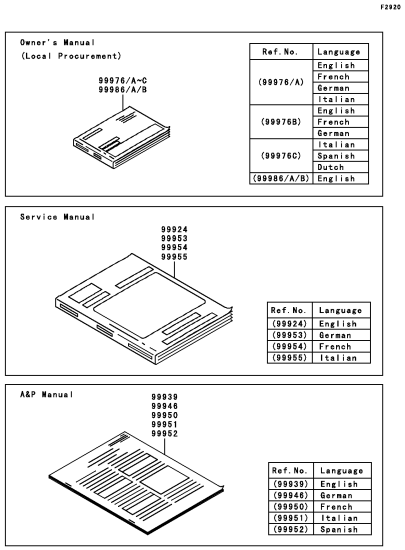

H-11 **Manual**

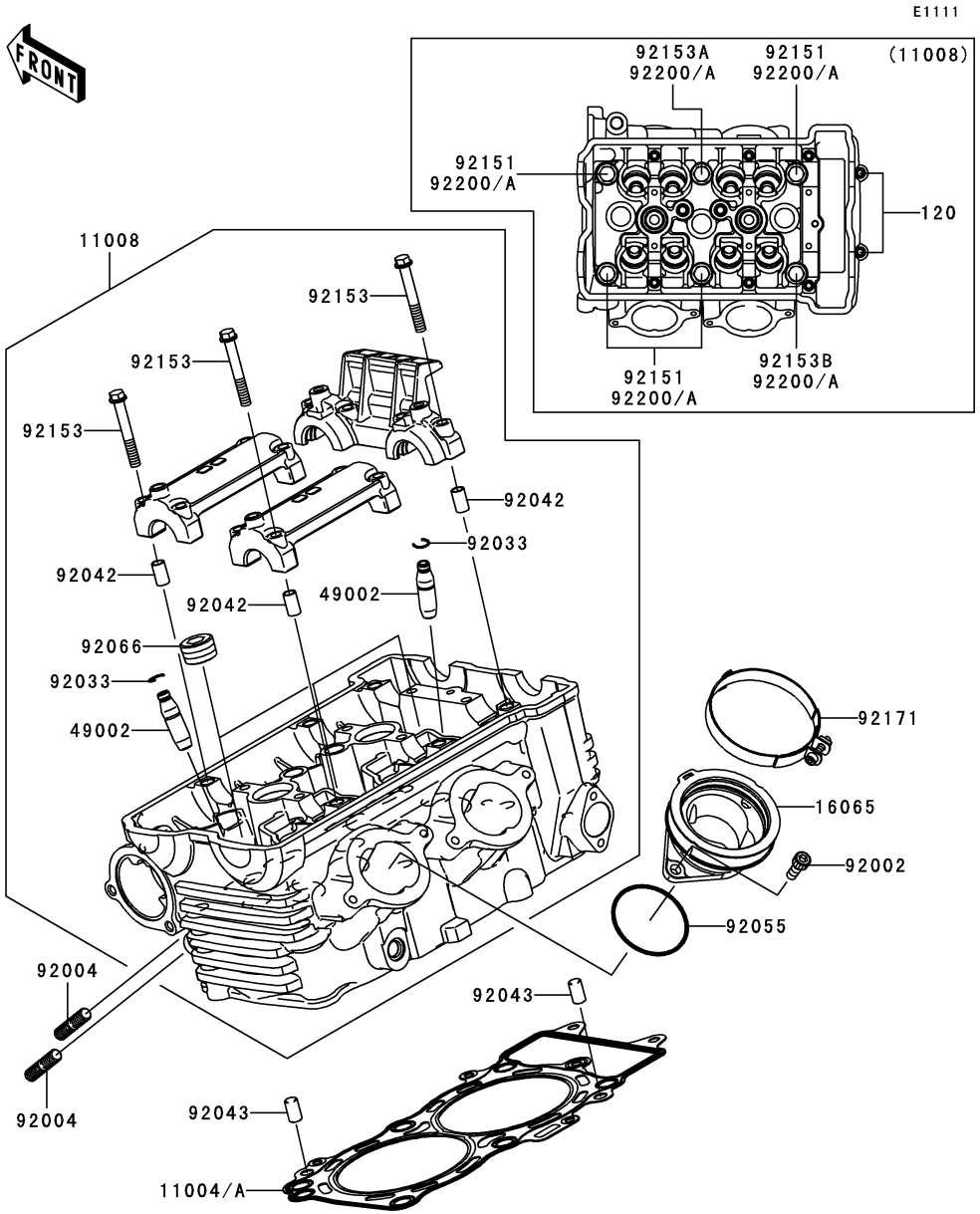

Ref. No.	Part No.	Description	Spec Code	Quantity-ER650 '06 A6S	'07 A7F	'08 A8F		
11004	11004-0035	GASKET-HEAD	(- ER650AE076861)	1	1			
11004A	11004-0064	GASKET-HEAD	(ER650AE076862 -)		1	1		
11008	11008-0089	HEAD-COMP-CYLINDER		1	1	1		
16065	16065-0024	HOLDER,THROTTLE BODY		2	2	2		
49002	49002-1116	GUIDE-VALVE		AR	AR	AR		
92002	92002-1143	BOLT,6X16		4	4	4		
92004	92004-0025	STUD,8X22		4	4	4		
92033	92033-1247	RING-SNAP		8	8	8		
92042	92042-007	PIN,DOWEL,6.3X8X14		6	6	6		
92043	92043-1567	PIN,8X14		2	2	2		
92055	92055-1600	RING-O,47X1.9		2	2	2		
92066	92066-0002	PLUG,PT1/2X12.5		3	3	3		
92151	92151-1152	BOLT,10X158		4	4	4		
92153	92153-0339	BOLT,6X45		12	12	12		
92153A	92153-0972	BOLT,FLANGED-SMALL,10X176		1	1	1		
92153B	92153-1321	BOLT,FLANGED-SMALL,10X80		1	1	1		
92171	92171-1089	CLAMP		2	2	2		
92200	92200-0114	WASHER,10.5X19X2.3	(- ER650AE076861)	6	6			
92200A	92200-0363	WASHER,10.5X19X2.3	(ER650AE076862 -)		6	6		
120	120CD0630	BOLT-SOCKET,6X30		2	2	2		

E1112

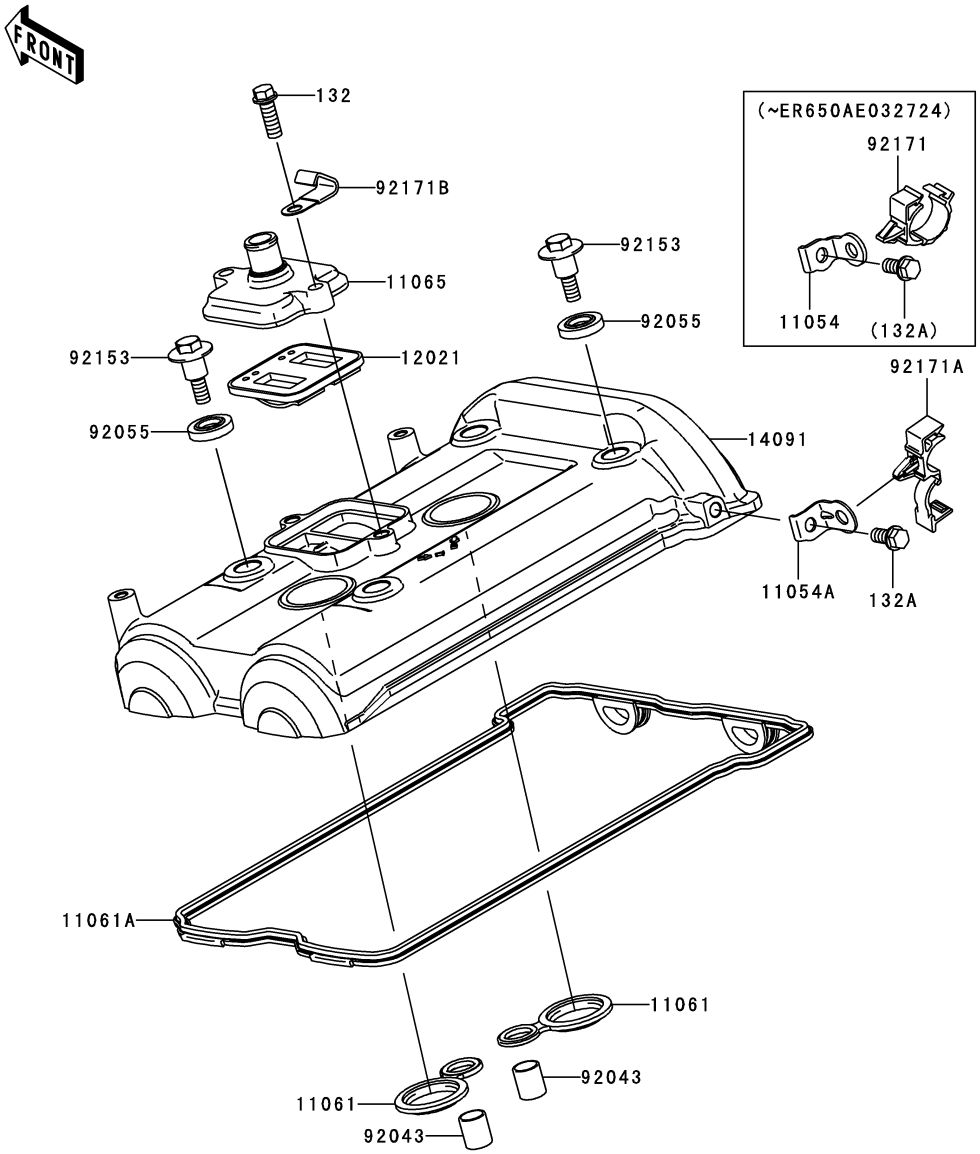

Ref. No.	Part No.	Description	Spec Code	Quantity-ER650 '06 A6S	'07 A7F	'08 A8F		
11054	11054-0238	BRACKET		1				
	(	-	ER650AE032724)					
11054A	11054-0869	BRACKET		1	1	1		
	(	ER650AE032725 -	)					
11061	11061-0105	GASKET,SPARK PLUG HOLE		2	2	2		
11061A	11061-0170	GASKET,HEAD COVER		1	1	1		
11065	11065-0111	CAP		1	1	1		
12021	12021-1130	VALVE-ASSY-REED		1	1	1		
14091	14091-0550	COVER,HEAD		1	1	1		
92043	92043-4009	PIN,10.1X12X14		2	2	2		
92055	92055-1352	RING-O,HEAD COVER BOLT		4	4	4		
92153	92153-0793	BOLT,HEAD COVER		4	4	4		
92171	92171-0316	CLAMP,BRAKE HOSE		1				
	(	-	ER650AE032724)					
92171A	92171-0789	CLAMP,BRAKE HOSE		1	1	1		
	(	ER650AE032725 -	)					
92171B	92171-0813	CLAMP		1	1	1		
132	132BA0618	BOLT-FLANGED-SMALL,6X18		2	2	2		
132A	132BB0612	BOLT-FLANGED-SMALL,6X12		1	1	1		

E1120

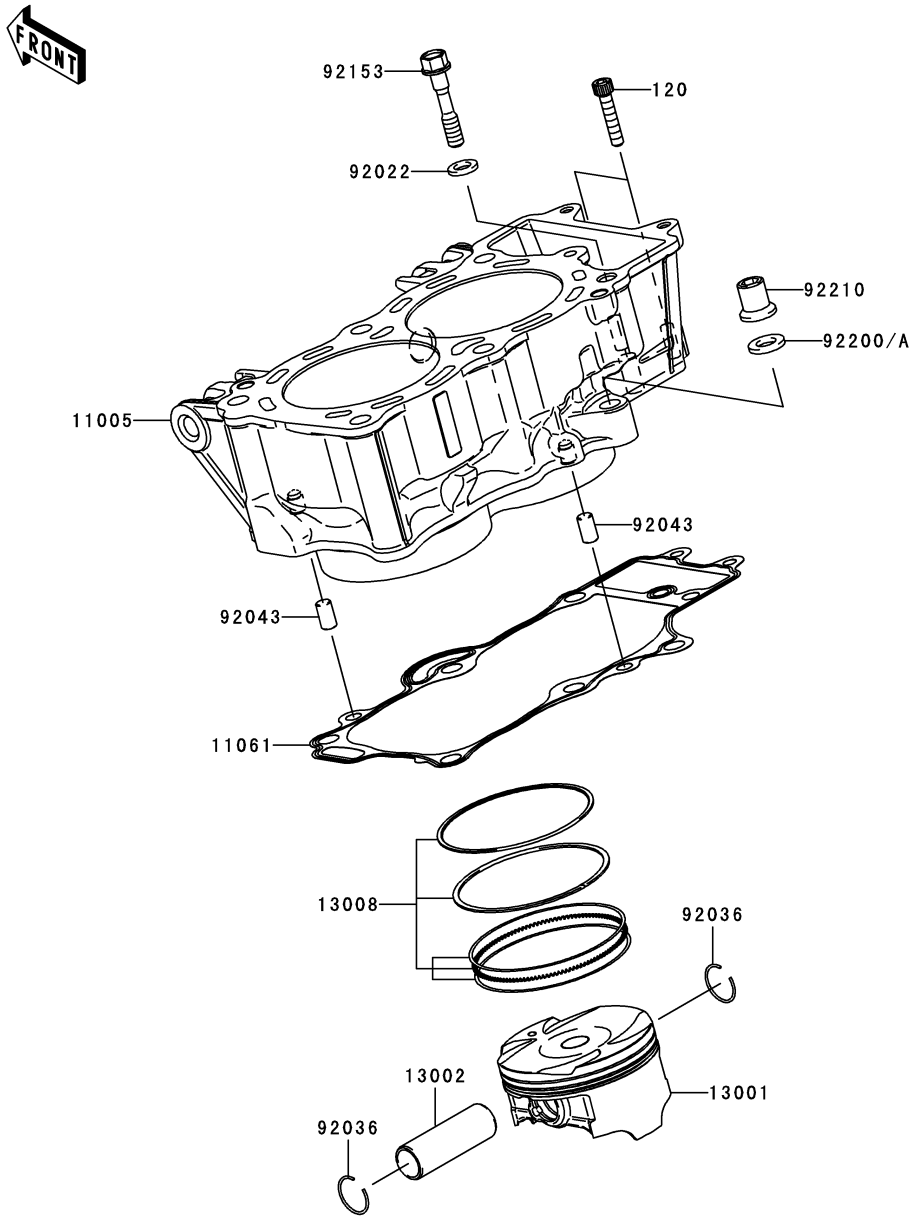

Ref. No.	Part No.	Description	Spec Code	Quantity-ER650 ’06 A6S	’07 A7F	’08 A8F		
11005	11005-0081	CYLINDER-ENGINE		1	1	1		
11061	11061-0171	GASKET,CYLINDER BASE		1	1	1		
13001	13001-0060	PISTON-ENGINE		2	2	2		
13002	13002-0007	PIN-PISTON		2	2	2		
13008	13008-1196	RING-SET-PISTON		2	2	2		
92022	92022-1401	WASHER,9X15.5X2		1	1	1		
92036	92036-008	RING-SNAP,PISTON PIN		4	4	4		
92043	92043-1567	PIN,8X14		2	2	2		
92153	92153-1011	BOLT,8X43		1	1	1		
92200	92200-0114	WASHER,10.5X19X2.3		1	1			
	(	-	ER650AE076861)					
92200A	92200-0363	WASHER,10.5X19X2.3			1	1		
	(	ER650AE076862 -	)					
92210	92210-0223	NUT		1	1	1		
120	120CD0630	BOLT-SOCKET,6X30		2	2	2		

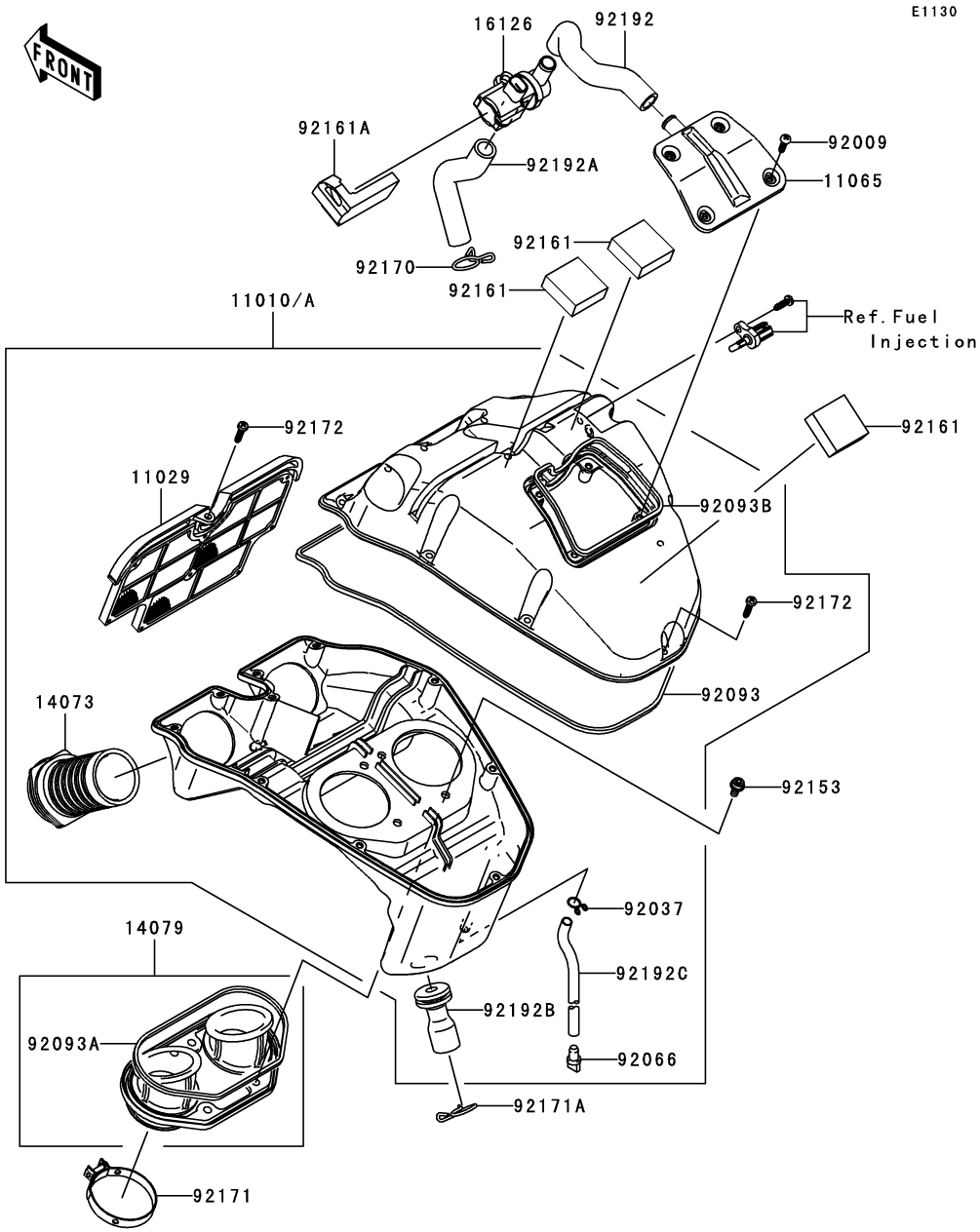

Ref. No.	Part No.	Description	Spec Code	Quantity-ER650 '06 A6S	'07 A7F	'08 A8F		
11010	11010-0108	FILTER-ASSY-AIR		1	1			
11010A	11010-0153	FILTER-ASSY-AIR				1		
11029	11029-0008	ELEMENT-ASSY-AIR FILTER		1	1	1		
11065	11065-0120	CAP,UPPER CASE		1	1	1		
14073	14073-0110	DUCT		2	2	2		
14079	14079-0017	HOLDER-ASSY		1	1	1		
16126	16126-0019	VALVE,AIR SWITING		1	1	1		
92009	92009-1984	SCREW,TAPPING,5X16		4	4	4		
92037	92037-147	CLAMP,TUBE		1	1	1		
92066	92066-1211	PLUG,DRAIN		1	1	1		
92093	92093-0045	SEAL,L=1080		1	1	1		
92093A	92093-0046	SEAL		1	1	1		
92093B	92093-0048	SEAL,L=368		1	1	1		
92153	92153-0759	BOLT,SOCKET,6X12		4	4	4		
92161	92161-0302	DAMPER,T=15		3	3	3		
92161A	92161-0309	DAMPER		1	1	1		
92170	92170-1017	CLAMP		1	1	1		
92171	92171-0314	CLAMP		2	2	2		
92171A	92171-0435	CLAMP		1	1	1		
92172	92172-0009	SCREW,TAPPING,5X20		11	11	11		
92192	92192-0231	TUBE,ASV-A/C		1	1	1		
92192A	92192-0232	TUBE,HEAD-ASV		1	1	1		
92192B	92192-0264	TUBE,BREATHER		1	1	1		
92192C	92192-0325	TUBE,DRAIN,6X9X280		1	1	1		

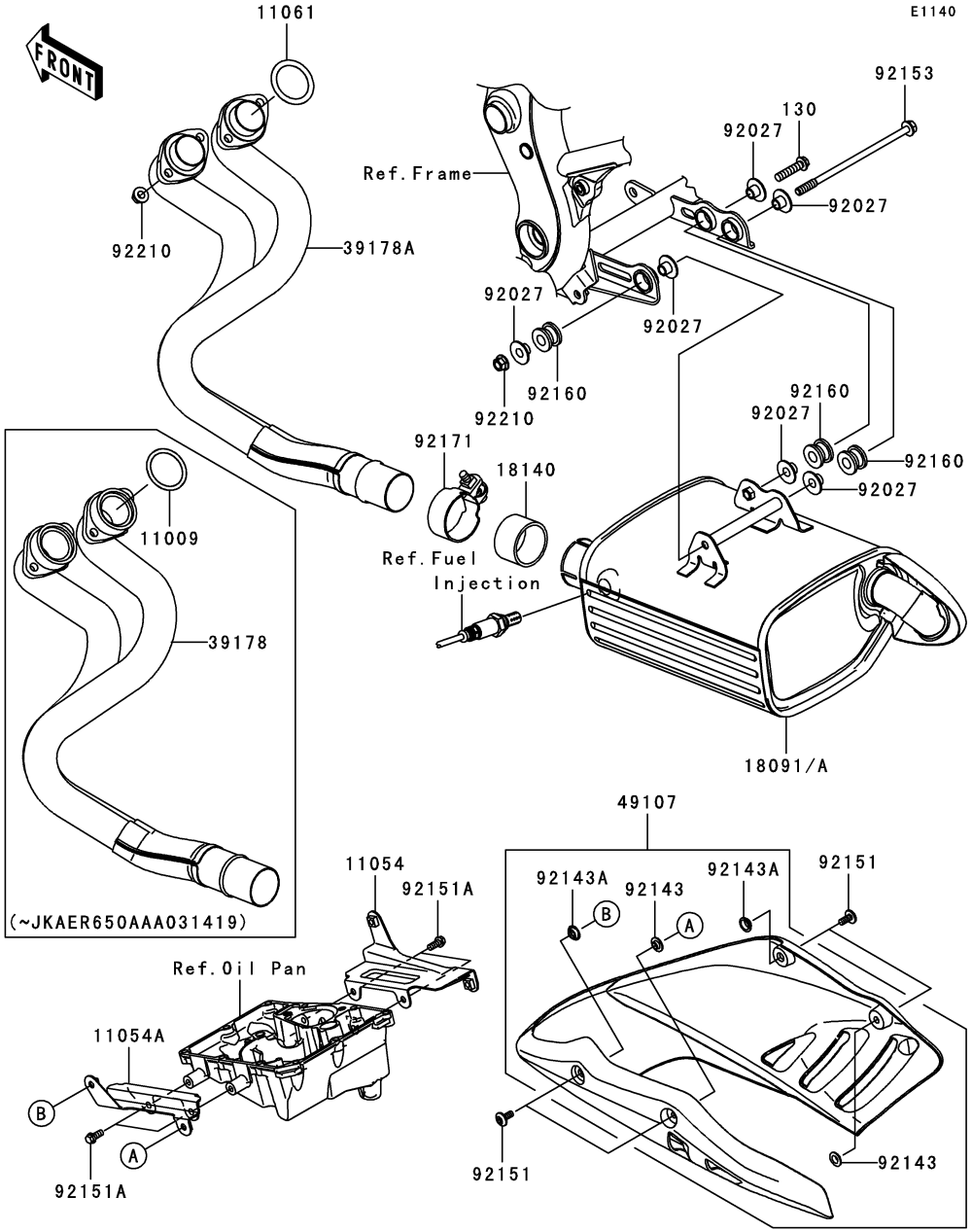

Ref. No.	Part No.	Description	Spec Code	Quantity-ER650 '06 A6S	'07 A7F	'08 A8F		
11009	11009-1856	GASKET,EXHAUST PIPE HOLDER		2	2			
	(	-	JKAER650AAA031419)					
11054	11054-0234	BRACKET,RH		1	1	1		
11054A	11054-0235	BRACKET,LH		1	1	1		
11061	11061-0278	GASKET,EXHAUST PIPE			2	2		
	(JKAER650AAA031420 -		)					
18091	18091-0284	BODY-COMP-MUFFLER		1	1			
18091A	18091-0495	BODY-COMP-MUFFLER				1		
18140	18140-0002	GASKET-MUFFLER		1	1	1		
39178	39178-0058	MANIFOLD-COMP-EXHAUST		1	1			
	(	-	JKAER650AAA031419)					
39178A	39178-0073	MANIFOLD-COMP-EXHAUST			1	1		
	(JKAER650AAA031420 -		)					
49107	49107-0074-837	COVER-EXHAUST PIPE,S.F.C.GRAY		1	1	1		
92027	92027-1653	COLLAR,FLANGED,8.8X10.6		6	6	6		
92143	92143-1087	COLLAR		2	2	2		
92143A	92143-1196	COLLAR		2	2	2		
92151	92151-1654	BOLT,SOCKET,6X14		4	4	4		
92151A	92151-1755	BOLT,FLANGED,6X14		4	4	4		
92153	92153-1357	BOLT,FLANGED,8X165		1	1	1		
92160	92160-1116	DAMPER,MUFFLER MOUNT		3	3	3		
92171	92171-1568	CLAMP		1	1	1		
92210	92210-1114	NUT,8MM		5	5	5		
130	130CD0835	BOLT-FLANGED,8X35		1	1	1		

E1210

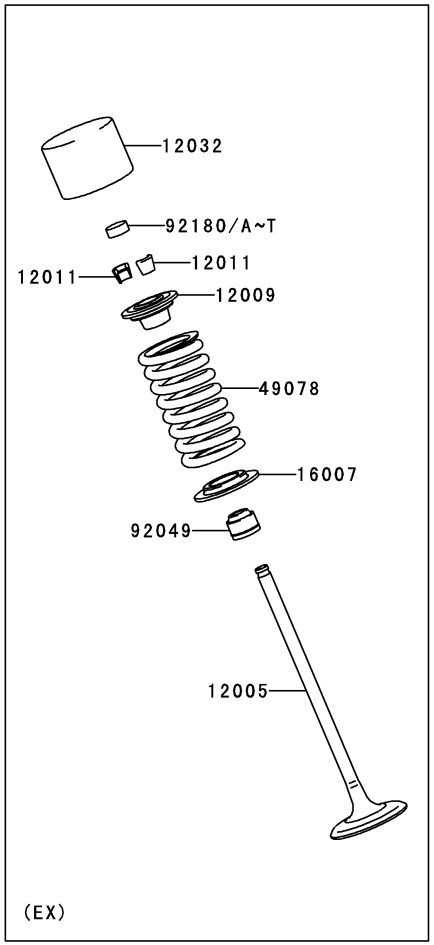

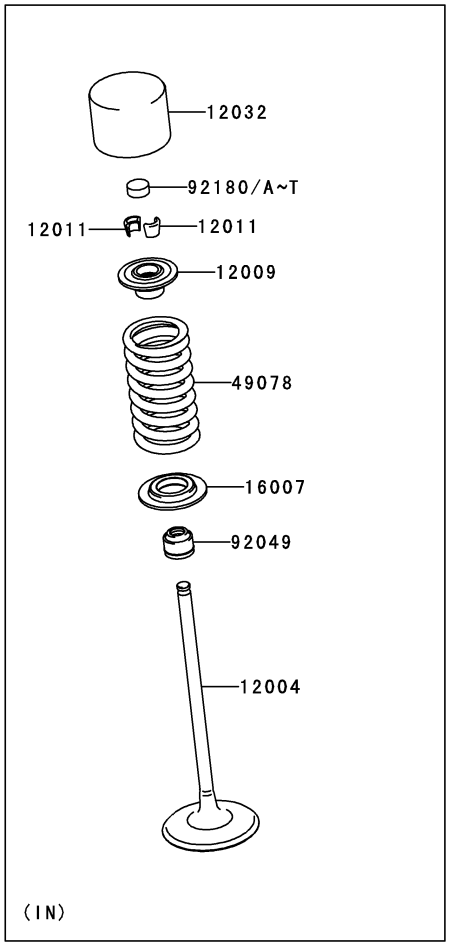

Ref. No.	Part No.	Description	Spec Code	Quantity-ER650 '06 A6S	'07 A7F	'08 A8F		
12004	12004-0015	VALVE-INTAKE		4	4	4		
12005	12005-0035	VALVE-EXHAUST		4	4	4		
12009	12009-1091	RETAINER-VALVE SPRING		8	8	8		
12011	12011-1053	COLLET		16	16	16		
12032	12032-0009	TAPPET		8	8	8		
16007	16007-1228	SEAT-SPRING		8	8	8		
49078	49078-0038	SPRING-ENGINE VALVE		8	8	8		
92049	92049-1349	SEAL-OIL,VSB 4.3 7.5 5.3 8.3		8	8	8		
92180	92180-1014	SHIM,T=2.50		AR	AR	AR		
92180A	92180-1016	SHIM,T=2.55		AR	AR	AR		
92180B	92180-1018	SHIM,T=2.60		AR	AR	AR		
92180C	92180-1020	SHIM,T=2.65		AR	AR	AR		
92180D	92180-1022	SHIM,T=2.70		AR	AR	AR		
92180E	92180-1024	SHIM,T=2.75		AR	AR	AR		
92180F	92180-1026	SHIM,T=2.80		AR	AR	AR		
92180G	92180-1028	SHIM,T=2.85		AR	AR	AR		
92180H	92180-1030	SHIM,T=2.90		AR	AR	AR		
92180I	92180-1032	SHIM,T=2.95		AR	AR	AR		
92180J	92180-1034	SHIM,T=3.00		8	8	8		
92180K	92180-1036	SHIM,T=3.05		AR	AR	AR		
92180L	92180-1038	SHIM,T=3.10		AR	AR	AR		
92180M	92180-1040	SHIM,T=3.15		AR	AR	AR		
92180N	92180-1042	SHIM,T=3.20		AR	AR	AR		
92180O	92180-1044	SHIM,T=3.25		AR	AR	AR		
92180P	92180-1046	SHIM,T=3.30		AR	AR	AR		
92180Q	92180-1048	SHIM,T=3.35		AR	AR	AR		
92180R	92180-1050	SHIM,T=3.40		AR	AR	AR		
92180S	92180-1052	SHIM,T=3.45		AR	AR	AR		
92180T	92180-1054	SHIM,T=3.50		AR	AR	AR		

E1230

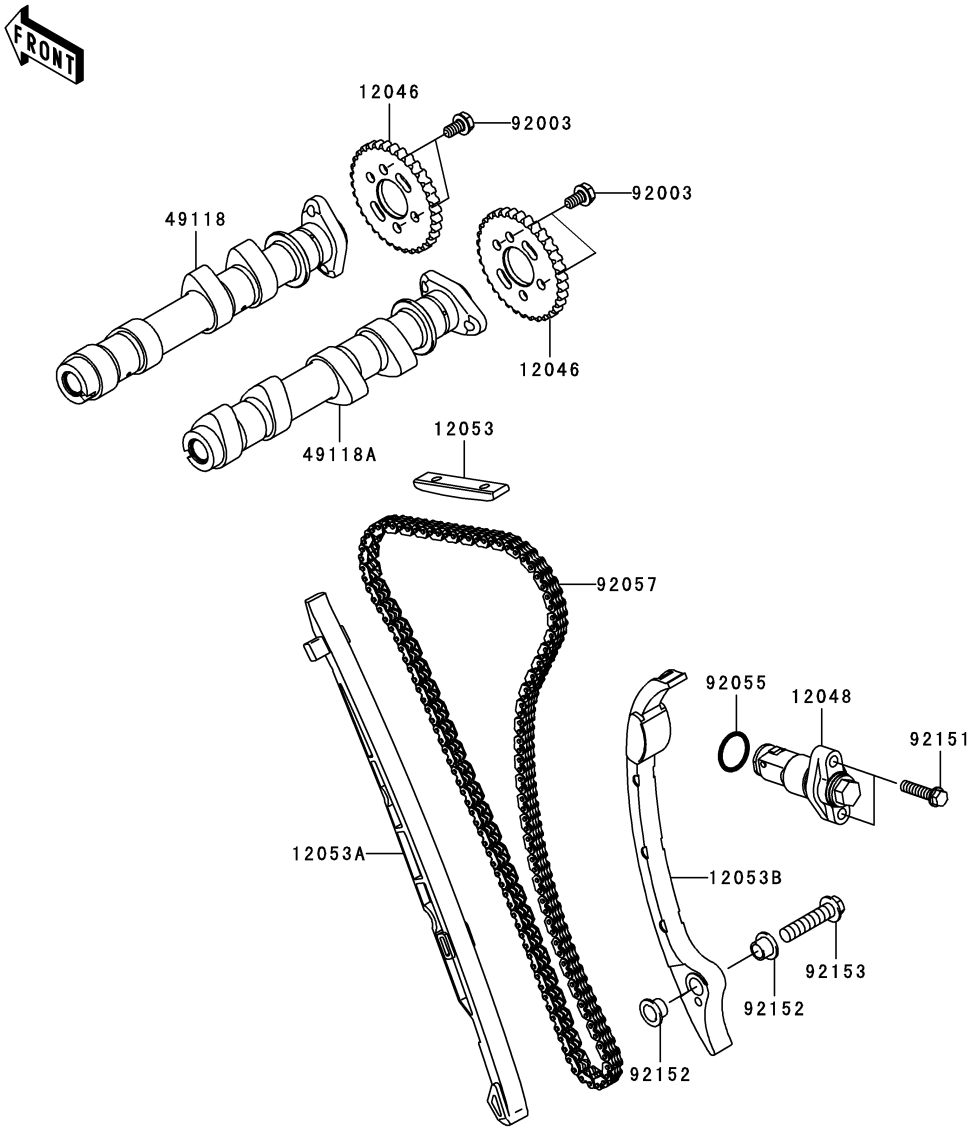

Ref. No.	Part No.	Description	Spec Code	Quantity-ER650 '06 A6S	'07 A7F	'08 A8F		
12046	12046-0041	SPROCKET,CAM,24T		2	2	2		
12048	12048-0027	TENSIONER-ASSY		1	1	1		
12053	12053-0051	GUIDE-CHAIN,UPP		1	1	1		
12053A	12053-0059	GUIDE-CHAIN,FR		1	1	1		
12053B	12053-0075	GUIDE-CHAIN,RR		1	1	1		
49118	49118-0042	CAMSHAFT-COMP,EX		1	1	1		
49118A	49118-0072	CAMSHAFT-COMP,IN		1	1	1		
92003	92003-208	BOLT,FLANGED,6X11		4	4	4		
92055	92055-086	RING-O,18.8X1.9		1	1	1		
92057	92057-0100	CHAIN,CAM,92RH 2015-134M		1	1	1		
92151	92151-1930	BOLT,FLANGED-SMALL,6X25		2	2	2		
92152	92152-0306	COLLAR,8.2X10.6X6.9		2	2	2		
92153	92153-1394	BOLT,FLANGED-SMALL,8X35		1	1	1		

E1321

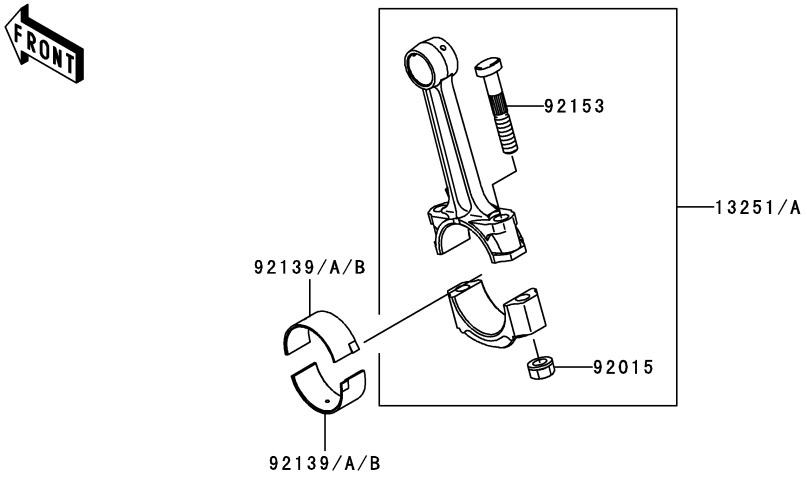

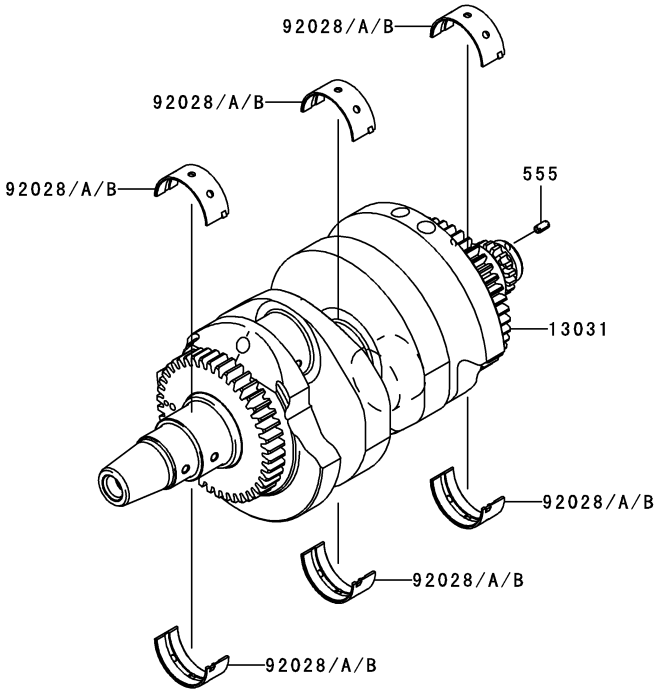

Ref. No.	Part No.	Description	Spec Code	Quantity-ER650 '06 A6S	'07 A7F	'08 A8F		
13031	13031-0071	CRANKSHAFT-COMP		1	1	1		
13251	13251-0010-JJ	ROD-ASSY-CONNECTING,J		AR	AR	AR		
13251A	13251-0010-KK	ROD-ASSY-CONNECTING,K		2	2	2		
92015	92015-1311	NUT,FLANGED,8MM		4	4	4		
92028	92028-1903	BUSHING,CRANKSHAFT,BLUE		6	6	6		
92028A	92028-1904	BUSHING,CRANKSHAFT,BLACK		AR	AR	AR		
92028B	92028-1905	BUSHING,CRANKSHAFT,BROWN		AR	AR	AR		
92139	92139-0114	BUSHING,CON-ROD,BLUE		4	4	4		
92139A	92139-0115	BUSHING,CON-ROD,BLACK		AR	AR	AR		
92139B	92139-0116	BUSHING,CON-ROD,BROWN		AR	AR	AR		
92153	92153-0957	BOLT,CON-ROD,8X49		4	4	4		
555	555A0408	PIN-SPRING,4X8		1	1	1		

E1323

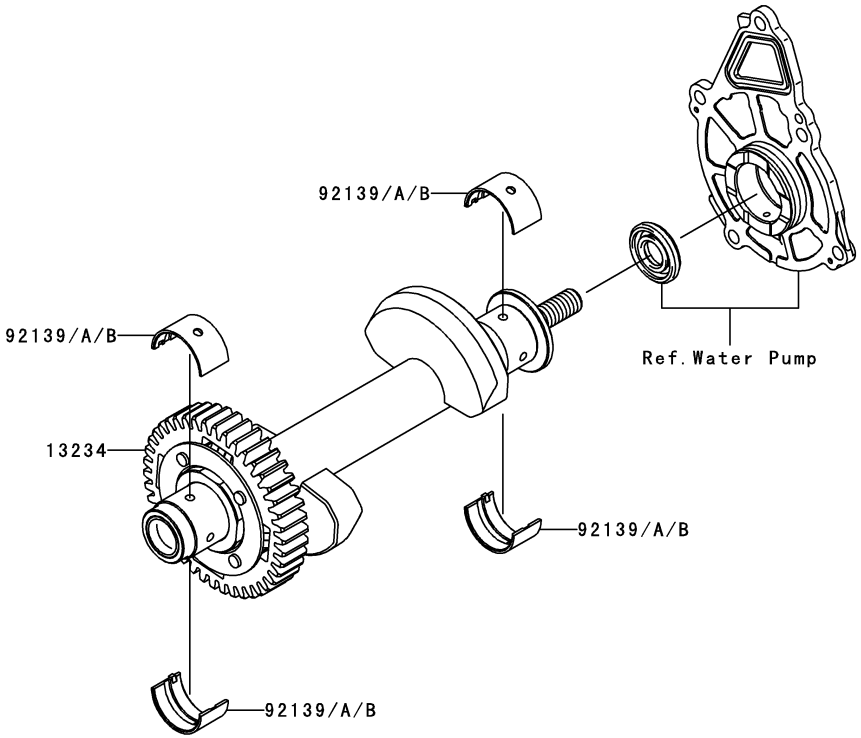

Ref. No.	Part No.	Description	Spec Code	Quantity-ER650				
				’06	’07	’08		
				A6S	A7F	A8F		
13234	13234-0024	SHAFT-COMP,BALANCER		1	1	1		
92139	92139-0117	BUSHING,BALANCER,BLUE		4	4	4		
92139A	92139-0118	BUSHING,BALANCER,BLACK		AR	AR	AR		
92139B	92139-0119	BUSHING,BALANCER,BROWN		AR	AR	AR		

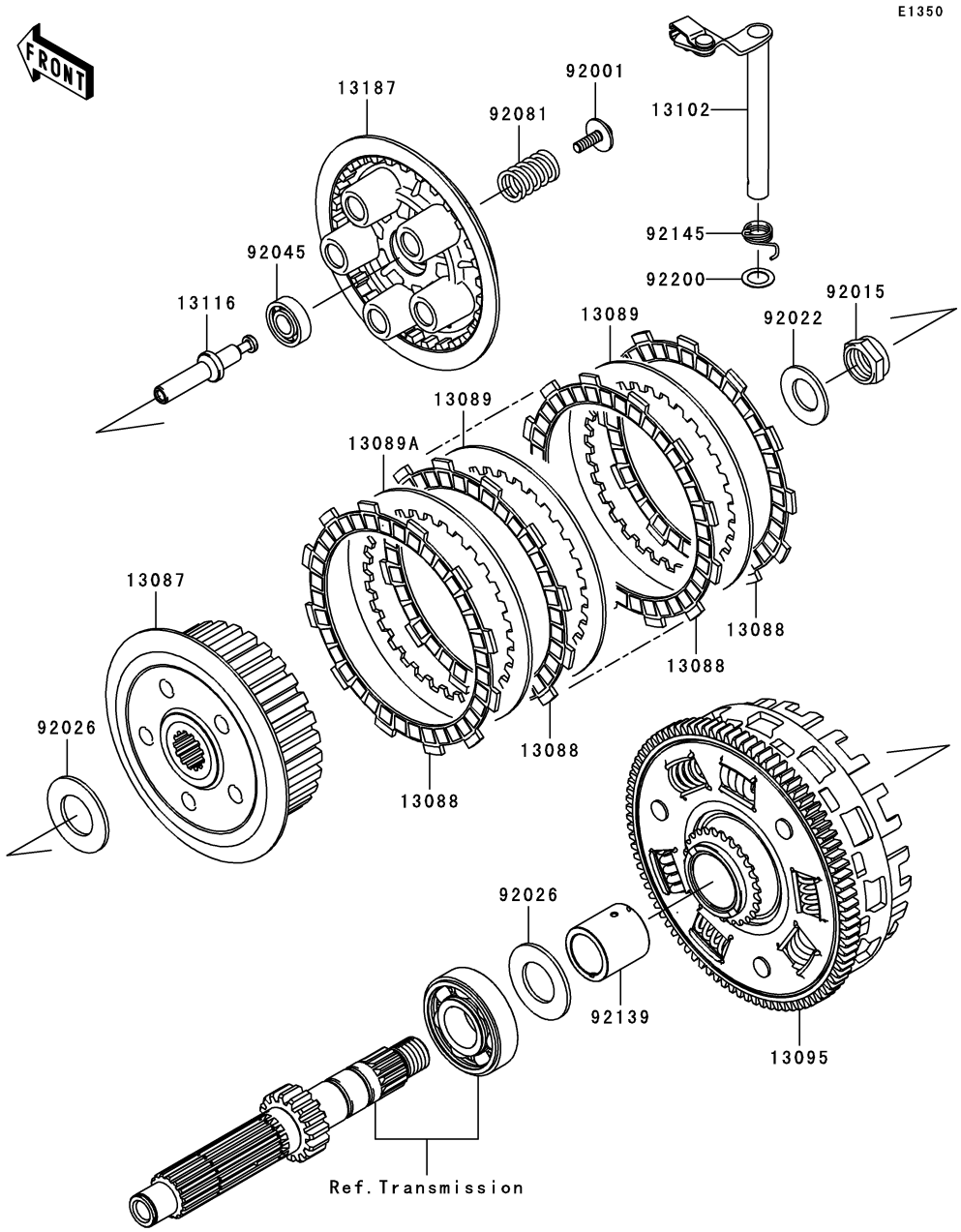

Ref. No.	Part No.	Description	Spec Code	Quantity-ER650				
				’06	’07	’08		
				A6S	A7F	A8F		
13087	13087-042	HUB-CLUTCH		1	1	1		
13088	13088-1105	PLATE-FRICTION		7	7	7		
13089	13089-0016	PLATE-CLUTCH,T=2.3		5	5	5		
13089A	13089-0017	PLATE-CLUTCH,T=2.6		1	1	1		
13095	13095-0059	HOUSING-COMP-CLUTCH		1	1	1		
13102	13102-0021	RELEASE-COMP-CLUTCH		1	1	1		
13116	13116-0018	ROD-PUSH		1	1	1		
13187	13187-1006	PLATE-CLUTCH OPERATING		1	1	1		
92001	92001-1066	BOLT,FLANGED,6X18		5	5	5		
92015	92015-1555	NUT,20MM		1	1	1		
92022	92022-1868	WASHER,20.3X36X3.7		1	1	1		
92026	92026-022	SPACER,25.5X47X2.5		2	2	2		
92045	92045-1235	BEARING-BALL,6001C3ML01		1	1	1		
92081	92081-1033	SPRING,CLUTCH		5	5	5		
92139	92139-0106	BUSHING		1	1	1		
92145	92145-0066	SPRING,CLUTCH RELEASE		1	1	1		
92200	92200-1487	WASHER,12X18.5X0.5		1	1	1		

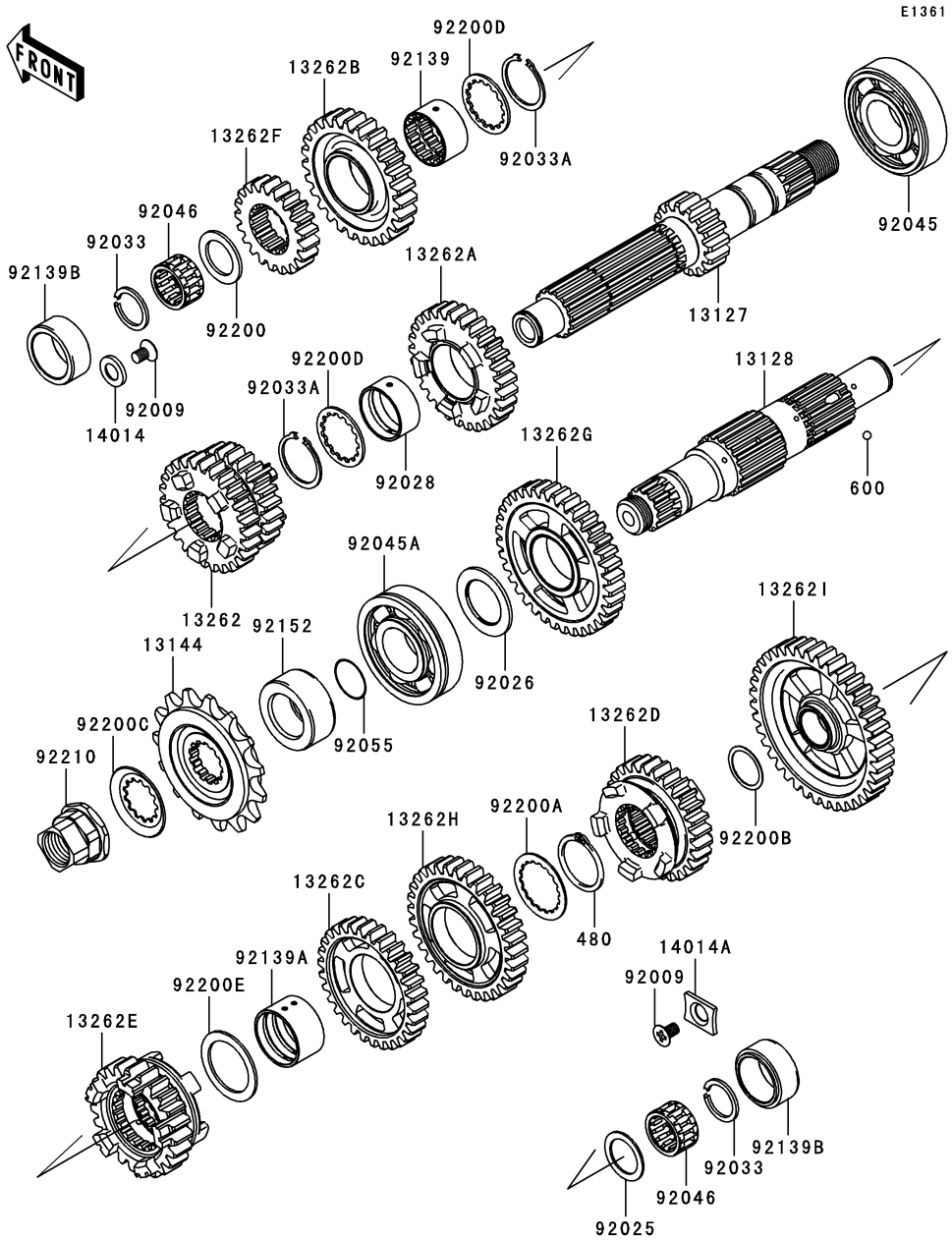

Ref. No.	Part No.	Description	Spec Code	Quantity-ER650 '06 A6S	'07 A7F	'08 A8F		
13127	13127-0028	SHAFT-TRANSMISSION INPUT,16T		1	1	1		
13128	13128-0020	SHAFT-TRANSMISSION OUTPUT		1	1	1		
13144	13144-0024	SPROCKET-OUTPUT,15T,#520		1	1	1		
13262	13262-0245	GEAR,INPUT 3RD&4TH,24T&27T		1	1	1		
13262A	13262-0246	GEAR,INPUT 5TH,29T		1	1	1		
13262B	13262-0247	GEAR,INPUT TOP,27T		1	1	1		
13262C	13262-0251	GEAR,OUTPUT 4TH,30T		1	1	1		
13262D	13262-0252	GEAR,OUTPUT 5TH,28T		1	1	1		
13262E	13262-0253	GEAR,OUTPUT TOP,23T		1	1	1		
13262F	13262-0335	GEAR,INPUT 2ND,21T		1	1	1		
13262G	13262-0337	GEAR,OUTPUT 2ND,36T		1	1	1		
13262H	13262-0338	GEAR,OUTPUT 3RD,32T		1	1	1		
13262I	13262-0346	GEAR,OUTPUT LOW,39T		1	1	1		
14014	14014-0019	PLATE-POSITION,9.5X17X2.3		1	1	1		
14014A	14014-0020	PLATE-POSITION,RH		1	1	1		
92009	92009-1375	SCREW,6X10		2	2	2		
92025	92025-1455	SHIM,20.3X28X1.1		1	1	1		
92026	92026-1529	SPACER,25.3X39X2.0		1	1	1		
92028	92028-1449	BUSHING,INPUT GEAR		1	1	1		
92033	92033-015	RING-SNAP,20MM		2	2	2		
92033A	92033-1037	RING-SNAP,25.9X30.6X1.2		2	2	2		
92045	92045-0042	BEARING-BALL,25X62X17		1	1	1		
92045A	92045-1224	BEARING-BALL,6305N2SH2		1	1	1		
92046	92046-1185	BEARING-NEEDLE,KMJ20X26X13.8X1		2	2	2		
92055	92055-1293	RING-O,21.5X1.5		1	1	1		
92139	92139-0107	BUSHING,INPUT TOP GEAR		1	1	1		
92139A	92139-0108	BUSHING,OUT 3RD&4TH GEAR		1	1	1		
92139B	92139-0120	BUSHING,BEARING-NEEDLE		2	2	2		
92152	92152-0300	COLLAR,25X40X17.2		1	1	1		
92200	92200-0221	WASHER,20.2X30X1.8		1	1	1		
92200A	92200-0222	WASHER,30.3X38X1.0		1	1	1		
92200B	92200-0291	WASHER,20.2X25.0X0.5		1	1	1		
92200C	92200-1065	WASHER		1	1	1		
92200D	92200-1240	WASHER,28.5X34.0X1.5		2	2	2		
92200E	92200-1278	WASHER,29.9X40X1.5		1	1	1		
92210	92210-0222	NUT,M20,L=24MM		1	1	1		
480	480J2900	CIRCLIP		1	1	1		
600	600A0500	BALL-STEEL,5/32"		3	3	3		

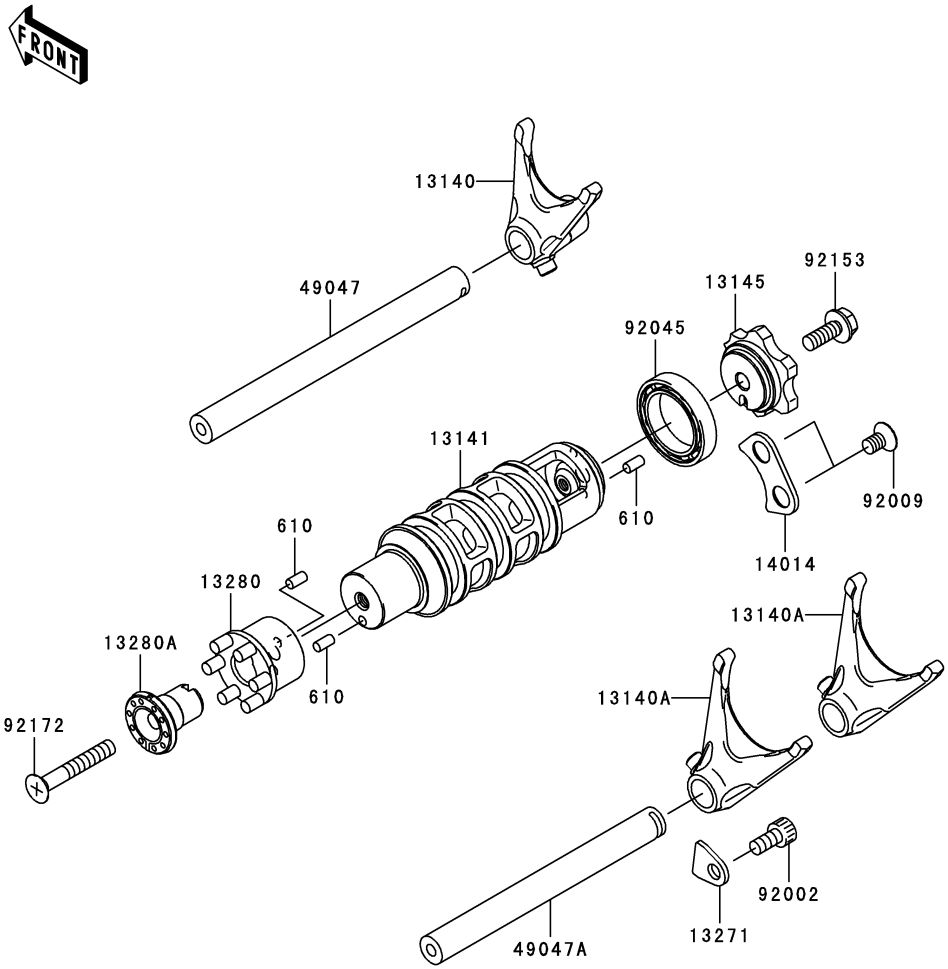

E1362

Ref. No.	Part No.	Description	Spec Code	Quantity-ER650 '06 A6S	'07 A7F	'08 A8F		
13140	13140-0025	FORK-SHIFT,INPUT		1	1	1		
13140A	13140-0026	FORK-SHIFT,OUTPUT		2	2	2		
13141	13141-0018	DRUM-CHANGE		1	1	1		
13145	13145-0020	CAM-CHANGE DRUM		1	1	1		
13271	13271-0626	PLATE		1	1	1		
13280	13280-0137	HOLDER		1	1	1		
13280A	13280-0178	HOLDER,NEUTRAL SWITCH		1	1	1		
14014	14014-0018	PLATE-POSITION		1	1	1		
49047	49047-0019	ROD-SHIFT,INPUT		1	1	1		
49047A	49047-0020	ROD-SHIFT,OUTPUT		1	1	1		
92002	92002-1796	BOLT,SOCKET,6X12		1	1	1		
92009	92009-1375	SCREW,6X10		2	2	2		
92045	92045-1122	BEARING-BALL,6805		1	1	1		
92153	92153-0958	BOLT,FLANGED,6X18		1	1	1		
92172	92172-0209	SCREW-CSK-CROS,6X40		1	1	1		
610	610A0408	ROLLER,4X8		3	3	3		

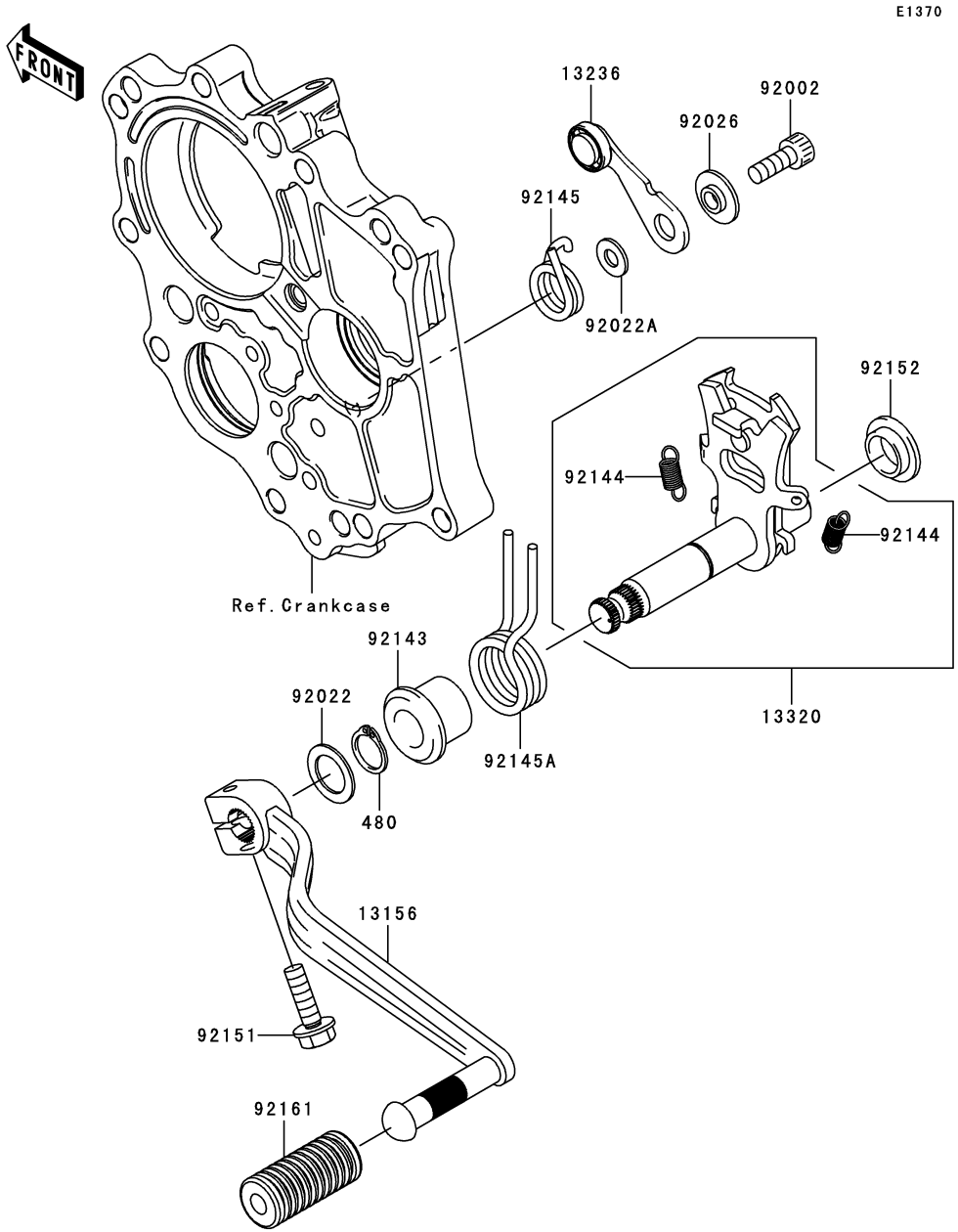

Ref. No.	Part No.	Description	Spec Code	Quantity-ER650				
				’06	’07	’08		
				A6S	A7F	A8F		
13156	13156-0072	LEVER-CHANGE,PEDAL		1	1	1		
13236	13236-0094	LEVER-COMP,POSITION		1	1	1		
13320	13320-0010	LEVER-ASSY		1	1	1		
92002	92002-1778	BOLT,SOCKET,6X16		1	1	1		
92022	92022-1496	WASHER,13.3X20X1		1	1	1		
92022A	92022-1827	WASHER,6X12.8X1.2		1	1	1		
92026	92026-1217	SPACER		1	1	1		
92143	92143-1498	COLLAR,RETURN SPRING		1	1	1		
92144	92144-1975	SPRING,CHANGE LEVER		2	2	2		
92145	92145-0304	SPRING,POSITION		1	1	1		
92145A	92145-0326	SPRING,RETURN		1	1	1		
92151	92151-1226	BOLT,FLANGED,6X20		1	1	1		
92152	92152-1075	COLLAR		1	1	1		
92161	92161-1300	DAMPER,CHANGE PEDAL		1	1	1		
480	480J1300	CIRCLIP-TYPE-C,13MM		1	1	1		

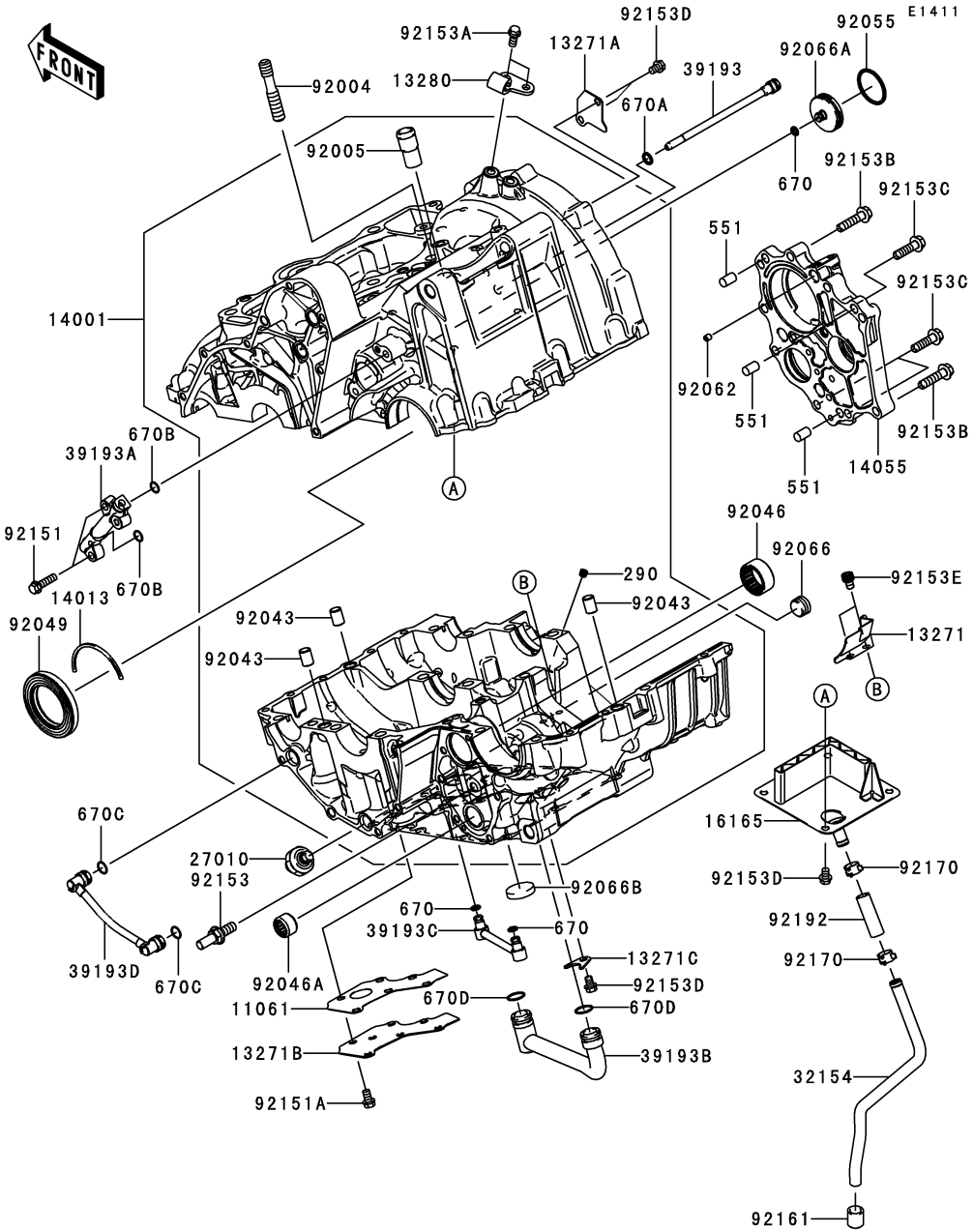

Ref. No.	Part No.	Description	Spec Code	Quantity-ER650				
				’06	’07	’08		
				A6S	A7F	A8F		
11061	11061-0182	GASKET		1	1			
13271	13271-0575	PLATE,OIL SHIELDING		1	1			
13271A	13271-0577	PLATE		1	1			
13271B	13271-0584	PLATE		1	1			
13271C	13271-1187	PLATE,OIL PIPE		1	1			
13280	13280-0171	HOLDER,CLUTCH CABLE		1	1			
14001	14001-0080	SET-CRANKCASE		1	1			
14013	14013-1004	RING-POSITION,T=1.98		1	1			
14055	14055-0018	CASE-GEAR		1	1			
16165	16165-0001	SEPARATOR,BREATHER		1	1			
27010	27010-1313	SWITCH,OIL PRESSURE		1	1			
32154	32154-0661	PIPE,BREATHER		1	1			
39193	39193-0029	PIPE-OIL		1	1			
39193A	39193-0030	PIPE-OIL		1	1			
39193B	39193-0031	PIPE-OIL		1	1			
39193C	39193-0032	PIPE-OIL		1	1			
39193D	39193-0033	PIPE-OIL		1	1			
92004	92004-0024	STUD,10X34.5		1	1			
92005	92005-1238	FITTING,BREATHER		1	1			
92043	92043-1037	PIN,DOWEL,10X14		3	3			
92046	92046-0017	BEARING-NEEDLE,24BTM3013		1	1			
92046A	92046-1148	BEARING-NEEDLE,HK1312		1	1			
92049	92049-1501	SEAL-OIL,HTC40628		1	1			
92055	92055-0006	RING-O,29.7X2.4		1	1			
92062	92062-1086	NOZZLE,5X6,SILVER		1	1			
92066	92066-0003	PLUG,PT3/8X10		1	1			
92066A	92066-0056	PLUG,INPUT SHAFT		1	1			
92066B	92066-0061	PLUG,25X5		1	1			
92151	92151-1197	BOLT,FLANGED-SMALL,6X22		2	2			
92151A	92151-1389	BOLT,FLANGED-SMALL,6X10		6	6			
92153	92153-0530	BOLT,8X20		1	1			
92153A	92153-0542	BOLT,6X14		2	2			
92153B	92153-0962	BOLT,FLANGED,6X30		6	6			
92153C	92153-0963	BOLT,FLANGED,7X26		3	3			
92153D	92153-0964	BOLT,FLANGED-SMALL,6X8		7	7			
92153E	92153-1414	BOLT,SOCKET,6X8		2	2			
92161	92161-0267	DAMPER		1	1			
92170	92170-1167	CLAMP		2	2			
92192	92192-0225	TUBE,9X12X38		1	1			
290	290Q0606	SCREW-SET-SOCKET,6X6		1	1			

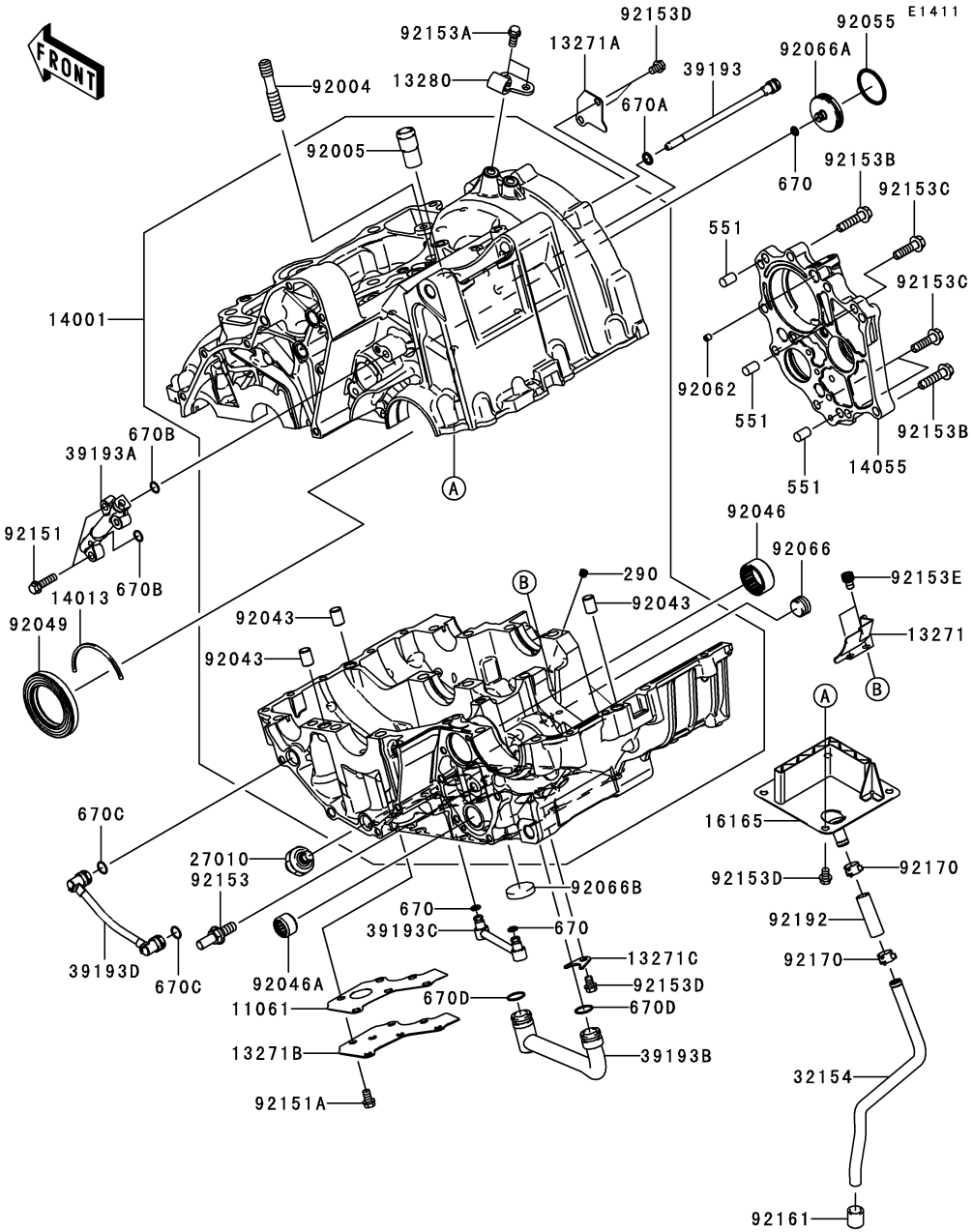

Ref. No.	Part No.	Description	Spec Code	Quantity-ER650				
				’06	’07	’08		
				A6S	A7F	A8F		
551	551A0814	PIN-DOWEL,8X14		3	3			
670	670D1505	O RING		3	3			
670A	670D1508	O RING,8MM		1	1			
670B	670D1509	O RING,9MM		2	2			
670C	670D1510	O RING,10MM		2	2			
670D	670D2014	O RING,14MM		2	2			

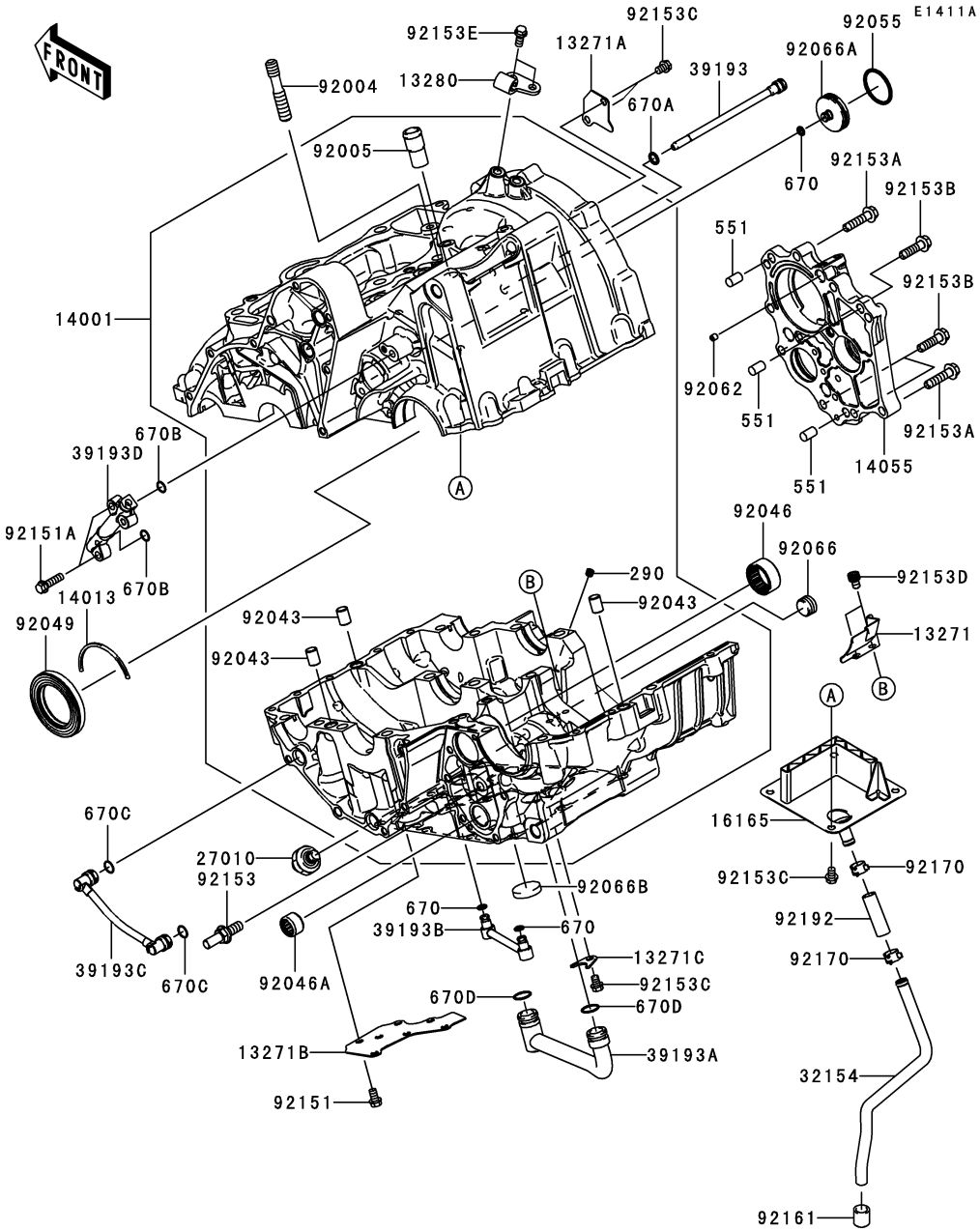

Ref. No.	Part No.	Description	Spec Code	Quantity-ER650 '06 A6S	'07 A7F	'08 A8F		
13271	13271-0575	PLATE,OIL SHIELDING			1	1		
13271A	13271-0577	PLATE			1	1		
13271B	13271-0584	PLATE			1	1		
13271C	13271-1187	PLATE,OIL PIPE			1	1		
13280	13280-0171	HOLDER,CLUTCH CABLE			1	1		
14001	14001-0104	SET-CRANKCASE			1	1		
14013	14013-1004	RING-POSITION,T=1.98			1	1		
14055	14055-0018	CASE-GEAR			1	1		
16165	16165-0001	SEPARATOR,BREATHER			1	1		
27010	27010-1313	SWITCH,OIL PRESSURE			1	1		
32154	32154-0661	PIPE,BREATHER			1	1		
39193	39193-0029	PIPE-OIL			1	1		
39193A	39193-0031	PIPE-OIL			1	1		
39193B	39193-0032	PIPE-OIL			1	1		
39193C	39193-0033	PIPE-OIL			1	1		
39193D	39193-0046	PIPE-OIL			1	1		
92004	92004-0024	STUD,10X34.5			1	1		
92005	92005-1238	FITTING,BREATHER			1	1		
92043	92043-1037	PIN,DOWEL,10X14			3	3		
92046	92046-0017	BEARING-NEEDLE,24BTM3013			1	1		
92046A	92046-1148	BEARING-NEEDLE,HK1312			1	1		
92049	92049-1501	SEAL-OIL,HTC40628			1	1		
92055	92055-0006	RING-O,29.7X2.4			1	1		
92062	92062-1086	NOZZLE,5X6,SILVER			1	1		
92066	92066-0003	PLUG,PT3/8X10			1	1		
92066A	92066-0056	PLUG,INPUT SHAFT			1	1		
92066B	92066-0061	PLUG,25X5			1	1		
92151	92151-1389	BOLT,FLANGED-SMALL,6X10			6	6		
92151A	92151-1937	BOLT,6X22			2	2		
92153	92153-0530	BOLT,8X20			1	1		
92153A	92153-0962	BOLT,FLANGED,6X30			6	6		
92153B	92153-0963	BOLT,FLANGED,7X26			3	3		
92153C	92153-0964	BOLT,FLANGED-SMALL,6X8			7	7		
92153D	92153-1414	BOLT,SOCKET,6X8			2	2		
92153E	92153-1805	BOLT			2	2		
92161	92161-0267	DAMPER			1	1		
92170	92170-1167	CLAMP			2	2		
92192	92192-0225	TUBE,9X12X38			1	1		
290	290Q0606	SCREW-SET-SOCKET,6X6			1	1		
551	551A0814	PIN-DOWEL,8X14			3	3		

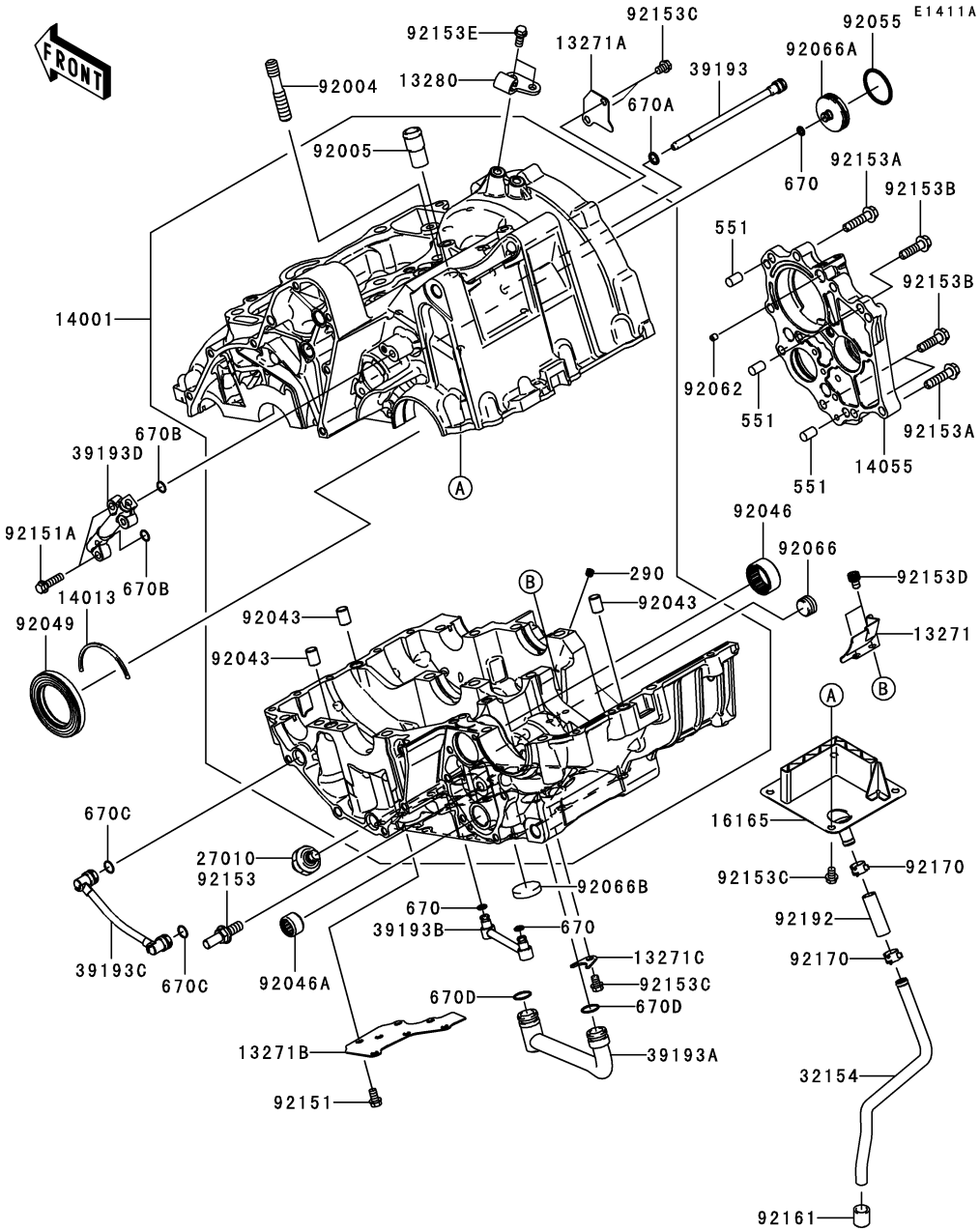

Ref. No.	Part No.	Description	Spec Code	Quantity-ER650				
				’06	’07	’08		
				A6S	A7F	A8F		
670	670D1505	O RING			3	3		
670A	670D1508	O RING,8MM			1	1		
670B	670D1509	O RING,9MM			2	2		
670C	670D1510	O RING,10MM			2	2		
670D	670D2014	O RING,14MM			2	2		

E1412

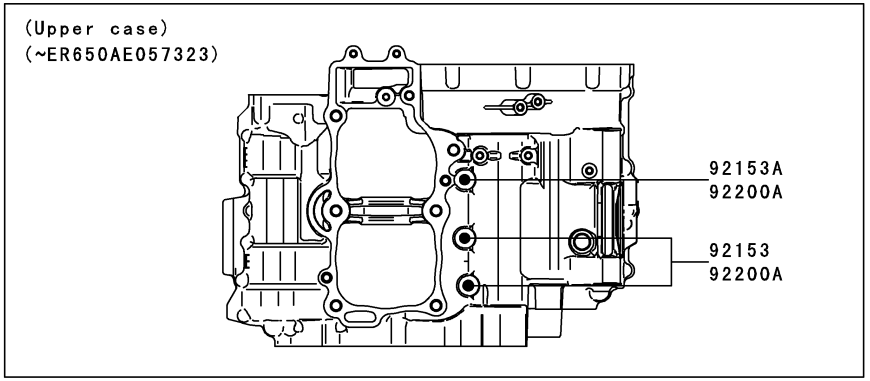

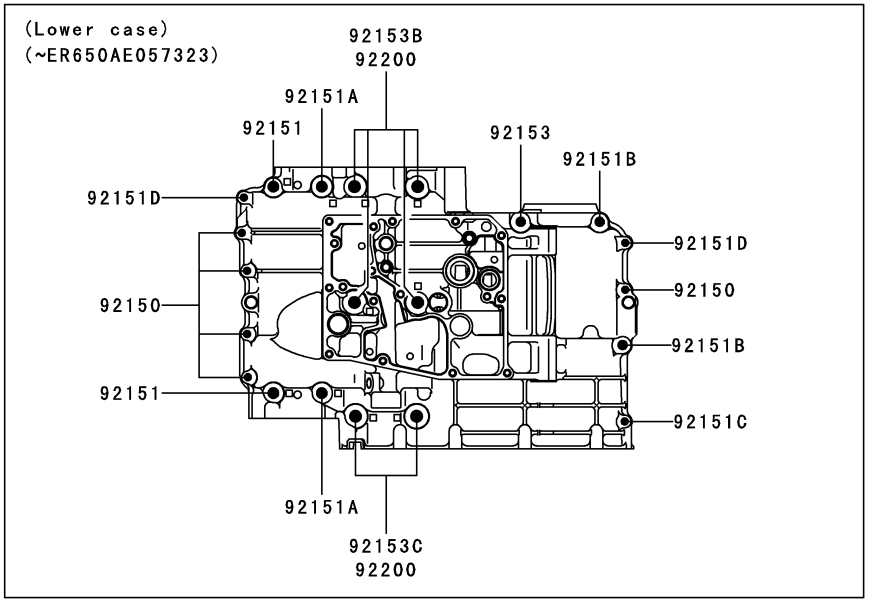

Ref. No.	Part No.	Description	Spec Code	Quantity-ER650				
				’06	’07	’08		
				A6S	A7F	A8F		
92150	92150-1301	BOLT,6X38		5	5			
92151	92151-1461	BOLT,8X60		2	2			
92151A	92151-1462	BOLT,8X73		2	2			
92151B	92151-1463	BOLT,8X50		2	2			
92151C	92151-1464	BOLT,6X32		1	1			
92151D	92151-1465	BOLT,6X45		2	2			
92153	92153-0959	BOLT,FLANGED,8X110		3	3			
92153A	92153-0960	BOLT,FLANGED,8X120		1	1			
92153B	92153-1449	BOLT,FLANGED,9X113		4	4			
92153C	92153-1450	BOLT,FLANGED,9X83		2	2			
92200	92200-0115	WASHER,9.2X19X23		6	6			
92200A	92200-1063	WASHER,8.5X16X1.2		3	3			

E1412A

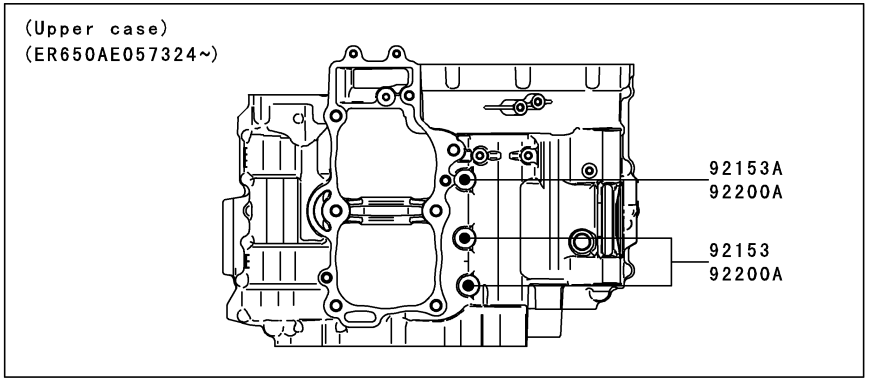

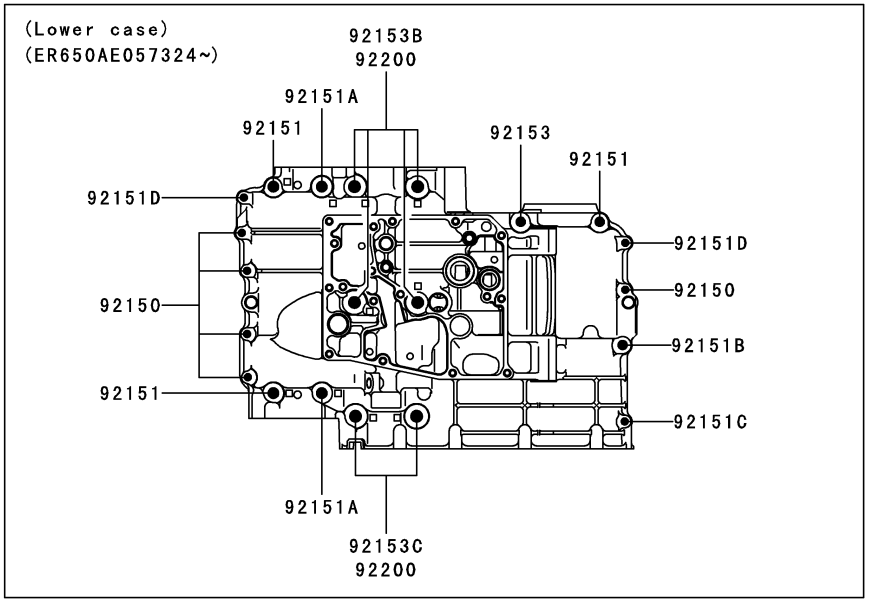

Ref. No.	Part No.	Description	Spec Code	Quantity-ER650				
				’06	’07	’08		
				A6S	A7F	A8F		
92150	92150-1301	BOLT,6X38			5	5		
92151	92151-1461	BOLT,8X60			3	3		
92151A	92151-1462	BOLT,8X73			2	2		
92151B	92151-1463	BOLT,8X50			1	1		
92151C	92151-1464	BOLT,6X32			1	1		
92151D	92151-1465	BOLT,6X45			2	2		
92153	92153-0959	BOLT,FLANGED,8X110			3	3		
92153A	92153-0960	BOLT,FLANGED,8X120			1	1		
92153B	92153-1449	BOLT,FLANGED,9X113			4	4		
92153C	92153-1450	BOLT,FLANGED,9X83			2	2		
92200	92200-0115	WASHER,9.2X19X23			6	6		
92200A	92200-1063	WASHER,8.5X16X1.2			3	3		

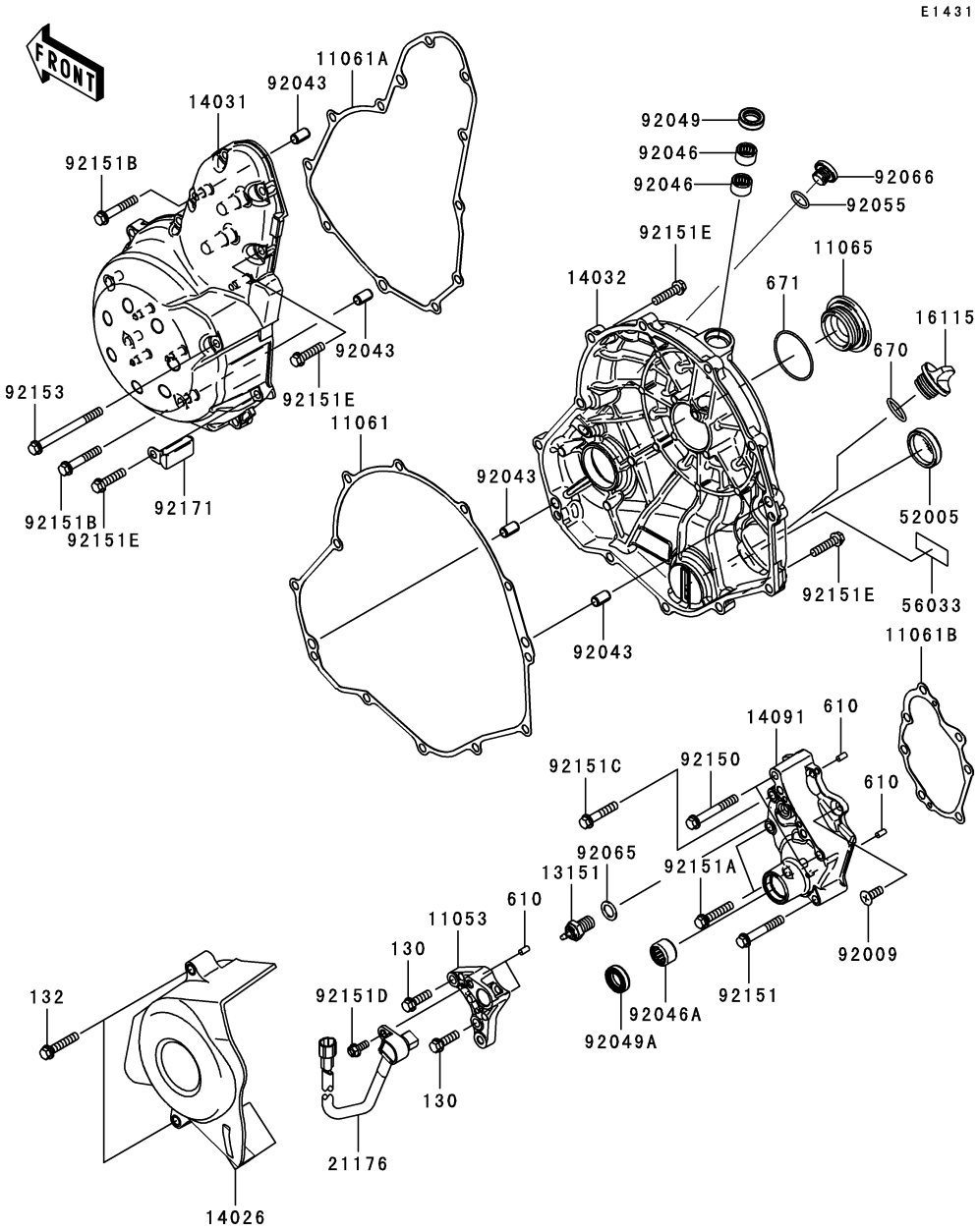

Ref. No.	Part No.	Description	Spec Code	Quantity-ER650 '06 A6S	'07 A7F	'08 A8F		
11053	11053-1739	BRACKET		1	1	1		
11061	11061-0164	GASKET,CLUTCH COVER		1	1	1		
11061A	11061-0165	GASKET,GENERATOR COVER		1	1	1		
11061B	11061-0166	GASKET,TRANSMISSION COVER		1	1	1		
11065	11065-0150	CAP		1	1	1		
13151	13151-1080	SWITCH-COMP,NEUTRAL		1	1	1		
14026	14026-0021	COVER-CHAIN		1	1	1		
14031	14031-0058	COVER-GENERATOR		1	1	1		
14032	14032-0084	COVER-CLUTCH		1	1	1		
14091	14091-0445	COVER,TRANSMISSION		1	1	1		
16115	16115-1053	CAP-OIL FILLER		1	1	1		
21176	21176-0065	SENSOR,SPEED		1	1	1		
52005	52005-1057	GAUGE,OIL LEVEL		1	1	1		
56033	56033-0131	LABEL-MANUAL,OIL CAPACITY		1	1	1		
92009	92009-1360	SCREW,6X16		1	1	1		
92043	92043-1263	PIN,6.2X8X14		4	4	4		
92046	92046-1010	BEARING-NEEDLE,HK1210		2	2	2		
92046A	92046-1148	BEARING-NEEDLE,HK1312		1	1	1		
92049	92049-1475	SEAL-OIL,CLUTCH RELEASE		1	1	1		
92049A	92049-1519	SEAL-OIL,TC13225.5		1	1	1		
92055	92055-1011	RING-O,13.0X1.9		1	1	1		
92065	92065-058	GASKET,10.5X16X1		1	1	1		
92066	92066-0073	PLUG		1	1	1		
92150	92150-1884	BOLT,6X45		2	2	2		
92151	92151-1131	BOLT,6X40		1	1	1		
92151A	92151-1134	BOLT,6X30		2	2	2		
92151B	92151-1135	BOLT,6X35		2	2	2		
92151C	92151-1201	BOLT,6X30		1	1	1		
92151D	92151-1305	BOLT,FLANGED,5X12		1	1	1		
92151E	92151-1930	BOLT,FLANGED-SMALL,6X25		21	21	21		
92153	92153-0018	BOLT,FLANGED,6X70		1	1	1		
92171	92171-0911	CLAMP		1	1	1		
130	130BA0620	BOLT-FLANGED,6X20		2	2	2		
132	132BB0630	BOLT-FLANGED-SMALL,6X30		2	2	2		
610	610A0408	ROLLER,4X8		4	4	4		
670	670B2020	O RING,20MM		1	1	1		
671	671B2540	O RING,40MM		1	1	1		

E1434

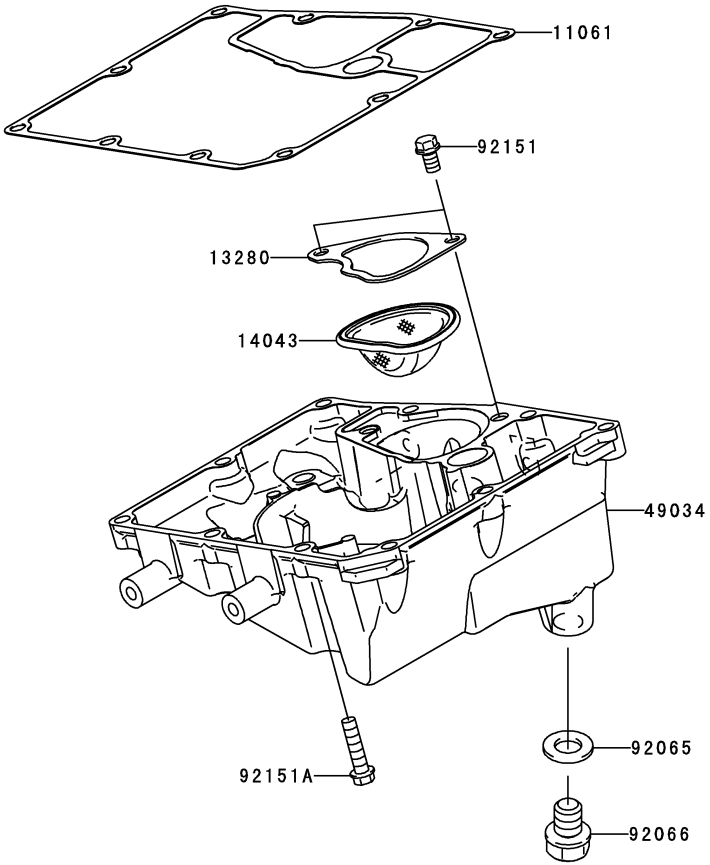

Ref. No.	Part No.	Description	Spec Code	Quantity-ER650 '06 A6S	'07 A7F	'08 A8F		
11061	11061-0167	GASKET,OIL PAN		1	1	1		
13280	13280-0134	HOLDER,OIL FILTER		1	1	1		
14043	14043-0008	FILTER,OIL(SCAVENGE)		1	1	1		
49034	49034-0014	PAN-OIL		1	1	1		
92065	92065-097	GASKET,12X22X2		1	1	1		
92066	92066-0069	PLUG,DRAIN,12X22		1	1	1		
92151	92151-1389	BOLT,FLANGED-SMALL,6X10		2	2	2		
92151A	92151-1930	BOLT,FLANGED-SMALL,6X25		10	10	10		

E1510

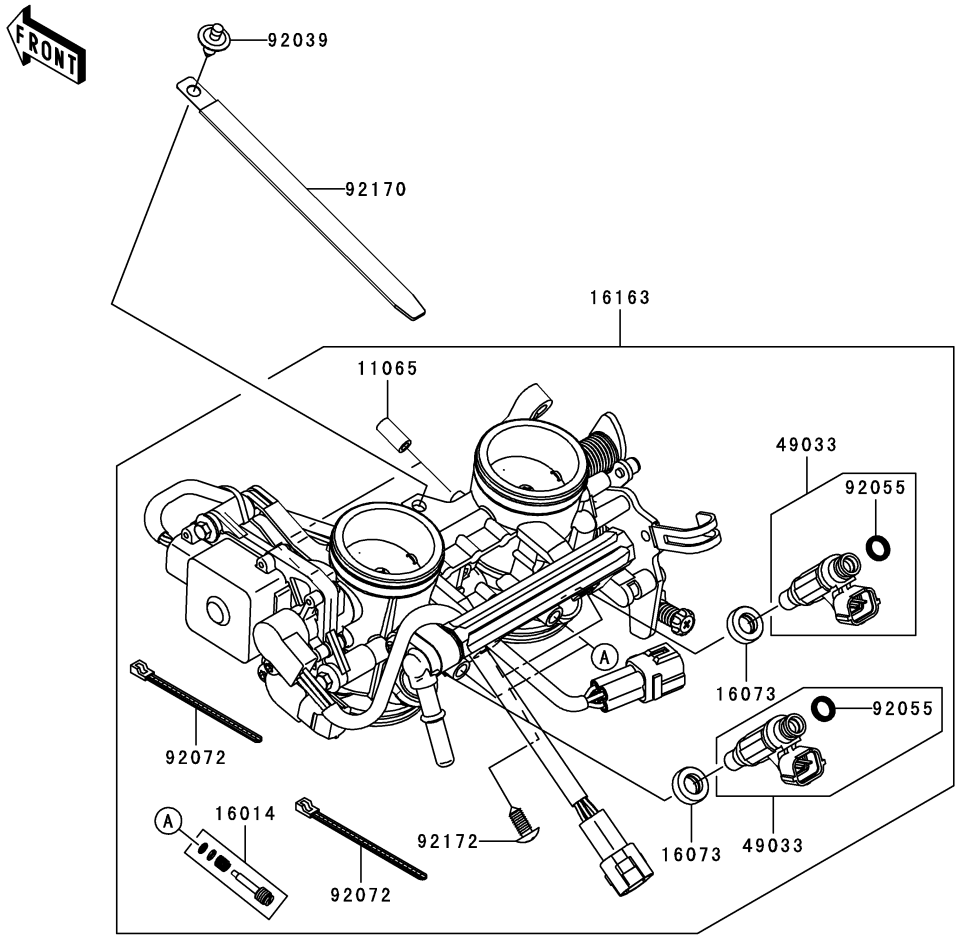

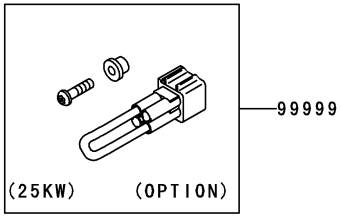

Ref. No.	Part No.	Description	Spec Code	Quantity-ER650 '06 A6S	'07 A7F	'08 A8F		
11065	11065-0018	CAP		2	2	2		
16014	16014-0002	SCREW-PILOT AIR		2	2	2		
16073	16073-3707	INSULATOR		2	2	2		
16163	16163-0099	THROTTLE-ASSY,TTK38		1	1	1		
49033	49033-0011	NOZZLE-INJECTION		2	2	2		
92039	92039-0068	RIVET		1	1	1		
92055	92055-1622	RING-O,INJECTION NOZZLE		2	2	2		
92072	92072-0012	BAND,SUB-HARNESS		2	2	2		
92170	92170-1114	CLAMP,L=150		1	1	1		
92172	92172-0064	SCREW,PIPE INJECTION		2	2	2		
99999	99999-0076 (OPTION)	KIT.,25KW		1	1	1		

GRID NO. **C-13**

This grid covers:
Fuel Pump

E1520

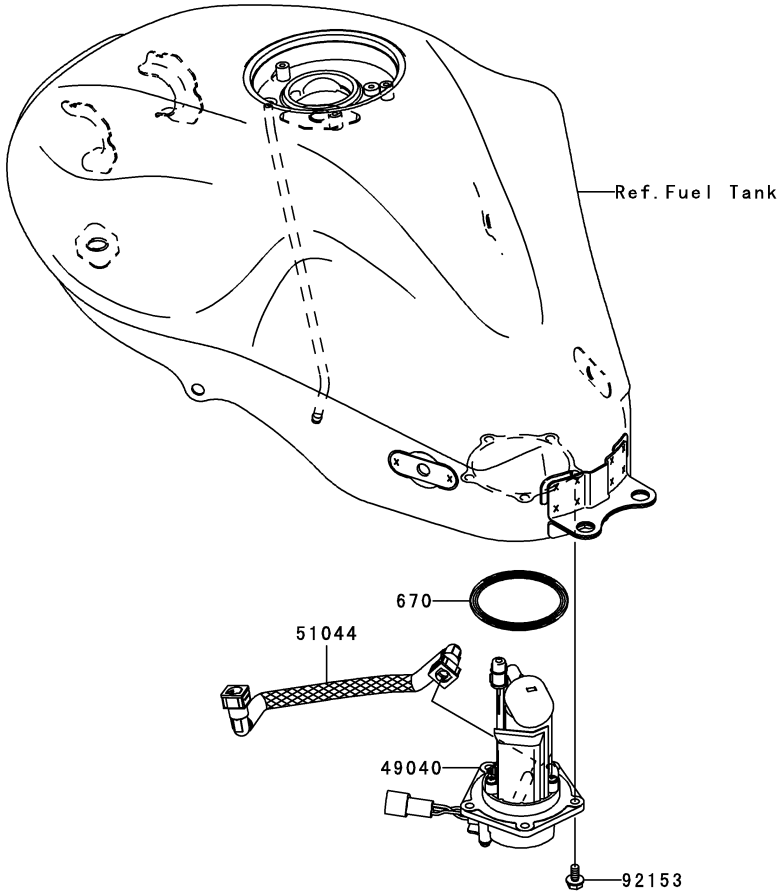

Ref. No.	Part No.	Description	Spec Code	Quantity-ER650				
				’06	’07	’08		
				A6S	A7F	A8F		
49040	49040-0026	PUMP-FUEL		1	1	1		
51044	51044-0029	TUBE-ASSY		1	1	1		
92153	92153-1283	BOLT,FLANGED,6X12		5	5	5		
670	670E5065	O RING		1	1	1		

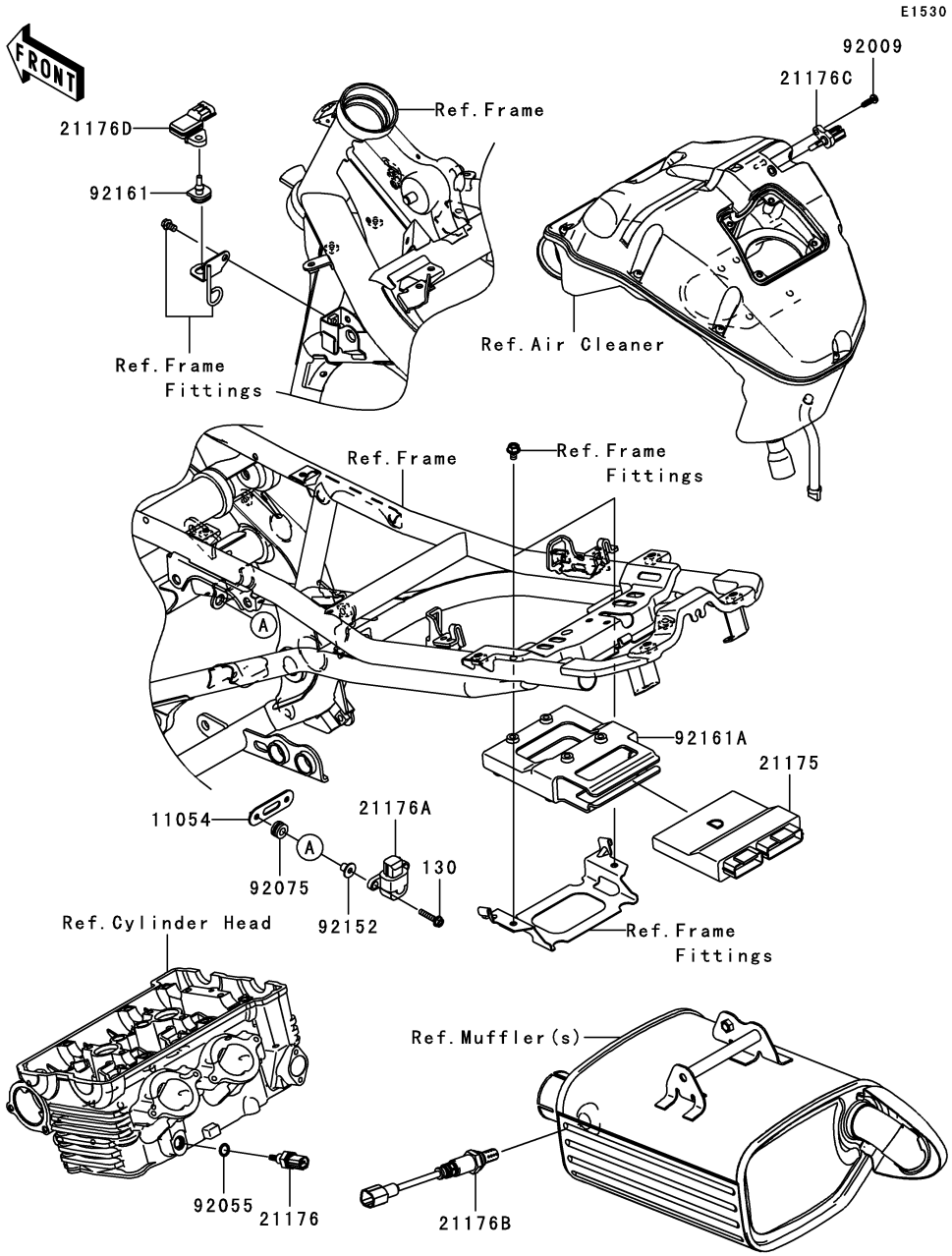

Ref. No.	Part No.	Description	Spec Code	Quantity-ER650 '06 A6S	'07 A7F	'08 A8F		
11054	11054-0133	BRACKET		1	1	1		
21175	21175-0077	CONTROL UNIT-ELECTRONIC		1	1	1		
21176	21176-0009	SENSOR,WATER TEMP		1	1	1		
21176A	21176-0026	SENSOR,VEHICLE-DOWN		1	1	1		
21176B	21176-0035	SENSOR,OXYGEN		1	1	1		
21176C	21176-0048	SENSOR,AIR TEMPERATURE		1	1	1		
21176D	21176-0058	SENSOR,PRESSURE		1	1	1		
92009	92009-1984	SCREW,TAPPING,5X16		1	1	1		
92055	92055-0016	RING-O,9.5X1.9		1	1	1		
92075	92075-1912	DAMPER		2	2	2		
92152	92152-0134	COLLAR		2	2	2		
92161	92161-0041	DAMPER		1	1	1		
92161A	92161-0179	DAMPER		1	1	1		
130	130BB0525	BOLT-FLANGED,5X25		2	2	2		

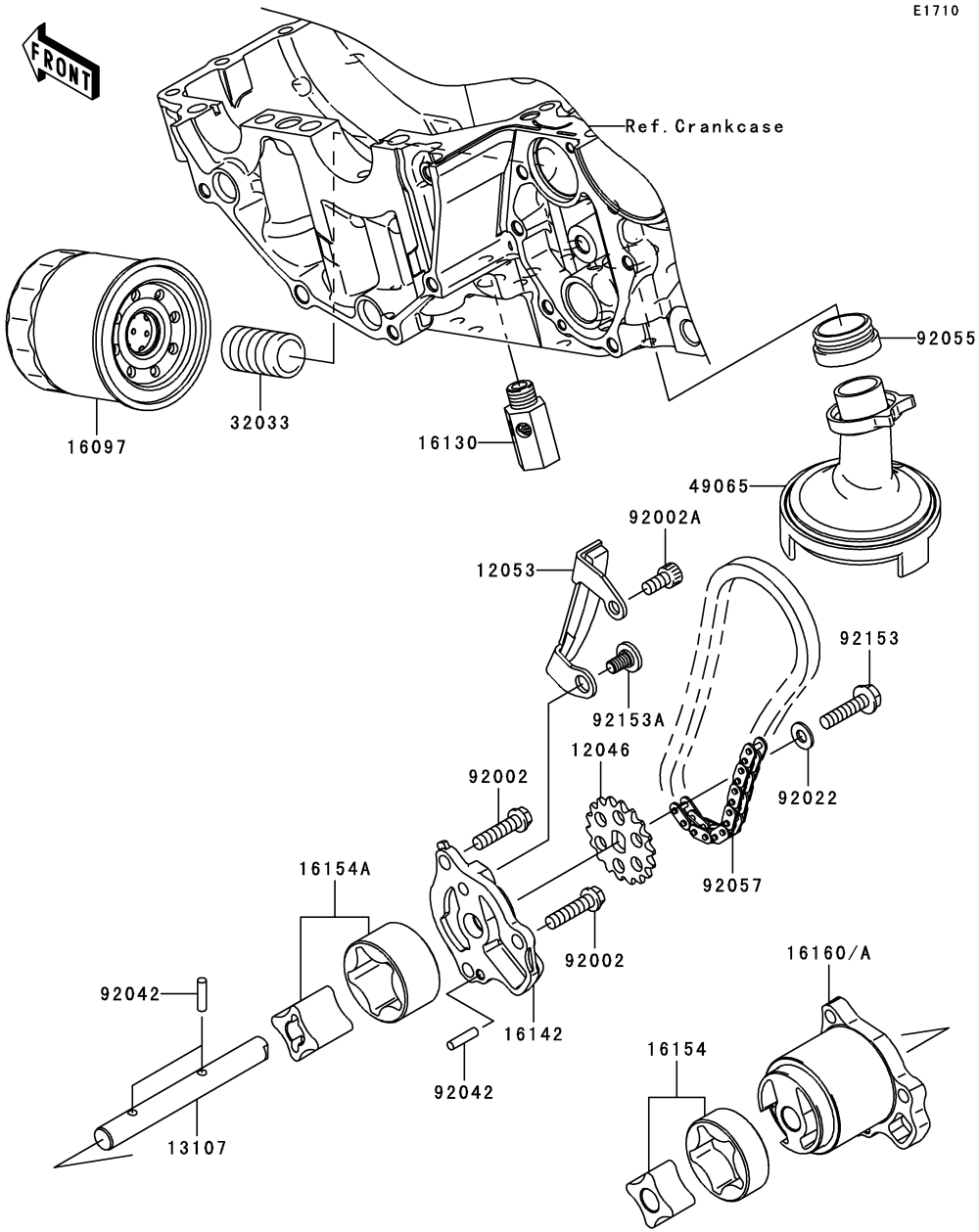

Ref. No.	Part No.	Description	Spec Code	Quantity-ER650 '06 A6S	'07 A7F	'08 A8F		
12046	12046-0040	SPROCKET,18T,BF04M		1	1	1		
12053	12053-0071	GUIDE-CHAIN		1	1	1		
13107	13107-0156	SHAFT,OIL PUMP		1	1	1		
16097	16097-0004	FILTER-ASSY-OIL		1	1	1		
16130	16130-1058	VALVE-ASSY-RELIEF		1	1	1		
16142	16142-0024	COVER-PUMP		1	1	1		
16154	16154-0037	ROTOR-PUMP,L=14		1	1	1		
16154A	16154-1115	ROTOR-PUMP,40.56X22		1	1	1		
16160	16160-0083	BODY,OIL PUMP		1				
16160A	16160-0110	BODY			1	1		
32033	32033-1535	PIPE,OIL FILTER		1	1	1		
49065	49065-0011	FILTER-OIL		1	1	1		
92002	92002-1344	BOLT,6X25		3	3	3		
92002A	92002-1796	BOLT,SOCKET,6X12		1	1	1		
92022	92022-1827	WASHER,6X12.8X1.2		1	1	1		
92042	92042-014	PIN,DOWEL,4X15.8		3	3	3		
92055	92055-1354	RING-O,OIL FILTER		1	1	1		
92057	92057-0098	CHAIN,DID 215FD-DHA,56LE		1	1	1		
92153	92153-0952	BOLT,FLANGED,6X25		1	1	1		
92153A	92153-0969	BOLT,SOCKET,6X11		1	1	1		

E1810

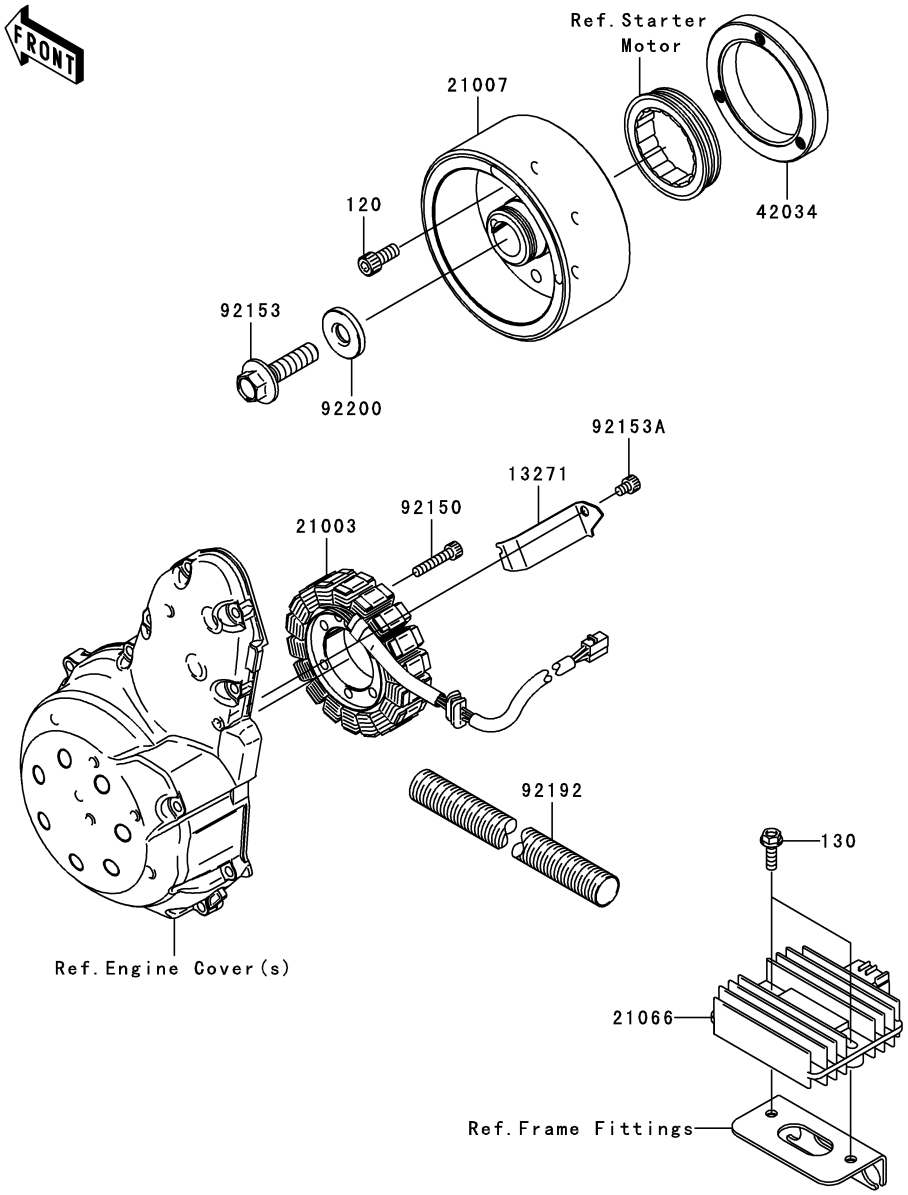

Ref. No.	Part No.	Description	Spec Code	Quantity-ER650				
				’06	’07	’08		
				A6S	A7F	A8F		
13271	13271-0574	PLATE		1	1	1		
21003	21003-0041	STATOR		1	1	1		
21007	21007-0075	ROTOR		1	1	1		
21066	21066-1127	REGULATOR-VOLTAGE		1	1	1		
42034	42034-1143	COUPLING		1	1	1		
92150	92150-1433	BOLT,SOCKET,6X30		3	3	3		
92153	92153-0951	BOLT,FLANGED,12X45		1	1	1		
92153A	92153-1414	BOLT,SOCKET,6X8		1	1	1		
92192	92192-0315	TUBE,CORRUGATED,L=175		1	1	1		
92200	92200-0220	WASHER,12X33X5		1	1	1		
120	120CA0818	BOLT-SOCKET,8X18		3	3	3		
130	130BB0620	BOLT-FLANGED,6X20		2	2	2		

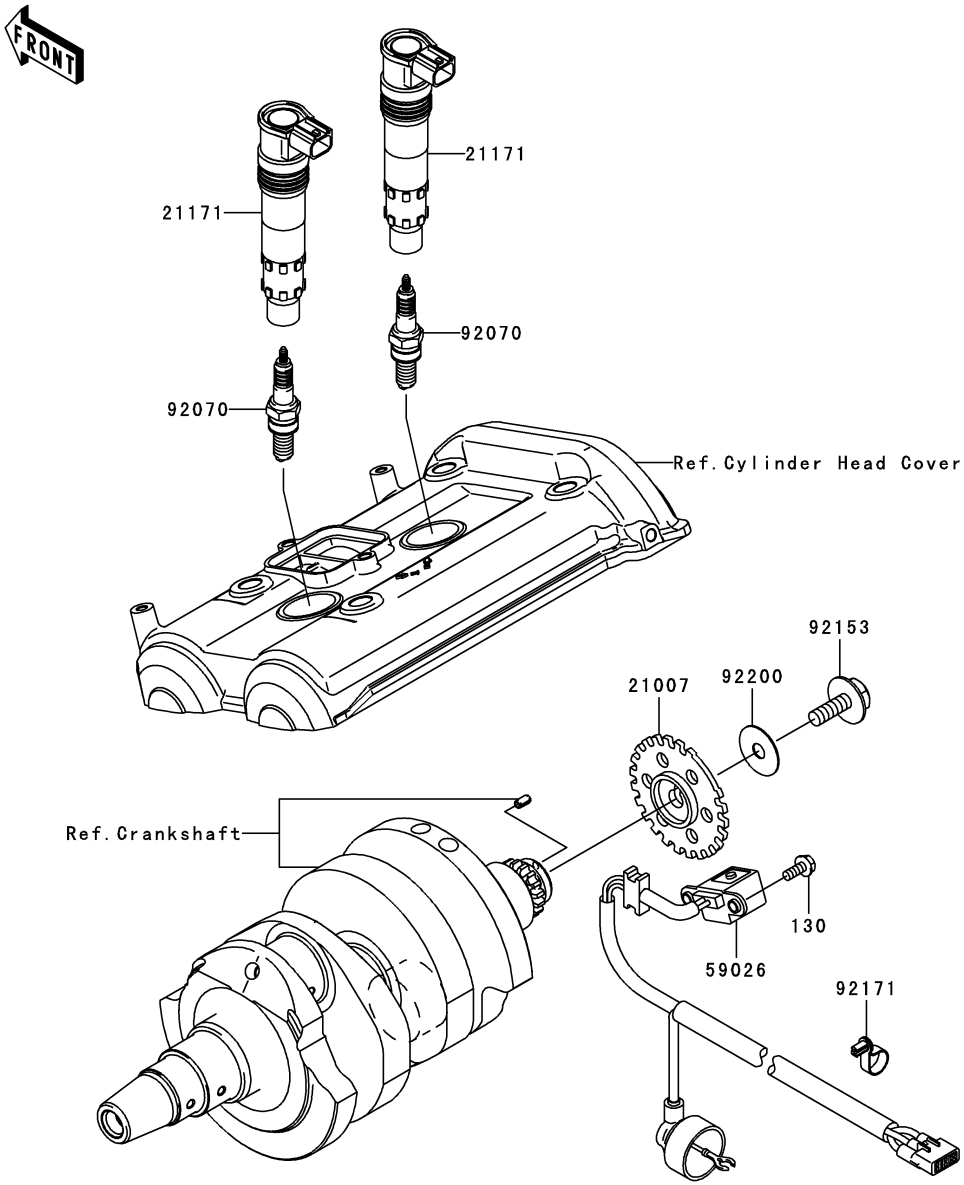

Ref. No.	Part No.	Description	Spec Code	Quantity-ER650 '06 A6S	'07 A7F	'08 A8F		
21007	21007-0053	ROTOR,PULSING		1	1	1		
21171	21171-1286	COIL-ASSY-IGNITION		2	2	2		
59026	59026-0018	COIL-PULSING		1	1	1		
92070	92070-0014	PLUG-SPARK,CR9EIA(NGK)		AR	AR	AR		
92153	92153-0549	BOLT,FLANGED,8X23		1	1	1		
92171	92171-0836	CLAMP,SPEED		1	1	1		
92200	92200-0274	WASHER,8.5X28X0.8		1	1	1		
130	130BA0512	BOLT-FLANGED,5X12		2	2	2		

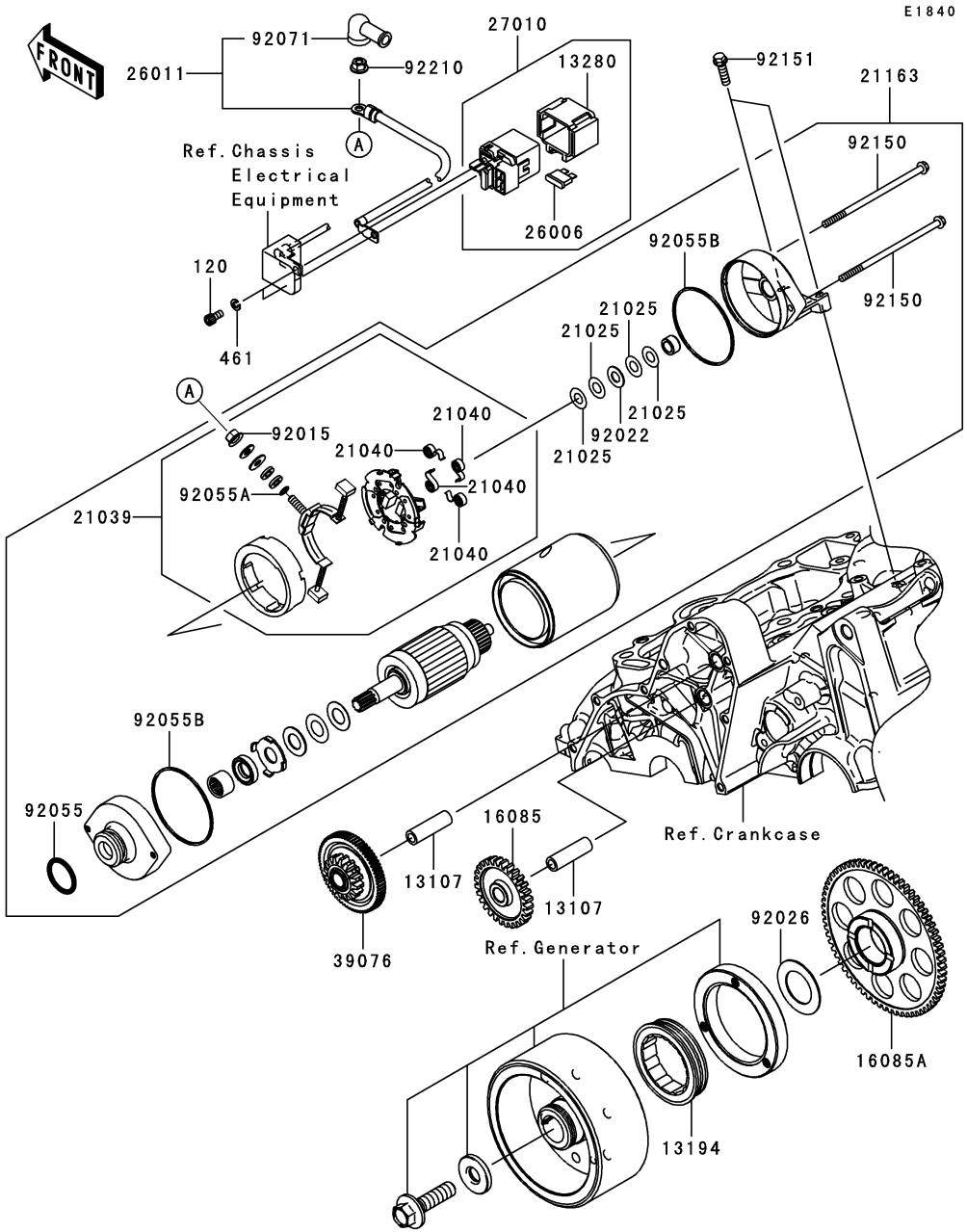

Ref. No.	Part No.	Description	Spec Code	Quantity-ER650 '06 A6S	'07 A7F	'08 A8F		
13107	13107-1106	SHAFT,IDLE GEAR		2	2			
13194	13194-1083	CLUTCH-ONEWAY		1	1			
13280	13280-1263	HOLDER		1	1			
16085	16085-0074	GEAR,IDLE,28T		1	1			
16085A	16085-0076	GEAR,67T		1	1			
21025	21025-011	WASHER,9.1X18X0.2		AR	AR			
21039	21039-1060	BRUSH,CARBON		1	1			
21040	21040-1055	SPRING-BRUSH		4	4			
21163	21163-0027	STARTER-ELECTRIC		1	1			
26006	26006-1006	FUSE,30A-G		1	1			
26011	26011-0083	WIRE-LEAD		1	1			
27010	27010-1446	SWITCH,MAGNETIC		1	1			
39076	39076-0006	LIMITER,16T&66T		1	1			
92015	92015-1476	NUT,STARTER MOTOR		1	1			
92022	92022-1132	WASHER,9.1X18X0.8		1	1			
92026	92026-087	SPACER,29.1X47.5X1.2		1	1			
92055	92055-1276	RING-O		1	1			
92055A	92055-1370	RING-O,4.5X2.0		1	1			
92055B	92055-1381	RING-O,STARTER MOTOR		2	2			
92071	92071-0024	GROMMET		1	1			
92150	92150-1143	BOLT,5X110		2	2			
92151	92151-1937	BOLT,6X22		2	2			
92210	92210-0188	NUT,6MM		1	1			
120	120CB0510	BOLT-SOCKET,5X10		2	2			
461	461K0500	WASHER-SPRING,5MM,BLACK		2	2			

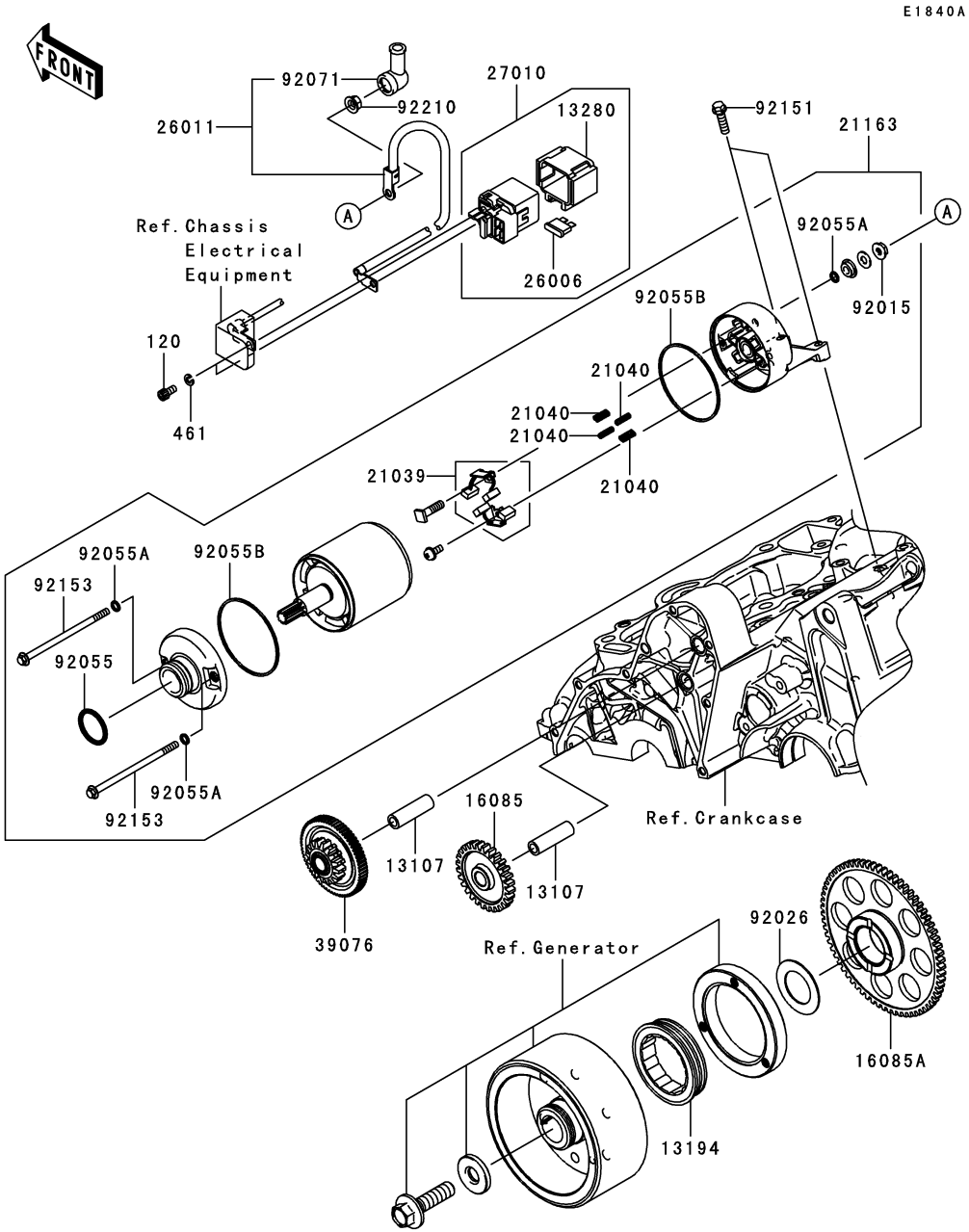

Ref. No.	Part No.	Description	Spec Code	Quantity-ER650 '06 A6S	'07 A7F	'08 A8F		
13107	13107-1106	SHAFT,IDLE GEAR			2	2		
13194	13194-1083	CLUTCH-ONEWAY			1	1		
13280	13280-1263	HOLDER			1	1		
16085	16085-0074	GEAR,IDLE,28T			1	1		
16085A	16085-0076	GEAR,67T			1	1		
21039	21039-0004	BRUSH,CARBON			1	1		
21040	21040-0003	SPRING-BRUSH			4	4		
21163	21163-0040	STARTER-ELECTRIC			1	1		
26006	26006-1006	FUSE,30A-G			1	1		
26011	26011-0083	WIRE-LEAD			1	1		
27010	27010-1446	SWITCH,MAGNETIC			1	1		
39076	39076-0006	LIMITER,16T&66T			1	1		
92015	92015-1476	NUT,STARTER MOTOR			1	1		
92026	92026-087	SPACER,29.1X47.5X1.2			1	1		
92055	92055-1276	RING-O			1	1		
92055A	92055-1370	RING-O,4.5X2.0			3	3		
92055B	92055-1381	RING-O,STARTER MOTOR			2	2		
92071	92071-0024	GROMMET			1	1		
92151	92151-1937	BOLT,6X22			2	2		
92153	92153-1783	BOLT			2	2		
92210	92210-0188	NUT,6MM			1	1		
120	120CB0510	BOLT-SOCKET,5X10			2	2		
461	461K0500	WASHER-SPRING,5MM,BLACK			2	2		

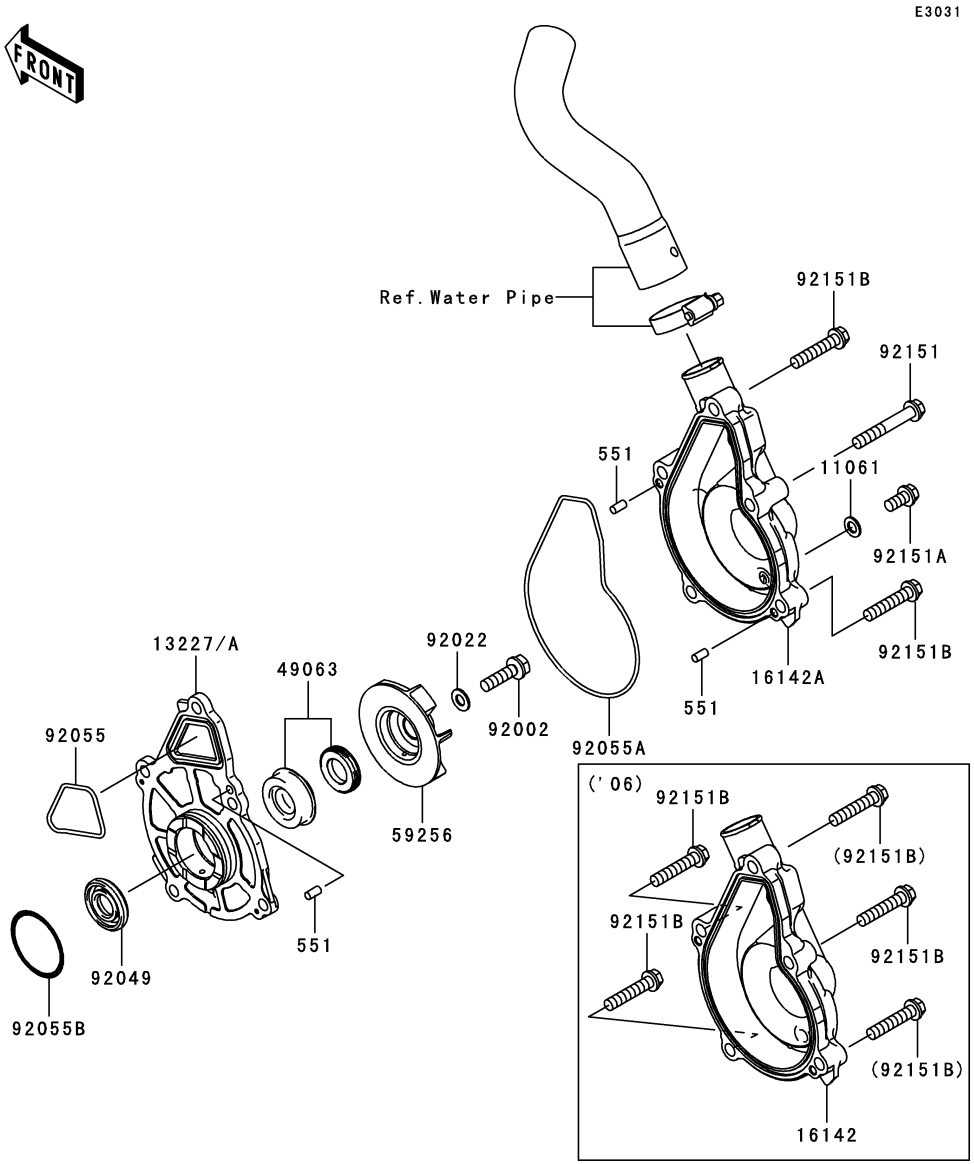

Ref. No.	Part No.	Description	Spec Code	Quantity-ER650 '06 A6S	'07 A7F	'08 A8F		
11061	11061-0107	GASKET		1	1	1		
13227	13227-0011	HOUSING		1				
13227A	13227-0012	HOUSING			1	1		
16142	16142-0025	COVER-PUMP		1				
16142A	16142-0047	COVER-PUMP			1	1		
49063	49063-1055	SEAL-MECHANICAL,WATER		1	1	1		
59256	59256-0007	IMPELLER		1	1	1		
92002	92002-1154	BOLT,6X22		1	1	1		
92022	92022-077	WASHER,6.1X12X1		1	1	1		
92049	92049-1259	SEAL-OIL,SC12 28.555		1	1	1		
92055	92055-0082	RING-O,CASE-HOUSING		1	1	1		
92055A	92055-0083	RING-O,HOUSING-PUMP COVER		1	1	1		
92055B	92055-1155	RING-O,33.2MM		1	1	1		
92151	92151-1131	BOLT,6X40			3	3		
92151A	92151-1133	BOLT,6X12		1	1	1		
92151B	92151-1134	BOLT,6X30		5	2	2		
551	551A0408	PIN-DOWEL,4X8		3	3	3		

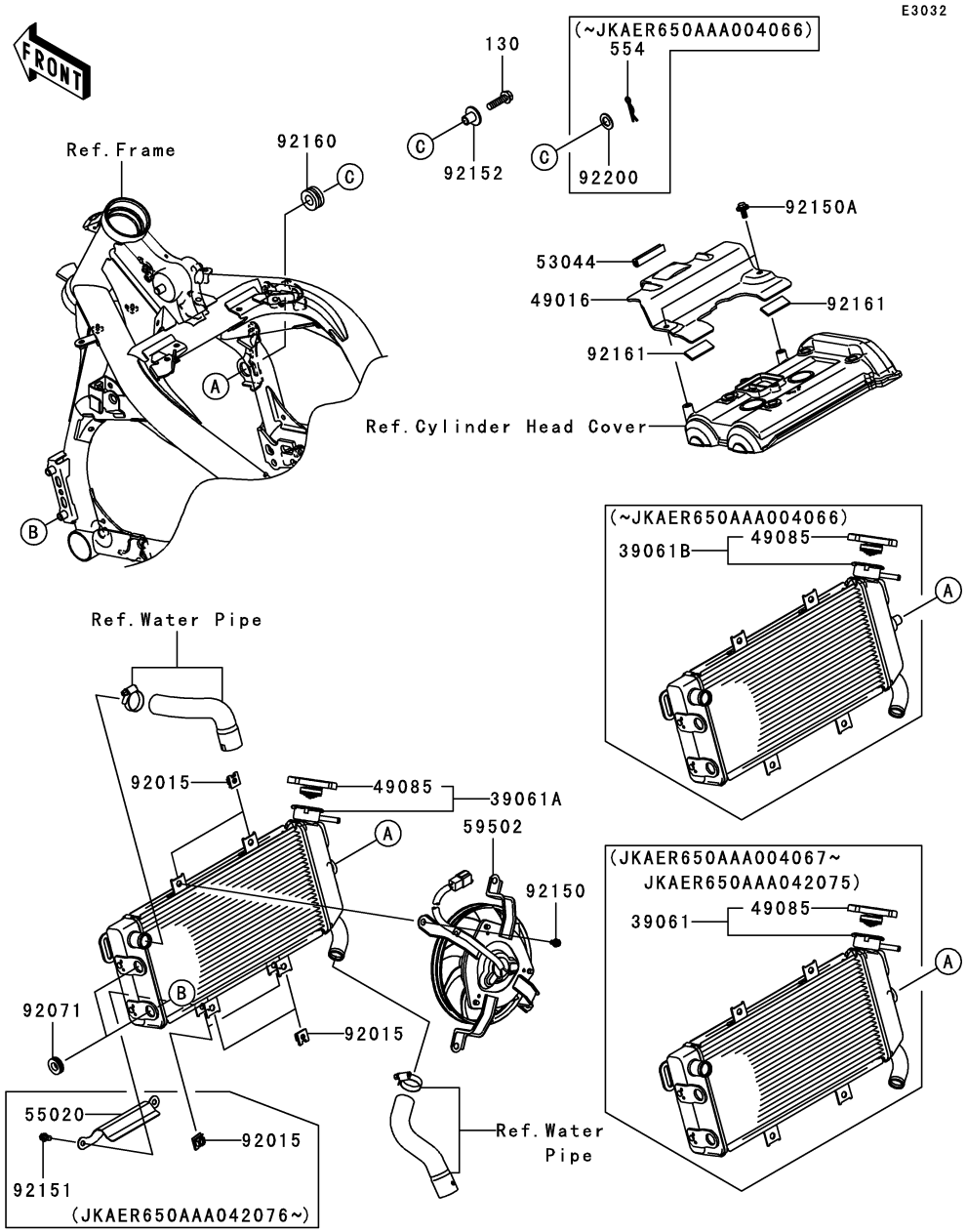

Ref. No.	Part No.	Description	Spec Code	Quantity-ER650 '06 A6S	'07 A7F	'08 A8F		
39061	39061-0066	RADIATOR-ASSY		1	1			
	(	JKAER650AAA004067 -	JKAER650AAA042075)					
39061A	39061-0110	RADIATOR-ASSY			1	1		
	(	JKAER650AAA042076 -	)					
39061B	39061-5001	RADIATOR-ASSY		1				
	(	-	JKAER650AAA004066)					
49016	49016-0030	COVER-SEAL,HOT WIND		1	1	1		
49085	49085-1078	CAP-ASSY-PRESSURE		1	1	1		
53044	53044-1185	TRIM,L=50		1	1	1		
55020	55020-0343	GUARD			1	1		
	(	JKAER650AAA042076 -	)					
59502	59502-0019	FAN-ASSY		1	1	1		
92015	92015-1487	NUT		4	6	6		
92071	92071-1115	GROMMET		2	2	2		
92150	92150-1186	BOLT,6X12		4	4	4		
92150A	92150-1689	BOLT,FLANGED,6X14		2	2	2		
92151	92151-1277	BOLT,6X10			2	2		
	(	JKAER650AAA042076 -	)					
92152	92152-0398	COLLAR		1	1	1		
	(	JKAER650AAA004067 -	)					
92160	92160-1007	DAMPER		1	1	1		
92161	92161-0301	DAMPER		2	2	2		
92200	92200-1174	WASHER,12.5X22X1.2		1				
	(	-	JKAER650AAA004066)					
130	130BA0830	BOLT-FLANGED,8X30		1	1	1		
	(	JKAER650AAA004067 -	)					
554	554A1200	PIN-SNAP,12MM		1				
	(	-	JKAER650AAA004066)					

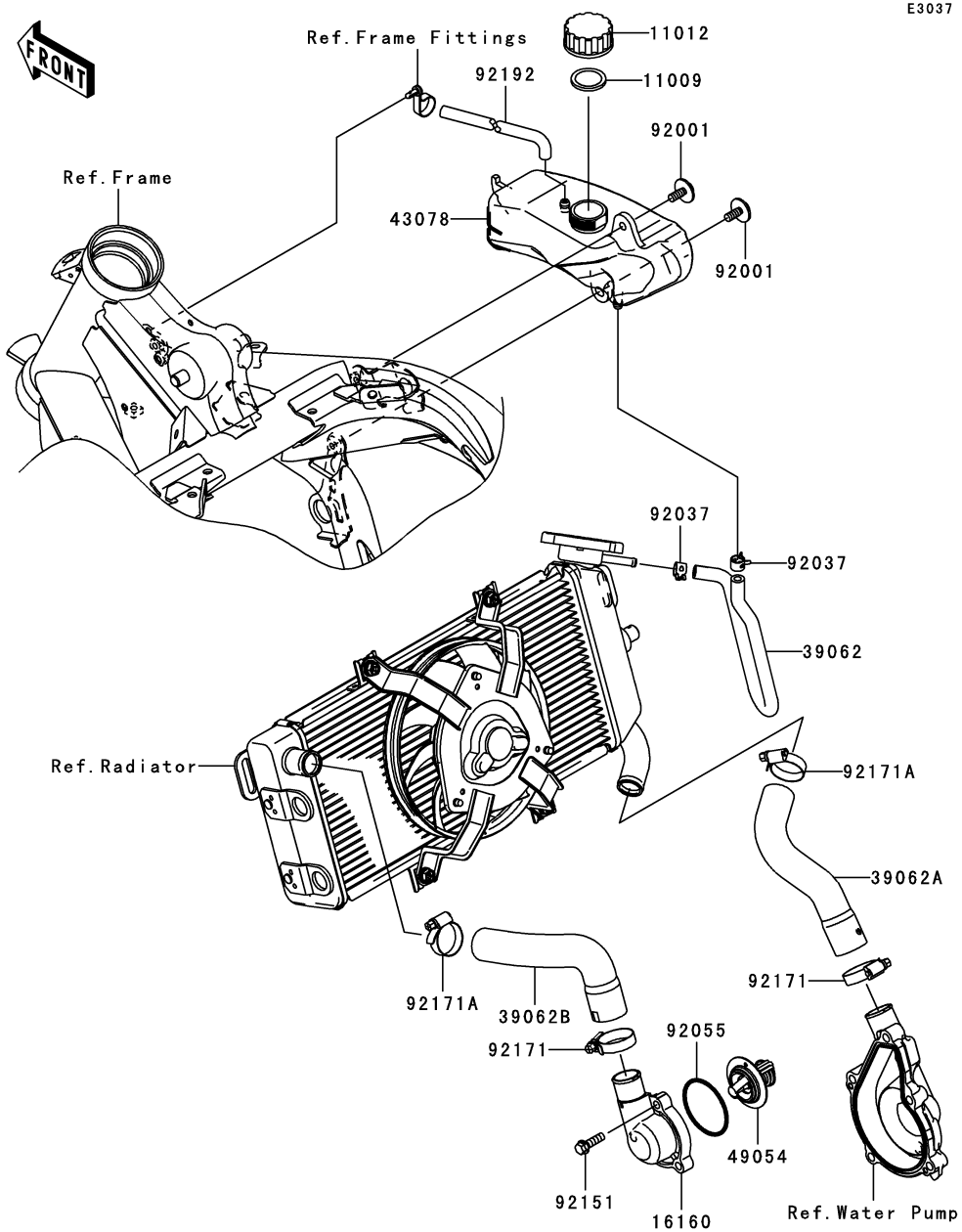

Ref. No.	Part No.	Description	Spec Code	Quantity-ER650 '06 A6S	'07 A7F	'08 A8F		
11009	11009-1145	GASKET,RESERVOIR TANK CAP		1	1	1		
11012	11012-1084	CAP		1	1	1		
16160	16160-0084	BODY,THERMOSTAT		1	1	1		
39062	39062-0094	HOSE-COOLING,RAD-RESERVOIR		1	1	1		
39062A	39062-0096	HOSE-COOLING,W.PUMP-RAD		1	1	1		
39062B	39062-0135	HOSE-COOLING,THERMO-RAD		1	1	1		
43078	43078-0025	RESERVOIR		1	1	1		
49054	49054-0001	THERMOSTAT		1	1	1		
92001	92001-1950	BOLT,6X16		2	2	2		
92037	92037-1505	CLAMP,TUBE		2	2	2		
92055	92055-1279	RING-O,44.7X2.4		1	1	1		
92151	92151-1252	BOLT,FLANGED-SMALL,6X20		3	3	3		
92171	92171-0261	CLAMP		2	2	2		
92171A	92171-0337	CLAMP		2	2	2		
92192	92192-0307	TUBE,BREATHER		1	1	1		

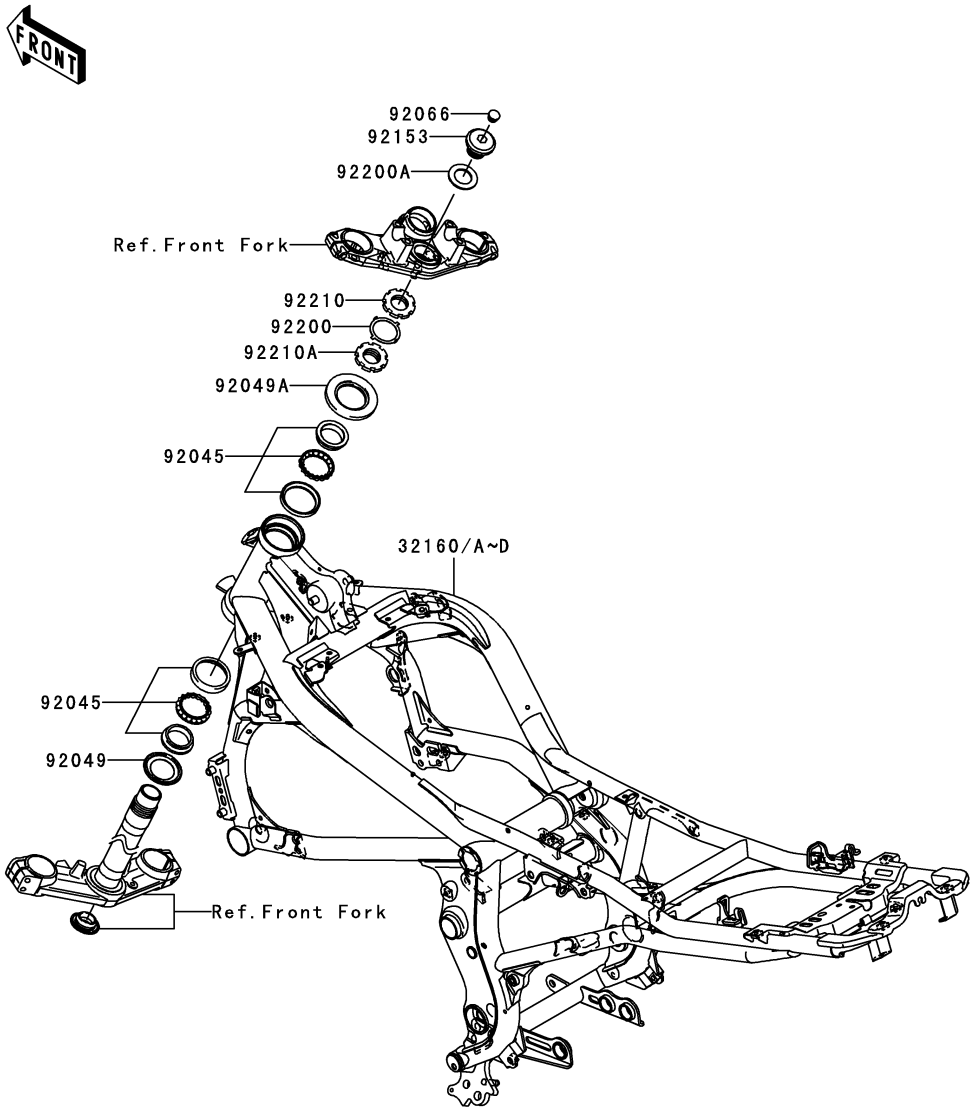

F2120

Ref. No.	Part No.	Description	Spec Code	Quantity-ER650 '06 A6S	'07 A7F	'08 A8F		
32160	32160-0131-11E	FRAME-COMP,F.S.BLACK			1			
32160A	32160-0131-793	FRAME-COMP,M.BRONZE		1				
32160B	32160-0131-796	FRAME-COMP,P.RED		1	1			
32160C	32160-0268-18R	FRAME-COMP,BLACK				1		
32160D	32160-0268-458	FRAME-COMP,P.SILVER				1		
92045	92045-1384	BEARING-BALL,SF07A17PX1V1		2	2	2		
92049	92049-0022	SEAL-OIL,DS35X55X4		1	1	1		
92049A	92049-1483	SEAL-OIL,MX043N2		1	1	1		
92066	92066-0071	PLUG		1	1	1		
92153	92153-0474	BOLT,26MM		1	1	1		
92200	92200-0036	WASHER		1	1	1		
92200A	92200-0081	WASHER,27X42X2.3		1	1	1		
92210	92210-0062	NUT,STEERING STEM 35MM		1	1	1		
92210A	92210-0077	NUT,STEERING STEM,35MM		1	1	1		

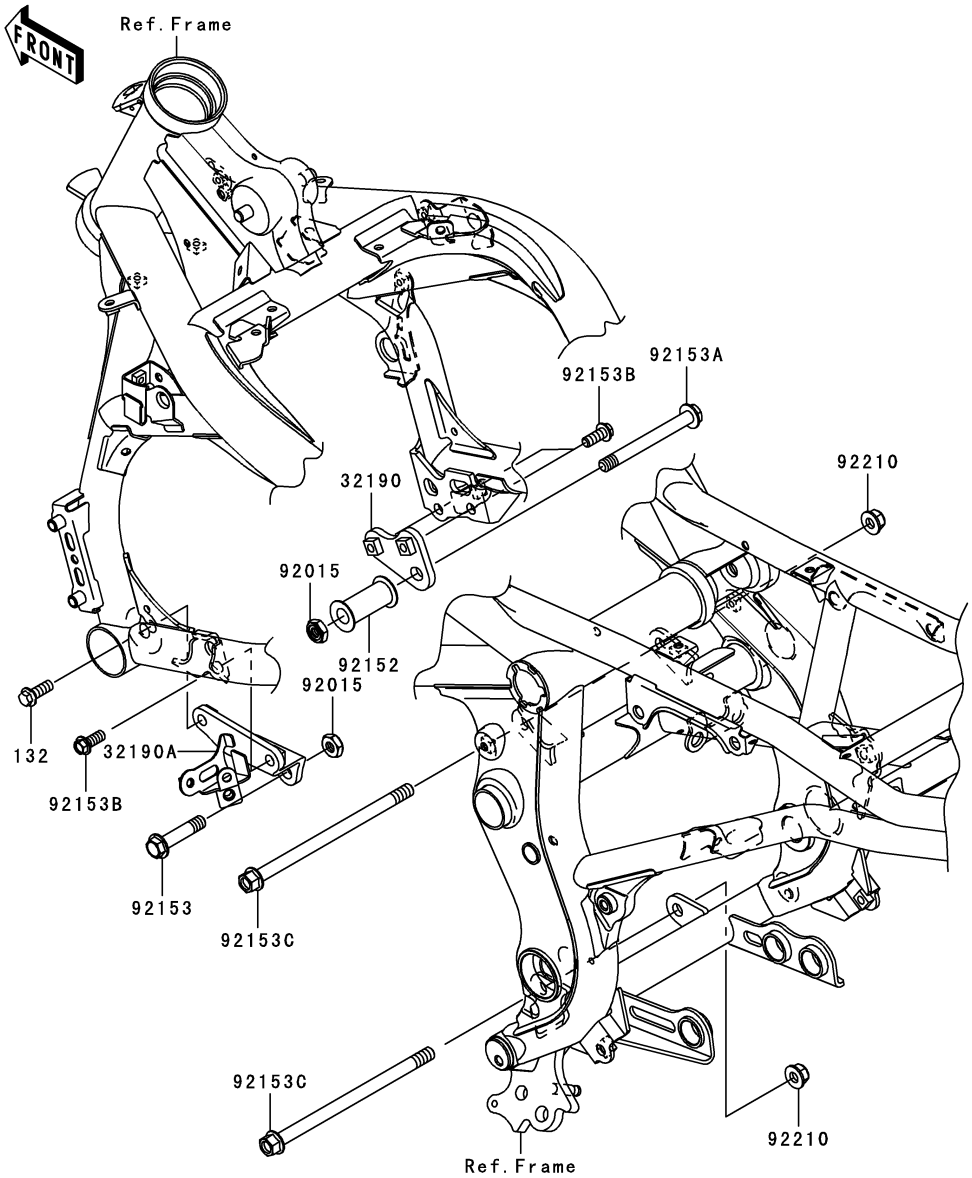

Ref. No.	Part No.	Description	Spec Code	Quantity-ER650 '06 A6S	'07 A7F	'08 A8F		
32190	32190-0189	BRACKET-ENGINE,RH		1	1	1		
32190A	32190-0234	BRACKET-ENGINE,LH		1	1	1		
92015	92015-1188	NUT,LOCK,10MM,BLACK		2	2	2		
92152	92152-0311	COLLAR,ENGINE MOUNT		1	1	1		
92153	92153-0823	BOLT,FLANGED,10X47		1	1	1		
92153A	92153-0976	BOLT,FLANGED,10X95		1	1	1		
92153B	92153-0995	BOLT,FLANGED,8X20		3	3	3		
92153C	92153-1428	BOLT,FLANGED,10X170		2	2	2		
92210	92210-1081	NUT,LOCK,FLANGED,10MM		2	2	2		
132	132BB0822	BOLT-FLANGED-SMALL,8X22		1	1	1		

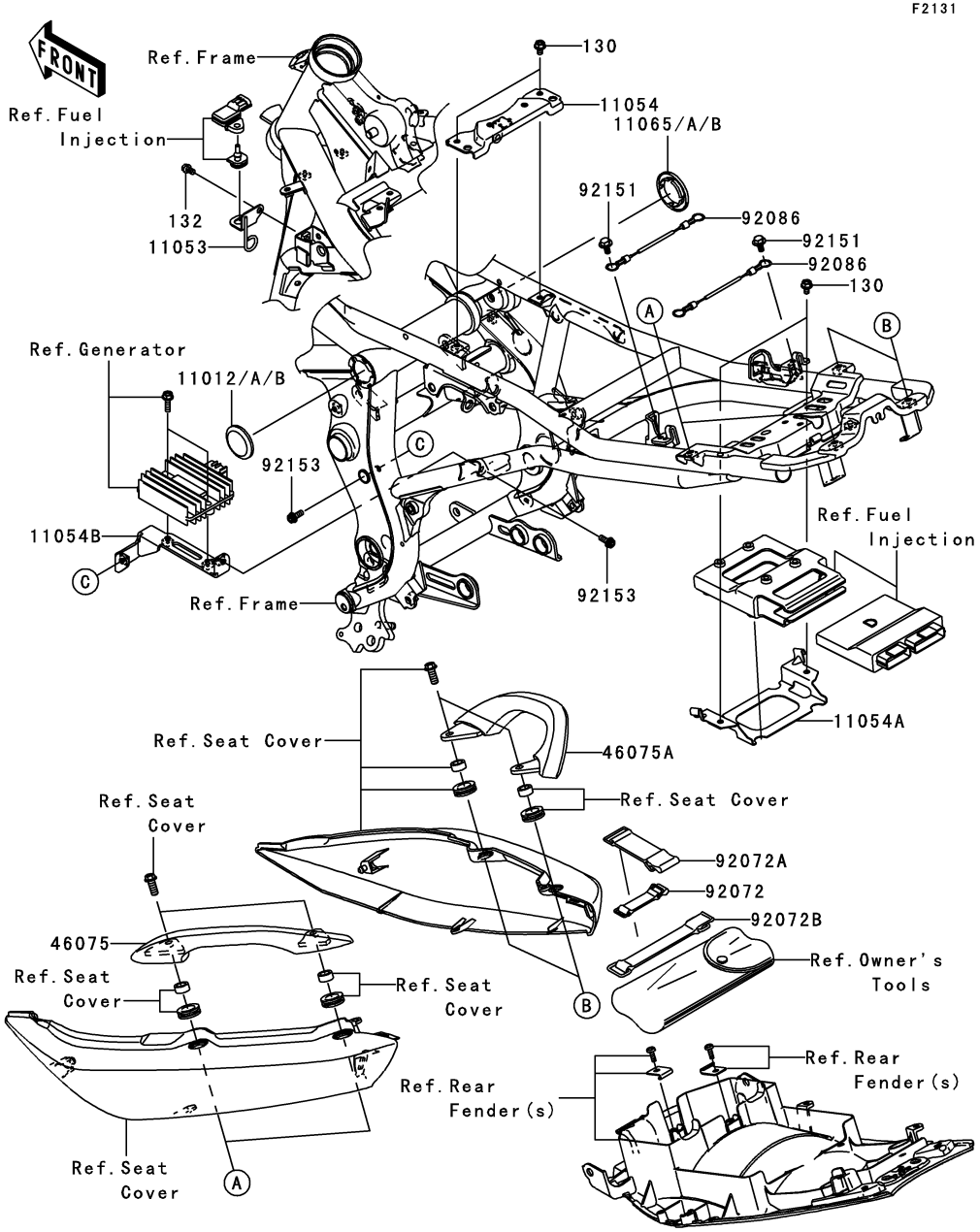

Ref. No.	Part No.	Description	Spec Code	Quantity-ER650 '06 A6S	'07 A7F	'08 A8F		
11012	11012-1717-10M	CAP,CROSS PIPE,M.BRONZE		1				
11012A	11012-1717-10N	CAP,CROSS PIPE,P.RED		1	1			
11012B	11012-1717-11J	CAP,CROSS PIPE,F.S.BLACK			1			
11053	11053-1931	BRACKET,BOOST SENSOR		1	1			
11054	11054-0248	BRACKET,FUEL TANK		1	1			
11054A	11054-0347	BRACKET,ECU		1	1			
11054B	11054-0523	BRACKET,REGULATOR		1	1			
11065	11065-0125-10M	CAP,FRAME,M.BRONZE		1				
11065A	11065-0125-10N	CAP,FRAME,P.RED		1	1			
11065B	11065-0125-11J	CAP,FRAME,F.S.BLACK			1			
46075	46075-0033	GRIP,LH		1	1			
46075A	46075-0034	GRIP,RH		1	1			
92072	92072-1085	BAND		1	1			
92072A	92072-1176	BAND,TOOL		1	1			
92072B	92072-1203	BAND,L=150		1	1			
92086	92086-1075	WIRE,L=150		2	2			
92151	92151-1703	BOLT,FLANGED,6X13		2	2			
92153	92153-1517	BOLT,SOCKET,6X16		2	2			
130	130L0610	BOLT-FLANGED,6X10		4	4			
132	132L0610	BOLT-FLANGED-SMALL,6X10		1	1			

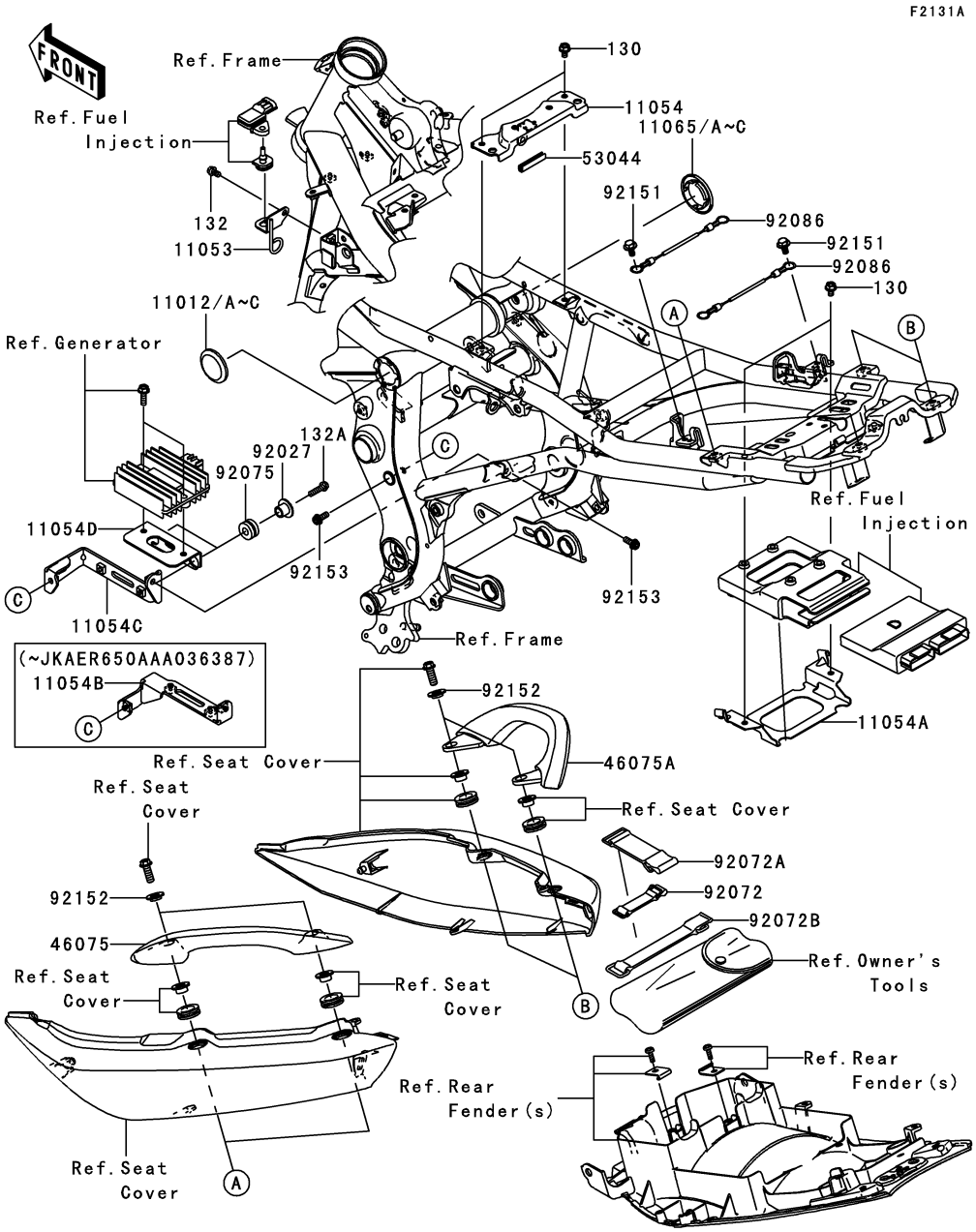

Ref. No.	Part No.	Description	Spec Code	Quantity-ER650 '06 A6S	'07 A7F	'08 A8F		
11012	11012-1717-10N	CAP,CROSS PIPE,P.RED			1			
11012A	11012-1717-11J	CAP,CROSS PIPE,F.S.BLACK			1			
11012B	11012-1717-18T	CAP,CROSS PIPE,BLACK				1		
11012C	11012-1717-458	CAP,CROSS PIPE,P.SILVER				1		
11053	11053-1931	BRACKET,BOOST SENSOR			1	1		
11054	11054-0248	BRACKET,FUEL TANK			1	1		
11054A	11054-0347	BRACKET,ECU			1	1		
11054B	11054-0523	BRACKET,REGULATOR			1			
	(	- JKAER650AAA036387)						
11054C	11054-1283	BRACKET,REGULATOR			1	1		
	(JKAER650AAA036388 -		)					
11054D	11054-1284	BRACKET,REGULATOR			1	1		
	(JKAER650AAA036388 -		)					
11065	11065-0125-10N	CAP,FRAME,P.RED			1			
11065A	11065-0125-11J	CAP,FRAME,F.S.BLACK			1			
11065B	11065-0125-18T	CAP,FRAME,BLACK				1		
11065C	11065-0125-458	CAP,FRAME,P.SILVER				1		
46075	46075-0057	GRIP,LH			1	1		
46075A	46075-0058	GRIP,RH			1	1		
53044	53044-1174	TRIM,L=40			1	1		
92027	92027-1450	COLLAR,L=13.1,BLACK			2	2		
	(JKAER650AAA036388 -		)					
92072	92072-1085	BAND			1	1		
92072A	92072-1176	BAND,TOOL			1	1		
92072B	92072-1203	BAND,L=150			1	1		
92075	92075-209	DAMPER			2	2		
	(JKAER650AAA036388 -		)					
92086	92086-1075	WIRE,L=150			2	2		
92151	92151-1703	BOLT,FLANGED,6X13			2	2		
92152	92152-0551	COLLAR			4	4		
92153	92153-1517	BOLT,SOCKET,6X16			2	2		
130	130BB0610	BOLT-FLANGED,6X10			4	4		
132	132BB0610	BOLT-FLANGED-SMALL,6X10			1	1		
132A	132BB0622	BOLT-FLANGED-SMALL,6X22			2	2		
	(JKAER650AAA036388 -		)					

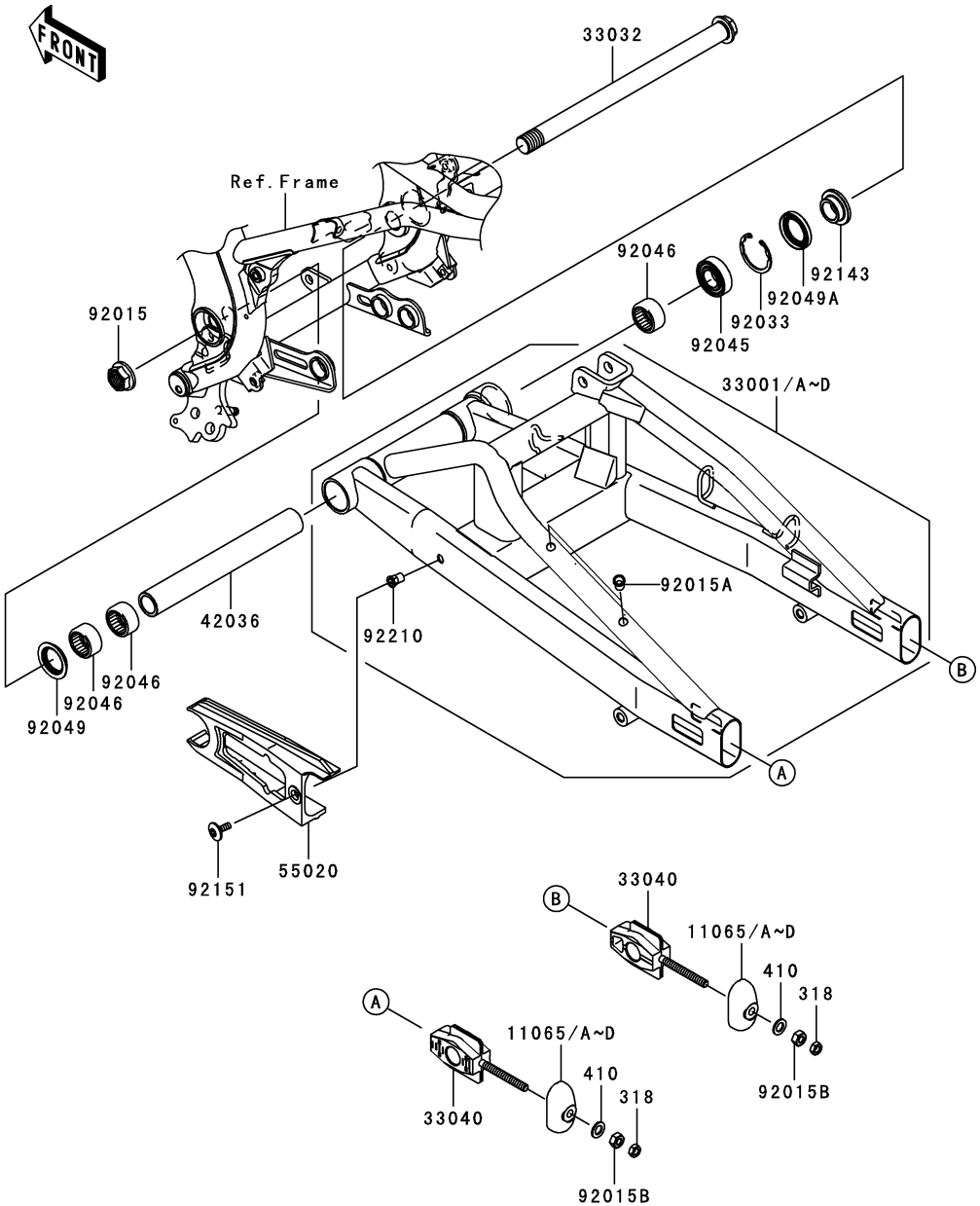

Ref. No.	Part No.	Description	Spec Code	Quantity-ER650 '06 A6S	'07 A7F	'08 A8F		
11065	11065-0121-11E	CAP,CHAIN ADJUSTER,F.S.BLACK			2			
11065A	11065-0121-18R	CAP,CHAIN ADJUSTER,BLACK				2		
11065B	11065-0121-458	CAP,CHAIN ADJUSTER,P.SILVER				2		
11065C	11065-0121-793	CAP,CHAIN ADJUSTER,M.BRONZE		2				
11065D	11065-0121-796	CAP,CHAIN ADJUSTER,P.RED		2	2			
33001	33001-0081-11E	ARM-COMP-SWING,F.S.BLACK			1			
33001A	33001-0081-18R	ARM-COMP-SWING,BLACK				1		
33001B	33001-0081-458	ARM-COMP-SWING,P.SILVER				1		
33001C	33001-0081-793	ARM-COMP-SWING,M.BRONZE		1				
33001D	33001-0081-796	ARM-COMP-SWING,P.RED		1	1			
33032	33032-1142	SHAFT-SWING ARM		1	1	1		
33040	33040-0015	ADJUSTER-CHAIN,INNER		2	2	2		
42036	42036-1358	SLEEVE,SWING ARM,L=219.5		1	1	1		
55020	55020-0192	GUARD,CHAIN		1	1	1		
92015	92015-1724	NUT,FLANGED,20MM		1	1	1		
92015A	92015-1759	NUT,POP,6MM		2	2	2		
92015B	92015-1959	NUT,8MM		2	2	2		
92033	92033-1041	RING-SNAP,42MM		1	1	1		
92045	92045-0017	BEARING-BALL,6004UL11		1	1	1		
92046	92046-0008	BEARING-NEEDLE,7E-HVS 28X34X17		3	3	3		
92049	92049-1181	SEAL-OIL		1	1	1		
92049A	92049-1185	SEAL-OIL,TC28426.5		1	1	1		
92143	92143-1727	COLLAR,SWING ARM,RH,L=12.5		1	1	1		
92151	92151-1149	BOLT,SOCKET,6X18		1	1	1		
92210	92210-1397	NUT,POP,6MM,L=15		1	1	1		
318	318C0800	NUT-HEX-SMALL		2	2	2		
410	410F0800	WASHER-PLAIN-SMALL,8MM,BLACK		2	2	2		

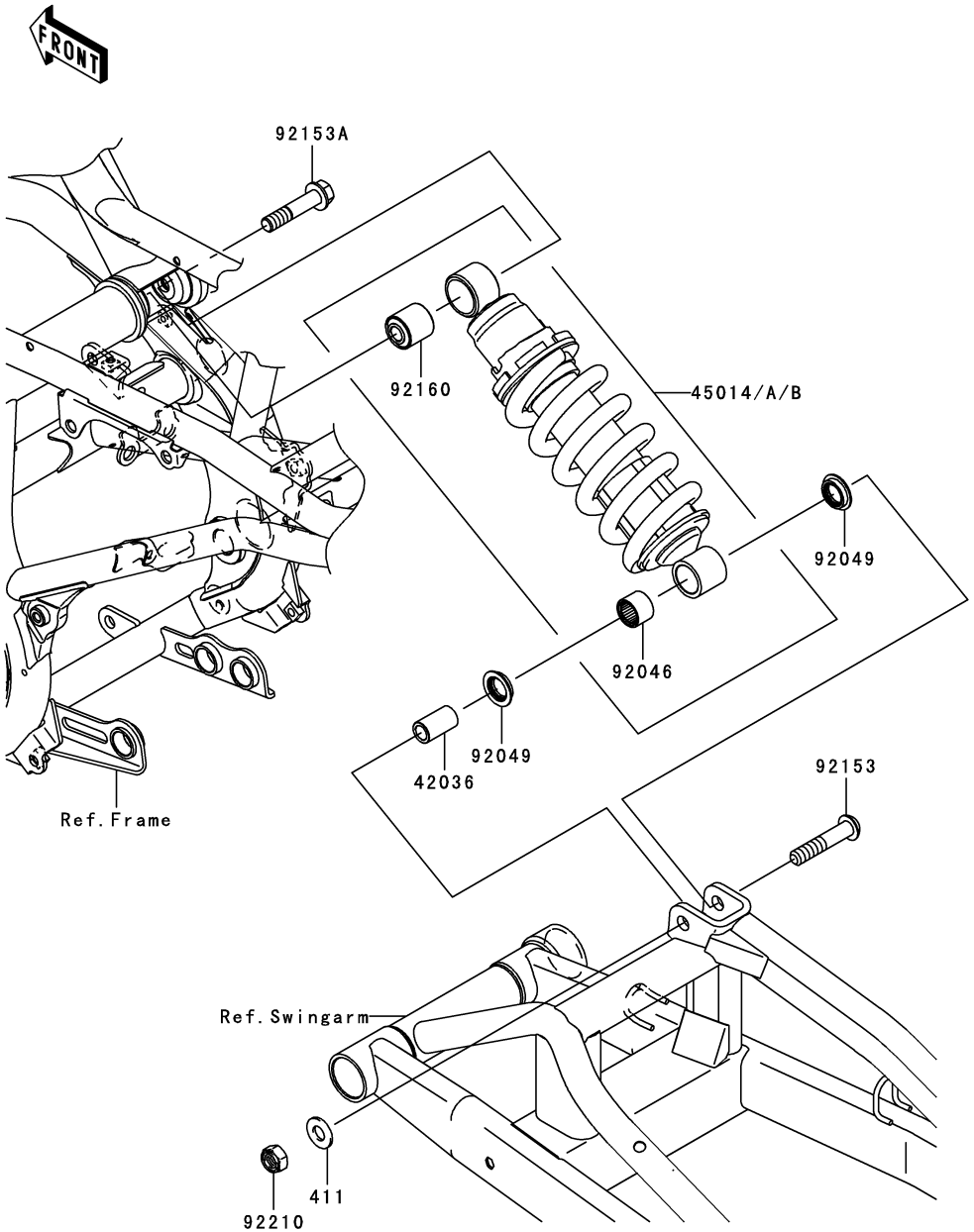

F2151

Ref. No.	Part No.	Description	Spec Code	Quantity-ER650 '06 A6S	'07 A7F	'08 A8F		
42036	42036-0024	SLEEVE,12.1X18X32		1	1	1		
45014	45014-0140-458	SHOCKABSORBER,P.SILVER			1	1		
45014A	45014-0140-794	SHOCKABSORBER,M.GOLD		1				
45014B	45014-0140-796	SHOCKABSORBER,P.RED		1	1			
92046	92046-1272	BEARING-NEEDLE,SFYZM182417		1	1	1		
92049	92049-1493	SEAL-OIL,KCR MF018N1		2	2	2		
92153	92153-1484	BOLT,SOCKET,12X60		1	1	1		
92153A	92153-1766	BOLT,FLANGED,12X55		1	1	1		
92160	92160-1161	DAMPER,SHOCKABSORBER		1	1	1		
92210	92210-0300	NUT,LOCK,12MM		1	1	1		
411	411AA1200	WASHER-PLAIN,12MM		1	1	1		

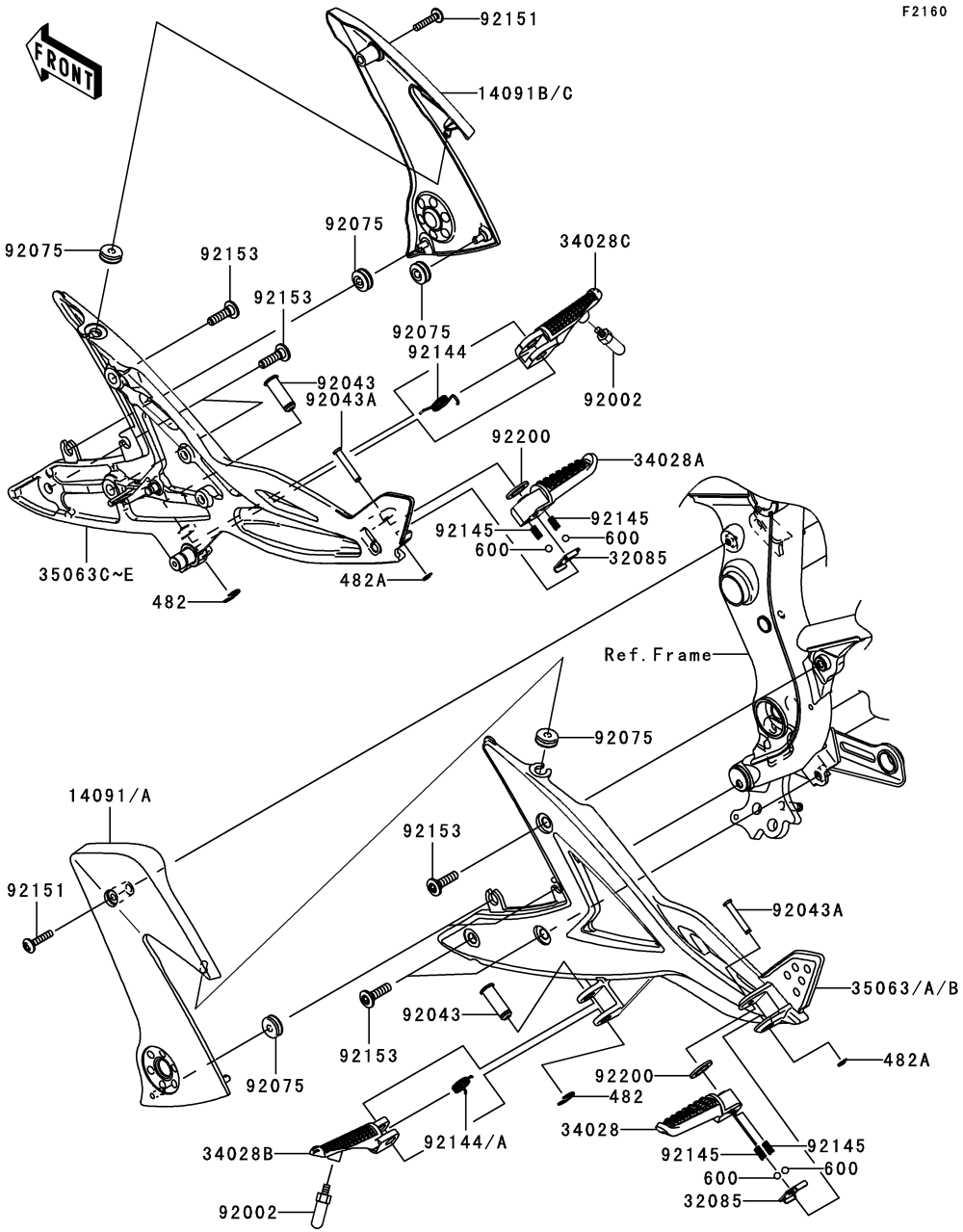

Ref. No.	Part No.	Description	Spec Code	Quantity-ER650 '06 A6S	'07 A7F	'08 A8F		
14091	14091-0461-6Z	COVER,PIVOT,LH,F.BLACK				1		
14091A	14091-0461-837	COVER,PIVOT,LH,S.F.C.GRAY		1	1			
14091B	14091-0789-6Z	COVER,PIVOT,RH,F.BLACK				1		
14091C	14091-0789-837	COVER,PIVOT,RH,S.F.C.GRAY		1	1			
32085	32085-0047	STOPPER,REAR STEP		2	2	2		
34028	34028-0004	STEP,RR,LH		1	1	1		
34028A	34028-0005	STEP,RR,RH		1	1	1		
34028B	34028-0059	STEP,FR,LH		1	1	1		
34028C	34028-0060	STEP,FR,RH		1	1	1		
35063	35063-0285-18R	STAY,STEP,LH,BLACK				1		
35063A	35063-0285-458	STAY,STEP,LH,P.SILVER				1		
35063B	35063-0285-735	STAY,STEP,LH,M.SILVER		1	1			
35063C	35063-0286-18R	STAY,STEP,RH,BLACK				1		
35063D	35063-0286-458	STAY,STEP,RH,P.SILVER				1		
35063E	35063-0286-735	STAY,STEP,RH,M.SILVER		1	1			
92002	92002-1995	BOLT,BANK SENSOR		2	2	2		
92043	92043-0028	PIN,12X36.5		2	2	2		
92043A	92043-1595	PIN,6X40		2	2	2		
92075	92075-1067	DAMPER		6	6	6		
92144	92144-1567	SPRING,STEP RETURN		1	2	2		
92144A	92144-1568	SPRING,STEP RETURN		1				
92145	92145-1319	SPRING		4	4	4		
92151	92151-1605	BOLT,SOCKET,6X30		2	2	2		
92153	92153-1630	BOLT,SOCKET,8X30		6	6	6		
92200	92200-0043	WASHER,16X26X2.3		2	2	2		
482	482L0100	CIRCLIP-TYPE-E,10MM		2	2	2		
482A	482L5000	CIRCLIP-TYPE-E,5MM		2	2	2		
600	600A0800	BALL-STEEL,1/4"		4	4	4		

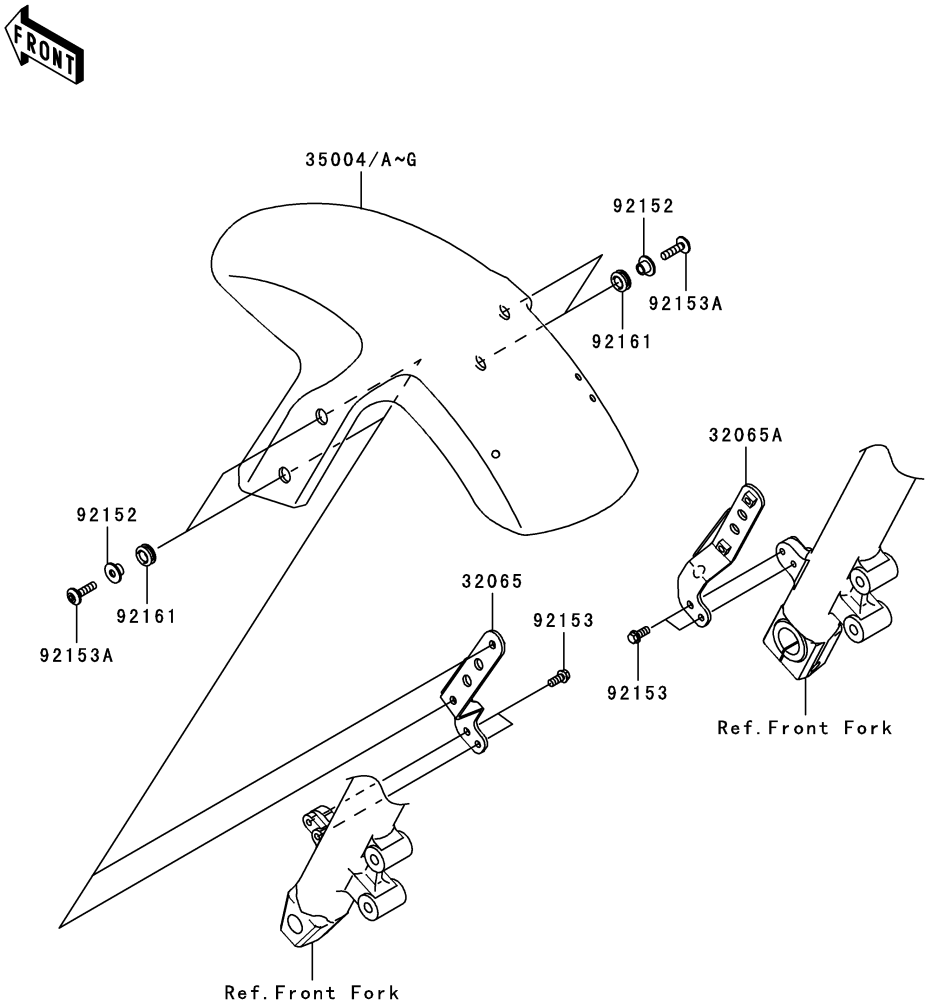

F2171

Ref. No.	Part No.	Description	Spec Code	Quantity-ER650 '06 A6S	'07 A7F	'08 A8F		
32065	32065-0022	BRACKET-FENDER,LH		1	1	1		
32065A	32065-0023	BRACKET-FENDER,RH		1	1	1		
35004	35004-0053-H8	FENDER-FRONT,EBONY		1				
35004A	35004-0053-15D	FENDER-FRONT,C.P.BLUE				1		
35004B	35004-0053-15P	FENDER-FRONT,C.L.GREEN				1		
35004C	35004-0053-15Q	FENDER-FRONT,M.D.BLACK				1		
35004D	35004-0053-17H	FENDER-FRONT,P.ORANGE			1			
35004E	35004-0053-17K	FENDER-FRONT,M.BLACK			1			
35004F	35004-0053-474	FENDER-FRONT,G.SILVER		1	1			
35004G	35004-0053-789	FENDER-FRONT,V.YELLOW		1				
92152	92152-0295	COLLAR		4	4	4		
92153	92153-0589	BOLT,FLANGED,6X14		4	4	4		
92153A	92153-1267	BOLT,SOCKET,6X23		4	4	4		
92161	92161-0266	DAMPER		4	4	4		

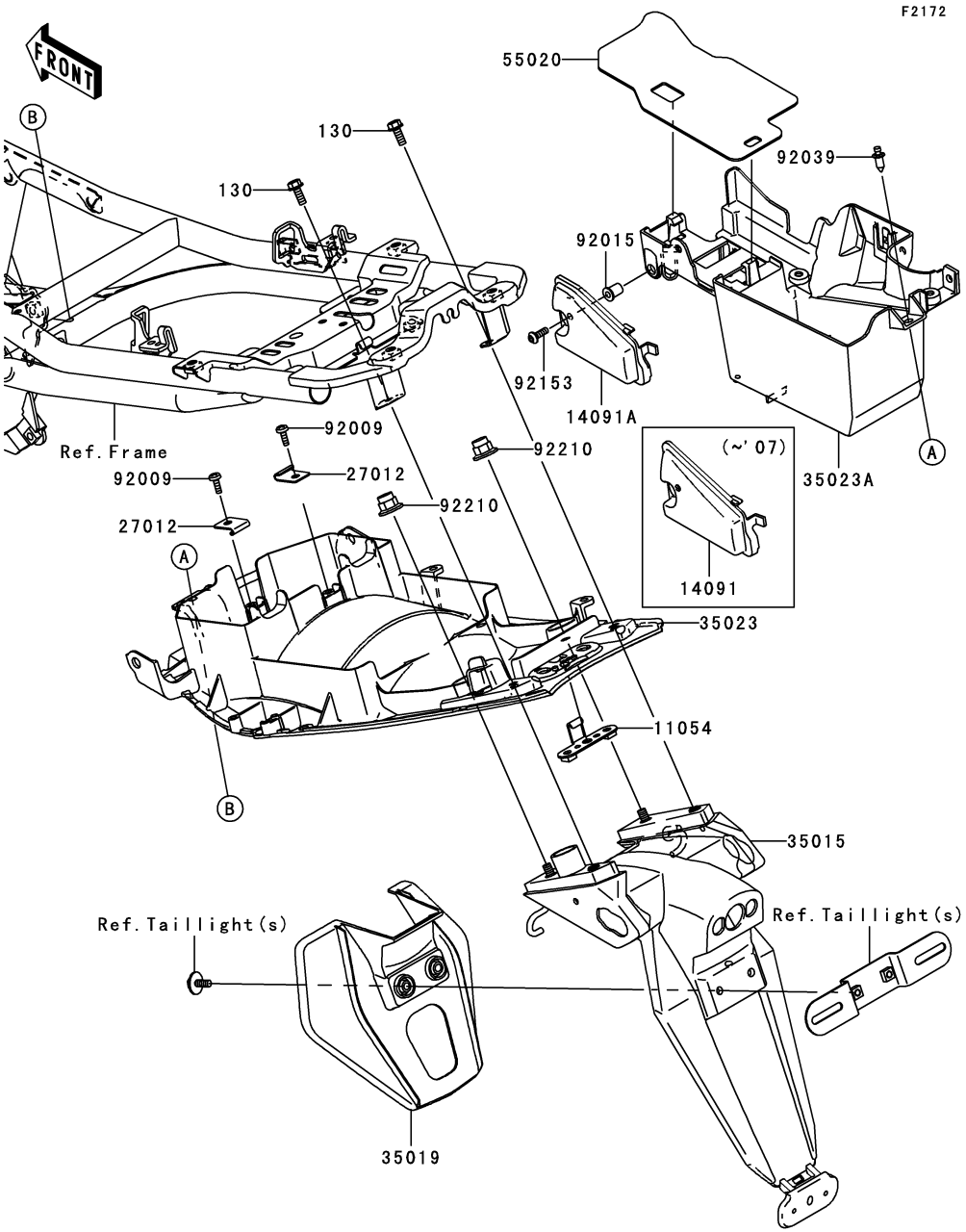

Ref. No.	Part No.	Description	Spec Code	Quantity-ER650 '06 A6S	'07 A7F	'08 A8F		
11054	11054-0253	BRACKET,TAIL LAMP		1	1	1		
14091	14091-0488	COVER,SWITCH MAINTENANCE		1	1			
14091A	14091-0715	COVER,SWITCH MAINTENANCE				1		
27012	27012-1316	HOOK,BATTERY CASE		2	2	2		
35015	35015-0005	FLAP-COMP		1	1	1		
35019	35019-0042	FLAP		1	1	1		
35023	35023-0076	FENDER-REAR,RR		1	1	1		
35023A	35023-0077	FENDER-REAR,FR		1	1	1		
55020	55020-0220	GUARD,HEAT		1	1	1		
92009	92009-3845	SCREW,6X14		2	2	2		
92015	92015-1757	NUT,WELL,5MM		1	1	1		
92039	92039-1283	RIVET		1	1	1		
92153	92153-1244	BOLT,SOCKET,5X16		1	1	1		
92210	92210-0170	NUT,CAP,6MM		2	2	2		
130	130BB0618	BOLT-FLANGED,6X18		2	2	2		

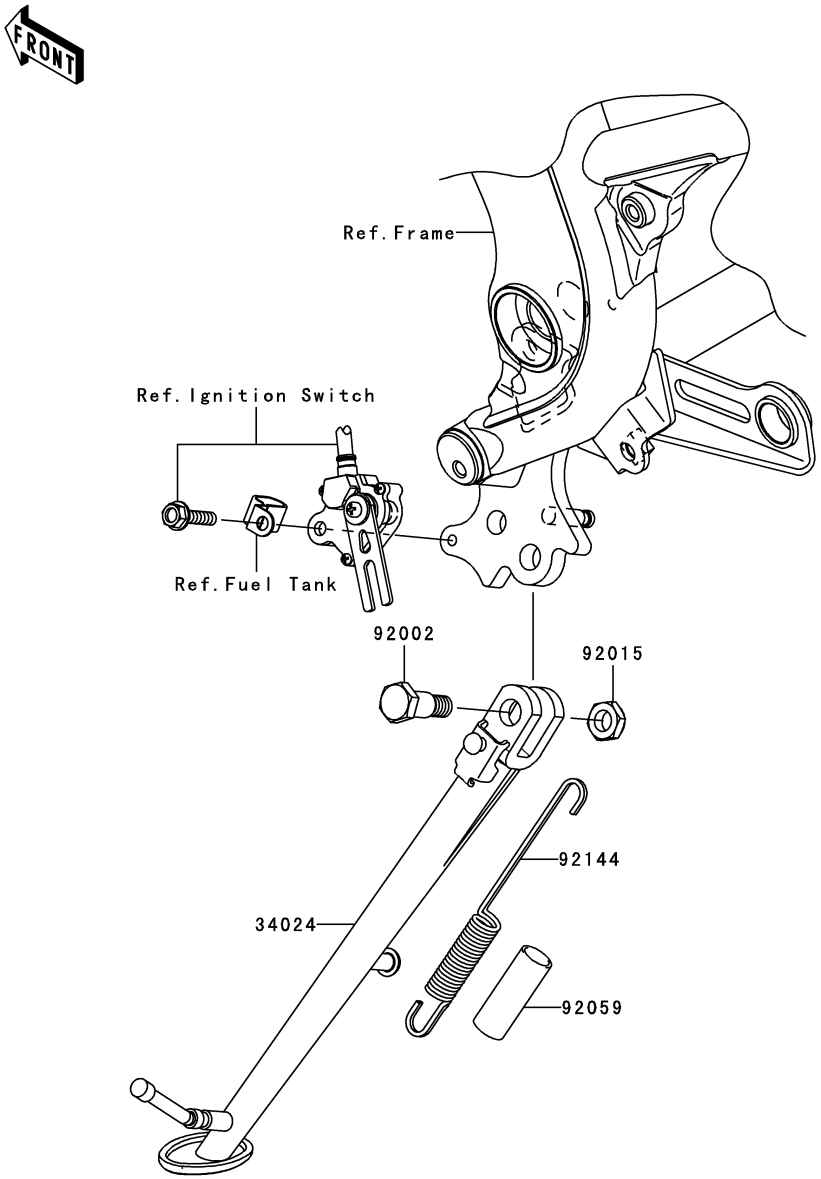

F2190

Ref. No.	Part No.	Description	Spec Code	Quantity-ER650 '06 A6S	'07 A7F	'08 A8F		
34024	34024-0024	STAND-SIDE		1	1	1		
92002	92002-1935	BOLT,SIDE STAND		1	1	1		
92015	92015-1188	NUT,LOCK,10MM,BLACK		1	1	1		
92059	92059-1961	TUBE,14X17X50		1	1	1		
92144	92144-1818	SPRING,SIDE STAND		1	1	1		

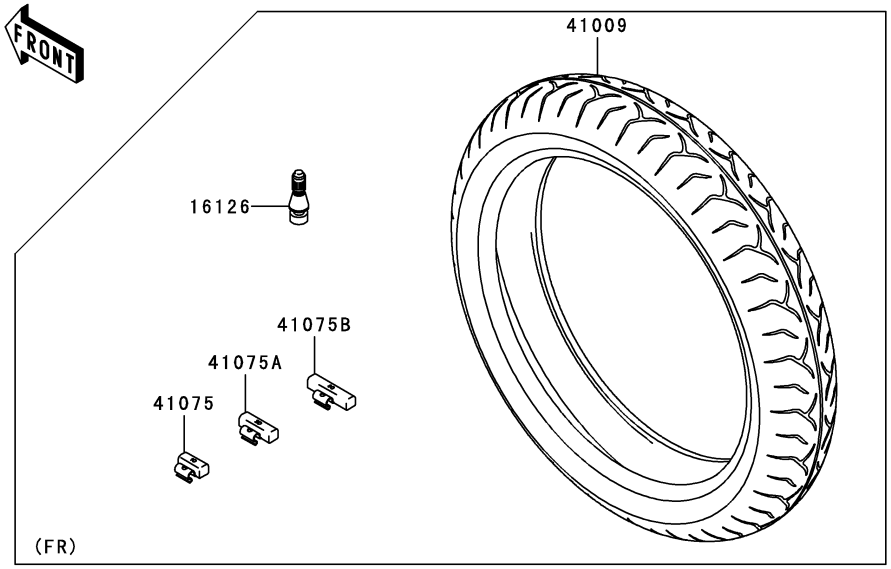

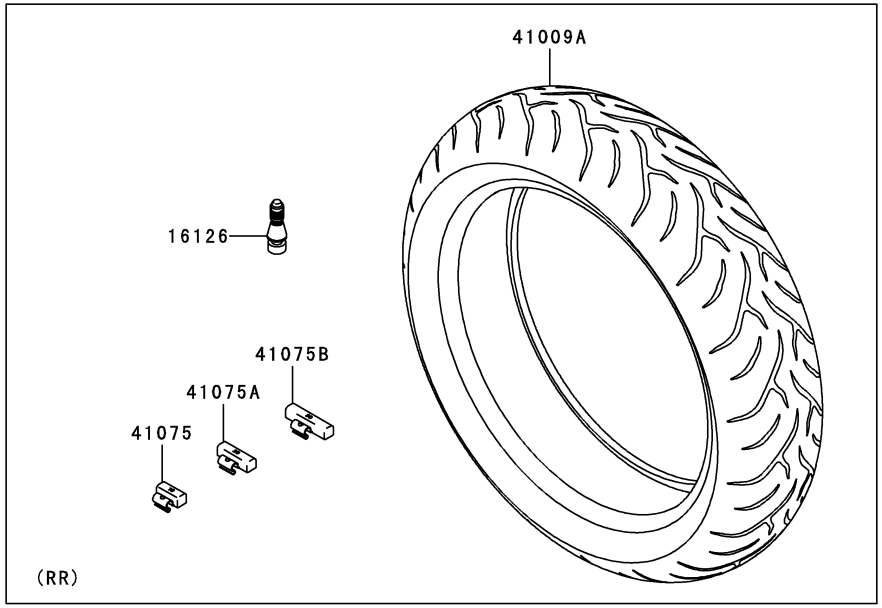

F2210

Ref. No.	Part No.	Description	Spec Code	Quantity-ER650				
				’06	’07	’08		
				A6S	A7F	A8F		
16126	16126-1140	VALVE,TIRE		2	2	2		
41009	41009-0109	TIRE,FR,120/70ZR17(58W),D221FA		1	1	1		
41009A	41009-0110	TIRE,RR,160/60ZR17(69W),D221J		1	1	1		
41075	41075-0007	BALANCER-WHEEL,10G,SILVER		AR	AR	AR		
41075A	41075-0008	BALANCER-WHEEL,20G,SILVER		AR	AR	AR		
41075B	41075-0009	BALANCER-WHEEL,30G,SILVER		AR	AR	AR		

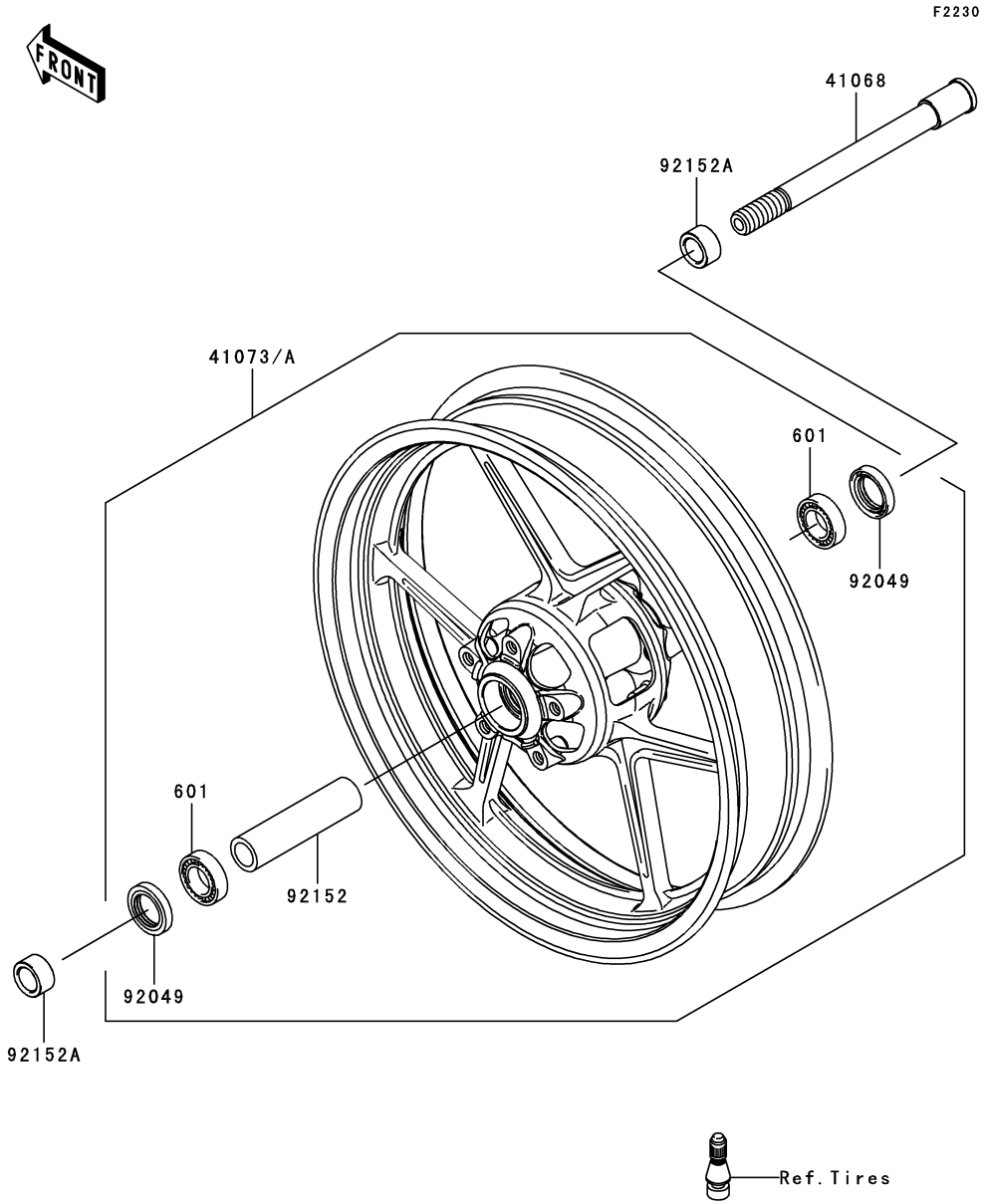

Ref. No.	Part No.	Description	Spec Code	Quantity-ER650 '06 A6S	'07 A7F	'08 A8F		
41068	41068-0059	AXLE,FR		1	1	1		
41073	41073-0053-R2	WHEEL-ASSY,FR,BLACK			1	1		
41073A	41073-0053-795	WHEEL-ASSY,FR,M.F.P.SILVER		1	1	1		
92049	92049-1057	SEAL-OIL,BJN30427-C3		2	2	2		
92152	92152-0087	COLLAR,FR HUB,L=115		1	1	1		
92152A	92152-0310	COLLAR,FR AXLE,L=15.5		2	2	2		
601	601B6004UU	BEARING-BALL,#6004UUC3		2	2	2		

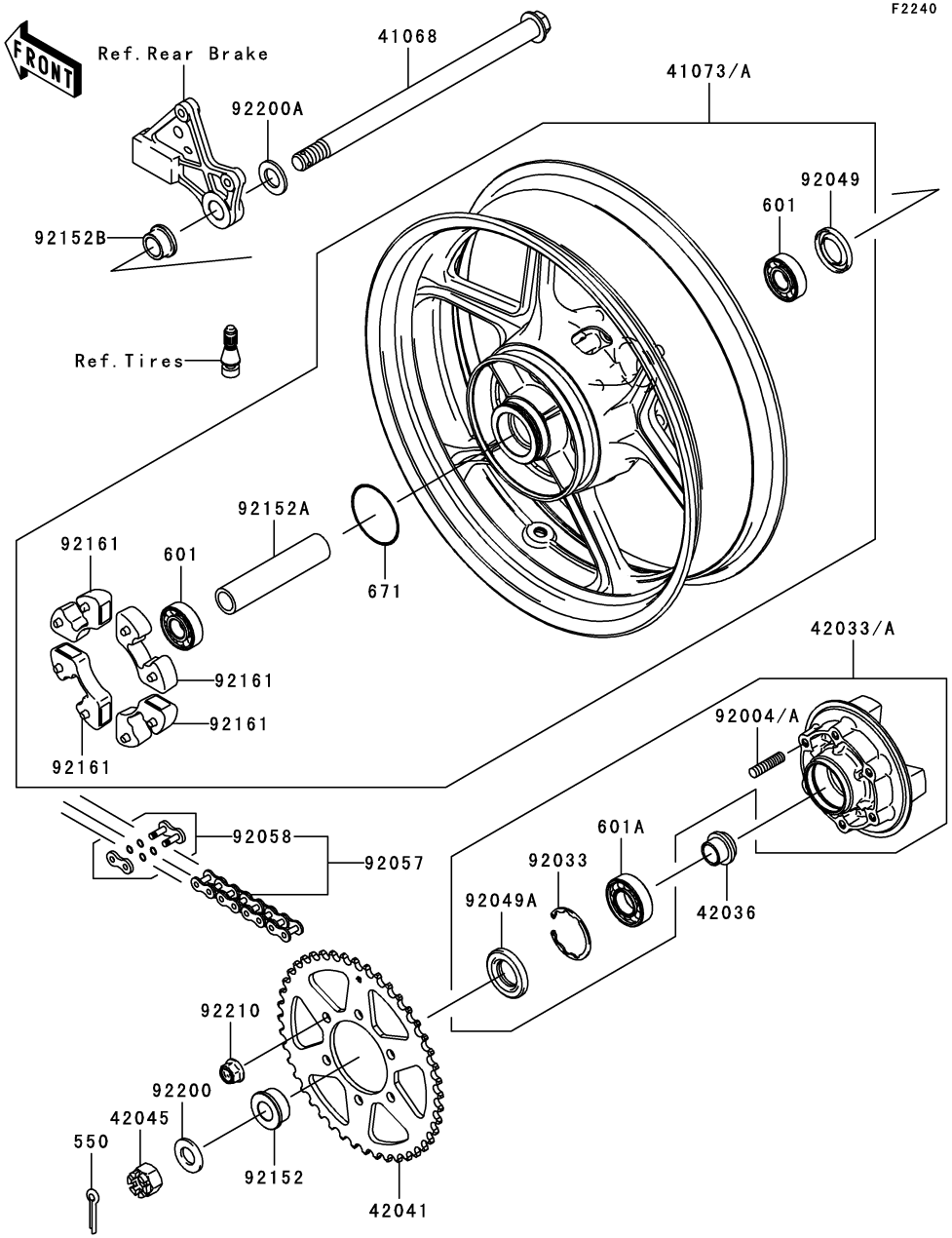

Ref. No.	Part No.	Description	Spec Code	Quantity-ER650 '06 A6S	'07 A7F	'08 A8F		
41068	41068-0053	AXLE,RR		1	1	1		
41073	41073-0051-R2	WHEEL-ASSY,RR,BLACK			1	1		
41073A	41073-0051-795	WHEEL-ASSY,RR,M.F.P.SILVER		1	1	1		
42033	42033-0003	COUPLING-ASSY,RR HUB		1	1			
42033A	42033-0028	COUPLING-ASSY,RR HUB				1		
42036	42036-1251	SLEEVE,RR HUB,L=23		1	1	1		
42041	42041-0020	SPROCKET-HUB,46T		1	1	1		
42045	42045-018	NUT,CASTLE,18MM		1	1	1		
92004	92004-0028	STUD,10X19				6		
92004A	92004-1275	STUD,10X19		6	6			
92033	92033-1043	RING-SNAP,52MM		1	1	1		
92049	92049-1056	SEAL-OIL,BJN28475		1	1	1		
92049A	92049-1287	SEAL-OIL		1	1	1		
92057	92057-0101	CHAIN,DRIVE,EK520MVXL1X114L		1	1	1		
92058	92058-0007	JOINT-CHAIN,DRIVE		1	1	1		
92152	92152-0118	COLLAR,RR AXLE,LH,L=18		1	1	1		
92152A	92152-0301	COLLAR,RR HUB,L=133		1	1	1		
92152B	92152-0302	COLLAR,RR AXLE,RH,L=17		1	1	1		
92161	92161-0303	DAMPER,SHOCK,RR HUB		4	4	4		
92200	92200-0296	WASHER,19X36X3.2		1	1	1		
92200A	92200-0297	WASHER,20.5X36X3.2		1	1	1		
92210	92210-0276	NUT,LOCK,FLANGED,10MM		6	6	6		
550	550D4035	PIN-COTTER,4.0X35		1	1	1		
601	601B6204UU	BEARING-BALL,6204UUC3		2	2	2		
601A	601B6205UU	BEARING-BALL		1	1	1		
671	671B2560	O RING,60MM		1	1	1		

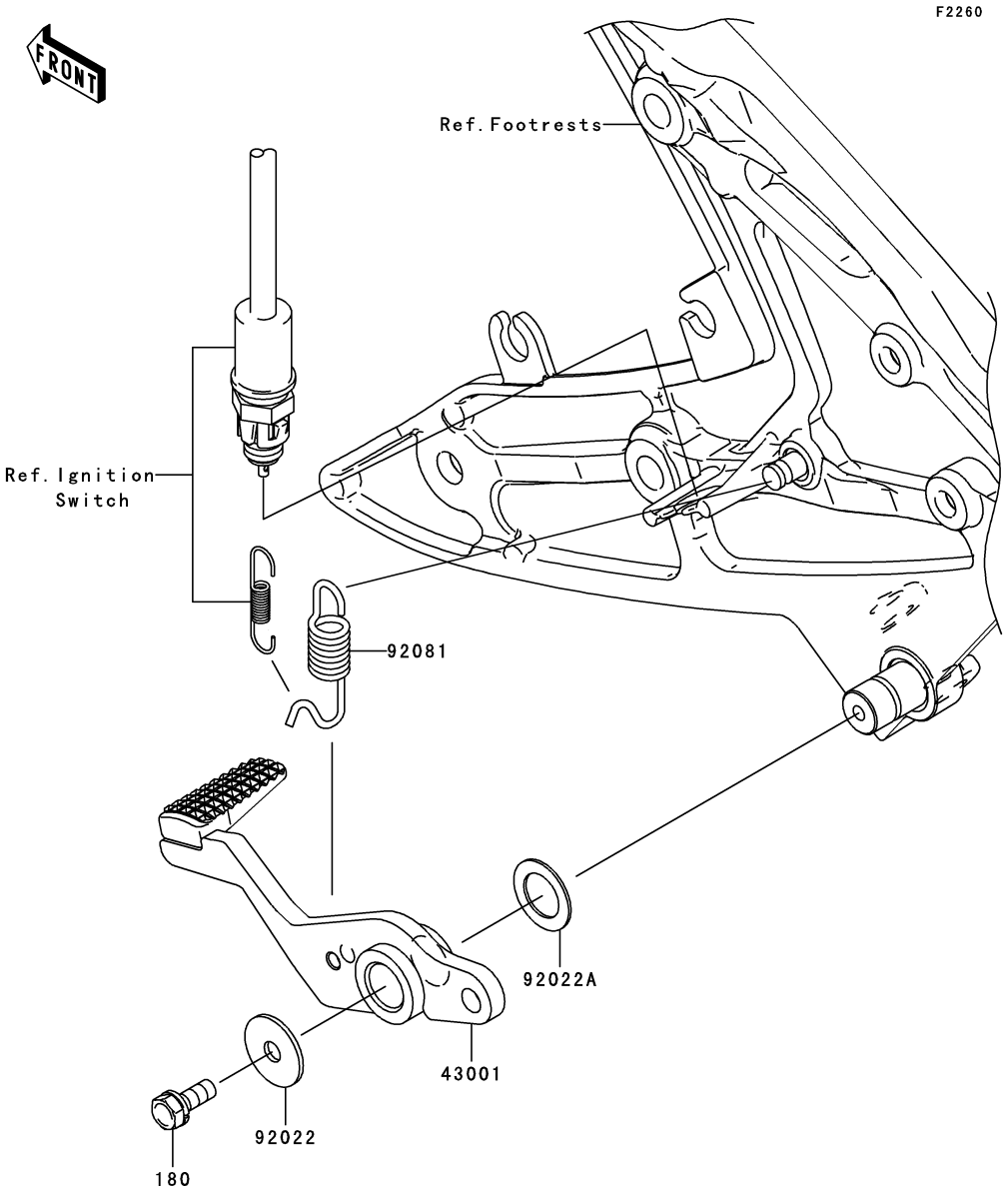

Ref. No.	Part No.	Description	Spec Code	Quantity-ER650				
				’06	’07	’08		
				A6S	A7F	A8F		
43001	43001-0051	LEVER-BRAKE,PEDAL		1	1	1		
92022	92022-228	WASHER,7X24X1.6		1	1	1		
92022A	92022-326	WASHER,15.3X24X1		1	1	1		
92081	92081-1833	SPRING,BRAKE PEDAL		1	1	1		
180	180AA0616	BOLT-UPSET-WS,6X16		1	1	1		

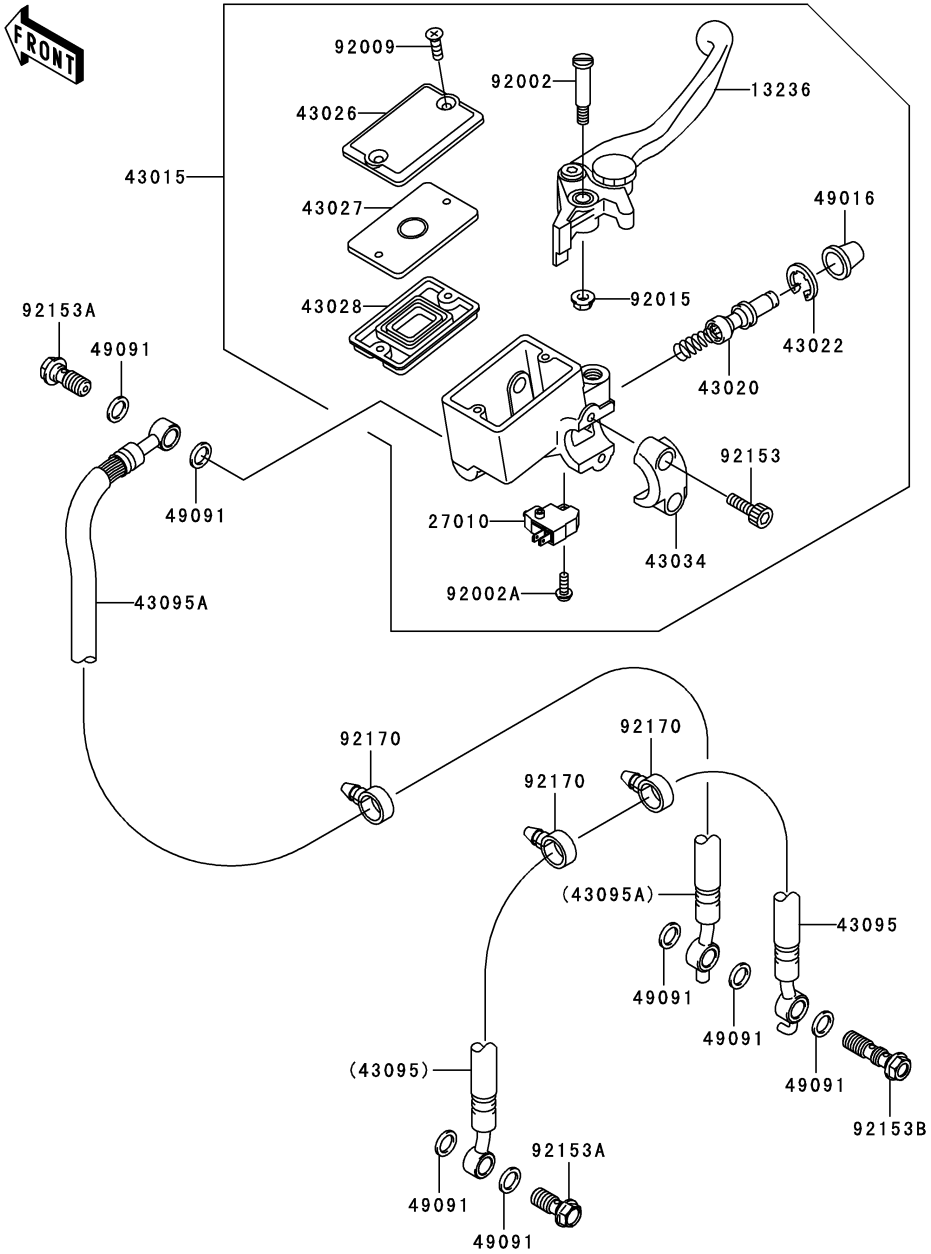

Ref. No.	Part No.	Description	Spec Code	Quantity-ER650 '06 A6S	'07 A7F	'08 A8F		
13236	13236-1337	LEVER-COMP,FRONT BRAKE		1	1	1		
27010	27010-0025	SWITCH,BRAKE		1	1	1		
43015	43015-0011	CYLINDER-ASSY-MASTER,FR		1	1	1		
43020	43020-1054	PISTON-COMP-BRAKE,FR		1	1	1		
43022	43022-1010	STOPPER-BRAKE,PISTON		1	1	1		
43026	43026-1076	CAP-BRAKE		1	1	1		
43027	43027-1055	PLATE-DIAPHRAGM		1	1	1		
43028	43028-1058	DIAPHRAGM,MASTER CYLINDER		1	1	1		
43034	43034-1053	HOLDER-BRAKE,MASTER CYLINDER		1	1	1		
43095	43095-0211	HOSE-BRAKE,FR		1	1	1		
43095A	43095-0236	HOSE-BRAKE,FR		1	1	1		
49016	49016-1044	COVER-SEAL,MASTER CYLINDER		1	1	1		
49091	49091-0001	WASHER-SEAL,10.1X14.5X1.5		7	7	7		
92002	92002-1322	BOLT,LEVER SET,BLACK		1	1	1		
92002A	92002-1323	BOLT,SCREW,4X12		1	1	1		
92009	92009-1458	SCREW,4MM		2	2	2		
92015	92015-1233	NUT,FLANGED,6MM,BLACK		1	1	1		
92153	92153-0417	BOLT,SOCKET,6X20		2	2	2		
92153A	92153-0627	BOLT,OIL,L=23		2	2	2		
92153B	92153-0628	BOLT,OIL,L=37		1	1	1		
92170	92170-1067	CLAMP		3	3	3		

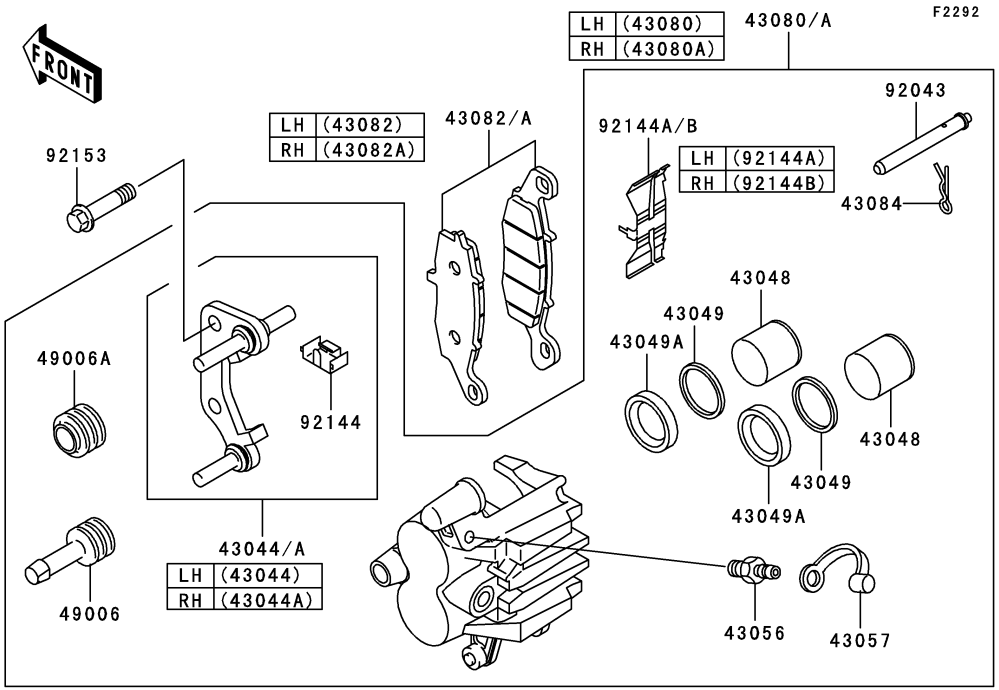

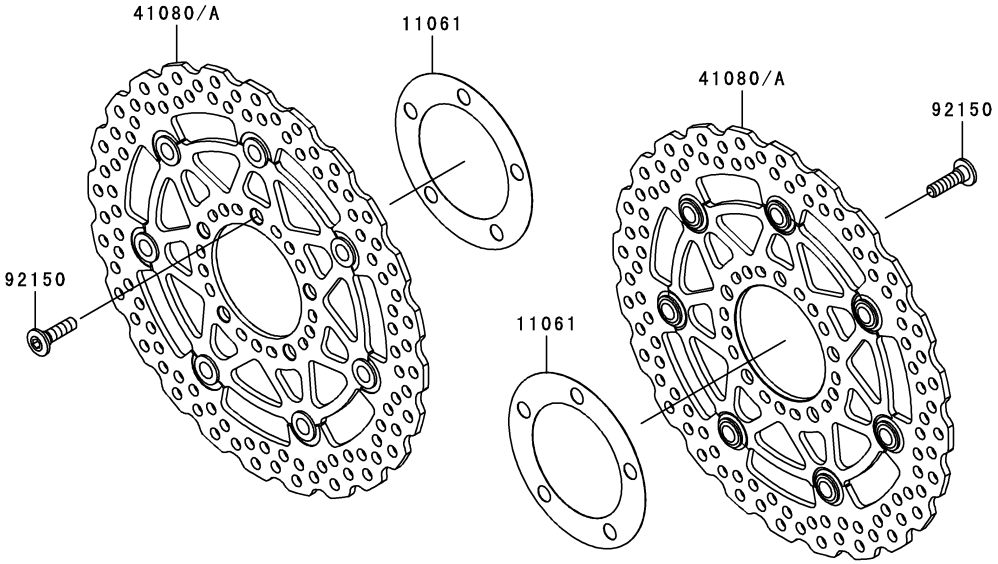

Ref. No.	Part No.	Description	Spec Code	Quantity-ER650 '06 A6S	'07 A7F	'08 A8F		
11061	11061-0029	GASKET,DISC PLATE		2	2	2		
41080	41080-0103-10R	DISC,FR,GOLD+DISC-SILVER		2				
41080A	41080-0103-11I	DISC,FR,BLACK+DISC SILVER			2	2		
43044	43044-1115	HOLDER-COMP-CALIPER,FR,LH		1	1	1		
43044A	43044-1116	HOLDER-COMP-CALIPER,FR,RH		1	1	1		
43048	43048-1073	PISTON-CALIPER		4	4	4		
43049	43049-1068	PACKING		4	4	4		
43049A	43049-1092	PACKING,PISTON SEAL		4	4	4		
43056	43056-1054	BREATHER-BRAKE		2	2	2		
43057	43057-003	CAP-BREATHER		2	2	2		
43080	43080-5017-DJ	CALIPER-SUB-ASSY,FR,LH,BLACK		1	1	1		
43080A	43080-5028-DJ	CALIPER-SUB-ASSY,FR,RH,BLACK		1	1	1		
43082	43082-0050	PAD-ASSY-BRAKE,LH		1	1	1		
43082A	43082-0051	PAD-ASSY-BRAKE,RH		1	1	1		
43084	43084-003	CLAMP,PAD		2	2	2		
49006	49006-1054	BOOT,CALIPER		2	2	2		
49006A	49006-1095	BOOT,CALIPER		2	2	2		
92043	92043-1489	PIN,PAD		2	2	2		
92144	92144-1831	SPRING,STOPPER		2	2	2		
92144A	92144-1832	SPRING,PAD,LH		1	1	1		
92144B	92144-1844	SPRING,PAD,RH		1	1	1		
92150	92150-1771	BOLT,SOCKET,8X30		10	10	10		
92153	92153-0587	BOLT,FLANGED,10X41		4	4	4		

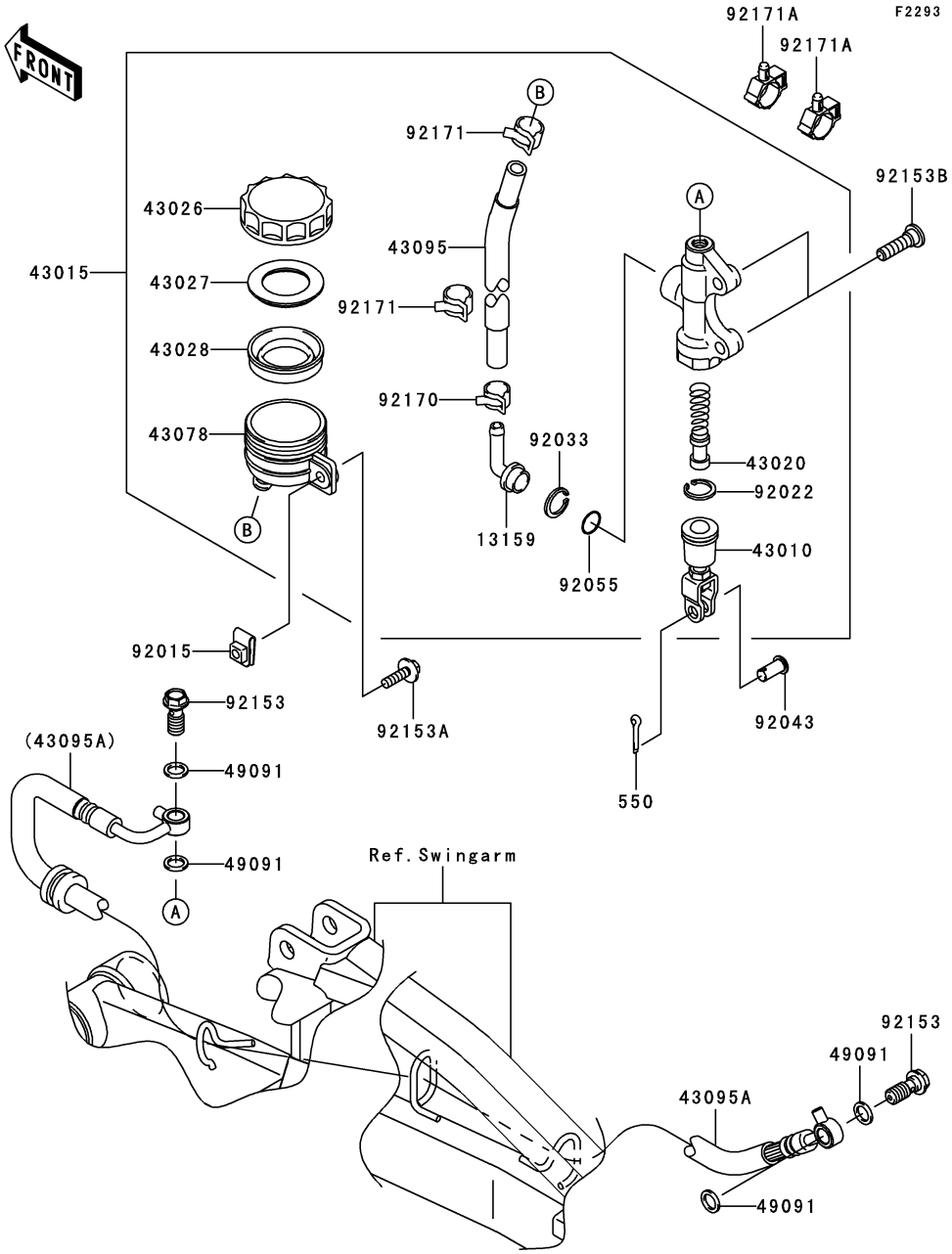

Ref. No.	Part No.	Description	Spec Code	Quantity-ER650 '06 A6S	'07 A7F	'08 A8F		
13159	13159-1056	CONNECTOR		1	1	1		
43010	43010-1074	ROD-ASSY-BRAKE		1	1	1		
43015	43015-0068	CYLINDER-ASSY-MASTER,RR		1	1	1		
43020	43020-1094	PISTON-COMP-BRAKE		1	1	1		
43026	43026-1051	CAP-BRAKE		1	1	1		
43027	43027-1051	PLATE-DIAPHRAGM		1	1	1		
43028	43028-1057	DIAPHRAGM,MASTER CYLINDER		1	1	1		
43078	43078-1082	RESERVOIR,RR MASTER CYLINDER		1	1	1		
43095	43095-0193	HOSE-BRAKE,RR MASTER CYLINDER		1	1	1		
43095A	43095-0238	HOSE-BRAKE,RR		1	1	1		
49091	49091-0001	WASHER-SEAL,10.1X14.5X1.5		4	4	4		
92015	92015-1602	NUT,6MM		1	1	1		
92022	92022-1601	WASHER,CIRCRIP		1	1	1		
92033	92033-1186	RING-SNAP,20.5MM		1	1	1		
92043	92043-0104	PIN,8X17		1	1	1		
92055	92055-1251	RING-O,MASTER CYLINDER		1	1	1		
92153	92153-0627	BOLT,OIL,L=23		2	2	2		
92153A	92153-0725	BOLT,6X22		1	1	1		
92153B	92153-1624	BOLT,SOCKET,8X30		2	2	2		
92170	92170-1091	CLAMP,HOSE		1	1	1		
92171	92171-0463	CLAMP,HOSE		2	2	2		
92171A	92171-0955	CLAMP		2	2	2		
550	550D2015	PIN-COTTER,2.0X15		1	1	1		

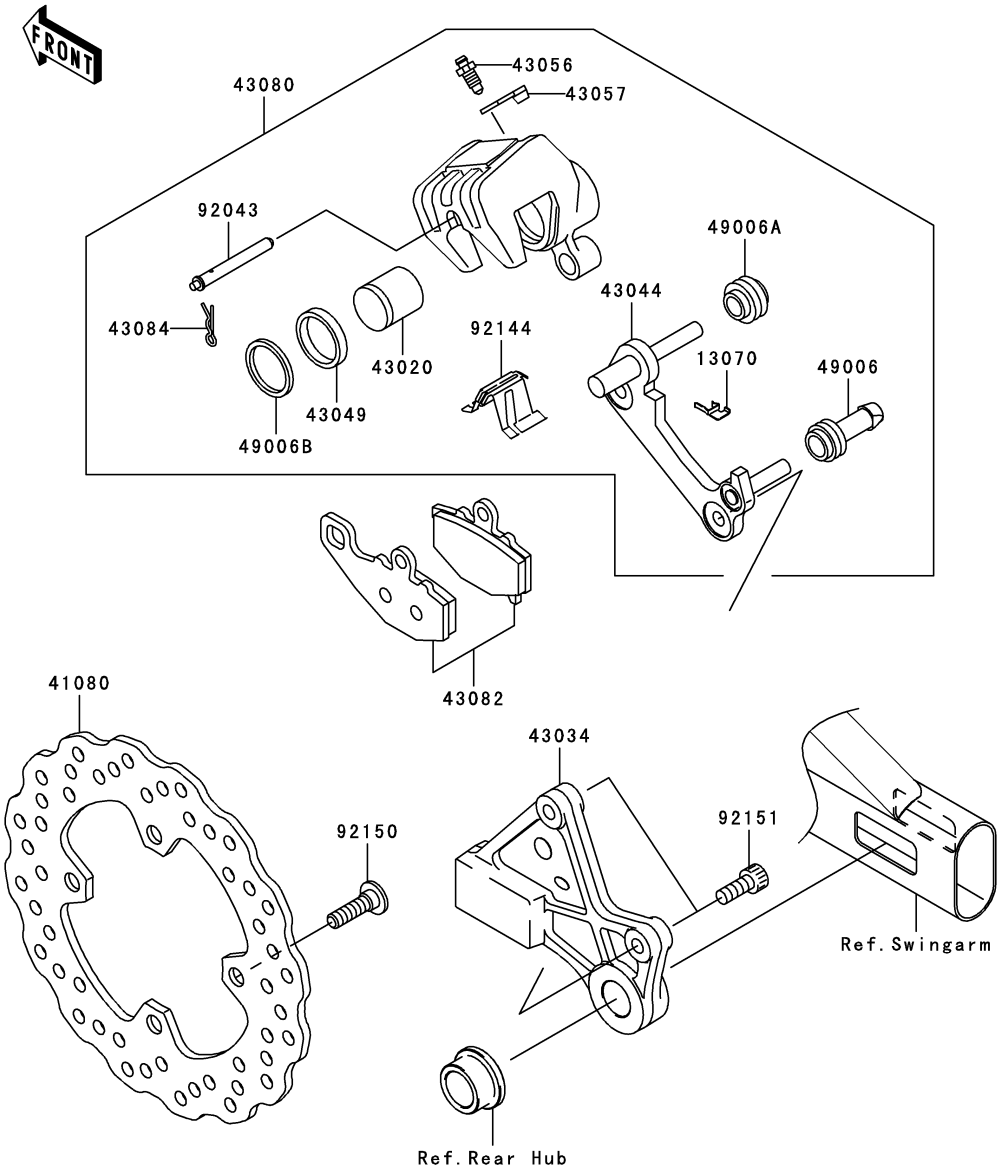

Ref. No.	Part No.	Description	Spec Code	Quantity-ER650 '06 A6S	'07 A7F	'08 A8F		
13070	13070-0045	GUIDE,BRAKE PAD		1	1	1		
41080	41080-0040	DISC,RR		1	1	1		
43020	43020-1119	PISTON-COMP-BRAKE		1	1	1		
43034	43034-0004	HOLDER-BRAKE,REAR CALIPER		1	1	1		
43044	43044-1110	HOLDER-COMP-CALIPER,RR		1	1	1		
43049	43049-1097	PACKING,PISTON SEAL		1	1	1		
43056	43056-1054	BREATHER-BRAKE		1	1	1		
43057	43057-003	CAP-BREATHER		1	1	1		
43080	43080-5061-DJ	CALIPER-SUB-ASSY,RR,BLACK		1	1	1		
43082	43082-1213	PAD-ASSY-BRAKE		1	1	1		
43084	43084-003	CLAMP,PAD		1	1	1		
49006	49006-1054	BOOT,CALIPER		1	1	1		
49006A	49006-1095	BOOT,CALIPER		1	1	1		
49006B	49006-1212	BOOT,PISTON SEAL		1	1	1		
92043	92043-1489	PIN,PAD		1	1	1		
92144	92144-1719	SPRING,PAD		1	1	1		
92150	92150-1771	BOLT,SOCKET,8X30		4	4	4		
92151	92151-1289	BOLT,SOCKET,8X20		2	2	2		

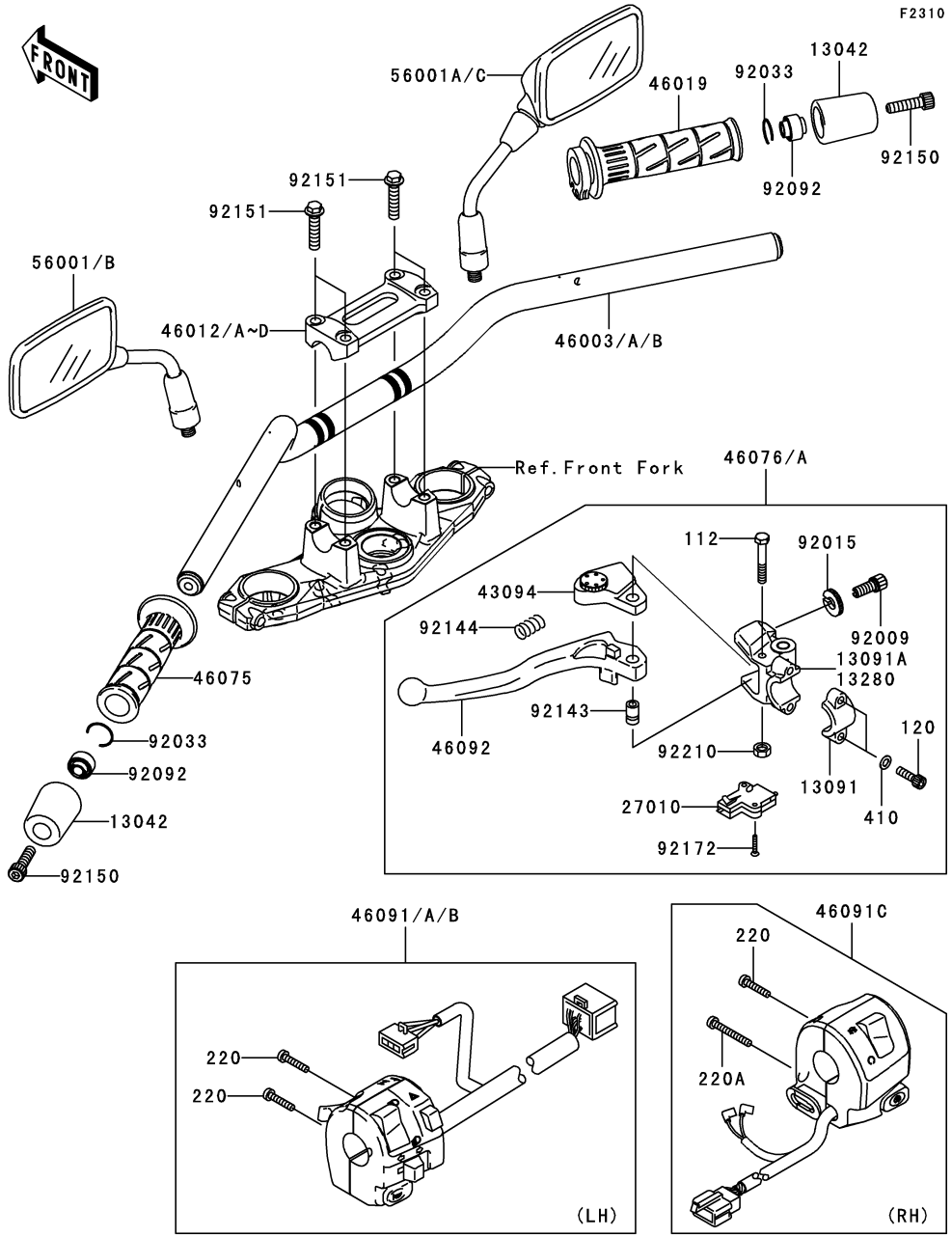

Ref. No.	Part No.	Description	Spec Code	Quantity-ER650 '06 A6S	'07 A7F	'08 A8F		
13042	13042-1006	WEIGHT,HANDLE		2	2	2		
13091	13091-1624	HOLDER,CLUTCH LEVER		1	1	1		
13091A	13091-1652	HOLDER,CLUTCH LEVER		1	1			
13280	13280-0248	HOLDER,CLUTCH LEVER				1		
27010	27010-1094	SWITCH,CLUTCH,BLACK		1	1	1		
43094	43094-1053	ADJUSTER,CLUTCH LEVER		1	1	1		
46003	46003-0093-10	HANDLE,BLACK				1		
46003A	46003-0093-458	HANDLE,P.SILVER		1	1	1		
46003B	46003-0093-718	HANDLE,BLACK			1			
46012	46012-0010-11E	HOLDER-HANDLE,UPP,F.S.BLACK			1			
46012A	46012-0010-793	HOLDER-HANDLE,UPP,M.BRONZE		1				
46012B	46012-0010-796	HOLDER-HANDLE,UPP,P.RED		1	1			
46012C	46012-0047-18R	HOLDER-HANDLE,UPP,BLACK				1		
46012D	46012-0047-458	HOLDER-HANDLE,UPP,P.SILVER				1		
46019	46019-0001	GRIP-ASSY,THROTTLE		1	1	1		
46075	46075-1144	GRIP,LH		1	1	1		
46076	46076-0045	LEVER-ASSY-GRIP,CLUTCH				1		
46076A	46076-1180	LEVER-ASSY-GRIP,CLUTCH		1	1			
46091	46091-0082	HOUSING-ASSY-CONTROL,LH		1				
46091A	46091-0086	HOUSING-ASSY-CONTROL,LH			1			
46091B	46091-0118	HOUSING-ASSY-CONTROL,LH				1		
46091C	46091-1891	HOUSING-ASSY-CONTROL,RH		1	1	1		
46092	46092-1162	LEVER-GRIP,CLUTCH		1	1	1		
56001	56001-0051	MIRROR-ASSY,LH		1	1			
56001A	56001-0052	MIRROR-ASSY,RH		1	1			
56001B	56001-0121	MIRROR-ASSY,LH				1		
56001C	56001-0122	MIRROR-ASSY,RH				1		
92009	92009-1134	SCREW,CABLE ADJUST,8MM,BLACK		1	1	1		
92015	92015-1197	NUT,CABLE ADJUST LOCK,8MM,BLK		1	1	1		
92033	92033-1102	RING-SNAP,OD=22.2		2	2	2		
92092	92092-1018	BUSHING-RUBBER,HANDLE		2	2	2		
92143	92143-1379	COLLAR		1	1	1		
92144	92144-1467	SPRING		1	1	1		
92150	92150-1604	BOLT,SOCKET,8X30		2	2	2		
92151	92151-1537	BOLT,FLANGED,8X35		4	4	4		
92172	92172-0183	SCREW,3X16		2	2	2		
92210	92210-0006	NUT,LOCK,6MM		1	1	1		
112	112C0640	BOLT-UPSET,6X40		1	1	1		
120	120CB0620	BOLT-SOCKET,6X20		2	2	2		
220	220AB0525	SCREW-PAN-CROS,5X25		3	3	3		
220A	220AB0540	SCREW-PAN-CROSS,5X40		1	1	1		
410	410F0600	WASHER-PLAIN-SMALL,6MM,BLACK		2	2	2		

F2340

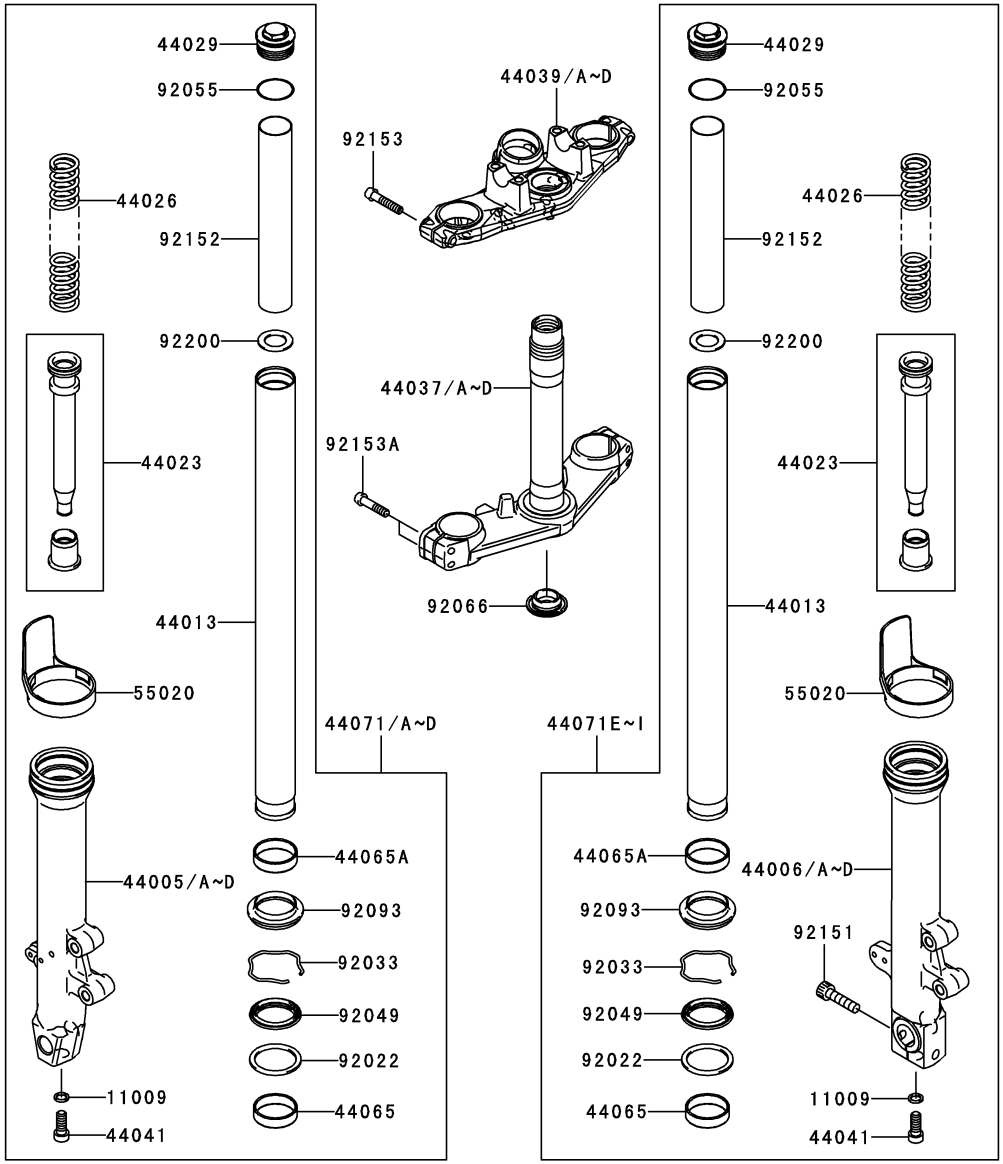

Ref. No.	Part No.	Description	Spec Code	Quantity-ER650 '06 A6S	'07 A7F	'08 A8F		
11009	11009-1325	GASKET,PIPE-COMP-SUSP		2	2	2		
44005	44005-0045-11E	PIPE-LEFT FORK OUTER,F.S.BLACK			1			
44005A	44005-0045-18R	PIPE-LEFT FORK OUTER,BLACK				1		
44005B	44005-0045-458	PIPE-LEFT FORK OUTER,P.SILVER				1		
44005C	44005-0045-793	PIPE-LEFT FORK OUTER,M.BRONZE		1				
44005D	44005-0045-796	PIPE-LEFT FORK OUTER,P.RED		1	1			
44006	44006-0045-11E	PIPE-RIGHT FORK OUTER,BLACK			1			
44006A	44006-0045-18R	PIPE-RIGHT FORK OUTER,BLACK				1		
44006B	44006-0045-458	PIPE-RIGHT FORK OUTER,P.SILVER				1		
44006C	44006-0045-793	PIPE-RIGHT FORK OUTER,M.BRONZE		1				
44006D	44006-0045-796	PIPE-RIGHT FORK OUTER,P.RED		1	1			
44013	44013-0055	PIPE-FORK INNER		2	2	2		
44023	44023-0040	CYLINDER-SET-FORK		2	2	2		
44026	44026-0084	SPRING-FRONT FORK		2	2	2		
44029	44029-0005	SEAT-FORK SPRING		2	2	2		
44037	44037-0050-11E	HOLDER-FORK UNDER,F.S.BLACK			1			
44037A	44037-0050-18R	HOLDER-FORK UNDER,BLACK				1		
44037B	44037-0050-458	HOLDER-FORK UNDER,P.SILVER				1		
44037C	44037-0050-793	HOLDER-FORK UNDER,M.BRONZE		1				
44037D	44037-0050-796	HOLDER-FORK UNDER,P.RED		1	1			
44039	44039-0033-11E	HOLDER-FORK UPPER,F.S.BLACK			1			
44039A	44039-0033-18R	HOLDER-FORK UPPER,BLACK				1		
44039B	44039-0033-458	HOLDER-FORK UPPER,P.SILVER				1		
44039C	44039-0033-793	HOLDER-FORK UPPER,M.BRONZE		1				
44039D	44039-0033-796	HOLDER-FORK UPPER,P.RED		1	1			
44041	44041-040	BOLT,SOCKET,FORK CYLINDER		2	2	2		
44065	44065-0014	BUSHING-FRONT FORK,INNER TUBE		2	2	2		
44065A	44065-1115	BUSHING-FRONT FORK,OUTER TUBE		2	2	2		
44071	44071-0258-11E	DAMPER-ASSY,FORK,LH,F.S.BLACK			1			
44071A	44071-0258-18R	DAMPER-ASSY,FORK,LH,BLACK				1		
44071B	44071-0258-458	DAMPER-ASSY,FORK,LH,P.SILVER				1		
44071C	44071-0258-793	DAMPER-ASSY,FORK,LH,M.BRONZE		1				
44071D	44071-0258-796	DAMPER-ASSY,FORK,LH,P.RED		1	1			
44071E	44071-0259-11E	DAMPER-ASSY,FORK,RH,F.S.BLACK			1			
44071F	44071-0259-18R	DAMPER-ASSY,FORK,RH,BLACK				1		
44071G	44071-0259-458	DAMPER-ASSY,FORK,RH,P.SILVER				1		
44071H	44071-0259-793	DAMPER-ASSY,FORK,RH,M.BRONZE		1				
44071I	44071-0259-796	DAMPER-ASSY,FORK,RH,P.RED		1	1			
55020	55020-1691	GUARD,FORK		2	2	2		

F2340

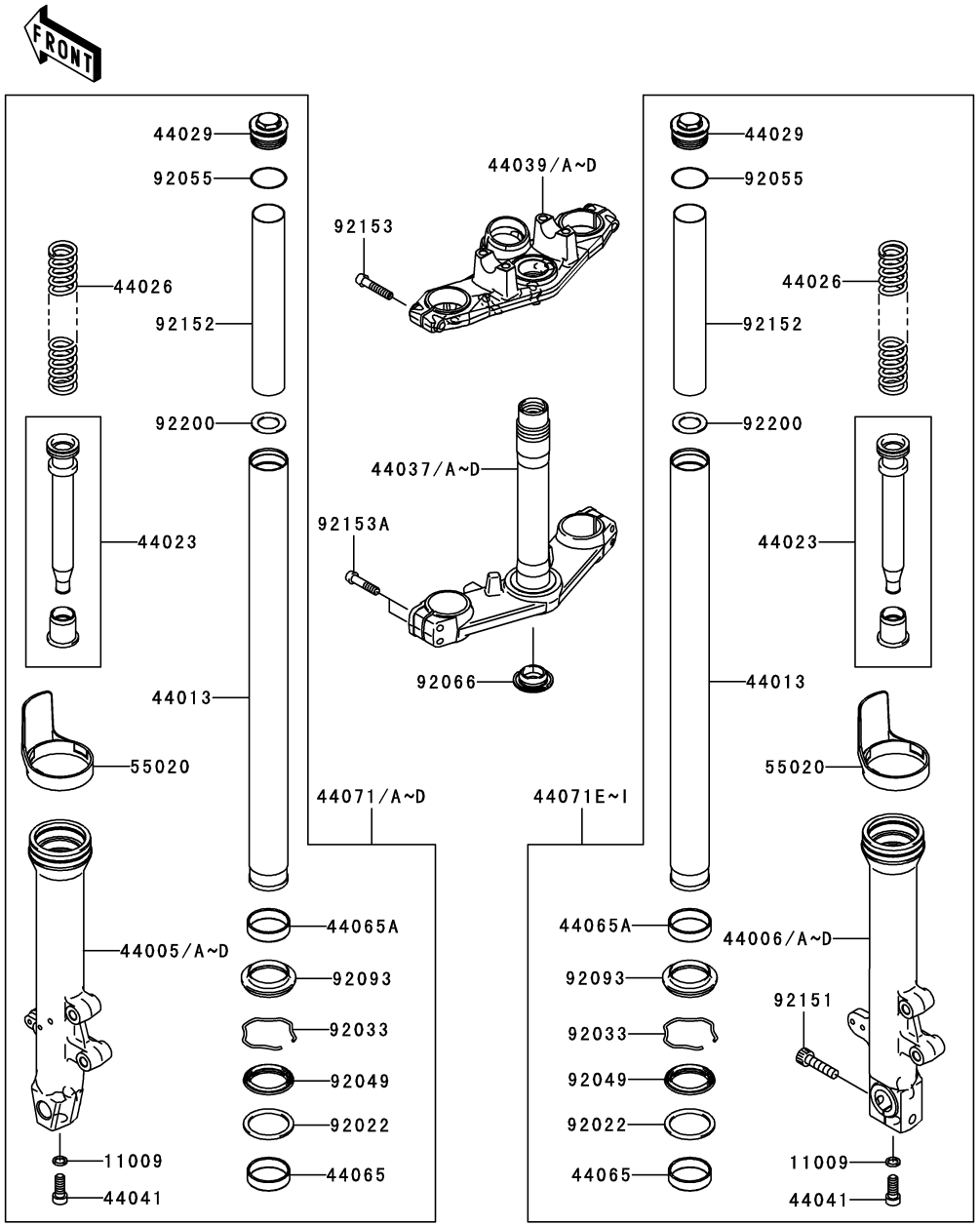

Ref. No.	Part No.	Description	Spec Code	Quantity-ER650 '06 A6S	'07 A7F	'08 A8F		
92022	92022-1298	WASHER,FORK OUTER TUBE		2	2	2		
92033	92033-1036	RING-SNAP		2	2	2		
92049	92049-0073	SEAL-OIL		2	2	2		
92055	92055-1321	RING-O		2	2	2		
92066	92066-0032	PLUG		1	1	1		
92093	92093-1472	SEAL,FORK OUTER TUBE		2	2	2		
92151	92151-1357	BOLT,SOCKET,10X40		1	1	1		
92152	92152-0410	COLLAR,FORK		2	2	2		
92153	92153-0506	BOLT,SOCKET,8X40		2	2	2		
92153A	92153-1472	BOLT,SOCKET,8X35		4	4	4		
92200	92200-1302	WASHER		2	2	2		

F2410

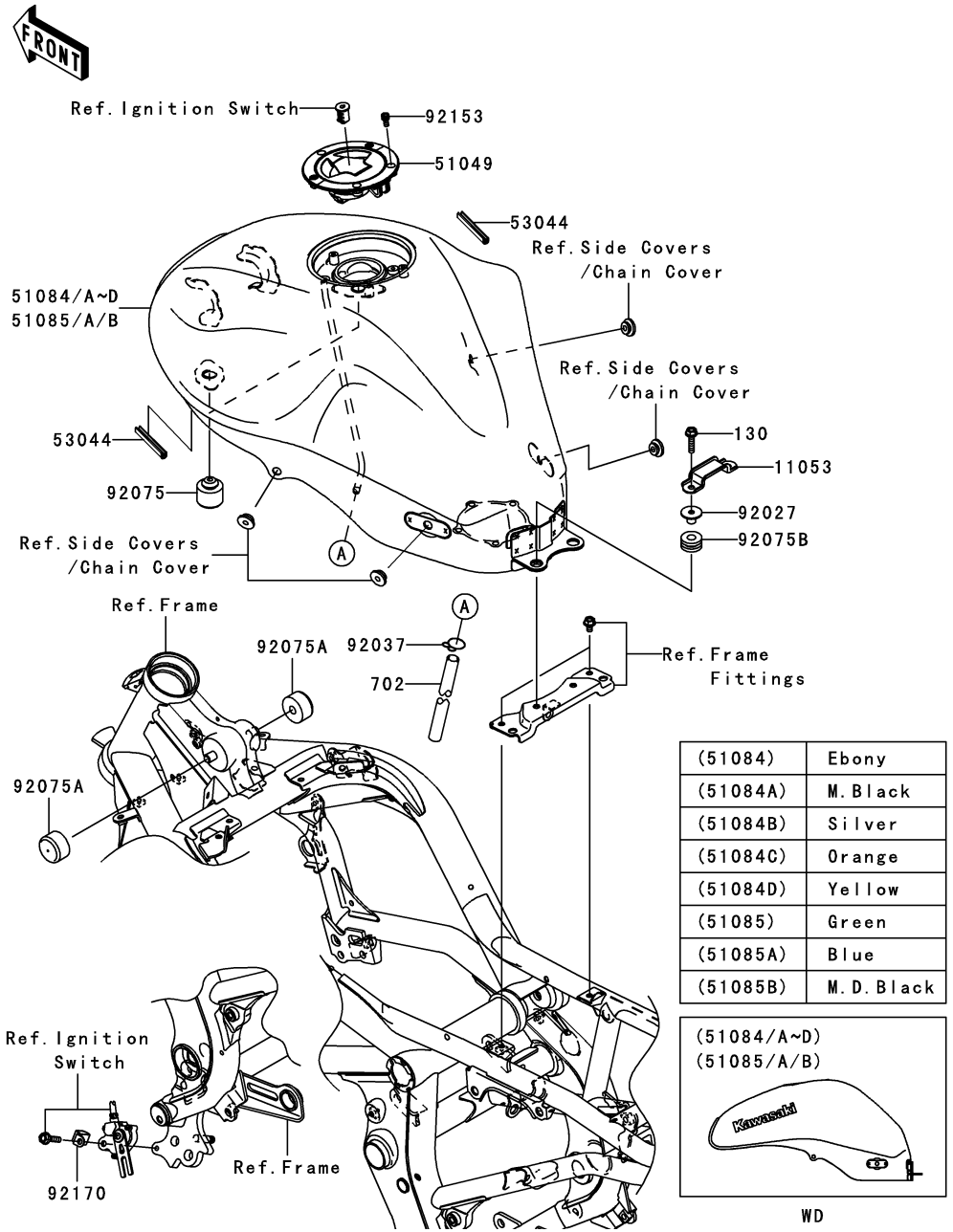

Ref. No.	Part No.	Description	Spec Code	Quantity-ER650				
				’06	’07	’08		
				A6S	A7F	A8F		
11053	11053-1812	BRACKET,SEAT		1	1	1		
51049	51049-0012	CAP-TANK,FUEL		1	1	1		
51084	51084-5138-H8	TANK-COMP-FUEL,EBONY		1				
51084A	51084-5138-17K	TANK-COMP-FUEL,M.BLACK			1			
51084B	51084-5139-474	TANK-COMP-FUEL,G.SILVER		1	1			
51084C	51084-5140-17H	TANK-COMP-FUEL,P.ORANGE			1			
51084D	51084-5140-789	TANK-COMP-FUEL,V.YELLOW		1				
51085	51085-5363-15P	TANK-COMP-FUEL,C.L.GREEN				1		
51085A	51085-5365-15D	TANK-COMP-FUEL,C.P.BLUE				1		
51085B	51085-5365-15Q	TANK-COMP-FUEL,M.D.BLACK				1		
53044	53044-1249	TRIM,L=60		2	2	2		
92027	92027-251	COLLAR,L=13.1		2	2	2		
92037	92037-010	CLAMP,TUBE		1	1	1		
92075	92075-1002	DAMPER		2	2	2		
92075A	92075-125	DAMPER,FUEL TANK		2	2	2		
92075B	92075-1690	DAMPER		2	2	2		
92153	92153-1616	BOLT,SOCKET,5X16		3	3	3		
92170	92170-1833	CLAMP		1	1	1		
130	130BB0625	BOLT-FLANGED,6X25		2	2	2		
702	702A06750	TUBE-RUBBER,6X9X750		1	1	1		

F2510

Ref. No.	Part No.	Description	Spec Code	Quantity-ER650				
				’06	’07	’08		
				A6S	A7F	A8F		
53003	53003-0058-MA	LEATHER,SEAT,BLACK		1	1	1		
53066	53066-0136-MA	SEAT-ASSY,DUAL,BLACK		1	1	1		
92161	92161-0149	DAMPER,SEAT		1	1	1		
92161A	92161-1321	DAMPER,SEAT		1	1	1		

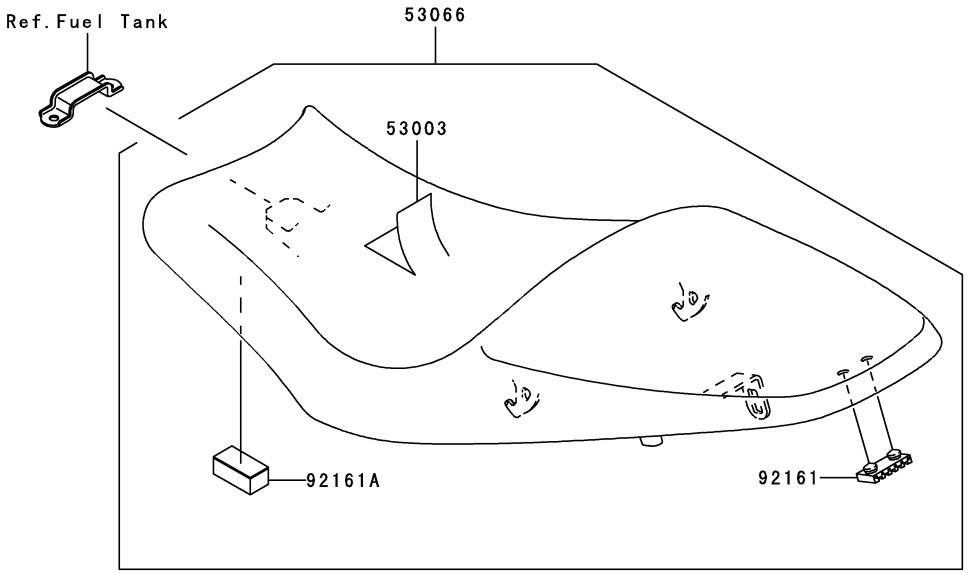

F2530

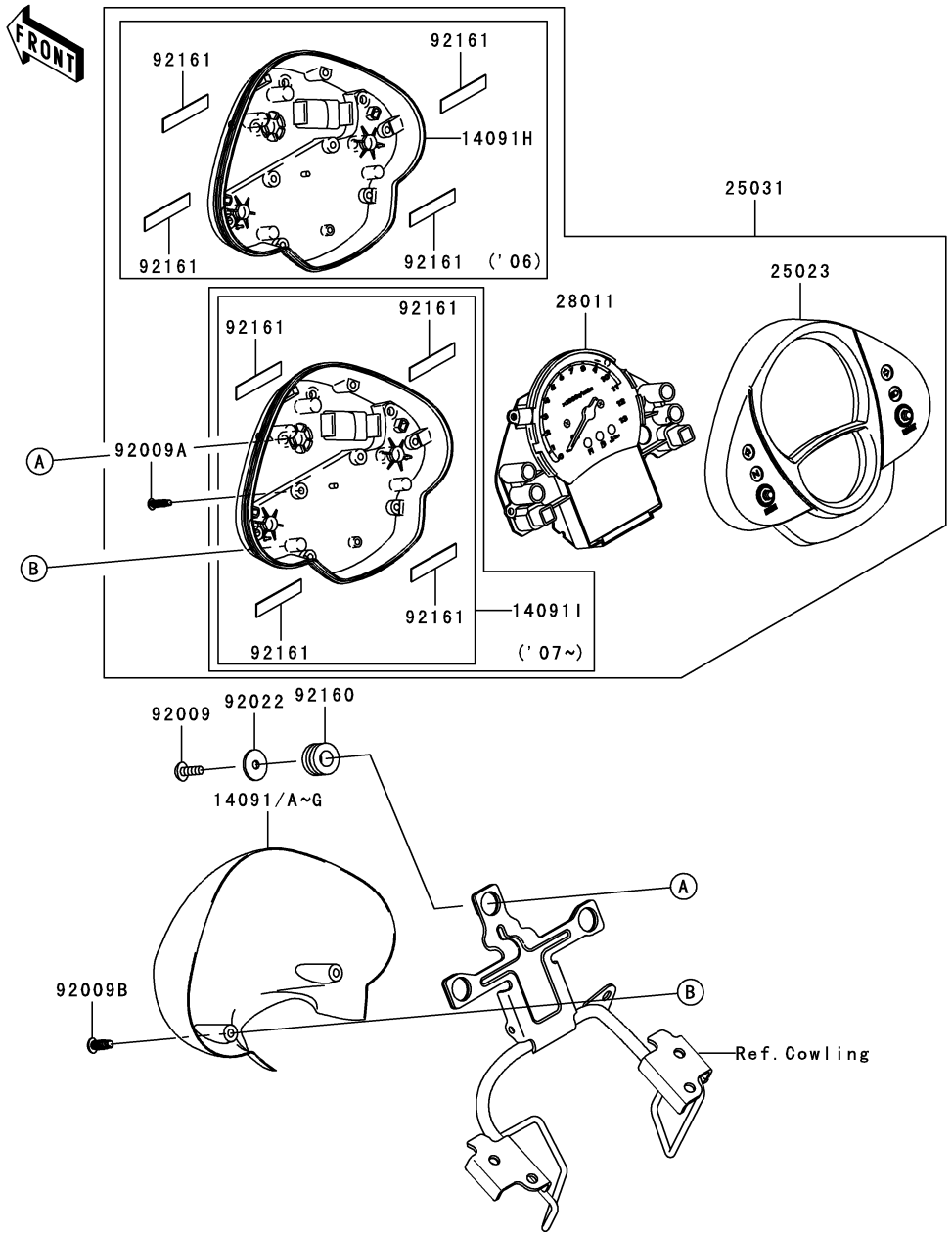

Ref. No.	Part No.	Description	Spec Code	Quantity-ER650 '06 A6S	'07 A7F	'08 A8F		
14091	14091-0465-H8	COVER,METER,EBONY		1				
14091A	14091-0465-15D	COVER,METER,C.P.BLUE				1		
14091B	14091-0465-15P	COVER,METER,C.L.GREEN				1		
14091C	14091-0465-15Q	COVER,METER,M.D.BLACK				1		
14091D	14091-0465-17H	COVER,METER,P.ORANGE			1			
14091E	14091-0465-17K	COVER,METER,M.BLACK			1			
14091F	14091-0465-474	COVER,METER,G.SILVER		1	1			
14091G	14091-0465-789	COVER,METER,V.YELLOW		1				
14091H	14091-0466	COVER,METER,LWR		1				
14091I	14091-0600	COVER,METER,LWR			1	1		
25023	25023-0014	COVER-METER CASE,UPP		1	1	1		
25031	25031-0111	METER-ASSY		1	1	1		
28011	28011-0033	METER,TACHO&LCD		1	1	1		
92009	92009-1197	SCREW,TAPPING,5X14		3	3	3		
92009A	92009-1592	SCREW,TAPPING,3X14		8	8	8		
92009B	92009-1593	SCREW,TAPPING,4X14		2	2	2		
92022	92022-1405	WASHER,5.5X20X1.2		3	3	3		
92160	92160-1167	DAMPER		3	3	3		
92161	92161-0354	DAMPER		4	4	4		

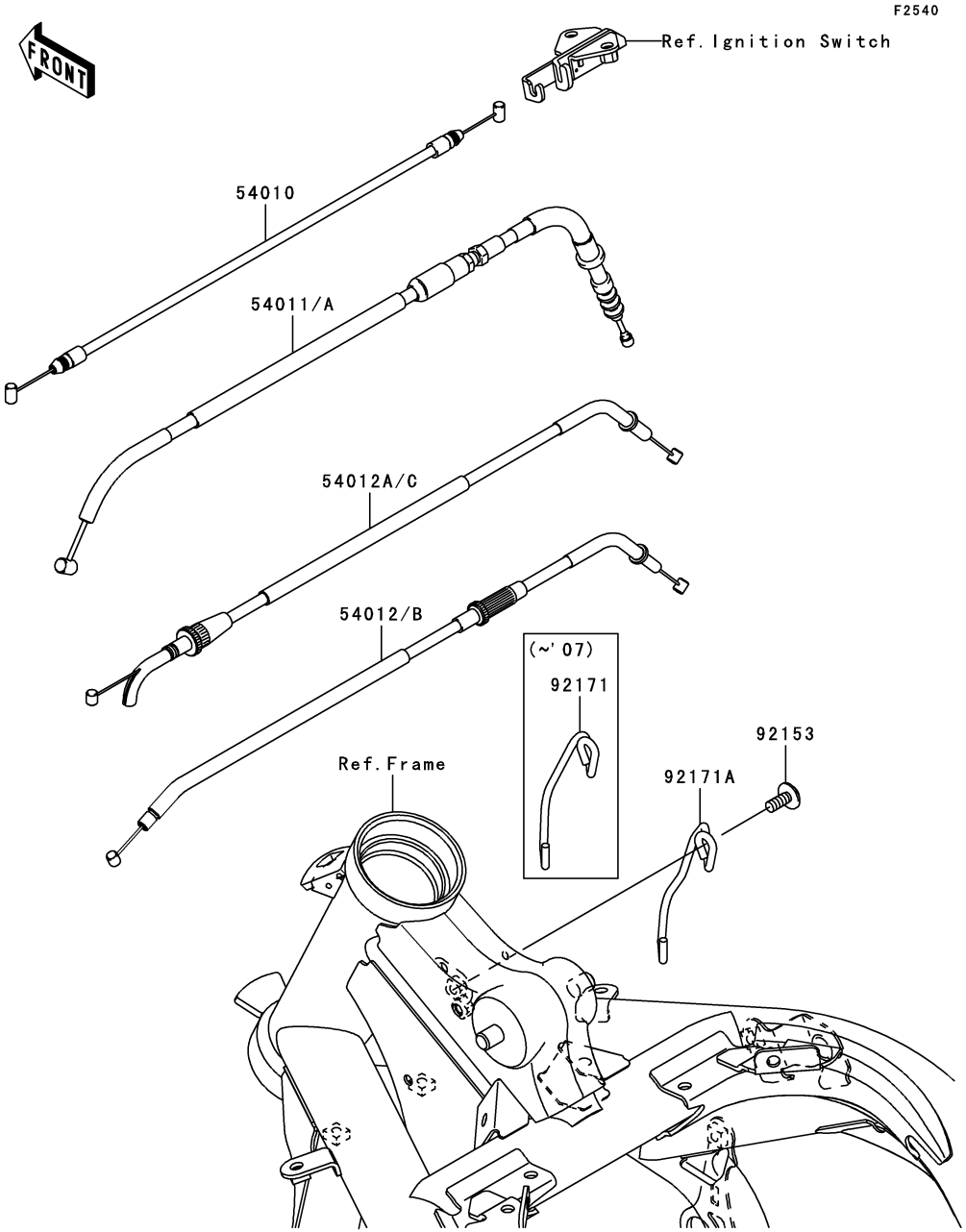

Ref. No.	Part No.	Description	Spec Code	Quantity-ER650 '06 A6S	'07 A7F	'08 A8F		
54010	54010-0029	CABLE,SEAT LOCK		1	1	1		
54011	54011-0046	CABLE-CLUTCH		1	1			
54011A	54011-0083	CABLE-CLUTCH				1		
54012	54012-0164	CABLE-THROTTLE,CLOSING		1	1			
54012A	54012-0177	CABLE-THROTTLE,OPENING		1	1			
54012B	54012-0225	CABLE-THROTTLE,CLOSING				1		
54012C	54012-0226	CABLE-THROTTLE,OPENING				1		
92153	92153-1446	BOLT,SOCKET,6X14		1	1	1		
92171	92171-0658	CLAMP,CABLE		1	1			
92171A	92171-0971	CLAMP,CABLE				1		

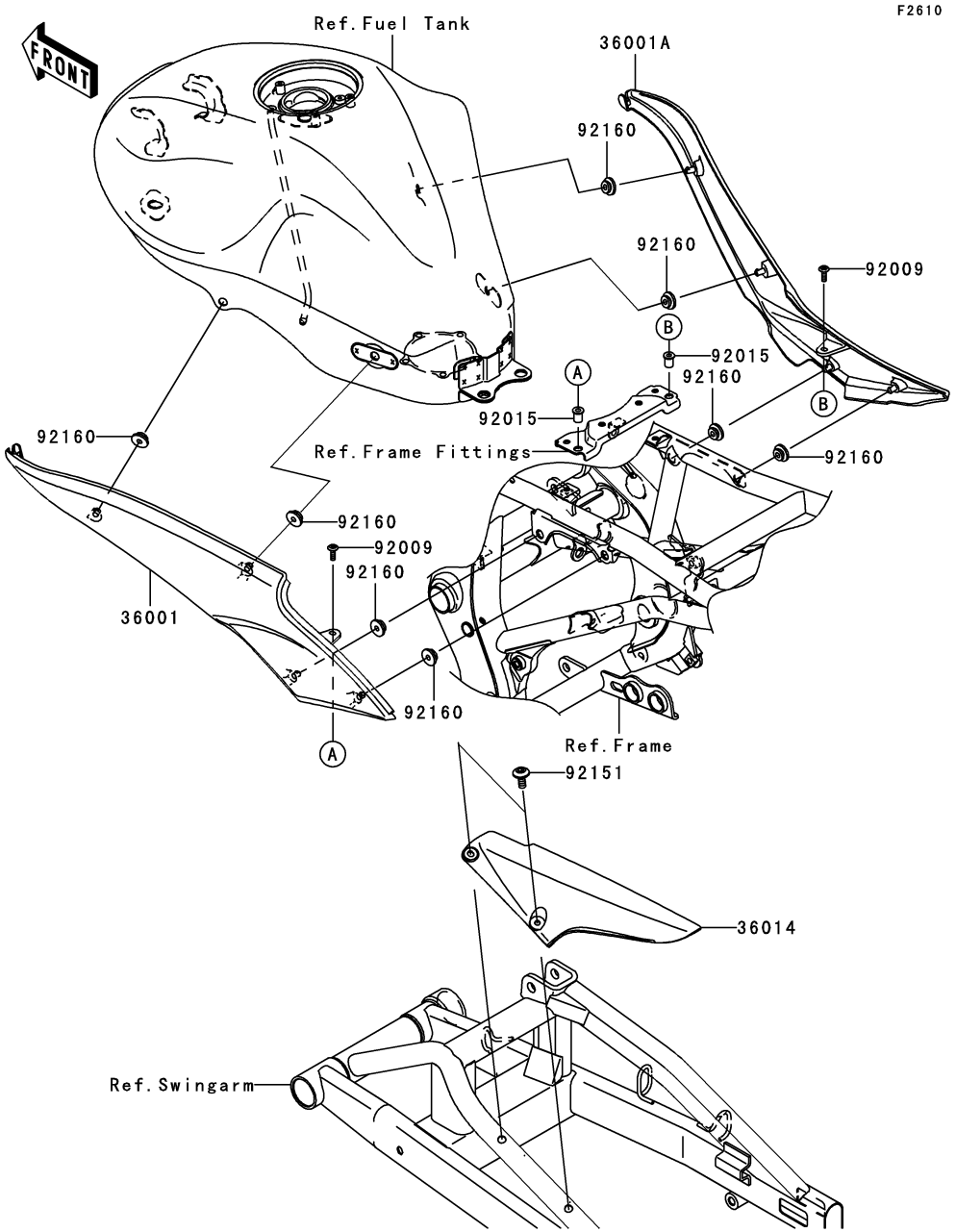

Ref. No.	Part No.	Description	Spec Code	Quantity-ER650 '06 A6S	'07 A7F	'08 A8F		
36001	36001-0063-6Z	COVER-SIDE,LH,F.BLACK		1	1	1		
36001A	36001-0064-6Z	COVER-SIDE,RH,F.BLACK		1	1	1		
36014	36014-0027	CASE-CHAIN		1	1	1		
92009	92009-1909	SCREW,5X16		2	2	2		
92015	92015-1757	NUT,WELL,5MM		2	2	2		
92151	92151-1654	BOLT,SOCKET,6X14		2	2	2		
92160	92160-1613	DAMPER		8	8	8		

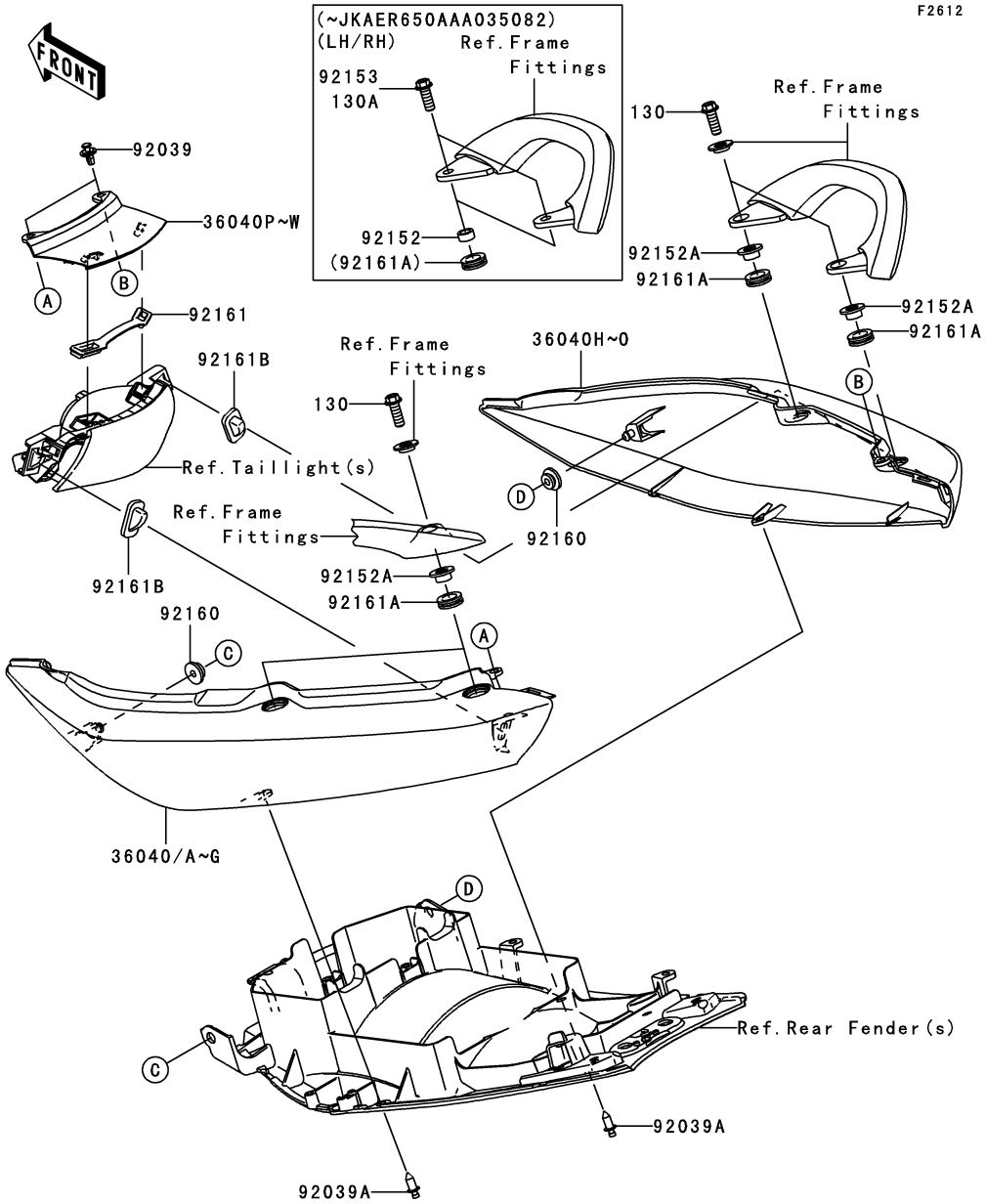

Ref. No.	Part No.	Description	Spec Code	Quantity-ER650 '06 A6S	'07 A7F	'08 A8F		
36040	36040-0037-H8	COVER-TAIL,LH,EBONY		1				
36040A	36040-0037-15D	COVER-TAIL,LH,C.P.BLUE				1		
36040B	36040-0037-15P	COVER-TAIL,LH,C.L.GREEN				1		
36040C	36040-0037-15Q	COVER-TAIL,LH,M.D.BLACK				1		
36040D	36040-0037-17H	COVER-TAIL,LH,P.ORANGE			1			
36040E	36040-0037-17K	COVER-TAIL,LH,M.BLACK			1			
36040F	36040-0037-474	COVER-TAIL,LH,G.SILVER		1	1			
36040G	36040-0037-789	COVER-TAIL,LH,V.YELLOW		1				
36040H	36040-0038-H8	COVER-TAIL,RH,EBONY		1				
36040I	36040-0038-15D	COVER-TAIL,RH,C.P.BLUE				1		
36040J	36040-0038-15P	COVER-TAIL,RH,C.L.GREEN				1		
36040K	36040-0038-15Q	COVER-TAIL,RH,M.D.BLACK				1		
36040L	36040-0038-17H	COVER-TAIL,RH,P.ORANGE			1			
36040M	36040-0038-17K	COVER-TAIL,RH,M.BLACK			1			
36040N	36040-0038-474	COVER-TAIL,RH,G.SILVER		1	1			
36040O	36040-0038-789	COVER-TAIL,RH,V.YELLOW		1				
36040P	36040-0039-H8	COVER-TAIL,CNT,EBONY		1				
36040Q	36040-0039-15D	COVER-TAIL,CNT,C.P.BLUE				1		
36040R	36040-0039-15P	COVER-TAIL,CNT,C.L.GREEN				1		
36040S	36040-0039-15Q	COVER-TAIL,CNT,M.D.BLACK				1		
36040T	36040-0039-17H	COVER-TAIL,CNT,P.ORANGE			1			
36040U	36040-0039-17K	COVER-TAIL,CNT,M.BLACK			1			
36040V	36040-0039-474	COVER-TAIL,CNT,G.SILVER		1	1			
36040W	36040-0039-789	COVER-TAIL,CNT,V.YELLOW		1				
92039	92039-1227	RIVET		2	2	2		
92039A	92039-1283	RIVET		2	2	2		
92152	92152-0312	COLLAR,9.2X13.8X6.5		4	4			
	(	-	JKAER650AAA035082)					
92152A	92152-0550	COLLAR			4	4		
	(	JKAER650AAA035083 -	)					
92153	92153-1503	BOLT,FLANGED,8X20		4				
92160	92160-1613	DAMPER		2	2	2		
92161	92161-0191	DAMPER,TAIL LAMP		1	1	1		
92161A	92161-0279	DAMPER		4	4	4		
92161B	92161-0280	DAMPER		2	2	2		
130	130CB0825	BOLT-FLANGED			4	4		
	(	JKAER650AAA035083 -	)					
130A	130W0822	BOLT-FLANGED,8X22			4			
	(	-	JKAER650AAA035082)					

F2710

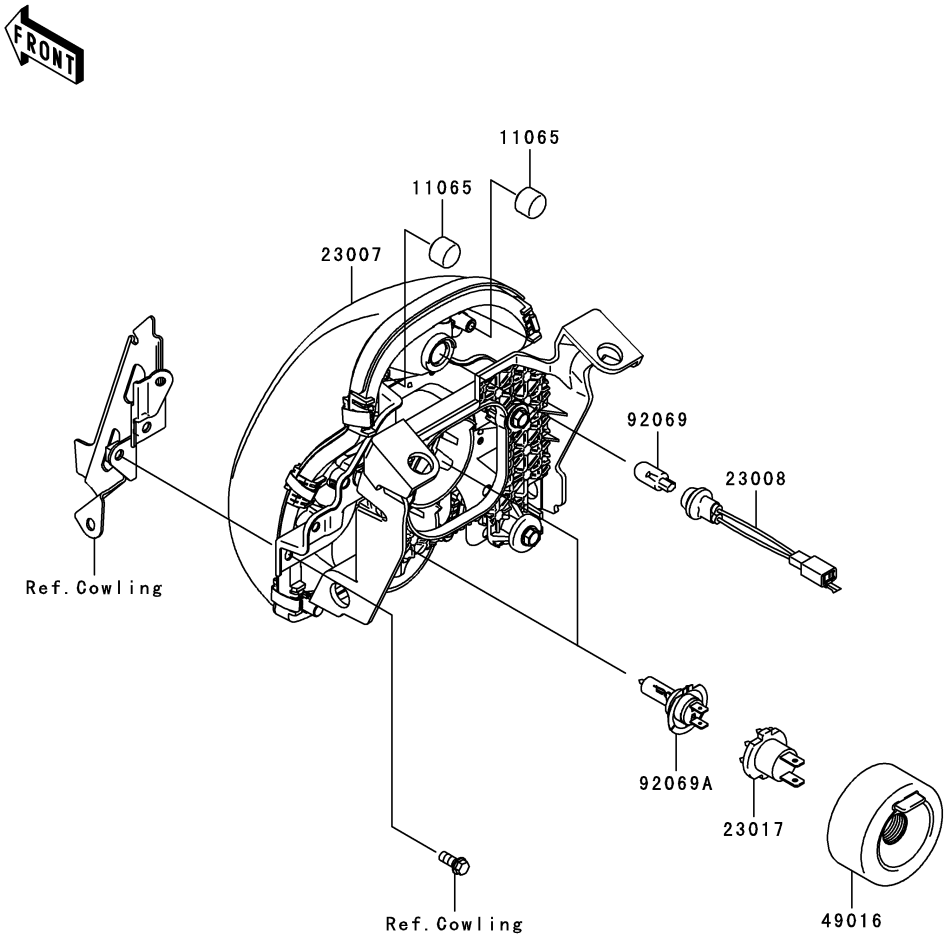

Ref. No.	Part No.	Description	Spec Code	Quantity-ER650				
				’06	’07	’08		
				A6S	A7F	A8F		
11065	11065-0135	CAP		2	2	2		
23007	23007-0051	LENS-COMP,HEAD LAMP		1	1	1		
23008	23008-0051	SOCKET-ASSY,HEAD LAMP		1	1	1		
23017	23017-1067	SOCKET,HEAD LAMP		2	2	2		
49016	49016-0017	COVER-SEAL,HEAD LAMP		2	2	2		
92069	92069-1016	BULB,12V 5W		1	1	1		
92069A	92069-1126	BULB,12V 55W,H7		2	2	2		

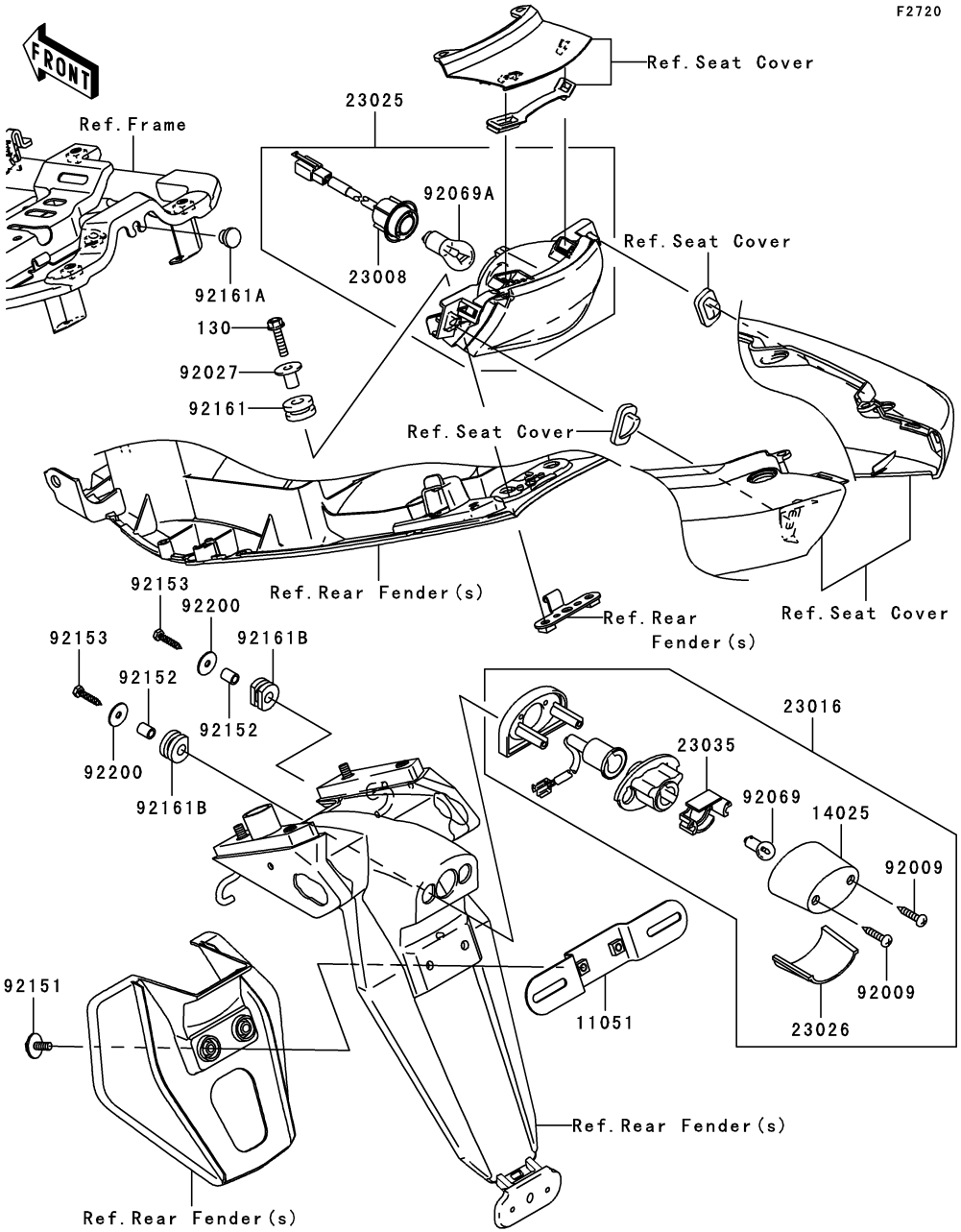

Ref. No.	Part No.	Description	Spec Code	Quantity-ER650 '06 A6S	'07 A7F	'08 A8F		
11051	11051-1503	BRACKET,LICENSE		1	1	1		
14025	14025-1725	COVER,LICENSE LAMP		1	1	1		
23008	23008-0042	SOCKET-ASSY,TAIL LAMP		1	1	1		
23016	23016-0003	LAMP-ASSY,LICENSE		1	1	1		
23025	23025-0018	LAMP-TAIL		1	1	1		
23026	23026-1064	LENS,LICENSE LAMP		1	1	1		
23035	23035-1066	REFLECTOR-LAMP,LICENSE		1	1	1		
92009	92009-1378	SCREW,TAPPING,4X20		2	2	2		
92027	92027-1847	COLLAR,L=16.1		2	2	2		
92069	92069-1055	BULB,12V 5W		1	1	1		
92069A	92069-1084	BULB,12V 21/5W		1	1	1		
92151	92151-1241	BOLT,6X25		2	2	2		
92152	92152-0372	COLLAR,6X9X11.5		2	2	2		
92153	92153-1424	BOLT,TAPPING,5X25		2	2	2		
92161	92161-0163	DAMPER		2	2	2		
92161A	92161-1084	DAMPER		1	1	1		
92161B	92161-1313	DAMPER		2	2	2		
92200	92200-0284	WASHER,5.5X20X1.2		2	2	2		
130	130BB0625	BOLT-FLANGED,6X25		2	2	2		

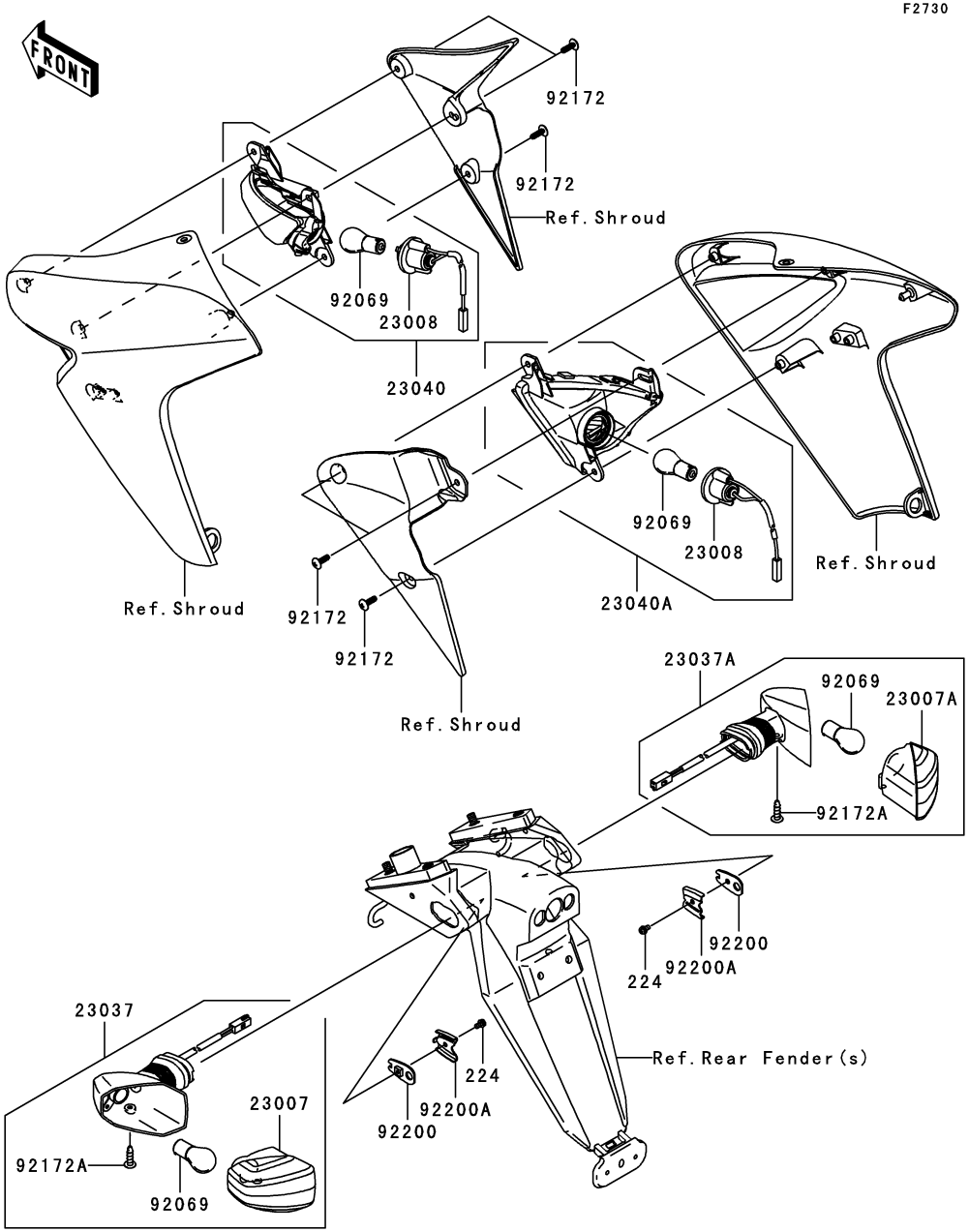

Ref. No.	Part No.	Description	Spec Code	Quantity-ER650 '06 A6S	'07 A7F	'08 A8F		
23007	23007-0063	LENS-COMP,SIGNAL LAMP,RR,LH		1	1	1		
23007A	23007-0064	LENS-COMP,SIGNAL LAMP,RR,RH		1	1	1		
23008	23008-0044	SOCKET-ASSY,SIGNAL LAMP,FR		2	2	2		
23037	23037-0077	LAMP-ASSY-SIGNAL,RR,LH		1	1	1		
23037A	23037-0078	LAMP-ASSY-SIGNAL,RR,RH		1	1	1		
23040	23040-0059	LAMP-SIGNAL,FR,LH		1	1	1		
23040A	23040-0060	LAMP-SIGNAL,FR,RH		1	1	1		
92069	92069-1125	BULB,12V 21W		4	4	4		
92172	92172-0175	SCREW,TAPPING,5X16		6	6	6		
92172A	92172-0242	SCREW,TAPPING 4X12		2	2	2		
92200	92200-0164	WASHER,SIGNAL LAMP		2	2	2		
92200A	92200-0165	WASHER,SIGNAL LAMP		2	2	2		
224	224AB0408	SCREW-PAN-WP-CROS,4X8		2	2	2		

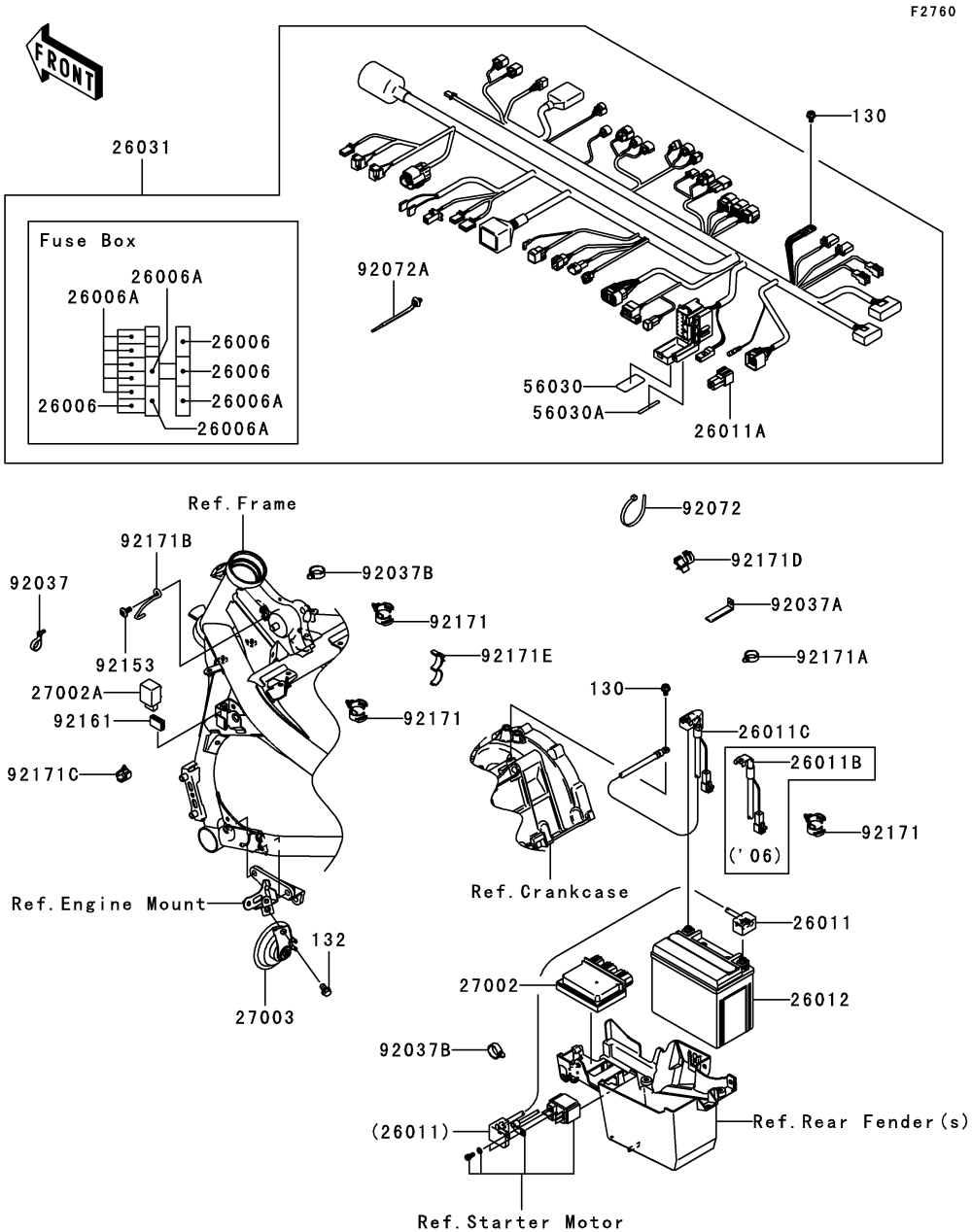

Ref. No.	Part No.	Description	Spec Code	Quantity-ER650 '06 A6S	'07 A7F	'08 A8F		
26006	26006-0001	FUSE,15A		3	3	3		
26006A	26006-1078	FUSE,10A		8	8	8		
26011	26011-0073	WIRE-LEAD,BATTERY(+)		1	1	1		
26011A	26011-0082	WIRE-LEAD		1	1	1		
26011B	26011-0096	WIRE-LEAD,BATTERY(-)		1				
26011C	26011-0099	WIRE-LEAD,BATTERY(-)			1	1		
26012	26012-0094	BATTERY,YTX12-BS,12V 10AH		1	1	1		
26031	26031-0400	HARNESS,MAIN		1	1	1		
27002	27002-0007	RELAY-ASSY		1	1	1		
27002A	27002-0010	RELAY-ASSY,TURN SIGNAL		1	1	1		
27003	27003-0051	HORN		1	1	1		
56030	56030-0046	LABEL,FUSE BOX		1	1	1		
56030A	56030-0098	LABEL,FUSE BOX		1	1	1		
92037	92037-1163	CLAMP,SPEED,L=58		1	1	1		
92037A	92037-1316	CLAMP,HARNESS		3	3	3		
92037B	92037-1827	CLAMP,HOSE		2	2	2		
92072	92072-1197	BAND,L=365		2	2	2		
92072A	92072-1414	BAND		13	13	13		
92153	92153-1446	BOLT,SOCKET,6X14		1	1	1		
92161	92161-0283	DAMPER,SIGNAL RELAY		1	1	1		
92171	92171-0069	CLAMP,DIA=20		3	3	3		
92171A	92171-0640	CLAMP		2	2	2		
92171B	92171-0657	CLAMP,HARNESS		1	1	1		
92171C	92171-1415	CLAMP,DIA=13		1	1	1		
92171D	92171-1424	CLAMP,DIA=15		1	1	1		
92171E	92171-1559	CLAMP,DIA=25		1	1	1		
130	130BA0610	BOLT-FLANGED,6X10		2	2	2		
132	132BB0812	BOLT-FLANGED-SMALL,8X12		1	1	1		

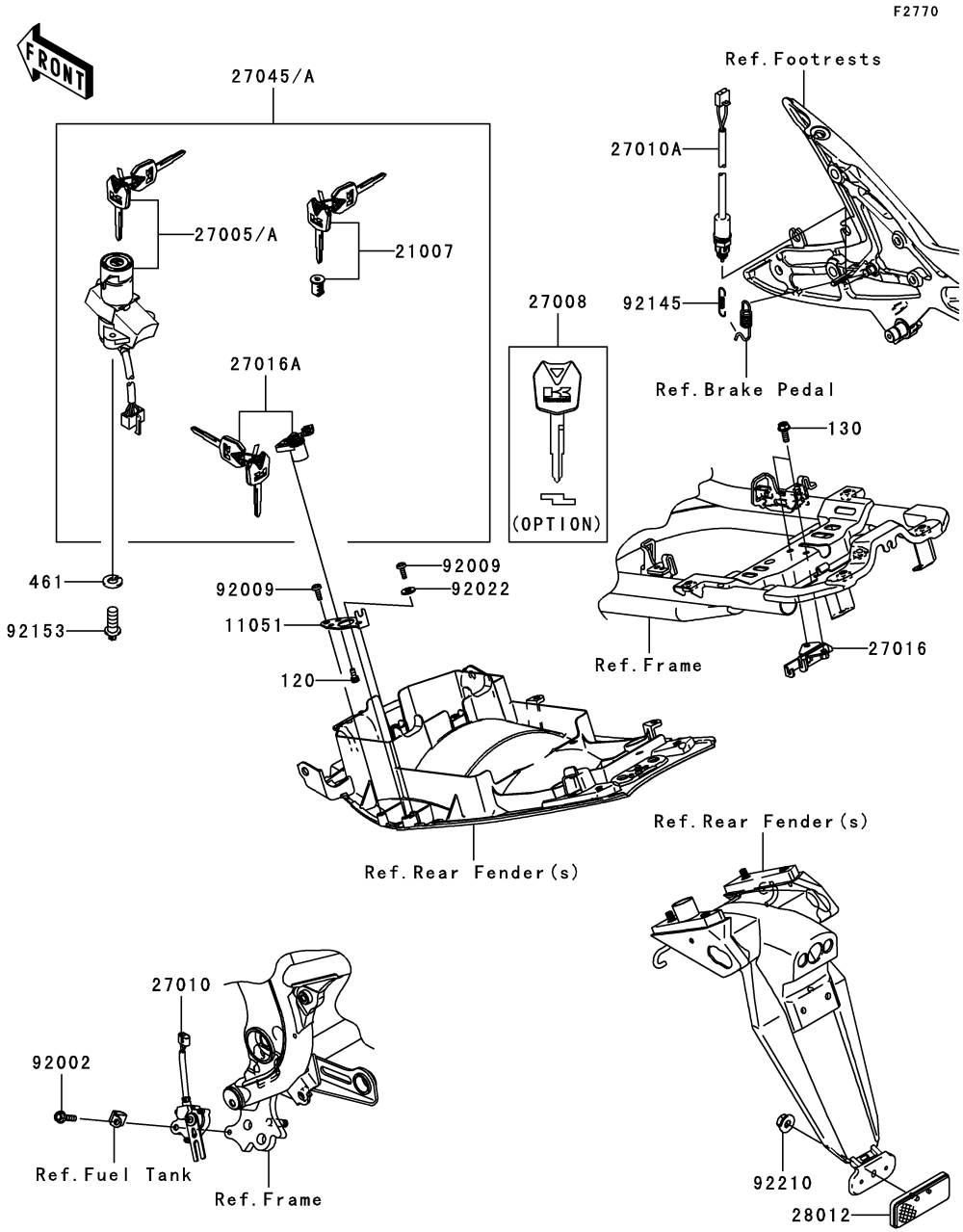

Ref. No.	Part No.	Description	Spec Code	Quantity-ER650 '06 A6S	'07 A7F	'08 A8F		
11051	11051-1370	BRACKET,SEAT LOCK		1	1	1		
21007	21007-5057	ROTOR,LOCK,TANK CAP		1	1	1		
27005	27005-5130	SWITCH-ASSY-IGNITION		1	1			
27005A	27005-5139	SWITCH-ASSY-IGNITION				1		
27008	27008-0030 (OPTION)	KEY-LOCK,BLANK		1	1	1		
27010	27010-1455	SWITCH,SIDE STAND		1	1	1		
27010A	27010-1479	SWITCH,REAR BRAKE		1	1	1		
27016	27016-1115	LOCK-ASSY,SEAT STRIKER		1	1	1		
27016A	27016-5309	LOCK-ASSY,SEAT		1	1	1		
27045	27045-5231	SWITCH-ASSY		1	1			
27045A	27045-5356	SWITCH-ASSY				1		
28012	28012-1077	REFLECTOR-REFLEX		1	1	1		
92002	92002-1582	BOLT,FLANGED,6X25		1	1	1		
92009	92009-3845	SCREW,6X14		2	2	2		
92022	92022-1342	WASHER,6.5X16X2		1	1	1		
92145	92145-0091	SPRING,REAR BRAKE SWITCH		1	1	1		
92153	92153-0967	BOLT,TORX,6X16		2	2	2		
92210	92210-0007	NUT,FLANGED,5MM		1	1	1		
120	120CB0512	BOLT-SOCKET,5X12		2	2	2		
130	130BB0612	BOLT-FLANGED,6X12		2	2	2		
461	461L0600	WASHER-SPRING		2	2	2		

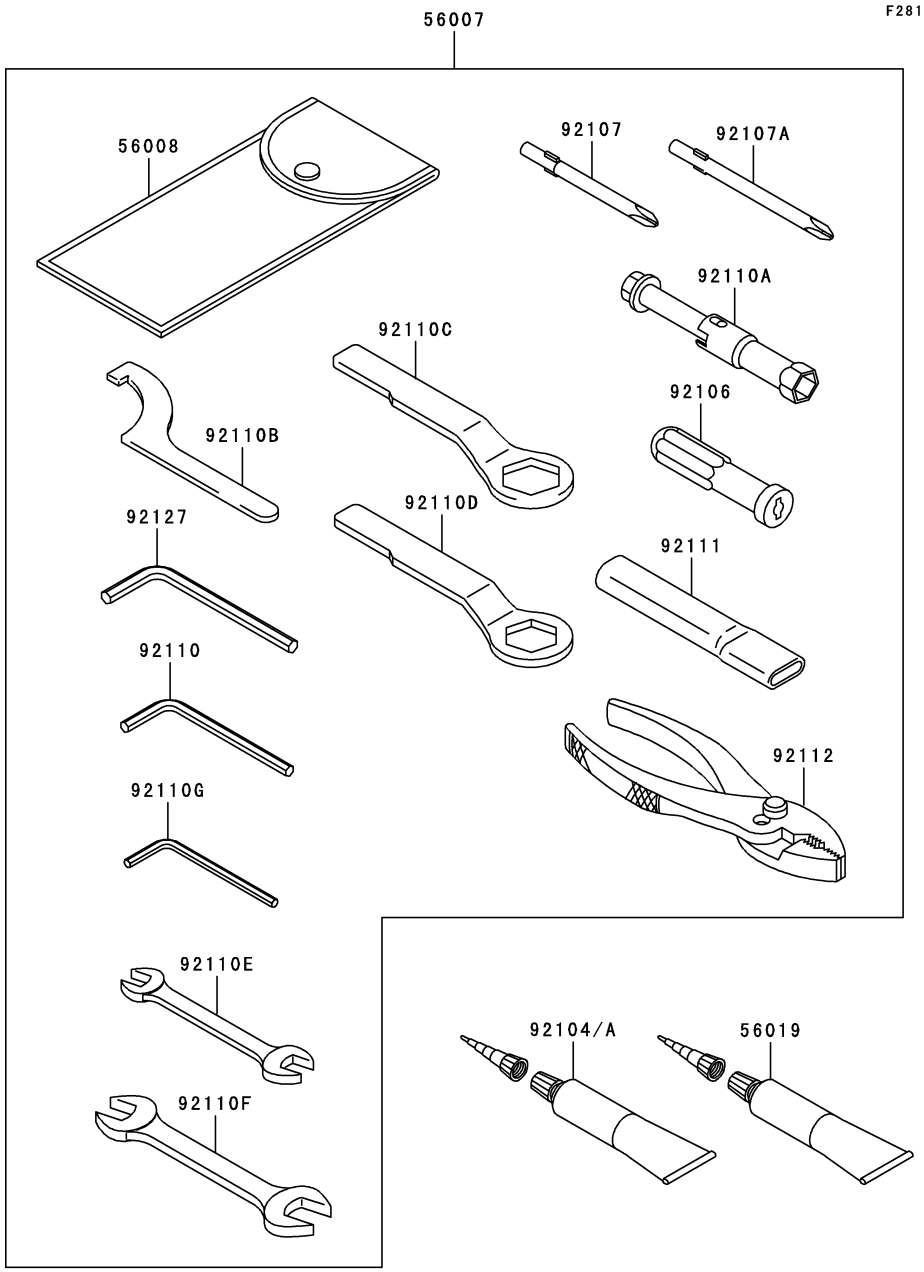

Ref. No.	Part No.	Description	Spec Code	Quantity-ER650				
				’06	’07	’08		
				A6S	A7F	A8F		
56007	56007-0026	TOOL-KIT		1	1	1		
56008	56008-1075	BAG,TOOL		1	1	1		
56019	56019-120	THREE BOND TB1211,HT/RS,WHITE		1	1	1		
92104	92104-0004	GASKET-LIQUID,TB1211F		1	1	1		
92104A	92104-1064	GASKET-LIQUID,BLACK TB1216B		1	1	1		
92106	92106-1001	GRIP-SCREW DRIVER		1	1	1		
92107	92107-005	TOOL-DRIVER,#3PHILLIPS		1	1	1		
92107A	92107-1053	TOOL-DRIVER,#2PHILLIPS		1	1	1		
92110	92110-1015	TOOL-WRENCH,ALLEN,5MM		1	1	1		
92110A	92110-1132	TOOL-WRENCH,BOX,16MM		1	1	1		
92110B	92110-1144	TOOL-WRENCH,HOOK		1	1	1		
92110C	92110-1147	TOOL-WRENCH,BOX END,27MM		1	1	1		
92110D	92110-1148	TOOL-WRENCH,BOX END,22MM		1	1	1		
92110E	92110-1152	TOOL-WRENCH,OPEN END,10X12		1	1	1		
92110F	92110-1153	TOOL-WRENCH,OPEN END,14X17		1	1	1		
92110G	92110-3703	TOOL-WRENCH,ALLEN,4MM		1	1	1		
92111	92111-1051	TOOL-BAR,BOX END WRENCH		1	1	1		
92112	92112-1001	TOOL-PLIERS		1	1	1		
92127	92127-003	TOOL-WRENCH,ALLEN,6MM		1	1	1		

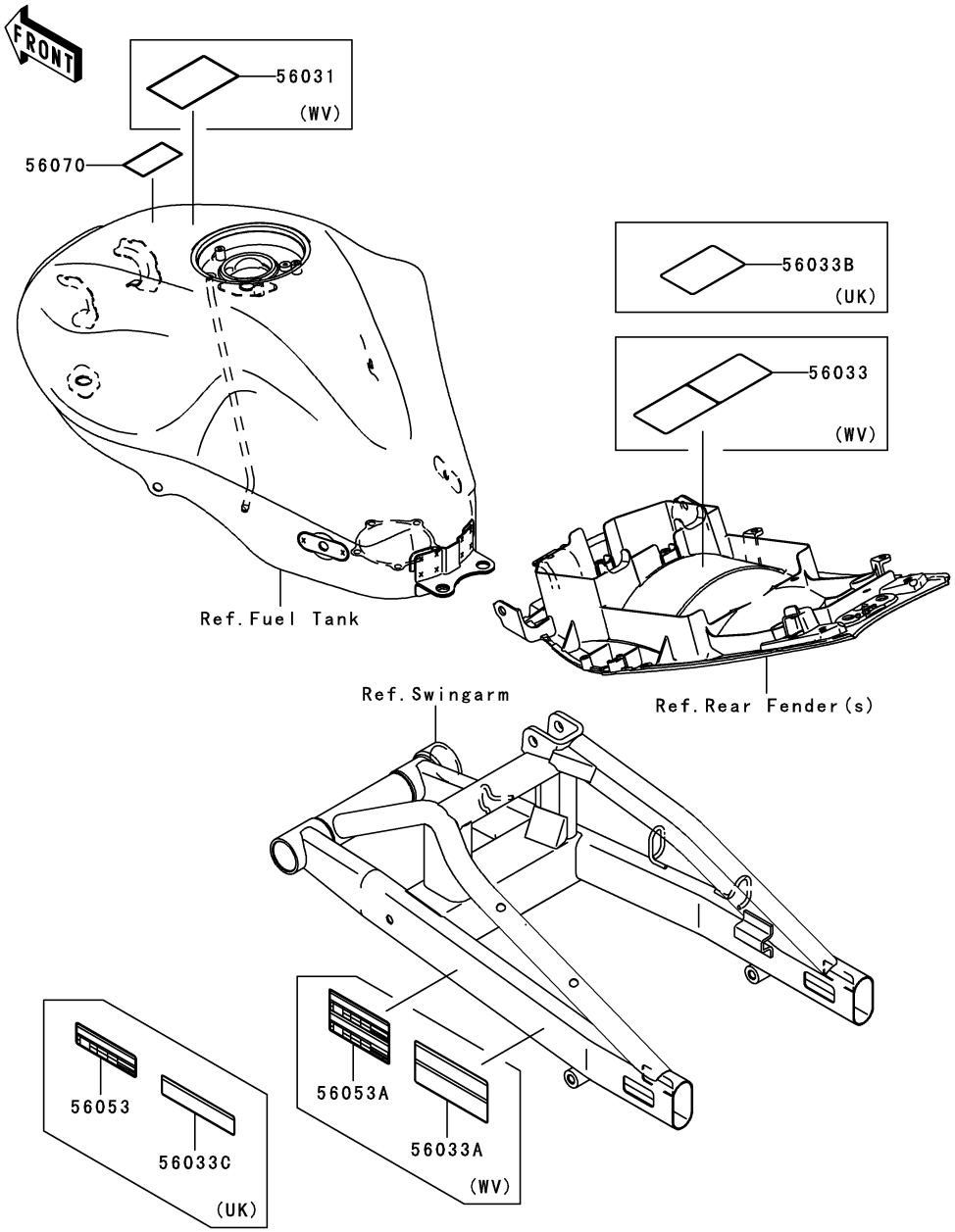

Ref. No.	Part No.	Description	Spec Code	Quantity-ER650 '06 A6S	'07 A7F	'08 A8F		
56031	56031-1441	LABEL-MANUAL,ENGLISH/FRENCH						
	L		WV	1	1	1		
56033	56033-0089	LABEL-MANUAL,DAILY SAFETY						
	L		WV	1	1	1		
56033A	56033-0090	LABEL-MANUAL,CHAIN						
	L		WV	1	1	1		
56033B	56033-0117	LABEL-MANUAL,DAILY SAFETY						
	L		UK	1	1	1		
56033C	56033-0118	LABEL-MANUAL,CHAIN						
	L		UK	1	1	1		
56053	56053-0172	LABEL-SPECIFICATION,TIRE&LOAD						
	L		UK	1	1	1		
56053A	56053-0173	LABEL-SPECIFICATION,TIRE&LOAD						
	L		WV	1	1	1		
56070	56070-1143	LABEL,UNLEADED PETROL ONLY		1	1	1		

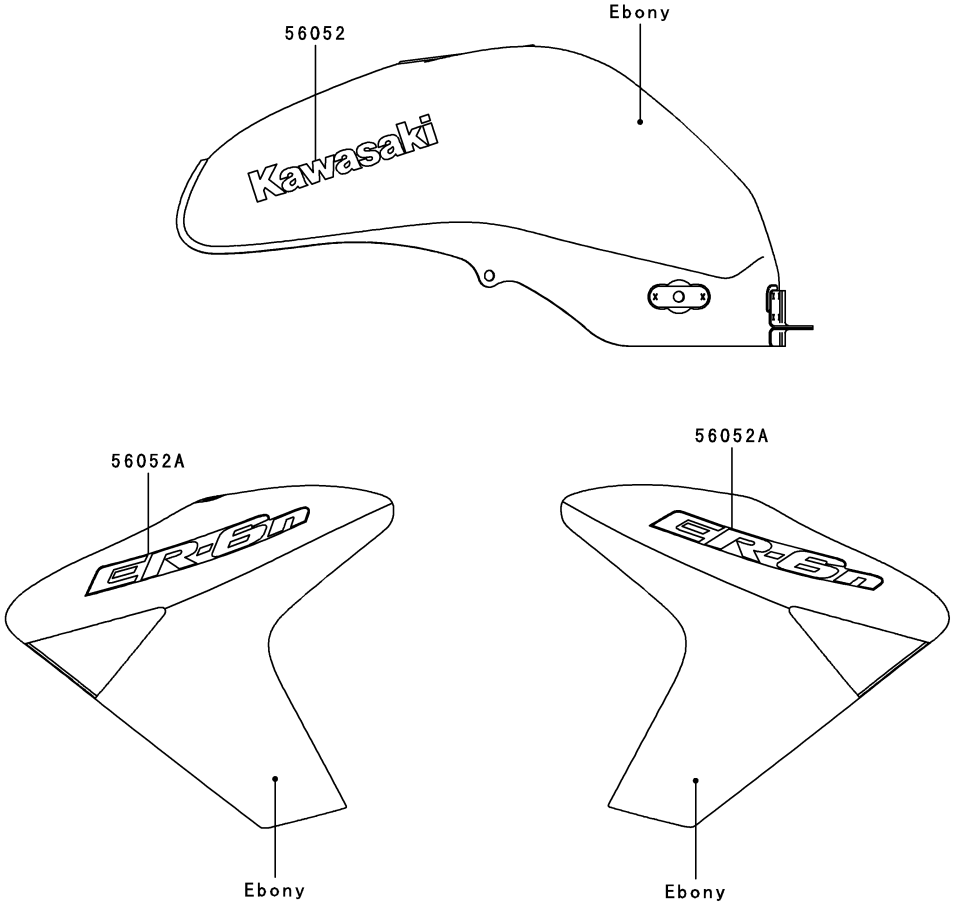

F2861

Ref. No.	Part No.	Description	Spec Code	Quantity-ER650				
				’06	’07	’08		
				A6S	A7F	A8F		
56052	56052-0785	MARK,FUEL TANK,KAWASAKI		2				
56052A	56052-0786	MARK,SHROUD,ER-6N		2				

F2861A

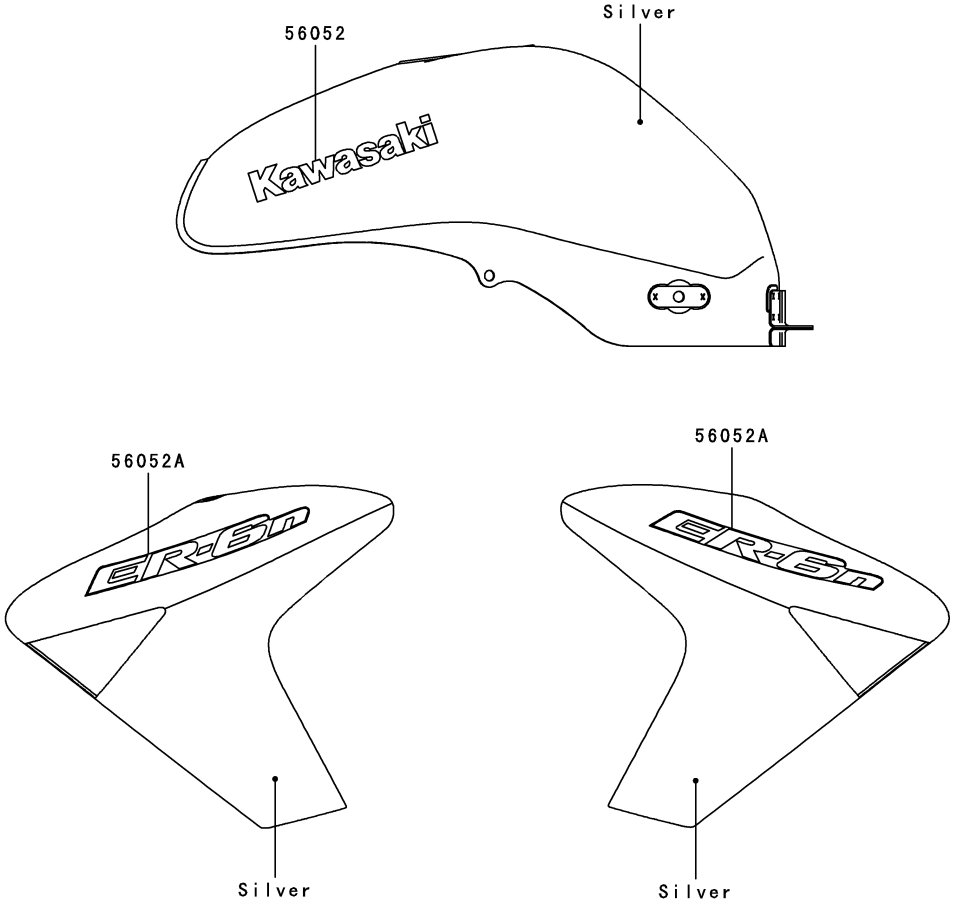

Ref. No.	Part No.	Description	Spec Code	Quantity-ER650				
				’06	’07	’08		
				A6S	A7F	A8F		
56052	56052-0788	MARK,FUEL TANK,KAWASAKI		2				
56052A	56052-0789	MARK,SHROUD,ER-6N		2				

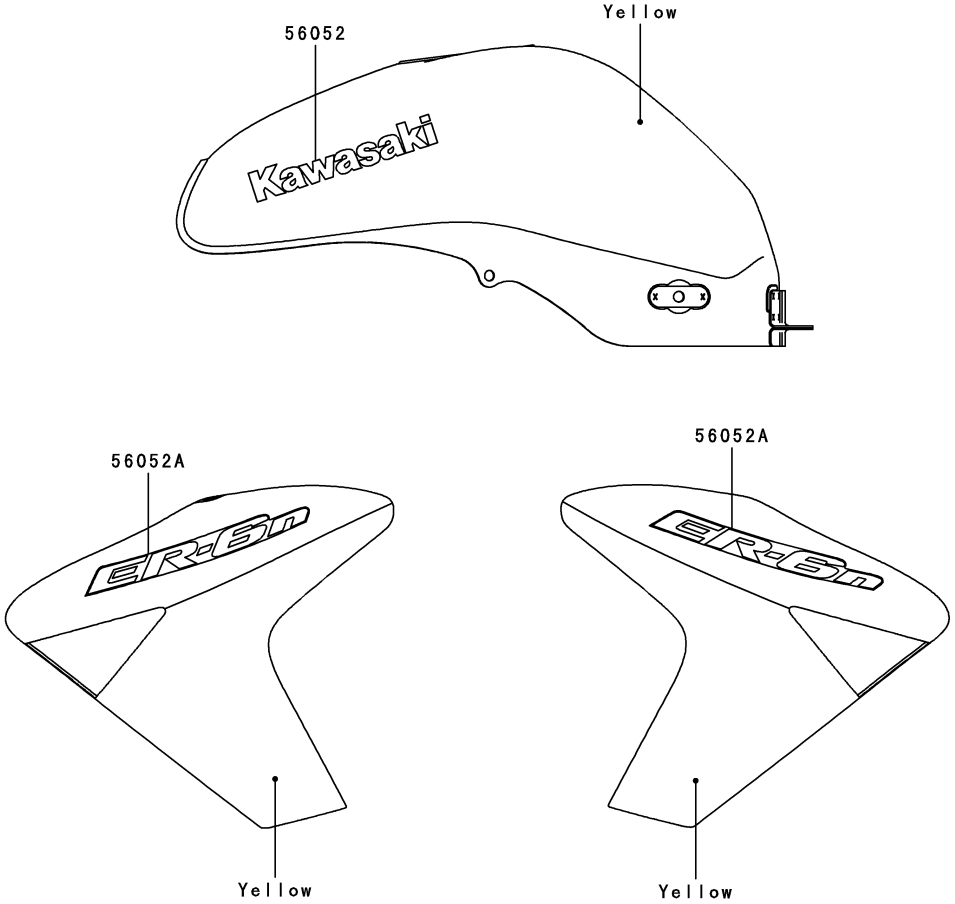

Ref. No.	Part No.	Description	Spec Code	Quantity-ER650				
				’06	’07	’08		
				A6S	A7F	A8F		
56052	56052-0782	MARK,FUEL TANK,KAWASAKI		2				
56052A	56052-0783	MARK,SHROUD,ER-6N		2				

F2861C

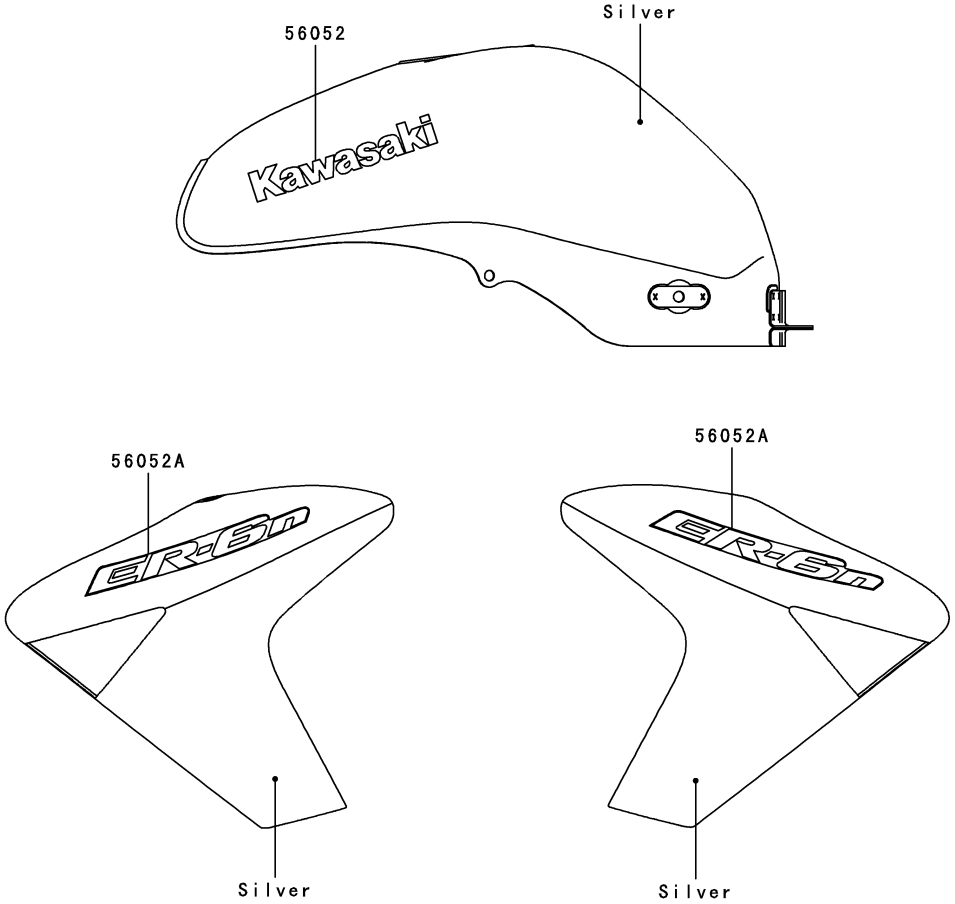

Ref. No.	Part No.	Description	Spec Code	Quantity-ER650				
				’06	’07	’08		
				A6S	A7F	A8F		
56052	56052-0788	MARK,FUEL TANK,KAWASAKI			2			
56052A	56052-0789	MARK,SHROUD,ER-6N			2			

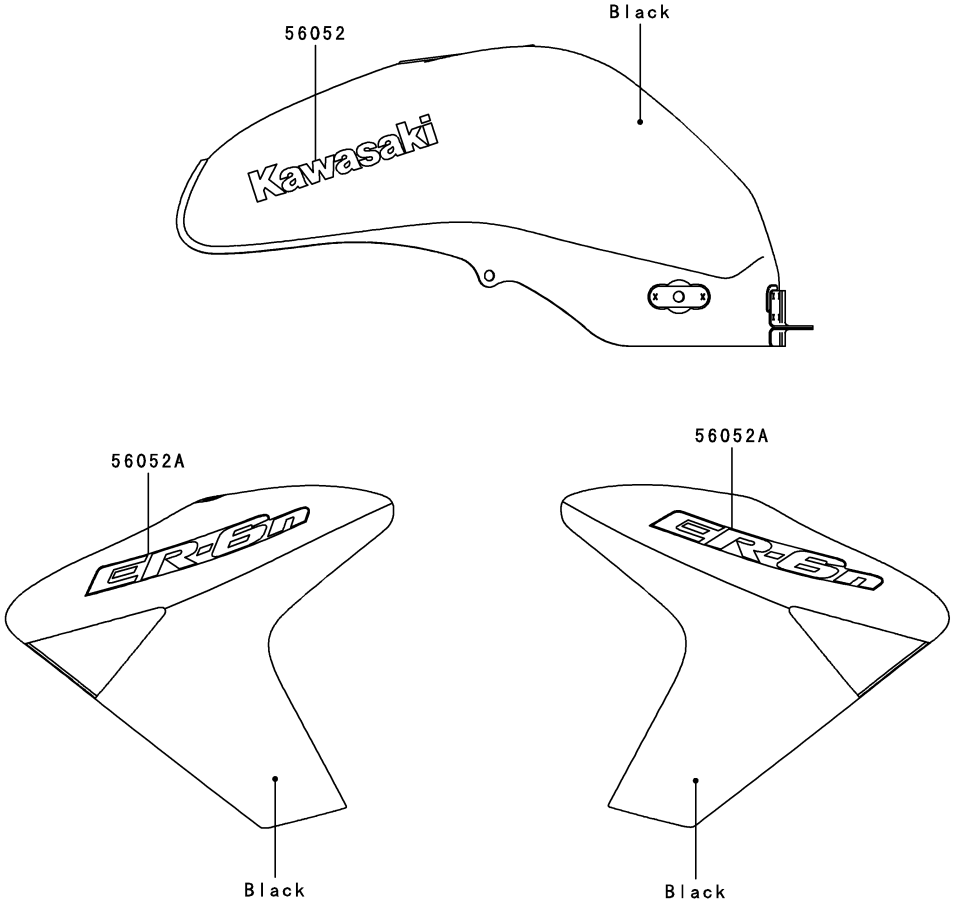

Ref. No.	Part No.	Description	Spec Code	Quantity-ER650				
				’06	’07	’08		
				A6S	A7F	A8F		
56052	56052-0785	MARK,FUEL TANK,KAWASAKI			2			
56052A	56052-0966	MARK,SHROUD,ER-6N			2			

F2861E

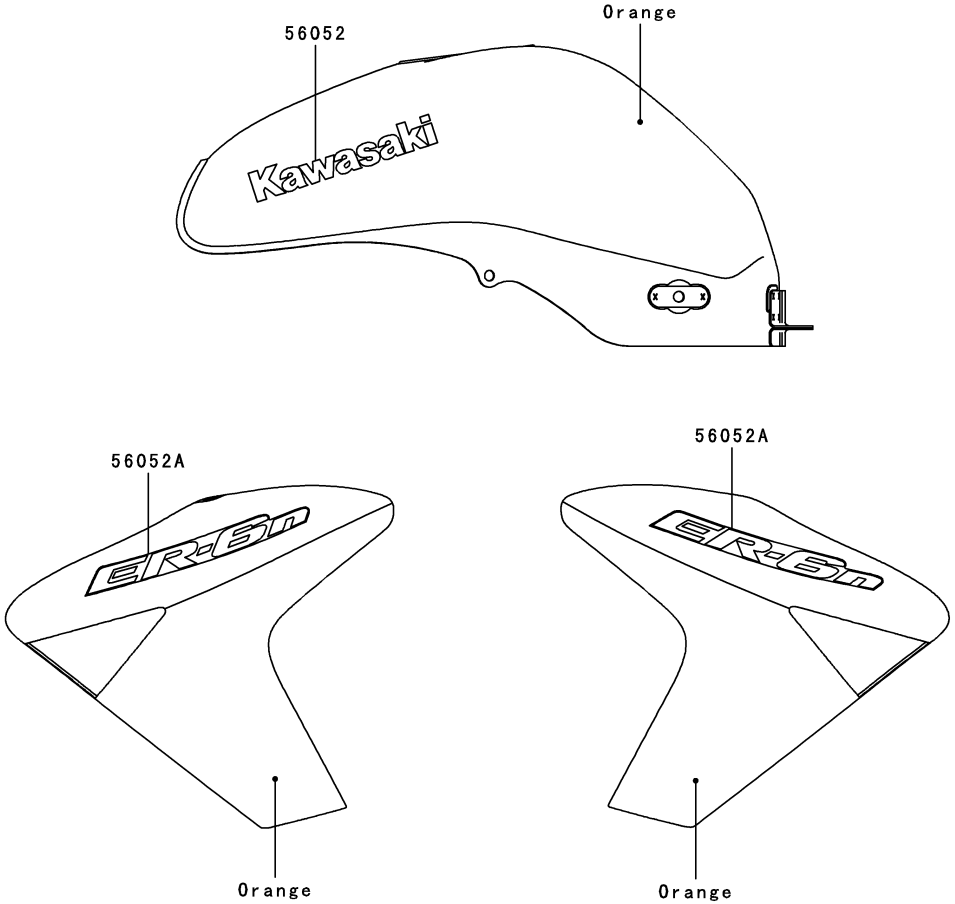

Ref. No.	Part No.	Description	Spec Code	Quantity-ER650				
				’06	’07	’08		
				A6S	A7F	A8F		
56052	56052-0782	MARK,FUEL TANK,KAWASAKI			2			
56052A	56052-0967	MARK,SHROUD,ER-6N			2			

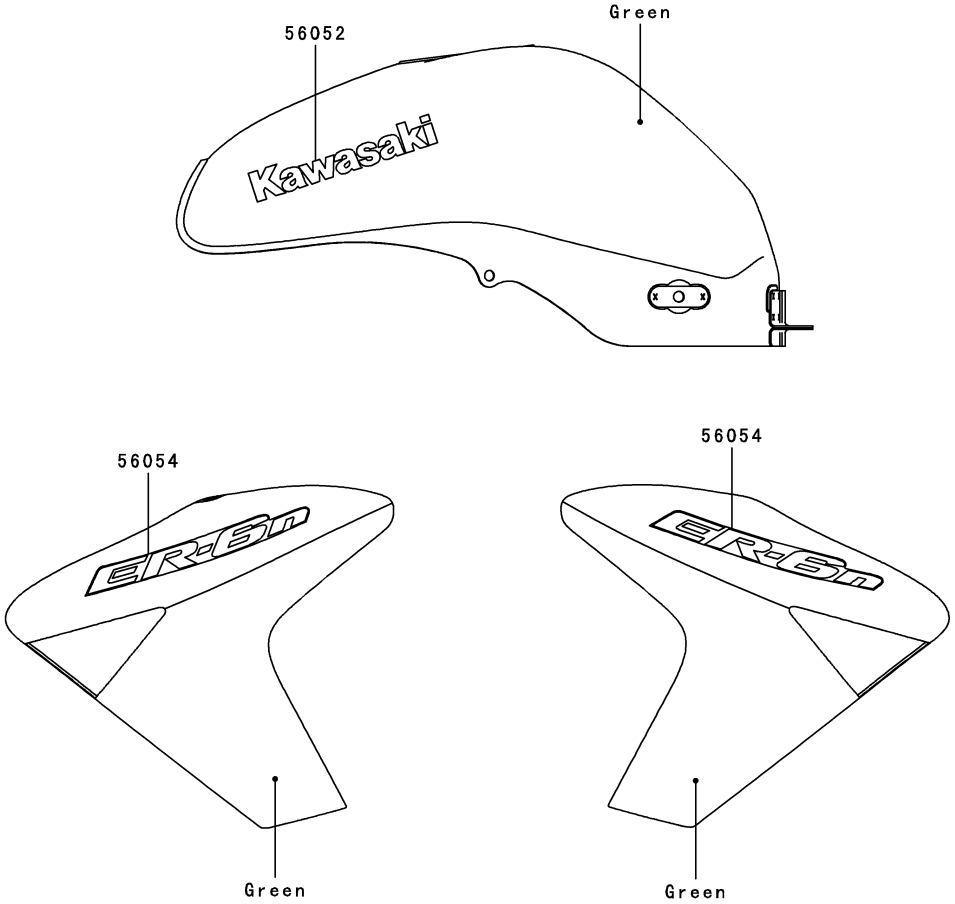

Ref. No.	Part No.	Description	Spec Code	Quantity-ER650				
				’06	’07	’08		
				A6S	A7F	A8F		
56052	56052-0782	MARK,FUEL TANK,KAWASAKI				2		
56054	56054-0105	MARK,SHROUD,ER-6N				2		

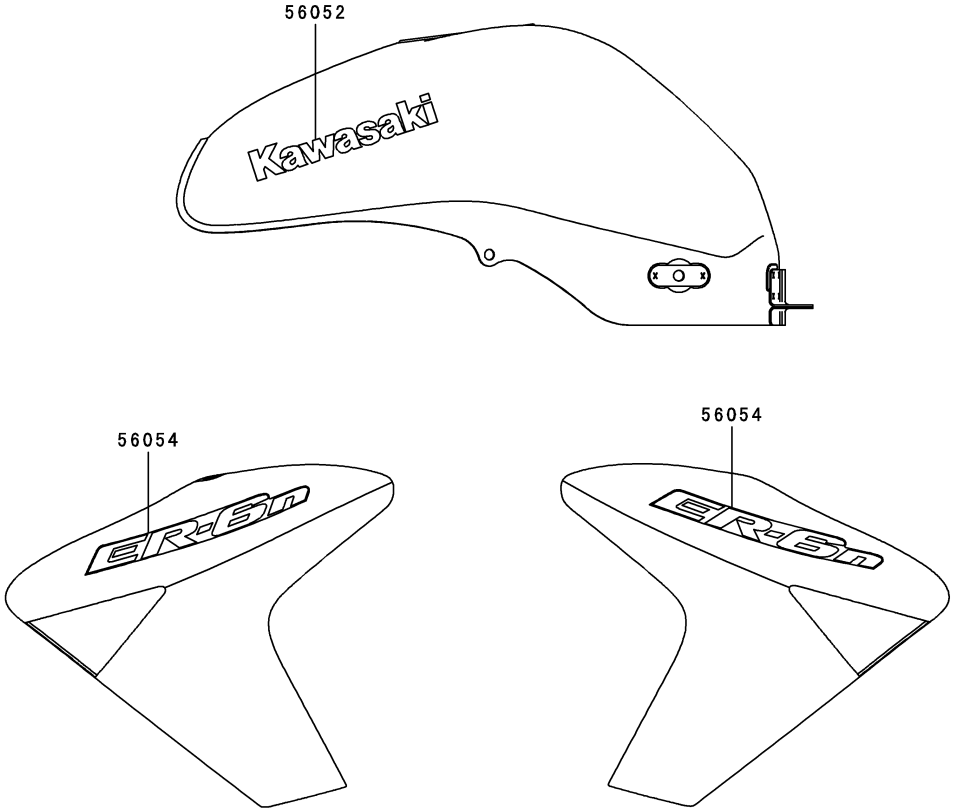

Ref. No.	Part No.	Description	Spec Code	Quantity-ER650				
				’06	’07	’08		
				A6S	A7F	A8F		
56052	56052-0785	MARK,FUEL TANK,KAWASAKI				2		
56054	56054-0106	MARK,SHROUD,ER-6N				2		

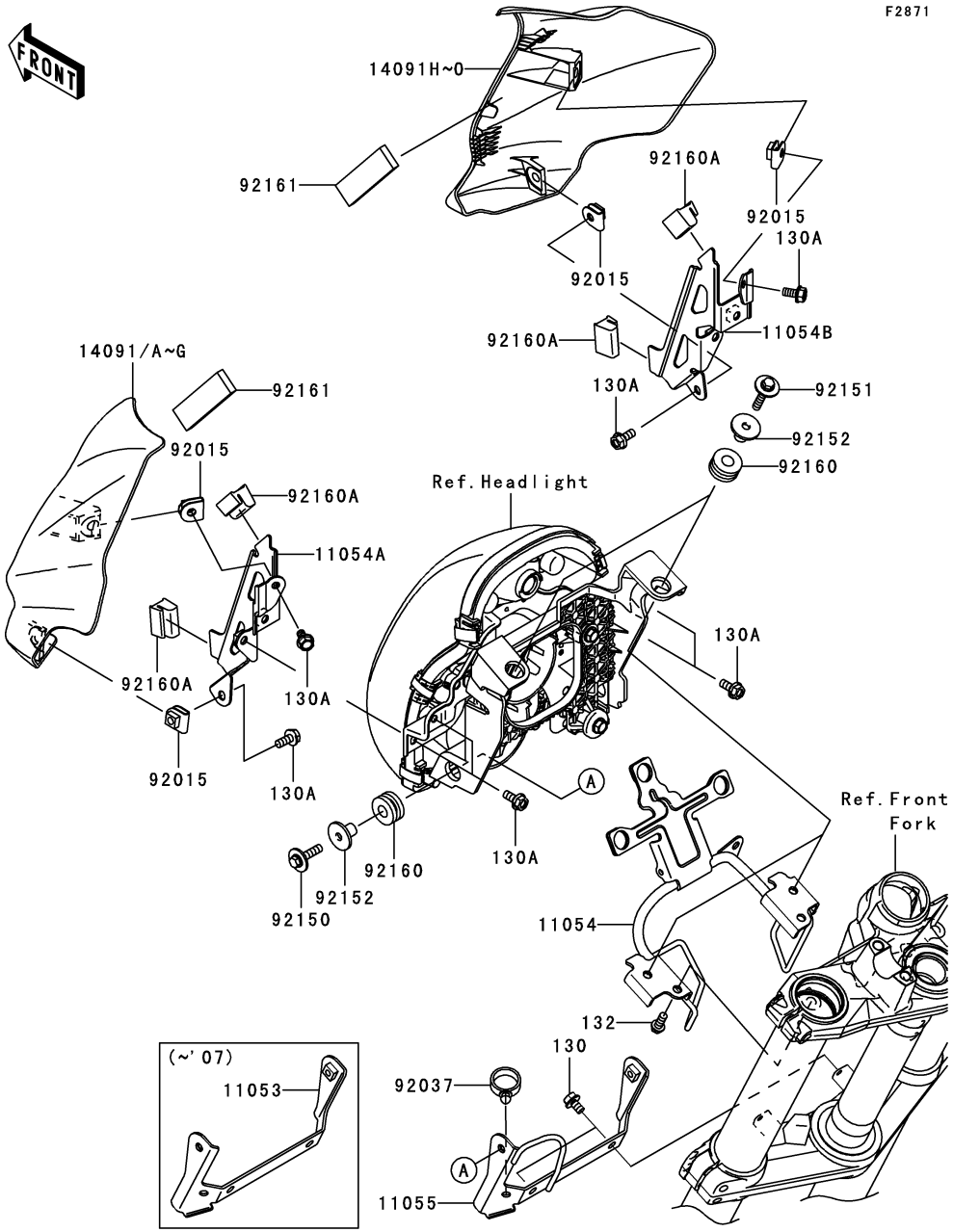

Ref. No.	Part No.	Description	Spec Code	Quantity-ER650 '06 A6S	'07 A7F	'08 A8F		
11053	11053-1811	BRACKET,HEAD LAMP,LWR		1	1			
11054	11054-0220	BRACKET,HEAD LAMP,UPP		1	1	1		
11054A	11054-0251	BRACKET,HEAD LAMP,LH		1	1	1		
11054B	11054-0252	BRACKET,HEAD LAMP,RH		1	1	1		
11055	11055-0178	BRACKET,HEAD LAMP,LWR				1		
14091	14091-0458-H8	COVER,HEAD LAMP,LH,EBONY		1				
14091A	14091-0458-15D	COVER,HEAD LAMP,LH,C.P.BLUE				1		
14091B	14091-0458-15P	COVER,HEAD LAMP,LH,C.L.GREEN				1		
14091C	14091-0458-15Q	COVER,HEAD LAMP,LH,M.D.BLACK				1		
14091D	14091-0458-17H	COVER,HEAD LAMP,LH,P.ORANGE			1			
14091E	14091-0458-17K	COVER,HEAD LAMP,LH,M.BLACK			1			
14091F	14091-0458-474	COVER,HEAD LAMP,LH,G.SILVER		1	1			
14091G	14091-0458-789	COVER,HEAD LAMP,LH,V.YELLOW		1				
14091H	14091-0459-H8	COVER,HEAD LAMP,RH,EBONY		1				
14091I	14091-0459-15D	COVER,HEAD LAMP,RH,C.P.BLUE				1		
14091J	14091-0459-15P	COVER,HEAD LAMP,RH,C.L.GREEN				1		
14091K	14091-0459-15Q	COVER,HEAD LAMP,RH,M.D.BLACK				1		
14091L	14091-0459-17H	COVER,HEAD LAMP,RH,P.ORANGE			1			
14091M	14091-0459-17K	COVER,HEAD LAMP,RH,M.BLACK			1			
14091N	14091-0459-474	COVER,HEAD LAMP,RH,G.SILVER		1	1			
14091O	14091-0459-789	COVER,HEAD LAMP,RH,V.YELLOW		1				
92015	92015-1904	NUT,CLIP,6MM		4	4	4		
92037	92037-1827	CLAMP,HOSE		1	1	1		
92150	92150-1829	BOLT,6X25		2	2	2		
92151	92151-1105	BOLT,FLANGED,6X30		2	2	2		
92152	92152-0048	COLLAR		4	4	4		
92160	92160-1162	DAMPER		4	4	4		
92160A	92160-1197	DAMPER		4	4	4		
92161	92161-0349	DAMPER,HEAD LAMP COVER		2	2	2		
130	130BB0610	BOLT-FLANGED,6X10		2	2	2		
130A	130BB0614	BOLT-FLANGED,6X14		8	8	8		
132	132BA0614	BOLT-FLANGED-SMALL,6X14		2	2	2		

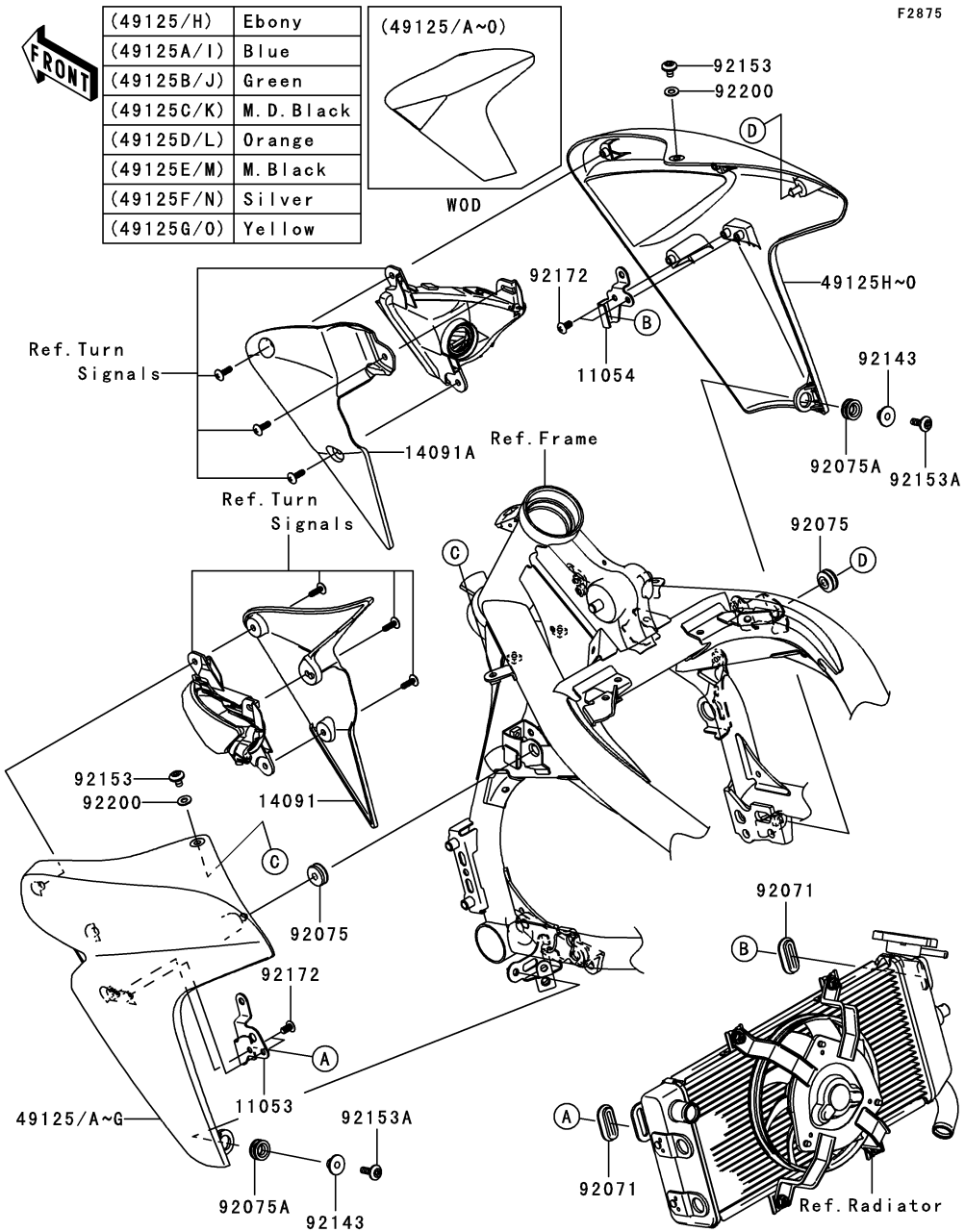

Ref. No.	Part No.	Description	Spec Code	Quantity-ER650 '06 A6S	'07 A7F	'08 A8F		
11053	11053-1814	BRACKET,SHROUD,LH		1	1	1		
11054	11054-0256	BRACKET,SHROUD,RH		1	1	1		
14091	14091-0543	COVER,SHROUD,LH		1	1	1		
14091A	14091-0544	COVER,SHROUD,RH		1	1	1		
49125	49125-0018-H8	SHROUD,LH,EBONY		1				
49125A	49125-0018-15D	SHROUD,LH,C.P.BLUE				1		
49125B	49125-0018-15P	SHROUD,LH,C.L.GREEN				1		
49125C	49125-0018-15Q	SHROUD,LH,M.D.BLACK				1		
49125D	49125-0018-17H	SHROUD,LH,P.ORANGE			1			
49125E	49125-0018-17K	SHROUD,LH,M.BLACK			1			
49125F	49125-0018-474	SHROUD,LH,G.SILVER		1	1			
49125G	49125-0018-789	SHROUD,LH,V.YELLOW		1				
49125H	49125-0019-H8	SHROUD,RH,EBONY		1				
49125I	49125-0019-15D	SHROUD,RH,C.P.BLUE				1		
49125J	49125-0019-15P	SHROUD,RH,C.L.GREEN				1		
49125K	49125-0019-15Q	SHROUD,RH,M.D.BLACK				1		
49125L	49125-0019-17H	SHROUD,RH,P.ORANGE			1			
49125M	49125-0019-17K	SHROUD,RH,M.BLACK			1			
49125N	49125-0019-474	SHROUD,RH,G.SILVER		1	1			
49125O	49125-0019-789	SHROUD,RH,V.YELLOW		1				
92071	92071-0013	GROMMET		2	2	2		
92075	92075-1067	DAMPER		2	2	2		
92075A	92075-1634	DAMPER		2	2	2		
92143	92143-1962	COLLAR		2	2	2		
92153	92153-0411	BOLT,SOCKET,6X10		2	2	2		
92153A	92153-0816	BOLT,6X18		2	2	2		
92172	92172-0006	SCREW,TAPPING,5X14		4	4	4		
92200	92200-1388	WASHER,6.5X14X1		2	2	2		

F2920

Owner’s Manual
(Local Procurement)

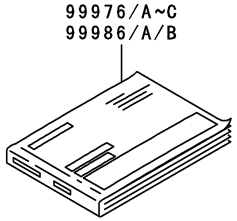

Ref.No.	Language
(99976/A)	English
	French
	German
	Italian
(99976B)	English
	French
	German
(99976C)	Italian
	Spanish
	Dutch
(99986/A/B)	English

Service Manual

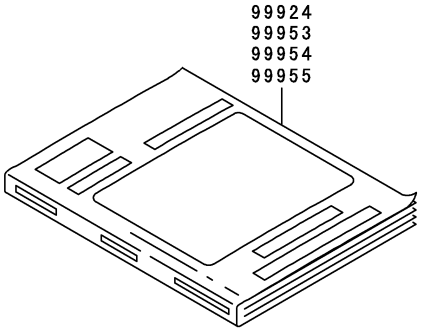

Ref.No.	Language
(99924)	English
(99953)	German
(99954)	French
(99955)	Italian

A&P Manual

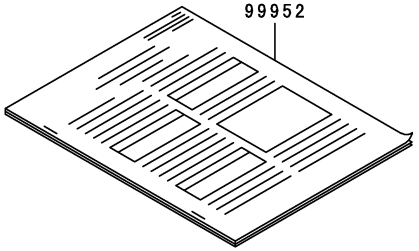

Ref.No.	Language
(99939)	English
(99946)	German
(99950)	French
(99951)	Italian
(99952)	Spanish

Ref. No.	Part No.	Description	Spec Code	Quantity-ER650				
				’06	’07	’08		
				A6S	A7F	A8F		
99924	99924-1360-03	SERVICE MANUAL,ENGLISH		1	1	1		
99939	99939-1317-01	A&P MANUAL,ENGLISH		1	1	1		
99946	99946-1033-01	A&P MANUAL,GERMAN		1	1	1		
99950	99950-1038-01	A&P MANUAL,FRENCH		1	1	1		
99951	99951-1024-01	A&P MANUAL,ITALIAN		1	1	1		
99952	99952-1008-01	A&P MANUAL,SPANISH		1	1	1		
99953	99953-1030-01	SERVICE MANUAL,GERMAN		1	1	1		
99954	99954-1039-01	SERVICE MANUAL,FRENCH		1	1	1		
99955	99955-1022-01	SERVICE MANUAL,ITALIAN		1	1	1		
99976	99976-1249	OWNER’S MANUAL,MULTI		1				
99976A	99976-1319	OWNER’S MANUAL,MULTI			1			
99976B	99976-1401	OWNER’S MANUAL,EN/FR/DE				1		
99976C	99976-1402	OWNER’S MANUAL,IT/ES/NL				1		
99986	99986-1292	OWNER’S MANUAL,ENGLISH		1				
99986A	99986-1375	OWNER’S MANUAL,ENGLISH			1			
99986B	99986-1431	OWNER’S MANUAL,ENGLISH				1		

Part No.	Grid No.
11004-0035	B-3
11004-0064	B-3
11005-0081	B-5
11008-0089	B-3
11009-1145	D-10
11009-1325	F-10
11009-1856	B-7
11010-0108	B-6
11010-0153	B-6
11012-1084	D-10
11012-1717-10M	E-5
11012-1717-10N	E-5
11012-1717-10N	E-6
11012-1717-11J	E-5
11012-1717-11J	E-6
11012-1717-18T	E-6
11012-1717-458	E-6
11029-0008	B-6
11051-1370	G-10
11051-1503	G-7
11053-1739	C-10
11053-1811	H-9
11053-1812	F-12
11053-1814	H-10
11053-1931	E-5
11053-1931	E-6
11054-0133	C-14
11054-0220	H-9
11054-0234	B-7
11054-0235	B-7
11054-0238	B-4
11054-0248	E-5
11054-0248	E-6
11054-0251	H-9
11054-0252	H-9
11054-0253	E-11
11054-0256	H-10
11054-0347	E-5
11054-0347	E-6
11054-0523	E-5
11054-0523	E-6
11054-0869	B-4
11054-1283	E-6
11054-1284	E-6
11055-0178	H-9
11061-0029	F-6
11061-0105	B-4
11061-0107	D-8
11061-0164	C-10
11061-0165	C-10
11061-0166	C-10
11061-0167	C-11
11061-0170	B-4
11061-0171	B-5
11061-0182	C-4
11061-0278	B-7
11065-0018	C-12
11065-0111	B-4
11065-0120	B-6
11065-0121-11E	E-7
11065-0121-18R	E-7
11065-0121-458	E-7
11065-0121-793	E-7
11065-0121-796	E-7
11065-0125-10M	E-5
11065-0125-10N	E-5
11065-0125-10N	E-6
11065-0125-11J	E-5
11065-0125-11J	E-6
11065-0125-18T	E-6
11065-0125-458	E-6
11065-0135	G-6
11065-0150	C-10
112C0640	F-9
12004-0015	B-8
12005-0035	B-8
12009-1091	B-8
12011-1053	B-8
12021-1130	B-4
12032-0009	B-8
12046-0040	D-3
12046-0041	B-9
12048-0027	B-9
12053-0051	B-9
12053-0059	B-9
12053-0071	D-3
12053-0075	B-9
120CA0818	D-4
120CB0510	D-6
120CB0510	D-7
120CB0512	G-10
120CB0620	F-9
120CD0630	B-3
120CD0630	B-5
13001-0060	B-5
13002-0007	B-5
13008-1196	B-5
13031-0071	B-10
13042-1006	F-9
13070-0045	F-8
13087-042	B-12
13088-1105	B-12
13089-0016	B-12
13089-0017	B-12
13091-1624	F-9
13091-1652	F-9
13095-0059	B-12
130BA0512	D-5
130BA0610	G-9
130BA0620	C-10
130BA0830	D-9
130BB0525	C-14
130BB0610	E-6
130BB0610	H-9
130BB0612	G-10
130BB0614	H-9
130BB0618	E-11
130BB0620	D-4
130BB0625	F-12
130BB0625	G-7
130CB0825	G-5
130CD0835	B-7
130L0610	E-5
130W0822	G-5
13102-0021	B-12
13107-0156	D-3
13107-1106	D-6
13107-1106	D-7
13116-0018	B-12
13127-0028	B-13
13128-0020	B-13
13140-0025	B-14
13140-0026	B-14
13141-0018	B-14
13144-0024	B-13
13145-0020	B-14
13151-1080	C-10
13156-0072	C-3
13159-1056	F-7
13187-1006	B-12
13194-1083	D-6
13194-1083	D-7
13227-0011	D-8
13227-0012	D-8
13234-0024	B-11
13236-0094	C-3
13236-1337	F-5
13251-0010-JJ	B-10
13251-0010-KK	B-10
13262-0245	B-13
13262-0246	B-13
13262-0247	B-13
13262-0251	B-13
13262-0252	B-13
13262-0253	B-13
13262-0335	B-13
13262-0337	B-13
13262-0338	B-13
13262-0346	B-13
13271-0574	D-4
13271-0575	C-4
13271-0575	C-6
13271-0577	C-4
13271-0577	C-6
13271-0584	C-4
13271-0584	C-6
13271-0626	B-14
13271-1187	C-4
13271-1187	C-6
13280-0134	C-11
13280-0137	B-14
13280-0171	C-4
13280-0171	C-6
13280-0178	B-14
13280-0248	F-9
13280-1263	D-6
13280-1263	D-7
132BA0614	H-9
132BA0618	B-4
132BB0610	E-6
132BB0612	B-4
132BB0622	E-6
132BB0630	C-10
132BB0812	G-9
132BB0822	E-4
132L0610	E-5
13320-0010	C-3
14001-0080	C-4
14001-0104	C-6
14013-1004	C-4
14013-1004	C-6
14014-0018	B-14
14014-0019	B-13
14014-0020	B-13
14025-1725	G-7
14026-0021	C-10
14031-0058	C-10
14032-0084	C-10
14043-0008	C-11
14055-0018	C-4
14055-0018	C-6
14073-0110	B-6
14079-0017	B-6
14091-0445	C-10
14091-0458-15D	H-9
14091-0458-15P	H-9
14091-0458-15Q	H-9
14091-0458-17H	H-9
14091-0458-17K	H-9
14091-0458-474	H-9
14091-0458-789	H-9
14091-0458-H8	H-9
14091-0459-15D	H-9
14091-0459-15P	H-9
14091-0459-15Q	H-9
14091-0459-17H	H-9
14091-0459-17K	H-9
14091-0459-474	H-9
14091-0459-789	H-9
14091-0459-H8	H-9
14091-0461-6Z	E-9
14091-0461-837	E-9
14091-0465-15D	F-14
14091-0465-15P	F-14
14091-0465-15Q	F-14
14091-0465-17H	F-14
14091-0465-17K	F-14
14091-0465-474	F-14
14091-0465-789	F-14
14091-0465-H8	F-14
14091-0466	F-14
14091-0488	E-11
14091-0543	H-10
14091-0544	H-10
14091-0550	B-4
14091-0600	F-14
14091-0715	E-11
14091-0789-6Z	E-9
14091-0789-837	E-9
16007-1228	B-8
16014-0002	C-12
16065-0024	B-3
16073-3707	C-12
16085-0074	D-6
16085-0074	D-7
16085-0076	D-6
16085-0076	D-7
16097-0004	D-3
16115-1053	C-10
16126-0019	B-6
16126-1140	E-13
16130-1058	D-3
16142-0024	D-3
16142-0025	D-8
16142-0047	D-8
16154-0037	D-3
16154-1115	D-3
16160-0083	D-3
16160-0084	D-10
16160-0110	D-3
16163-0099	C-12
16165-0001	C-4
16165-0001	C-6
18091-0284	B-7
18091-0495	B-7
180AA0616	F-4
18140-0002	B-7
21003-0041	D-4
21007-0053	D-5
21007-0075	D-4
21007-5057	G-10
21025-011	D-6
21039-0004	D-7
21039-1060	D-6
21040-0003	D-7
21040-1055	D-6
21066-1127	D-4
21163-0027	D-6
21163-0040	D-7
21171-1286	D-5
21175-0077	C-14
21176-0009	C-14
21176-0026	C-14
21176-0035	C-14
21176-0048	C-14
21176-0058	C-14
21176-0065	C-10
220AB0525	F-9
220AB0540	F-9
224AB0408	G-8
23007-0051	G-6
23007-0063	G-8
23007-0064	G-8
23008-0042	G-7
23008-0044	G-8
23008-0051	G-6
23016-0003	G-7
23017-1067	G-6
23025-0018	G-7
23026-1064	G-7

Part No.	Grid No.
23035-1066	G-7
23037-0077	G-8
23037-0078	G-8
23040-0059	G-8
23040-0060	G-8
25023-0014	F-14
25031-0111	F-14
26006-0001	G-9
26006-1006	D-6
26006-1006	D-7
26006-1078	G-9
26011-0073	G-9
26011-0082	G-9
26011-0083	D-6
26011-0083	D-7
26011-0096	G-9
26011-0099	G-9
26012-0094	G-9
26031-0400	G-9
27002-0007	G-9
27002-0010	G-9
27003-0051	G-9
27005-5130	G-10
27005-5139	G-10
27008-0030	G-10
27010-0025	F-5
27010-1094	F-9
27010-1313	C-4
27010-1313	C-6
27010-1446	D-6
27010-1446	D-7
27010-1455	G-10
27010-1479	G-10
27012-1316	E-11
27016-1115	G-10
27016-5309	G-10
27045-5231	G-10
27045-5356	G-10
28011-0033	F-14
28012-1077	G-10
290Q0606	C-4
290Q0606	C-6
318C0800	E-7
32033-1535	D-3
32065-0022	E-10
32065-0023	E-10
32085-0047	E-9
32154-0661	C-4
32154-0661	C-6
32160-0131-11E	E-3
32160-0131-793	E-3
32160-0131-796	E-3
32160-0268-18R	E-3
32160-0268-458	E-3
32190-0189	E-4
32190-0234	E-4
33001-0081-11E	E-7
33001-0081-18R	E-7
33001-0081-458	E-7
33001-0081-793	E-7
33001-0081-796	E-7
33032-1142	E-7
33040-0015	E-7
34024-0024	E-12
34028-0004	E-9
34028-0005	E-9
34028-0059	E-9
34028-0060	E-9
35004-0053-15D	E-10
35004-0053-15P	E-10
35004-0053-15Q	E-10
35004-0053-17H	E-10
35004-0053-17K	E-10
35004-0053-474	E-10
35004-0053-789	E-10
35004-0053-H8	E-10
35015-0005	E-11
35019-0042	E-11
35023-0076	E-11
35023-0077	E-11
35063-0285-18R	E-9
35063-0285-458	E-9
35063-0285-735	E-9
35063-0286-18R	E-9
35063-0286-458	E-9
35063-0286-735	E-9
36001-0063-6Z	G-4
36001-0064-6Z	G-4
36014-0027	G-4
36040-0037-15D	G-5
36040-0037-15P	G-5
36040-0037-15Q	G-5
36040-0037-17H	G-5
36040-0037-17K	G-5
36040-0037-474	G-5
36040-0037-789	G-5
36040-0037-H8	G-5
36040-0038-15D	G-5
36040-0038-15P	G-5
36040-0038-15Q	G-5
36040-0038-17H	G-5
36040-0038-17K	G-5
36040-0038-474	G-5
36040-0038-789	G-5
36040-0038-H8	G-5
36040-0039-15D	G-5
36040-0039-15P	G-5
36040-0039-15Q	G-5
36040-0039-17H	G-5
36040-0039-17K	G-5
36040-0039-474	G-5
36040-0039-789	G-5
36040-0039-H8	G-5
39061-0066	D-9
39061-0110	D-9
39061-5001	D-9
39062-0094	D-10
39062-0096	D-10
39062-0135	D-10
39076-0006	D-6
39076-0006	D-7
39178-0058	B-7
39178-0073	B-7
39193-0029	C-4
39193-0029	C-6
39193-0030	C-4
39193-0031	C-4
39193-0031	C-6
39193-0032	C-4
39193-0032	C-6
39193-0033	C-4
39193-0033	C-6
39193-0046	C-6
41009-0109	E-13
41009-0110	E-13
41068-0053	F-3
41068-0059	E-14
41073-0051-795	F-3
41073-0051-R2	F-3
41073-0053-795	E-14
41073-0053-R2	E-14
41075-0007	E-13
41075-0008	E-13
41075-0009	E-13
41080-0040	F-8
41080-0103-10R	F-6
41080-0103-11I	F-6
410F0600	F-9
410F0800	E-7
411AA1200	E-8
42033-0003	F-3
42033-0028	F-3
42034-1143	D-4
42036-0024	E-8
42036-1251	F-3
42036-1358	E-7
42041-0020	F-3
42045-018	F-3
43001-0051	F-4
43010-1074	F-7
43015-0011	F-5
43015-0068	F-7
43020-1054	F-5
43020-1094	F-7
43020-1119	F-8
43022-1010	F-5
43026-1051	F-7
43026-1076	F-5
43027-1051	F-7
43027-1055	F-5
43028-1057	F-7
43028-1058	F-5
43034-0004	F-8
43034-1053	F-5
43044-1110	F-8
43044-1115	F-6
43044-1116	F-6
43048-1073	F-6
43049-1068	F-6
43049-1092	F-6
43049-1097	F-8
43056-1054	F-6
43056-1054	F-8
43057-003	F-6
43057-003	F-8
43078-0025	D-10
43078-1082	F-7
43080-5017-DJ	F-6
43080-5028-DJ	F-6
43080-5061-DJ	F-8
43082-0050	F-6
43082-0051	F-6
43082-1213	F-8
43084-003	F-6
43084-003	F-8
43094-1053	F-9
43095-0193	F-7
43095-0211	F-5
43095-0236	F-5
43095-0238	F-7
44005-0045-11E	F-10
44005-0045-18R	F-10
44005-0045-458	F-10
44005-0045-793	F-10
44005-0045-796	F-10
44006-0045-11E	F-10
44006-0045-18R	F-10
44006-0045-458	F-10
44006-0045-793	F-10
44006-0045-796	F-10
44013-0055	F-10
44023-0040	F-10
44026-0084	F-10
44029-0005	F-10
44037-0050-11E	F-10
44037-0050-18R	F-10
44037-0050-458	F-10
44037-0050-793	F-10
44037-0050-796	F-10
44039-0033-11E	F-10
44039-0033-18R	F-10
44039-0033-458	F-10
44039-0033-793	F-10
44039-0033-796	F-10
44041-040	F-10
44065-0014	F-10
44065-1115	F-10
44071-0258-11E	F-10
44071-0258-18R	F-10
44071-0258-458	F-10
44071-0258-793	F-10
44071-0258-796	F-10
44071-0259-11E	F-10
44071-0259-18R	F-10
44071-0259-458	F-10
44071-0259-793	F-10
44071-0259-796	F-10
45014-0140-458	E-8
45014-0140-794	E-8
45014-0140-796	E-8
46003-0093-10	F-9
46003-0093-458	F-9
46003-0093-718	F-9
46012-0010-11E	F-9
46012-0010-793	F-9
46012-0010-796	F-9
46012-0047-18R	F-9
46012-0047-458	F-9
46019-0001	F-9
46075-0033	E-5
46075-0034	E-5
46075-0057	E-6
46075-0058	E-6
46075-1144	F-9
46076-0045	F-9
46076-1180	F-9
46091-0082	F-9
46091-0086	F-9
46091-0118	F-9
46091-1891	F-9
46092-1162	F-9
461K0500	D-6
461K0500	D-7
461L0600	G-10
480J1300	C-3
480J2900	B-13
482L0100	E-9
482L5000	E-9
49002-1116	B-3
49006-1054	F-6
49006-1054	F-8
49006-1095	F-6
49006-1095	F-8
49006-1212	F-8
49016-0017	G-6
49016-0030	D-9
49016-1044	F-5
49033-0011	C-12
49034-0014	C-11
49040-0026	C-13
49047-0019	B-14
49047-0020	B-14
49054-0001	D-10
49063-1055	D-8
49065-0011	D-3
49078-0038	B-8
49085-1078	D-9
49091-0001	F-5
49091-0001	F-7
49107-0074-837	B-7
49118-0042	B-9
49118-0072	B-9
49125-0018-15D	H-10
49125-0018-15P	H-10
49125-0018-15Q	H-10
49125-0018-17H	H-10
49125-0018-17K	H-10
49125-0018-474	H-10
49125-0018-789	H-10
49125-0018-H8	H-10

Part No.	Grid No.
49125-0019-15D	H-10
49125-0019-15P	H-10
49125-0019-15Q	H-10
49125-0019-17H	H-10
49125-0019-17K	H-10
49125-0019-474	H-10
49125-0019-789	H-10
49125-0019-H8	H-10
51044-0029	C-13
51049-0012	F-12
51084-5138-17K	F-12
51084-5138-H8	F-12
51084-5139-474	F-12
51084-5140-17H	F-12
51084-5140-789	F-12
51085-5363-15P	F-12
51085-5365-15D	F-12
51085-5365-15Q	F-12
52005-1057	C-10
53003-0058-MA	F-13
53044-1174	E-6
53044-1185	D-9
53044-1249	F-12
53066-0136-MA	F-13
54010-0029	G-3
54011-0046	G-3
54011-0083	G-3
54012-0164	G-3
54012-0177	G-3
54012-0225	G-3
54012-0226	G-3
55020-0192	E-7
55020-0220	E-11
55020-0343	D-9
55020-1691	F-10
550D2015	F-7
550D4035	F-3
551A0408	D-8
551A0814	C-5
551A0814	C-6
554A1200	D-9
555A0408	B-10
56001-0051	F-9
56001-0052	F-9
56001-0121	F-9
56001-0122	F-9
56007-0026	G-11
56008-1075	G-11
56019-120	G-11
56030-0046	G-9
56030-0098	G-9
56031-1441	G-12
56033-0089	G-12
56033-0090	G-12
56033-0117	G-12
56033-0118	G-12
56033-0131	C-10
56052-0782	H-3
56052-0782	H-6
56052-0782	H-7
56052-0783	H-3
56052-0785	G-13
56052-0785	H-5
56052-0785	H-8
56052-0786	G-13
56052-0788	G-14
56052-0788	H-4
56052-0789	G-14
56052-0789	H-4
56052-0966	H-5
56052-0967	H-6
56053-0172	G-12
56053-0173	G-12
56054-0105	H-7
56054-0106	H-8
56070-1143	G-12
59026-0018	D-5
59256-0007	D-8
59502-0019	D-9
600A0500	B-13
600A0800	E-9
601B6004UU	E-14
601B6204UU	F-3
601B6205UU	F-3
610A0408	B-14
610A0408	C-10
670B2020	C-10
670D1505	C-5
670D1505	C-7
670D1508	C-5
670D1508	C-7
670D1509	C-5
670D1509	C-7
670D1510	C-5
670D1510	C-7
670D2014	C-5
670D2014	C-7
670E5065	C-13
671B2540	C-10
671B2560	F-3
702A06750	F-12
92001-1066	B-12
92001-1950	D-10
92002-1143	B-3
92002-1154	D-8
92002-1322	F-5
92002-1323	F-5
92002-1344	D-3
92002-1582	G-10
92002-1778	C-3
92002-1796	B-14
92002-1796	D-3
92002-1935	E-12
92002-1995	E-9
92003-208	B-9
92004-0024	C-4
92004-0024	C-6
92004-0025	B-3
92004-0028	F-3
92004-1275	F-3
92005-1238	C-4
92005-1238	C-6
92009-1134	F-9
92009-1197	F-14
92009-1360	C-10
92009-1375	B-13
92009-1375	B-14
92009-1378	G-7
92009-1458	F-5
92009-1592	F-14
92009-1593	F-14
92009-1909	G-4
92009-1984	B-6
92009-1984	C-14
92009-3845	E-11
92009-3845	G-10
92015-1188	E-12
92015-1188	E-4
92015-1197	F-9
92015-1233	F-5
92015-1311	B-10
92015-1476	D-6
92015-1476	D-7
92015-1487	D-9
92015-1555	B-12
92015-1602	F-7
92015-1724	E-7
92015-1757	E-11
92015-1757	G-4
92015-1759	E-7
92015-1904	H-9
92015-1959	E-7
92022-077	D-8
92022-1132	D-6
92022-1298	F-11
92022-1342	G-10
92022-1401	B-5
92022-1405	F-14
92022-1496	C-3
92022-1601	F-7
92022-1827	C-3
92022-1827	D-3
92022-1868	B-12
92022-228	F-4
92022-326	F-4
92025-1455	B-13
92026-022	B-12
92026-087	D-6
92026-087	D-7
92026-1217	C-3
92026-1529	B-13
92027-1450	E-6
92027-1653	B-7
92027-1847	G-7
92027-251	F-12
92028-1449	B-13
92028-1903	B-10
92028-1904	B-10
92028-1905	B-10
92033-015	B-13
92033-1036	F-11
92033-1037	B-13
92033-1041	E-7
92033-1043	F-3
92033-1102	F-9
92033-1186	F-7
92033-1247	B-3
92036-008	B-5
92037-010	F-12
92037-1163	G-9
92037-1316	G-9
92037-147	B-6
92037-1505	D-10
92037-1827	G-9
92037-1827	H-9
92039-0068	C-12
92039-1227	G-5
92039-1283	E-11
92039-1283	G-5
92042-007	B-3
92042-014	D-3
92043-0028	E-9
92043-0104	F-7
92043-1037	C-4
92043-1037	C-6
92043-1263	C-10
92043-1489	F-6
92043-1489	F-8
92043-1567	B-3
92043-1567	B-5
92043-1595	E-9
92043-4009	B-4
92045-0017	E-7
92045-0042	B-13
92045-1122	B-14
92045-1224	B-13
92045-1235	B-12
92045-1384	E-3
92046-0008	E-7
92046-0017	C-4
92046-0017	C-6
92046-1010	C-10
92046-1148	C-10
92046-1148	C-4
92046-1148	C-6
92046-1185	B-13
92046-1272	E-8
92049-0022	E-3
92049-0073	F-11
92049-1056	F-3
92049-1057	E-14
92049-1181	E-7
92049-1185	E-7
92049-1259	D-8
92049-1287	F-3
92049-1349	B-8
92049-1475	C-10
92049-1483	E-3
92049-1493	E-8
92049-1501	C-4
92049-1501	C-6
92049-1519	C-10
92055-0006	C-4
92055-0006	C-6
92055-0016	C-14
92055-0082	D-8
92055-0083	D-8
92055-086	B-9
92055-1011	C-10
92055-1155	D-8
92055-1251	F-7
92055-1276	D-6
92055-1276	D-7
92055-1279	D-10
92055-1293	B-13
92055-1321	F-11
92055-1352	B-4
92055-1354	D-3
92055-1370	D-6
92055-1370	D-7
92055-1381	D-6
92055-1381	D-7
92055-1600	B-3
92055-1622	C-12
92057-0098	D-3
92057-0100	B-9
92057-0101	F-3
92058-0007	F-3
92059-1961	E-12
92062-1086	C-4
92062-1086	C-6
92065-058	C-10
92065-097	C-11
92066-0002	B-3
92066-0003	C-4
92066-0003	C-6
92066-0032	F-11
92066-0056	C-4
92066-0056	C-6
92066-0061	C-4
92066-0061	C-6
92066-0069	C-11
92066-0071	E-3
92066-0073	C-10
92066-1211	B-6
92069-1016	G-6
92069-1055	G-7
92069-1084	G-7
92069-1125	G-8
92069-1126	G-6
92070-0014	D-5
92071-0013	H-10
92071-0024	D-6
92071-0024	D-7
92071-1115	D-9
92072-0012	C-12
92072-1085	E-5
92072-1085	E-6
92072-1176	E-5
92072-1176	E-6

Part No.	Grid No.
92072-1197	G-9
92072-1203	E-5
92072-1203	E-6
92072-1414	G-9
92075-1002	F-12
92075-1067	E-9
92075-1067	H-10
92075-125	F-12
92075-1634	H-10
92075-1690	F-12
92075-1912	C-14
92075-209	E-6
92081-1033	B-12
92081-1833	F-4
92086-1075	E-5
92086-1075	E-6
92092-1018	F-9
92093-0045	B-6
92093-0046	B-6
92093-0048	B-6
92093-1472	F-11
92104-0004	G-11
92104-1064	G-11
92106-1001	G-11
92107-005	G-11
92107-1053	G-11
92110-1015	G-11
92110-1132	G-11
92110-1144	G-11
92110-1147	G-11
92110-1148	G-11
92110-1152	G-11
92110-1153	G-11
92110-3703	G-11
92111-1051	G-11
92112-1001	G-11
92127-003	G-11
92139-0106	B-12
92139-0107	B-13
92139-0108	B-13
92139-0114	B-10
92139-0115	B-10
92139-0116	B-10
92139-0117	B-11
92139-0118	B-11
92139-0119	B-11
92139-0120	B-13
92143-1087	B-7
92143-1196	B-7
92143-1379	F-9
92143-1498	C-3
92143-1727	E-7
92143-1962	H-10
92144-1467	F-9
92144-1567	E-9
92144-1568	E-9
92144-1719	F-8
92144-1818	E-12
92144-1831	F-6
92144-1832	F-6
92144-1844	F-6
92144-1975	C-3
92145-0066	B-12
92145-0091	G-10
92145-0304	C-3
92145-0326	C-3
92145-1319	E-9
92150-1143	D-6
92150-1186	D-9
92150-1301	C-8
92150-1301	C-9
92150-1433	D-4
92150-1604	F-9
92150-1689	D-9
92150-1771	F-6
92150-1771	F-8
92150-1829	H-9
92150-1884	C-10
92151-1105	H-9
92151-1131	C-10
92151-1131	D-8
92151-1133	D-8
92151-1134	C-10
92151-1134	D-8
92151-1135	C-10
92151-1149	E-7
92151-1152	B-3
92151-1197	C-4
92151-1201	C-10
92151-1226	C-3
92151-1241	G-7
92151-1252	D-10
92151-1277	D-9
92151-1289	F-8
92151-1305	C-10
92151-1357	F-11
92151-1389	C-11
92151-1389	C-4
92151-1389	C-6
92151-1461	C-8
92151-1461	C-9
92151-1462	C-8
92151-1462	C-9
92151-1463	C-8
92151-1463	C-9
92151-1464	C-8
92151-1464	C-9
92151-1465	C-8
92151-1465	C-9
92151-1537	F-9
92151-1605	E-9
92151-1654	B-7
92151-1654	G-4
92151-1703	E-5
92151-1703	E-6
92151-1755	B-7
92151-1930	B-9
92151-1930	C-10
92151-1930	C-11
92151-1937	C-6
92151-1937	D-6
92151-1937	D-7
92152-0048	H-9
92152-0087	E-14
92152-0118	F-3
92152-0134	C-14
92152-0295	E-10
92152-0300	B-13
92152-0301	F-3
92152-0302	F-3
92152-0306	B-9
92152-0310	E-14
92152-0311	E-4
92152-0312	G-5
92152-0372	G-7
92152-0398	D-9
92152-0410	F-11
92152-0550	G-5
92152-0551	E-6
92152-1075	C-3
92153-0018	C-10
92153-0339	B-3
92153-0411	H-10
92153-0417	F-5
92153-0474	E-3
92153-0506	F-11
92153-0530	C-4
92153-0530	C-6
92153-0542	C-4
92153-0549	D-5
92153-0587	F-6
92153-0589	E-10
92153-0627	F-5
92153-0627	F-7
92153-0628	F-5
92153-0725	F-7
92153-0759	B-6
92153-0793	B-4
92153-0816	H-10
92153-0823	E-4
92153-0951	D-4
92153-0952	D-3
92153-0957	B-10
92153-0958	B-14
92153-0959	C-8
92153-0959	C-9
92153-0960	C-8
92153-0960	C-9
92153-0962	C-4
92153-0962	C-6
92153-0963	C-4
92153-0963	C-6
92153-0964	C-4
92153-0964	C-6
92153-0967	G-10
92153-0969	D-3
92153-0972	B-3
92153-0976	E-4
92153-0995	E-4
92153-1011	B-5
92153-1244	E-11
92153-1267	E-10
92153-1283	C-13
92153-1321	B-3
92153-1357	B-7
92153-1394	B-9
92153-1414	C-4
92153-1414	C-6
92153-1414	D-4
92153-1424	G-7
92153-1428	E-4
92153-1446	G-3
92153-1446	G-9
92153-1449	C-8
92153-1449	C-9
92153-1450	C-8
92153-1450	C-9
92153-1472	F-11
92153-1484	E-8
92153-1503	G-5
92153-1517	E-5
92153-1517	E-6
92153-1616	F-12
92153-1624	F-7
92153-1630	E-9
92153-1766	E-8
92153-1783	D-7
92153-1805	C-6
92160-1007	D-9
92160-1116	B-7
92160-1161	E-8
92160-1162	H-9
92160-1167	F-14
92160-1197	H-9
92160-1613	G-4
92160-1613	G-5
92161-0041	C-14
92161-0149	F-13
92161-0163	G-7
92161-0179	C-14
92161-0191	G-5
92161-0266	E-10
92161-0267	C-4
92161-0267	C-6
92161-0279	G-5
92161-0280	G-5
92161-0283	G-9
92161-0301	D-9
92161-0302	B-6
92161-0303	F-3
92161-0309	B-6
92161-0349	H-9
92161-0354	F-14
92161-1084	G-7
92161-1300	C-3
92161-1313	G-7
92161-1321	F-13
92170-1017	B-6
92170-1067	F-5
92170-1091	F-7
92170-1114	C-12
92170-1167	C-4
92170-1167	C-6
92170-1833	F-12
92171-0069	G-9
92171-0261	D-10
92171-0314	B-6
92171-0316	B-4
92171-0337	D-10
92171-0435	B-6
92171-0463	F-7
92171-0640	G-9
92171-0657	G-9
92171-0658	G-3
92171-0789	B-4
92171-0813	B-4
92171-0836	D-5
92171-0911	C-10
92171-0955	F-7
92171-0971	G-3
92171-1089	B-3
92171-1415	G-9
92171-1424	G-9
92171-1559	G-9
92171-1568	B-7
92172-0006	H-10
92172-0009	B-6
92172-0064	C-12
92172-0175	G-8
92172-0183	F-9
92172-0209	B-14
92172-0242	G-8
92180-1014	B-8
92180-1016	B-8
92180-1018	B-8
92180-1020	B-8
92180-1022	B-8
92180-1024	B-8
92180-1026	B-8
92180-1028	B-8
92180-1030	B-8
92180-1032	B-8
92180-1034	B-8
92180-1036	B-8
92180-1038	B-8
92180-1040	B-8
92180-1042	B-8
92180-1044	B-8
92180-1046	B-8
92180-1048	B-8
92180-1050	B-8
92180-1052	B-8
92180-1054	B-8
92192-0225	C-4
92192-0225	C-6
92192-0231	B-6
92192-0232	B-6
92192-0264	B-6
92192-0307	D-10
92192-0315	D-4

Part No.	Grid No.
92192-0325	B-6
92200-0036	E-3
92200-0043	E-9
92200-0081	E-3
92200-0114	B-3
92200-0114	B-5
92200-0115	C-8
92200-0115	C-9
92200-0164	G-8
92200-0165	G-8
92200-0220	D-4
92200-0221	B-13
92200-0222	B-13
92200-0274	D-5
92200-0284	G-7
92200-0291	B-13
92200-0296	F-3
92200-0297	F-3
92200-0363	B-3
92200-0363	B-5
92200-1063	C-8
92200-1063	C-9
92200-1065	B-13
92200-1174	D-9
92200-1240	B-13
92200-1278	B-13
92200-1302	F-11
92200-1388	H-10
92200-1487	B-12
92210-0006	F-9
92210-0007	G-10
92210-0062	E-3
92210-0077	E-3
92210-0170	E-11
92210-0188	D-6
92210-0188	D-7
92210-0222	B-13
92210-0223	B-5
92210-0276	F-3
92210-0300	E-8
92210-1081	E-4
92210-1114	B-7
92210-1397	E-7
99924-1360-03	H-11
99939-1317-01	H-11
99946-1033-01	H-11
99950-1038-01	H-11
99951-1024-01	H-11
99952-1008-01	H-11
99953-1030-01	H-11
99954-1039-01	H-11
99955-1022-01	H-11
99976-1249	H-11
99976-1319	H-11
99976-1401	H-11
99976-1402	H-11
99986-1292	H-11
99986-1375	H-11
99986-1431	H-11
99999-0076	C-12

Air Cleaner....B-6
Balancer....B-11
Brake Pedal....F-4
Cables....G-3
Camshaft(s)....B-9
Chain Cover....G-4
Chassis Electrical Equipment....G-9
Clutch....B-12
Cowling....H-9
Crankcase Bolt Pattern....C-8/C-9
Crankcase(～ER650AE057323)....C-4/C-5
Crankcase(ER650AE057324～)....C-6/C-7
Crankshaft....B-10
Cylinder....B-5
Cylinder Head....B-3
Cylinder Head Cover....B-4
Decals(Black)(A7F)....H-5
Decals(Blue)(Black)(A8F)....H-8
Decals(Ebony)(A6S)....G-13
Decals(Green)(A8F)....H-7
Decals(Orange)(A7F)....H-6
Decals(Silver)(A6S)....G-14
Decals(Silver)(A7F)....H-4
Decals(Yellow)(A6S)....H-3
Engine Cover(s)....C-10
Engine Mount....E-4
Footrests....E-9
Frame....E-3
Frame Fittings(～JKAER650AAA035082)....E-5
Frame Fittings(JKAER650AAA035083～)....E-6
Front Brake....F-6
Front Fender(s)....E-10
Front Fork....F-10/F-11
Front Hub....E-14
Front Master Cylinder....F-5
Fuel Injection....C-14
Fuel Pump....C-13
Fuel Tank....F-12
Gear Change Drum....B-14
Gear Change Mechanism....C-3
Generator....D-4
Handlebar....F-9
Headlight(s)....G-6
Ignition Switch....G-10
Ignition System....D-5
Labels....G-12
Manual....H-11
Meter(s)....F-14
Muffler(s)....B-7
Oil Pan....C-11
Oil Pump....D-3
Owner’s Tools....G-11
Piston(s)....B-5
Radiator....D-9
Rear Brake....F-8
Rear Fender(s)....E-11
Rear Hub....F-3
Rear Master Cylinder....F-7
Seat....F-13
Seat Cover....G-5
Shift Fork(s)....B-14
Shock Absorber....E-8
Shroud....H-10
Side Covers....G-4
Stand(s)....E-12
Starter Motor(～ER650AE046804)....D-6
Starter Motor(ER650AE046805～)....D-7
Suspension....E-8
Swingarm....E-7
Taillight(s)....G-7
Tensioner....B-9
Throttle....C-12
Tires....E-13
Transmission....B-13
Turn Signals....G-8
Valve(s)....B-8
Water Pipe....D-10
Water Pump....D-8

Air Cleaner....B-6
Balancer....B-11
Brake Pedal....F-4
Cables....G-3
Camshaft(s)....B-9
Chain Cover....G-4
Chassis Electrical Equipment....G-9
Clutch....B-12
Cowling....H-9
Crankcase Bolt Pattern....C-8/C-9
Crankcase(～ER650AE057323)....C-4/C-5
Crankcase(ER650AE057324～)....C-6/C-7
Crankshaft....B-10
Cylinder....B-5
Cylinder Head....B-3
Cylinder Head Cover....B-4
Decals(Black)(A7F)....H-5
Decals(Blue)(Black)(A8F)....H-8
Decals(Ebony)(A6S)....G-13
Decals(Green)(A8F)....H-7
Decals(Orange)(A7F)....H-6
Decals(Silver)(A6S)....G-14
Decals(Silver)(A7F)....H-4
Decals(Yellow)(A6S)....H-3
Engine Cover(s)....C-10
Engine Mount....E-4
Footrests....E-9
Frame....E-3
Frame Fittings(～JKAER650AAA035082)....E-5
Frame Fittings(JKAER650AAA035083～)....E-6
Front Brake....F-6
Front Fender(s)....E-10
Front Fork....F-10/F-11
Front Hub....E-14
Front Master Cylinder....F-5
Fuel Injection....C-14
Fuel Pump....C-13
Fuel Tank....F-12
Gear Change Drum....B-14
Gear Change Mechanism....C-3
Generator....D-4
Handlebar....F-9
Headlight(s)....G-6
Ignition Switch....G-10
Ignition System....D-5
Labels....G-12
Manual....H-11
Meter(s)....F-14
Muffler(s)....B-7
Oil Pan....C-11
Oil Pump....D-3
Owner’s Tools....G-11
Piston(s)....B-5
Radiator....D-9
Rear Brake....F-8
Rear Fender(s)....E-11
Rear Hub....F-3
Rear Master Cylinder....F-7
Seat....F-13
Seat Cover....G-5
Shift Fork(s)....B-14
Shock Absorber....E-8
Shroud....H-10
Side Covers....G-4
Stand(s)....E-12
Starter Motor(～ER650AE046804)....D-6
Starter Motor(ER650AE046805～)....D-7
Suspension....E-8
Swingarm....E-7
Taillight(s)....G-7
Tensioner....B-9
Throttle....C-12
Tires....E-13
Transmission....B-13
Turn Signals....G-8
Valve(s)....B-8
Water Pipe....D-10
Water Pump....D-8

Air Cleaner....B-6
Balancer....B-11
Brake Pedal....F-4
Cables....G-3
Camshaft(s)....B-9
Chain Cover....G-4
Chassis Electrical Equipment....G-9
Clutch....B-12
Cowling....H-9
Crankcase Bolt Pattern....C-8/C-9
Crankcase(～ER650AE057323)....C-4/C-5
Crankcase(ER650AE057324～)....C-6/C-7
Crankshaft....B-10
Cylinder....B-5
Cylinder Head....B-3
Cylinder Head Cover....B-4
Decals(Black)(A7F)....H-5
Decals(Blue)(Black)(A8F)....H-8
Decals(Ebony)(A6S)....G-13
Decals(Green)(A8F)....H-7
Decals(Orange)(A7F)....H-6
Decals(Silver)(A6S)....G-14
Decals(Silver)(A7F)....H-4
Decals(Yellow)(A6S)....H-3
Engine Cover(s)....C-10
Engine Mount....E-4
Footrests....E-9
Frame....E-3
Frame Fittings(～JKAER650AAA035082)....E-5
Frame Fittings(JKAER650AAA035083～)....E-6
Front Brake....F-6
Front Fender(s)....E-10
Front Fork....F-10/F-11
Front Hub....E-14
Front Master Cylinder....F-5
Fuel Injection....C-14
Fuel Pump....C-13
Fuel Tank....F-12
Gear Change Drum....B-14
Gear Change Mechanism....C-3
Generator....D-4
Handlebar....F-9
Headlight(s)....G-6
Ignition Switch....G-10
Ignition System....D-5
Labels....G-12
Manual....H-11
Meter(s)....F-14
Muffler(s)....B-7
Oil Pan....C-11
Oil Pump....D-3
Owner’s Tools....G-11
Piston(s)....B-5
Radiator....D-9
Rear Brake....F-8
Rear Fender(s)....E-11
Rear Hub....F-3
Rear Master Cylinder....F-7
Seat....F-13
Seat Cover....G-5
Shift Fork(s)....B-14
Shock Absorber....E-8
Shroud....H-10
Side Covers....G-4
Stand(s)....E-12
Starter Motor(～ER650AE046804)....D-6
Starter Motor(ER650AE046805～)....D-7
Suspension....E-8
Swingarm....E-7
Taillight(s)....G-7
Tensioner....B-9
Throttle....C-12
Tires....E-13
Transmission....B-13
Turn Signals....G-8
Valve(s)....B-8
Water Pipe....D-10
Water Pump....D-8

Air Cleaner....B-6
Balancer....B-11
Brake Pedal....F-4
Cables....G-3
Camshaft(s)....B-9
Chain Cover....G-4
Chassis Electrical Equipment....G-9
Clutch....B-12
Cowling....H-9
Crankcase Bolt Pattern....C-8/C-9
Crankcase(～ER650AE057323)....C-4/C-5
Crankcase(ER650AE057324～)....C-6/C-7
Crankshaft....B-10
Cylinder....B-5
Cylinder Head....B-3
Cylinder Head Cover....B-4
Decals(Black)(A7F)....H-5
Decals(Blue)(Black)(A8F)....H-8
Decals(Ebony)(A6S)....G-13
Decals(Green)(A8F)....H-7
Decals(Orange)(A7F)....H-6
Decals(Silver)(A6S)....G-14
Decals(Silver)(A7F)....H-4
Decals(Yellow)(A6S)....H-3
Engine Cover(s)....C-10
Engine Mount....E-4
Footrests....E-9
Frame....E-3
Frame Fittings(～JKAER650AAA035082)....E-5
Frame Fittings(JKAER650AAA035083～)....E-6
Front Brake....F-6
Front Fender(s)....E-10
Front Fork....F-10/F-11
Front Hub....E-14
Front Master Cylinder....F-5
Fuel Injection....C-14
Fuel Pump....C-13
Fuel Tank....F-12
Gear Change Drum....B-14
Gear Change Mechanism....C-3
Generator....D-4
Handlebar....F-9
Headlight(s)....G-6
Ignition Switch....G-10
Ignition System....D-5
Labels....G-12
Manual....H-11
Meter(s)....F-14
Muffler(s)....B-7
Oil Pan....C-11
Oil Pump....D-3
Owner’s Tools....G-11
Piston(s)....B-5
Radiator....D-9
Rear Brake....F-8
Rear Fender(s)....E-11
Rear Hub....F-3
Rear Master Cylinder....F-7
Seat....F-13
Seat Cover....G-5
Shift Fork(s)....B-14
Shock Absorber....E-8
Shroud....H-10
Side Covers....G-4
Stand(s)....E-12
Starter Motor(～ER650AE046804)....D-6
Starter Motor(ER650AE046805～)....D-7
Suspension....E-8
Swingarm....E-7
Taillight(s)....G-7
Tensioner....B-9
Throttle....C-12
Tires....E-13
Transmission....B-13
Turn Signals....G-8
Valve(s)....B-8
Water Pipe....D-10
Water Pump....D-8

Air Cleaner....B-6
Balancer....B-11
Brake Pedal....F-4
Cables....G-3
Camshaft(s)....B-9
Chain Cover....G-4
Chassis Electrical Equipment....G-9
Clutch....B-12
Cowling....H-9
Crankcase Bolt Pattern....C-8/C-9
Crankcase(～ER650AE057323)....C-4/C-5
Crankcase(ER650AE057324～)....C-6/C-7
Crankshaft....B-10
Cylinder....B-5
Cylinder Head....B-3
Cylinder Head Cover....B-4
Decals(Black)(A7F)....H-5
Decals(Blue)(Black)(A8F)....H-8
Decals(Ebony)(A6S)....G-13
Decals(Green)(A8F)....H-7
Decals(Orange)(A7F)....H-6
Decals(Silver)(A6S)....G-14
Decals(Silver)(A7F)....H-4
Decals(Yellow)(A6S)....H-3
Engine Cover(s)....C-10
Engine Mount....E-4
Footrests....E-9
Frame....E-3
Frame Fittings(～JKAER650AAA035082)....E-5
Frame Fittings(JKAER650AAA035083～)....E-6
Front Brake....F-6
Front Fender(s)....E-10
Front Fork....F-10/F-11
Front Hub....E-14
Front Master Cylinder....F-5
Fuel Injection....C-14
Fuel Pump....C-13
Fuel Tank....F-12
Gear Change Drum....B-14
Gear Change Mechanism....C-3
Generator....D-4
Handlebar....F-9
Headlight(s)....G-6
Ignition Switch....G-10
Ignition System....D-5
Labels....G-12
Manual....H-11
Meter(s)....F-14
Muffler(s)....B-7
Oil Pan....C-11
Oil Pump....D-3
Owner’s Tools....G-11
Piston(s)....B-5
Radiator....D-9
Rear Brake....F-8
Rear Fender(s)....E-11
Rear Hub....F-3
Rear Master Cylinder....F-7
Seat....F-13
Seat Cover....G-5
Shift Fork(s)....B-14
Shock Absorber....E-8
Shroud....H-10
Side Covers....G-4
Stand(s)....E-12
Starter Motor(～ER650AE046804)....D-6
Starter Motor(ER650AE046805～)....D-7
Suspension....E-8
Swingarm....E-7
Taillight(s)....G-7
Tensioner....B-9
Throttle....C-12
Tires....E-13
Transmission....B-13
Turn Signals....G-8
Valve(s)....B-8
Water Pipe....D-10
Water Pump....D-8

Air Cleaner....B-6
Balancer....B-11
Brake Pedal....F-4
Cables....G-3
Camshaft(s)....B-9
Chain Cover....G-4
Chassis Electrical Equipment....G-9
Clutch....B-12
Cowling....H-9
Crankcase Bolt Pattern....C-8/C-9
Crankcase(～ER650AE057323)....C-4/C-5
Crankcase(ER650AE057324～)....C-6/C-7
Crankshaft....B-10
Cylinder....B-5
Cylinder Head....B-3
Cylinder Head Cover....B-4
Decals(Black)(A7F)....H-5
Decals(Blue)(Black)(A8F)....H-8
Decals(Ebony)(A6S)....G-13
Decals(Green)(A8F)....H-7
Decals(Orange)(A7F)....H-6
Decals(Silver)(A6S)....G-14
Decals(Silver)(A7F)....H-4
Decals(Yellow)(A6S)....H-3
Engine Cover(s)....C-10
Engine Mount....E-4
Footrests....E-9
Frame....E-3
Frame Fittings(～JKAER650AAA035082)....E-5
Frame Fittings(JKAER650AAA035083～)....E-6
Front Brake....F-6
Front Fender(s)....E-10
Front Fork....F-10/F-11
Front Hub....E-14
Front Master Cylinder....F-5
Fuel Injection....C-14
Fuel Pump....C-13
Fuel Tank....F-12
Gear Change Drum....B-14
Gear Change Mechanism....C-3
Generator....D-4
Handlebar....F-9
Headlight(s)....G-6
Ignition Switch....G-10
Ignition System....D-5
Labels....G-12
Manual....H-11
Meter(s)....F-14
Muffler(s)....B-7
Oil Pan....C-11
Oil Pump....D-3
Owner’s Tools....G-11
Piston(s)....B-5
Radiator....D-9
Rear Brake....F-8
Rear Fender(s)....E-11
Rear Hub....F-3
Rear Master Cylinder....F-7
Seat....F-13
Seat Cover....G-5
Shift Fork(s)....B-14
Shock Absorber....E-8
Shroud....H-10
Side Covers....G-4
Stand(s)....E-12
Starter Motor(～ER650AE046804)....D-6
Starter Motor(ER650AE046805～)....D-7
Suspension....E-8
Swingarm....E-7
Taillight(s)....G-7
Tensioner....B-9
Throttle....C-12
Tires....E-13
Transmission....B-13
Turn Signals....G-8
Valve(s)....B-8
Water Pipe....D-10
Water Pump....D-8

Air Cleaner....B-6
Balancer....B-11
Brake Pedal....F-4
Cables....G-3
Camshaft(s)....B-9
Chain Cover....G-4
Chassis Electrical Equipment....G-9
Clutch....B-12
Cowling....H-9
Crankcase Bolt Pattern....C-8/C-9
Crankcase(～ER650AE057323)....C-4/C-5
Crankcase(ER650AE057324～)....C-6/C-7
Crankshaft....B-10
Cylinder....B-5
Cylinder Head....B-3
Cylinder Head Cover....B-4
Decals(Black)(A7F)....H-5
Decals(Blue)(Black)(A8F)....H-8
Decals(Ebony)(A6S)....G-13
Decals(Green)(A8F)....H-7
Decals(Orange)(A7F)....H-6
Decals(Silver)(A6S)....G-14
Decals(Silver)(A7F)....H-4
Decals(Yellow)(A6S)....H-3
Engine Cover(s)....C-10
Engine Mount....E-4
Footrests....E-9
Frame....E-3
Frame Fittings(～JKAER650AAA035082)....E-5
Frame Fittings(JKAER650AAA035083～)....E-6
Front Brake....F-6
Front Fender(s)....E-10
Front Fork....F-10/F-11
Front Hub....E-14
Front Master Cylinder....F-5
Fuel Injection....C-14
Fuel Pump....C-13
Fuel Tank....F-12
Gear Change Drum....B-14
Gear Change Mechanism....C-3
Generator....D-4
Handlebar....F-9
Headlight(s)....G-6
Ignition Switch....G-10
Ignition System....D-5
Labels....G-12
Manual....H-11
Meter(s)....F-14
Muffler(s)....B-7
Oil Pan....C-11
Oil Pump....D-3
Owner’s Tools....G-11
Piston(s)....B-5
Radiator....D-9
Rear Brake....F-8
Rear Fender(s)....E-11
Rear Hub....F-3
Rear Master Cylinder....F-7
Seat....F-13
Seat Cover....G-5
Shift Fork(s)....B-14
Shock Absorber....E-8
Shroud....H-10
Side Covers....G-4
Stand(s)....E-12
Starter Motor(～ER650AE046804)....D-6
Starter Motor(ER650AE046805～)....D-7
Suspension....E-8
Swingarm....E-7
Taillight(s)....G-7
Tensioner....B-9
Throttle....C-12
Tires....E-13
Transmission....B-13
Turn Signals....G-8
Valve(s)....B-8
Water Pipe....D-10
Water Pump....D-8