Kawasaki

VULCAN1500 CLASSIC
VN1500 CLASSIC

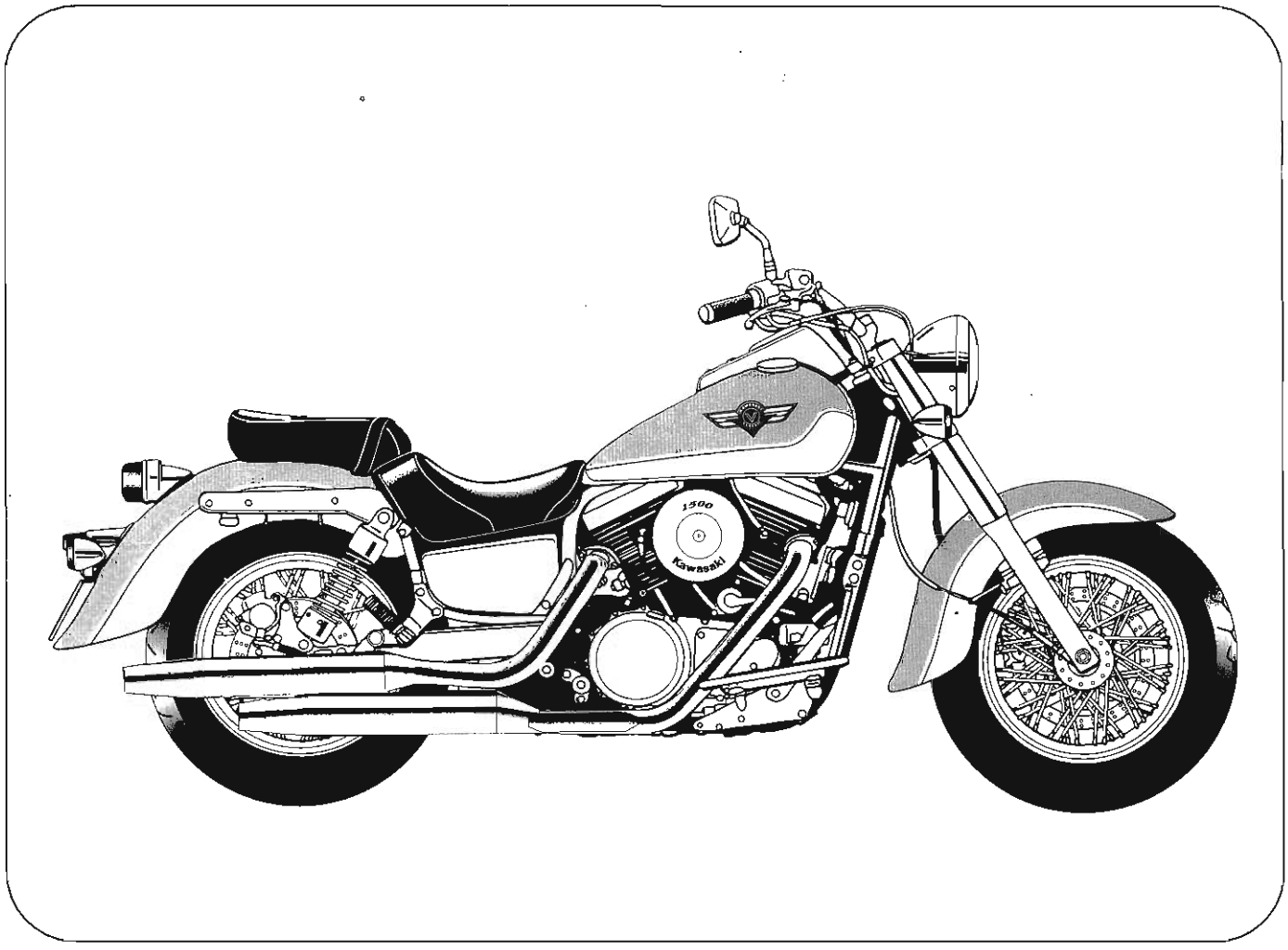

Motorcycle Service Manual Supplement

Quick Reference Guide

General Information	1
Fuel System	2
Cooling System	3
Engine Top End	4
Clutch	5
Engine Lubrication System	6
Engine Removal/Installation	7
Crankshaft/Transmission	8
Wheels/Tires	9
Final Drive	10
Brakes	11
Suspension	12
Steering	13
Frame	14
Electrical System	15
Appendix	16

This quick reference guide will assist you in locating a desired topic or procedure.

- Bend the pages back to match the black tab of the desired chapter number with the black tab on the edge at each table of contents page.
- Refer to the sectional table of contents for the exact pages to locate the specific topic required.

Kawasaki

VULCAN1500 CLASSIC
VN1500 CLASSIC

Motorcycle
Service Manual
Supplement

All rights reserved. No parts of this publication may be reproduced, stored in a retrieval system, or transmitted in any form or by any means, electronic mechanical photocopying, recording or otherwise, without the prior written permission of Quality Assurance Department/Consumer Products Group/Kawasaki Heavy Industries, Ltd., Japan.

No liability can be accepted for any inaccuracies or omissions in this publication, although every possible care has been taken to make it as complete and accurate as possible.

The right is reserved to make changes at any time without prior notice and without incurring an obligation to make such changes to products manufactured previously. See your dealer for the latest information on product improvements incorporated after this publication.

All information contained in this publication is based on the latest product information available at the time of publication. Illustrations and photographs in this publication are intended for reference use only and may not depict actual model component parts.

© Kawasaki Heavy Industries. Ltd. 1996

First Edition (1) : Feb. 15, 1996 (M)

LIST OF ABBREVIATIONS

A	ampere(s)	lb	pounds(s)
ABDC	after bottom dead center	m	meter(s)
AC	alternating current	min	minute(s)
ATDC	after top dead center	N	newton(s)
BBDC	before bottom dead center	Pa	pascal(s)
BDC	bottom dead center	PS	horsepower
BTDC	before top dead center	psi	pound(s) per square inch
°C	degree(s) Celsius	r	revolution
DC	direct current	rpm	revolution(s) per minute
F	farad(s)	TDC	top dead center
°F	degree(s) Fahrenheit	TIR	total indicator reading
ft	foot, feet	V	volt(s)
g	gram(s)	W	watt(s)
h	hour(s)	Ω	ohm(s)
L	liter(s)		

Read OWNER'S MANUAL before operating.

EMISSION CONTROL INFORMATION

To protect the environment in which we all live, Kawasaki has incorporated crankcase emission (1) and exhaust emission (2) control systems in compliance with applicable regulations of the United States Environmental Protection Agency and California Air Resources Board. Additionally, Kawasaki has incorporated an evaporative emission control system (3) in compliance with applicable regulations of the California Air Resources Board on vehicles sold in California only.

1. Crankcase Emission Control System

   This system eliminates the release of crankcase vapors into the atmosphere. Instead, the vapors are routed through an oil separator to the intake side of the engine. While the engine is operating, the vapors are drawn into combustion chamber, where they are burned along with the fuel and air supplied by the carburetion system.

2. Exhaust Emission Control System

   This system reduces the amount of pollutants discharged into the atmosphere by the exhaust of this motorcycle. The fuel and ignition systems of this motorcycle have been carefully designed and constructed to ensure an efficient engine with low exhaust pollutant levels.

3. Evaporative Emission Control System

   Vapors caused by fuel evaporation in the fuel system are not vented into the atmosphere. Instead, fuel vapors are routed into the running engine to be burned, or stored in a canister when the engine is stopped. Liquid fuel is caught by a vapor separator and returned to the fuel tank.

The Clean Air Act, which is the Federal law covering motor vehicle pollution, contains what is commonly referred to as the Act's "tampering provisions."

"Sec. 203(a) The following acts and the causing thereof are prohibited...

(3)(A) for any person to remove or render inoperative any device or element of design installed on or in a motor vehicle or motor vehicle engine in compliance with regulations under this title prior to its sale and delivery to the ultimate purchaser, or for any manufacturer or dealer knowingly to remove or render inoperative any such device or element of design after such sale and delivery to the ultimate purchaser.

(3)(B) for any person engaged in the business of repairing, servicing, selling, leasing, or trading motor vehicles or motor vehicle engines, or who operates a fleet of motor vehicles knowingly to remove or render inoperative any device or element of design installed on or in a motor vehicle or motor vehicle engine in compliance with regulations under this title following its sale and delivery to the ultimate purchaser..."

(Continued on next page.)

NOTE

- *The phrase "remove or render inoperative any device or element of design" has been generally interpreted as follows:*
  1. *Tampering does not include the temporary or rendering inoperative of devices or elements of design in order to perform maintenance.*
  2. *Tampering could include:*
     a. *Maladjustment of vehicle components such that the emission standards are exceeded.*
     b. *Use of replacement parts or accessories which adversely affect the performance or durability of the motorcycle.*
     c. *Addition of components or accessories that result in the vehicle exceeding the standards.*
     d. *Permanently removing, disconnecting, or rendering inoperative any component or element of design of the emission control systems.*

WE RECOMMEND THAT ALL DEALERS OBSERVE THESE PROVISIONS OF FEDERAL LAW, THE VIOLATION OF WHICH IS PUNISHABLE BY CIVIL PENALTIES NOT EXCEEDING $10,000 PER VIOLATION.

TAMPERING WITH NOISE CONTROL SYSTEM PROHIBITED

Federal law prohibits the following acts or the causing thereof: (1) The removal or rendering inoperative by any person other than for purposes of maintenance, repair, or replacement, of any device or element of design incorporated into any new vehicle for the purpose of noise control prior to its sale or delivery to the ultimate purchaser or while it is in use, or (2) the use of the vehicle after such device or element of design has been removed or rendered inoperative by any person.

Among those acts presumed to constitute tampering are the acts listed below:

- Replacement of the original exhaust system or muffler with a component not in compliance with Federal regulations.
- Removal of the muffler(s) or any internal portion of the muffler(s).
- Removal of the air box or air box cover.
- Modifications to the muffler(s) or air intake system by cutting, drilling, or other means if such modifications result in increased noise levels.

Foreword

This service manual supplement contains only the information unique to the models covered. It must be used with the base service manual listed below. Read both this supplement and the base manual for complete information on proper service procedures for the models covered by this manual.

Base Manual	Part Number
VN1500	99924-1078

This manual is designed primarily for use by trained mechanics in a properly equipped shop. However, it contains enough detail and basic information to make it useful to the owner who desires to perform his own basic maintenance and repair work. A basic knowledge of mechanics, the proper use of tools, and workshop procedures must be understood in order to carry out maintenance and repair satisfactorily. Whenever the owner has insufficient experience or doubts his ability to do the work, all adjustments, maintenance, and repair should be carried out only by qualified mechanics.

In order to perform the work efficiently and to avoid costly mistakes, read the text, thoroughly familiarize yourself with the procedures before starting work, and then do the work carefully in a clean area. Whenever special tools or equipment are specified, do not use makeshift tools or equipment. Precision measurements can only be made if the proper instruments are used, and the use of substitute tools may adversely affect safe operation.

For the duration of the warranty period, we recommend that all repairs and scheduled maintenance be performed in accordance with this service manual. Any owner maintenance or repair procedure not performed in accordance with this manual may void the warranty.

To get the longest life out of your motorcycle:

- Follow the Periodic Maintenance Chart in the Service Manual.
- Be alert for problems and non-scheduled maintenance.
- Use proper tools and genuine Kawasaki Motorcycle parts. Special tools, gauges, and testers that are necessary when servicing Kawasaki motorcycles are introduced by the Special Tool Catalog or Manual. Genuine parts provided as spare parts are listed in the Parts Catalog.
- Follow the procedures in this manual carefully. Don't take shortcuts.
- Remember to keep complete records of maintenance and repair with dates and any new parts installed.

How to Use This Manual

In preparing this manual, we divided the product into its major systems. These systems became the manual's chapters. All information for a particular system from adjustment through disassembly and inspection is located in a single chapter.

The Quick Reference Guide shows you all of the product's system and assists in locating their chapters. Each chapter in turn has its own comprehensive Table of Contents.

The Periodic Maintenance Chart is located in the General Information chapter. The chart gives a time schedule for required maintenance operations.

If you want spark plug information, for example, go to the Periodic Maintenance Chart first. The chart tells you how frequently to clean and gap the plug. Next, use the Quick Reference Guide to locate the Electrical System chapter. Then, use the Table of Contents on the first page of the chapter to find the Spark Plug section.

Whenever you see these WARNING and CAUTION symbols, heed their instructions! Always follow safe operating and maintenance practices.

⚠WARNING

This warning symbol identifies special instructions or procedures which, if not correctly followed, could result in personal injury, or loss of life.

CAUTION

This caution symbol identifies special instructions or procedures which, if not strictly observed, could result in damage to or destruction of equipment.

This manual contains four more symbols (in addition to WARNING and CAUTION) which will help you distinguish different types of information.

NOTE

○ *This note symbol indicates points of particular interest for more efficient and convenient operation.*

(●): indicates a procedural step or work to be done.
(○): indicates a procedural sub-step or how to do the work of the procedural step it follows. It also precedes the text of a NOTE.
(★): indicates a conditional step or what action to take based on the results of the test or inspection in the procedural step or sub-step it follows.

In most chapters an exploded view illustration of the system components follows the Table of Contents. In these illustrations you will find the instructions indicating which parts require specified tightening torque, oil, grease or a locking agent during assembly.

1

General Information

Table of Contents

Before Servicing 1-2
Model Identification 1-4
General Specifications 1-6
Periodic Maintenance Chart 1-8
Technical Information - V-Engine 1-9
Technical Information - 4 Valves and 2 Spark Plugs per Cylinder 1-10
Technical Information - Deceleration Torque Limiting Clutch 1-11
Technical Information - Balancer Mechanism 1-12
Technical Information - Coasting Enricher 1-13
Technical Information - Maintenance Free Battery 1-14
Technical Information - Hydraulic Lash Adjuster 1-16
Torque and Locking Agent 1-21
Special Tools and Sealant 1-25
Cable, Wire, and Hose Routing 1-32

Before Servicing

Before starting to service a motorcycle, careful reading of the applicable section is recommended to eliminate unnecessary work. Photographs, diagrams, notes, cautions, warnings, and detailed descriptions have been included wherever necessary. Nevertheless, even a detailed account has limitations, a certain amount of basic knowledge is also required for successful work.

Especially note the following:

(1) Dirt

Before removal and disassembly, clean the motorcycle. Any dirt entering the engine or other parts will work as an abrasive and shorten the life of the motorcycle. For the same reason, before installing a new part, clean off any dust or metal filings.

(2) Battery Ground

Remove the ground (−) lead from the battery before performing any disassembly operations on the motorcycle. This prevents: (a) the possibility of accidentally turning the engine over while partially disassembled. (b) sparks at electrical connections which will occur when they are disconnected. (c) damage to electrical parts.

(3) Installation, Assembly

Generally, installation or assembly is the reverse of removal or disassembly. But if this Service Manual has installation or assembly procedures, follow them. Note parts locations and cable, wire, and hose routing during removal or disassembly so they can be installed or assembled in the same way. It is preferable to mark and record the locations and routing as much as possible.

(4) Tightening Sequence

Generally, when installing a part with several bolts, nuts, or screws, start them all in their holes and tighten them to a snug fit. Then tighten them evenly in a cross pattern. This is to avoid distortion of the part and/or causing gas or oil leakage. Conversely when loosening the bolts, nuts, or screws, first loosen all of them by about a quarter turn and then remove them. Where there is a tightening sequence indication in this Service Manual, the bolts, nuts, or screws must be tightened in the order and method indicated.

(5) Torque

When torque values are given in this Service Manual, use them. Either too little or too much torque may lead to serious damage. Use a good quality, reliable torque wrench.

(6) Force

Common sense should dictate how much force is necessary in assembly and disassembly. If a part seems especially difficult to remove or install, stop and examine what may be causing the problem. Whenever tapping is necessary, tap lightly using a wooden or plastic-faced mallet. Use an impact driver for screws (particularly for the removal of screws held by a locking agent) in order to avoid damaging the screw heads.

(7) Edges

Watch for sharp edges, especially during major engine disassembly and assembly. Protect your hands with gloves or a piece of thick cloth when lifting the engine or turning it over.

(8) High-Flash Point Solvent

A high-flash point solvent is recommended to reduce fire danger. A commercial solvent commonly available in North America is Stoddard solvent (generic name). Always follow manufacturer and container directions regarding the use of any solvent.

(9) Gasket, O-Ring

Do not reuse a gasket or O-ring once it has been in service. The mating surfaces around the gasket should be free of foreign matter and perfectly smooth to avoid oil or compression leaks.

(10) Liquid Gasket, Non-Permanent Locking Agent

Follow manufacturer's directions for cleaning and preparing surfaces where these compounds will be used. Apply sparingly. Excessive amounts may block engine oil passages and cause serious damage. An example of a non-permanent locking agent commonly available in North America is Loctite Lock'n Seal (Blue).

(11) Press

A part installed using a press or driver, such as a wheel bearing, should first be coated with oil on its outer or inner circumference so that it will go into place smoothly.

(12) Ball Bearing and Needle Bearing

Do not remove a ball bearing or a needle bearing unless it is absolutely necessary. Replace any ball or needle bearings that were removed with new ones, as removal generally damages bearings. Install bearings with the marked side facing out applying pressure evenly with a suitable driver. Only press on the race that forms the press fit with the base component to avoid damaging the bearings. This prevents severe stress on the balls or needles and races, and prevent races and balls or needles from being dented. Press a ball bearing until it stops at the stops in the hole or on the shaft.

(13) Oil Seal and Grease Seal

Replace any oil or grease seals that were removed with new ones, as removal generally damages seals.

When pressing in a seal which has manufacturer's marks, press it in with the marks facing out. Seals should be pressed into place using a suitable driver, which contacts evenly with the side of seal, until the face of the seal is even with the end of the hole. Before a shaft passes through a seal, apply a little high temperature grease on the lips to reduce rubber to metal friction.

(14) Circlip, Retaining Ring, and Cotter Pin

Replace any circlips, retaining rings, and cotter pins that were removed with new ones, as removal weakens and deforms them. When installing circlips and retaining rings, take care to compress or expand them only enough to install them and no more.

(15) Lubrication

Engine wear is generally at its maximum while the engine is warming up and before all the rubbing surfaces have an adequate lubricative film. During assembly, oil or grease (whichever is more suitable) should be applied to any rubbing surface which has lost its lubricative film. Old grease and dirty oil should be cleaned off. Deteriorated grease has lost its lubricative quality and may contain abrasive foreign particles.

Don't use just any oil or grease. Some oils and greases in particular should be used only in certain applications and may be harmful if used in an application for which they are not intended. This manual makes reference to molybdenum disulfide grease (MoS_2) in the assembly of certain engine and chassis parts. Always check manufacturer recommendations before using such special lubricants.

(16) Electrical Wires

All the electrical wires are either single-color or two-color and, with only a few exceptions, must be connected to wires of the same color. On any of the two-color wires there is a greater amount of one color and a lesser amount of a second color, so a two-color wire is identified by first the primary color and then the secondary color. For example, a yellow wire with thin red stripes is referred to as a "yellow/red" wire; it would be a "red/yellow" wire if the colors were reversed to make red the main color.

Wire (cross-section)	Name of Wire Color
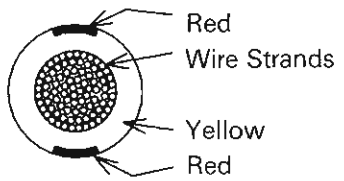	Yellow/Red

(17) Replacement Parts

When there is a replacement instruction, replace these parts with new ones every time they are removed. These replacement parts will be damaged or lose their original function once removed.

(18) Inspection

When parts have been disassembled, visually inspect these parts for the following conditions or other damage. If there is any doubt as to the condition of them, replace them with new ones.

Abrasion	Crack	Hardening	Warp
Bent	Dent	Scratch	Wear
Color change	Deterioration	Seizure	

(19) Specifications

Specification terms are defined as follows:

"Standards": show dimensions or performances which brand-new parts or systems have.

"Service Limits": indicate the usable limits. If the measurement shows excessive wear or deteriorated performance, replace the damaged parts.

VN1500-D1 (US and Canada) Left Side View:

VN1500-D1 (US and Canada) Right Side View:

VN1500-D1 (Other than US and Canada) Left Side View:

VN1500-D1 (Other than US and Canada) Right Side View:

General Specifications

Items			VN1500-D1
Dimensions:			
Overall length			2 500 mm
Overall width			965 mm
Overall height			1 100 mm
Wheelbase			1 660 mm
Road clearance			125 mm
Seat height			700 mm
Dry mass			292 kg, (CA) 292.5 kg
Curb mass:	Front		138 kg
	Rear		172 kg, (CA) 172.5 kg
Fuel tank capacity			16 L
Performance:			
Minimum turning radius			2.9 m
Engine:			
Type			4-stroke, SOHC, V2-cylinder
Cooling system			Liquid-cooled
Bore and stroke			102 x 90 mm
Displacement			1 470 mL
Compression ratio			8.6 : 1
Maximum horsepower			47 kW (64 PS) @4 700 r/min (rpm), (FR) UTAC's norm 45 kW (61 PS) @4 700 r/min (rpm), (ST) 33.2 kW (45 PS) @4 000 r/min (rpm), (US) –
Maximum torque			112 N-m (11.4 kg-m, 82.5 ft-lb) @3 000 r/min(rpm), (ST) 86 N-m (8.8 kg-m, 63.6 ft-lb) @3 000 r/min (rpm), (FR) –, (US) –
Carburetion system			Carburetor, Keihin CVK40 x 1
Starting system			Electric starter
Ignition system			Battery and coil (transistorized)
Timing advance			Electronically advanced (digital)
Ignition timing			From 5 ° BTDC @800 r/min (rpm), (CA)(ST)(AR)(FG) From 5° BTDC @1 000 r/min (rpm)
Spark plugs			NGK DPR7EA-9 or ND X22EPR-U9
Cylinder numbering method			Front to Rear, 1-2
Firing order			1-2
Valve timing:			
	Inlet	Open	18° BTDC, (ST) 47° BTDC
		Close	62° ABDC, (ST) 41° ABDC
		Duration	260°, (ST) 268°
	Exhaust	Open	62° BBDC, (ST) 41° BBDC
		Close	22° ATDC, (ST) 51° ATDC
		Duration	264°, (ST) 272°
Lubrication system			Forced lubrication (wet sump)
Engine oil:			
	Grade		SE, SF, or SG class
	Viscosity		SAE10W-40, 10W-50, 20W-40, or 20W-50
	Capacity		3.5 L (when engine is completely dry)

Items		VN1500-D1
Drive Train:		
Primary reduction system:		
Type		Gear
Reduction ratio		1.517 (85/56)
Clutch type		Wet multi disc
Transmission:		
Type		4-speed, constant mesh, return shift
Gear ratios:	1st	2.500(40/16)
	2nd	1.375(33/24)
	3rd	1.035(29/28)
	4th	0.781(25/32)
Final drive system:		
Type		Shaft
Reduction ratio		2.619 (15/21x33/9)
Overall drive ratio		3.105 @Top gear
Final gear case oil:		
Type		API GL-5 Hypoid gear oil SAE90 (above 5°C) SAE80 (below 5°C)
Capacity		200 mL
Frame:		
Type		Tubular, double cradle
Caster (rake angle)		32°
Trail		123 mm
Front tire:	Type	Tube
	Size	130/90-16 67H
Rear tire:	Type	Tube
	Size	150/80-16 71H
Front suspension:	Type	Telescopic fork
	Wheel travel	150 mm
Rear suspension:	Type	Swingarm
	Wheel travel	87 mm
Brake type:	Front	Single disc
	Rear	Single disc
Electrical Equipment:		
Battery		12 V 14 Ah
Headlight:	Type	
	Bulb	12 V 60/55 W
Tail/brake light		12 V 5/21 W x 2, (US)(CN) 12 V 8/27 W x 2
Alternator:	Type	Three-phase AC
	Rated output	25 A × 14 V@6 000 r/min (rpm)

Specifications are subject to change without notice, and may not apply to every country.

(AR) : Austria
(CA) : California
(FG) : Germany
(FR) : France
(ST) : Switzerland
(US): United States

Periodic Maintenance Chart

The scheduled maintenance must be done in accordance with this chart to keep the motorcycle in good running condition. **The initial maintenance is vitally important and must not be neglected.**

FREQUENCY / OPERATION	Whichever comes first ➡ / Every ⬇	*ODOMETER READING							
		1 000km (600 mile)	6 000km (4 000 mile)	12 000km (7 500 mile)	18 000km (12 000 mile)	24 000km (15 000 mile)	30 000km (20 000 mile)	36 000km (24 000 mile)	
Spark plug – clean and gap †			●	●	●	●	●	●	
Air suction valve – check †			●	●	●	●	●	●	
Air cleaner element –clean †#				●		●		●	
Throttle grip play – check †		●		●		●		●	
Idle speed – adjust		●		●		●		●	
Evaporative emission control system (CA) – check †		●	●	●	●	●	●	●	
Engine oil – change #	6 months	●	●	●	●	●	●	●	
Oil filter – replace		●		●		●		●	
Radiator hoses, connections – check †		●							
Coolant – change	2 years					●			
Final gear case oil level – check †				●		●		●	
Final gear case oil – change		●						●	
Propeller shaft joint – lubricate				●				●	
Clutch fluid level – check †	month	●	●	●	●	●	●	●	
Clutch fluid – change	2 years					●			
Clutch master cylinder cup and dust seal –replace	4 years								
Clutch slave cylinder piston seal – replace	4 years								
Brake lining or pad wear – check † #			●	●	●	●	●	●	
Brake fluid level – check †	month	●	●	●	●	●	●	●	
Brake fluid – change	2 years					●			
Brake master cylinder cup and dust seal – replace	4 years								
Caliper piston seal and dust seal – replace	4 years								
Brake light switch – check †		●	●	●	●	●	●	●	
Steering – check †		●	●	●	●	●	●	●	
Steering stem bearing – lubricate	2 years					●			
Front fork oil – change	2 years					●			
Rear shock absorber oil leak – check †				●		●		●	
Front fork oil leak – check †				●		●		●	
Tire wear – check †			●	●	●	●	●	●	
Spoke tigthness and rim runout – check †		●	●	●	●	●	●	●	
Swingarm pivot, lubricate				●		●		●	
General lubrication – perform				●		●		●	
Nuts, bolts, and fasteners tightness – check †		●		●		●		●	

\# : Service more frequently when operating in high speed, frequent starting/stopping, dust, wet, mud, or other harsh riding condition.
* : For higher odometer readings, repeat at the frequency interval established here.
† : Replace, add, adjust, clean, or torque if necessary.
(CA): California Vehicle only

Technical Information – V-Engine

The VN1500 is equipped with a 2-cylinder V-engine. The general characteristics of a V-engine are as follows.

- The combustion interval between cylinders is not even (uneven-interval combustion), which gives the V-twin its unique dynamic exhaust sound and vibration. It is not a methodical sound or vibration but more like a heartbeat or horse's hooves.

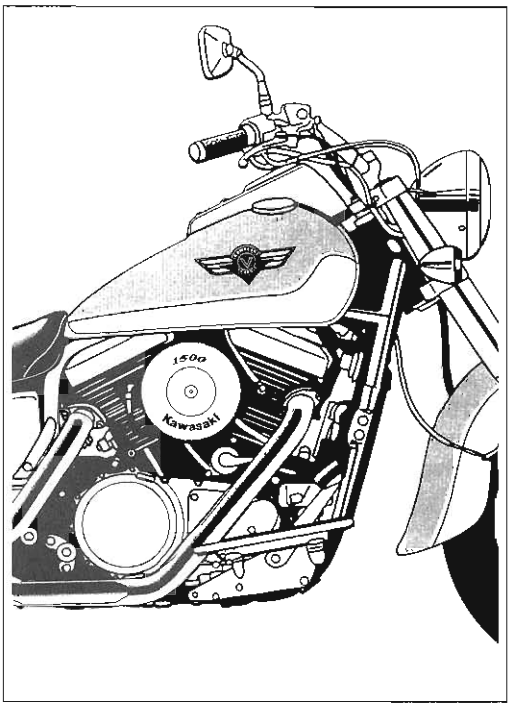

- Because two connecting rods [A] are fitted to one crankpin, the bending force and length of the crankshaft are about half that in a parallel twin engine. In other words, the inside of the engine can be narrower and the banking angle can be steeper.
- Regarding engine vibration, there is less primary vibration, which is the largest source of vibration, than in a parallel twin engine.

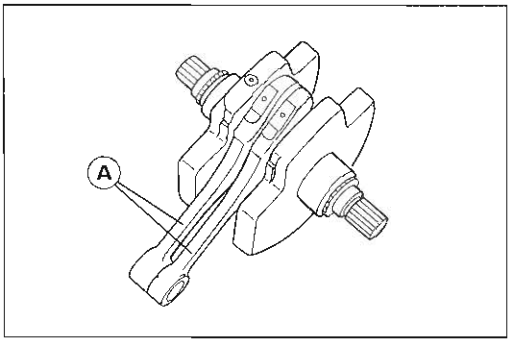

Technical Information – 4 Valves and 2 Spark Plugs per Cylinder

Kawasaki's VN1500 engine is designed to have 4 valves and 2 spark plugs per cylinder for more power at low and mid-range engine speeds, better drivability and lower fuel consumption.

The 4-valve per cylinder design utilizing a combustion chamber of greater capacity provides greater intake and exhaust port area for increased breathing and combustion efficiency. One intake/exhaust valve per cylinder has a limitation in engine power output.

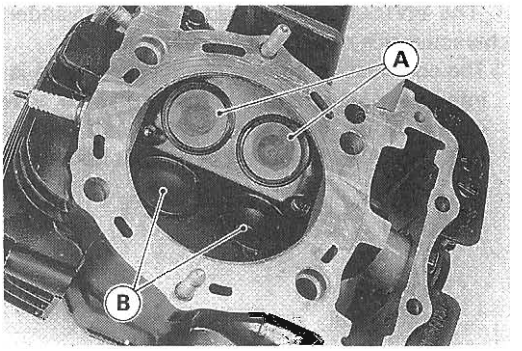

Intake Valves [A] Exhaust Valves [B]

Also, with one spark plug [A] on each side of the cylinder head, the VN1500's large combustion chamber engine can burn the fuel/air mixture in a wider area in a shorter time, resulting in an increase in mean effective pressure and torque.

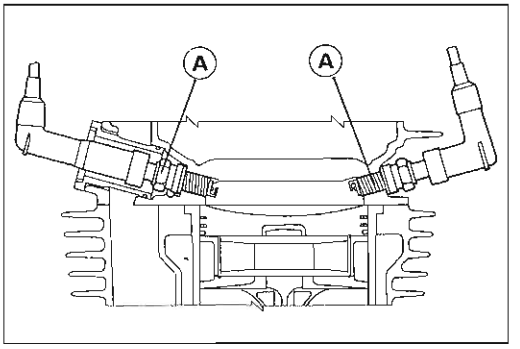

Technical Information - Deceleration Torque Limiting Clutch

A machine equipped with a 4-stroke engine may offer the advantage of effective braking with the engine. If the speed is reduced too abruptly by down-shifting, braking with the engine can be excessive, causing the phenomenon called rear-wheel hop.

During cruising, power is transmitted in this order: crankshaft → clutch gear [A] → clutch plates [B] → outer clutch hub [C] → inner clutch hub [D] → transmission [E] → propeller shaft → rear wheel.

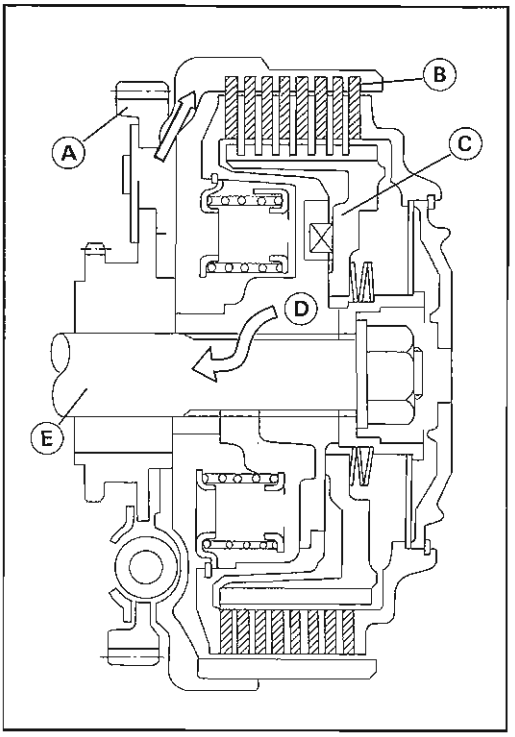

During an abrupt down-shift, this order is reversed and powerful torque is transmitted from the crankshaft to the piston. In other words, the rear wheel tries to turn the engine, while cylinder compression pressure works to prevent the rear wheel from turning so as to check that movement, so it is like a brake being applied to the machine.

The outer clutch hub [C] and inner clutch hub [D] are engaged by ramps (slopes) [F], and are pressed by the deceleration torque limiting clutch springs [G] so as not to separate from one another. Shown here is the normal driving status, where the torque is transmitted normally and the ramps are not activated.

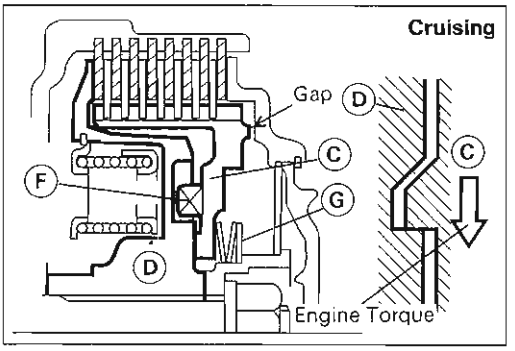

When the speed is suddenly reduced, the ramps [F] are activated by the reverse torque generated and the outer clutch hub [C] slides in the axial direction against the spring [G] force, producing a gap with the clutch plates [B], causing the clutch to slide to release the reverse torque.

Because engine braking is reduced during abrupt deceleration, the rider can down-shift when cornering and the like without fear of rear-wheel hop, thereby enjoying a smoother ride.

That is the purpose of the deceleration torque limiting clutch.

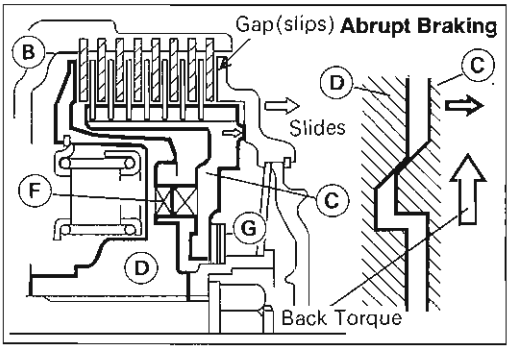

Technical Information - Balancer Mechanism

The Kawasaki V-twin engine uses a gear-driven single shaft balancer system located in front of the crank having one weight on each side of the engine. The two connecting rods [A] are connected to the same crankpin, making the balancer system simple, light-weight, and compact.

The balancer shaft rotates at the same rpm as the crankshaft but in the opposite direction, eliminating primary force.

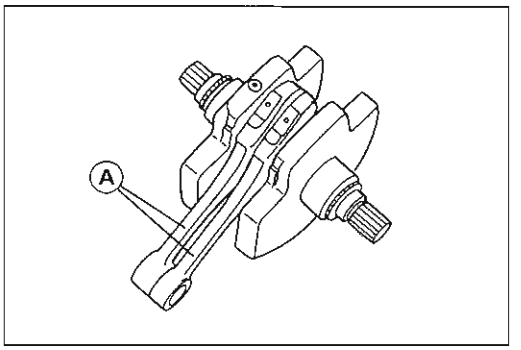

The inertial forces F_R,F_F of both pistons and the centrifugal force of both crankshaft counterweights **2f** create the unbalanced force of F_1, which is the main cause of engine vibration.

With one weight on each end, the balancer shaft creates a force equal to F_1 reducing vibration.

As shown in the figure, the balancer weights are timed so they exert centrifugal forces (Balancer Force: $-F_1$) in the opposite direction to that of the unbalanced force of the crankshaft F_1 to keep the system in balance. This balance is maintained in any crankshaft position.

Balancer Mechanism

F_F : Front Piston Inertial Force
F_R : Rear Piston Inertial Force
F_C : Resultant Force of F_F and F_R
F_1 : Unbalanced Force (Resultant Force)
$-F_1$: Balanced Force
2f : Crankshaft Counter Weight Forces

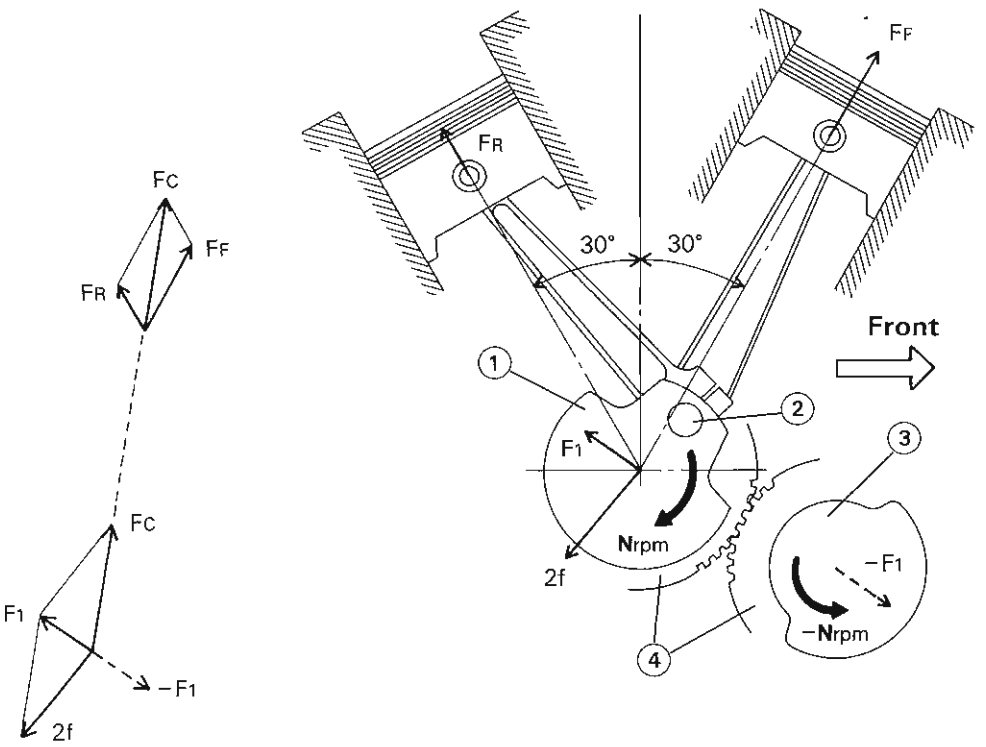

1. Crankshaft
2. Crankpin
3. Balancer
4. Gears

Technical Information - Coasting Enricher

Generally, the greater the engine displacement per cylinder, the leaner the mixture during engine braking causing misfiring or backfiring. To cope with these, a coasting enricher [A] is used for the VN1500. The coasting enricher system prevents backfiring during engine braking by supplying a rich fuel mixture to the engine.

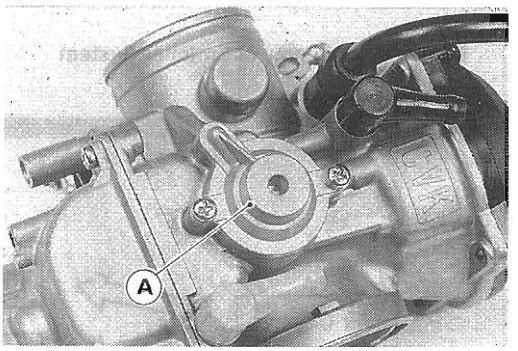

When the motorcycle is cruising or accelerating, the engine vacuum is low, and the return spring [3] pushes the valve in its opened position [5]. The passage [6] is open and the air runs through the pilot jet [7] for better atomization.

During engine braking, a high vacuum is generated behind the butterfly valve [11]. This draws the diaphragm [2] against the return spring [3] to close the valve [12], and then the passage [6]. The mixture becomes rich to prevent backfiring because the amount of air is reduced.

Coating Enricher System

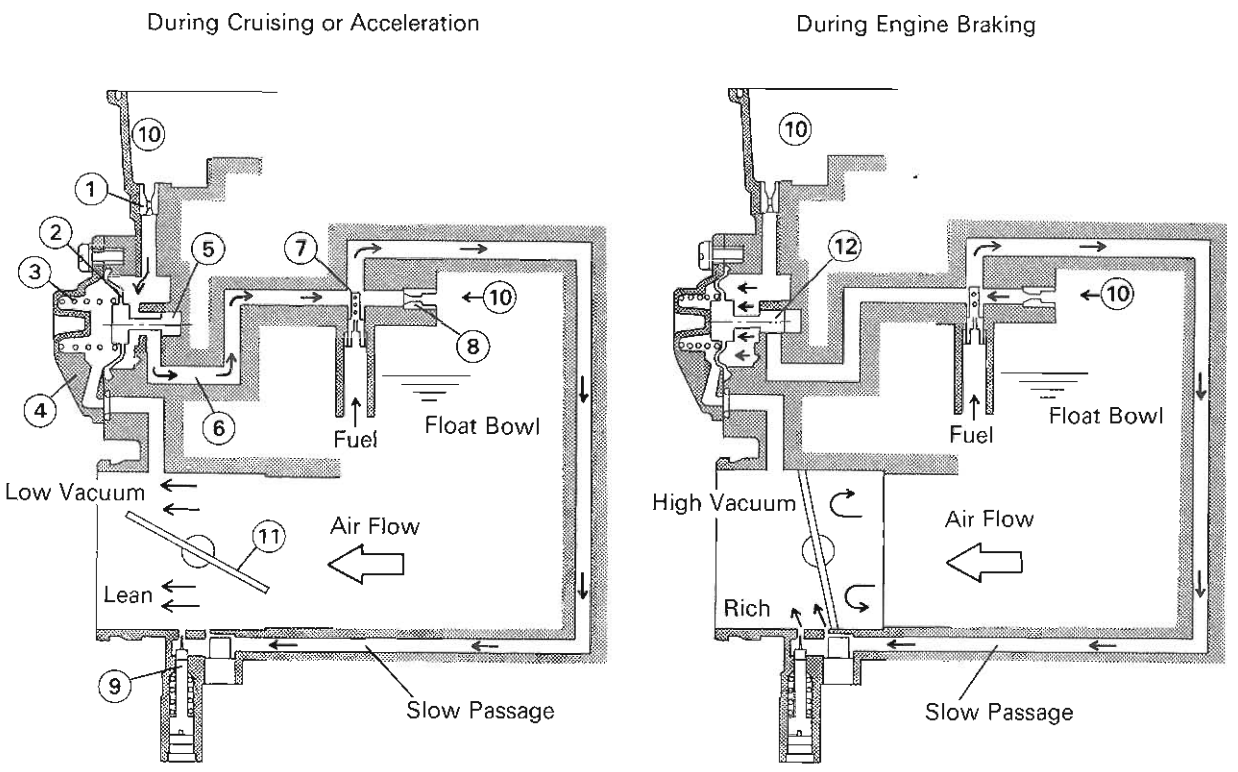

1. Coasting Enricher Jet
2. Diaphragm
3. Return Spring
4. Cover
5. Valve Opened
6. Passage
7. Pilot Jet
8. Pilot Air Jet
9. Pilot Screw
10. Air Cleaner Housing
11. Butterfly Valve (Throttle Valve)
12. Valve Closed

Fuel and Air Supply of Enricher System

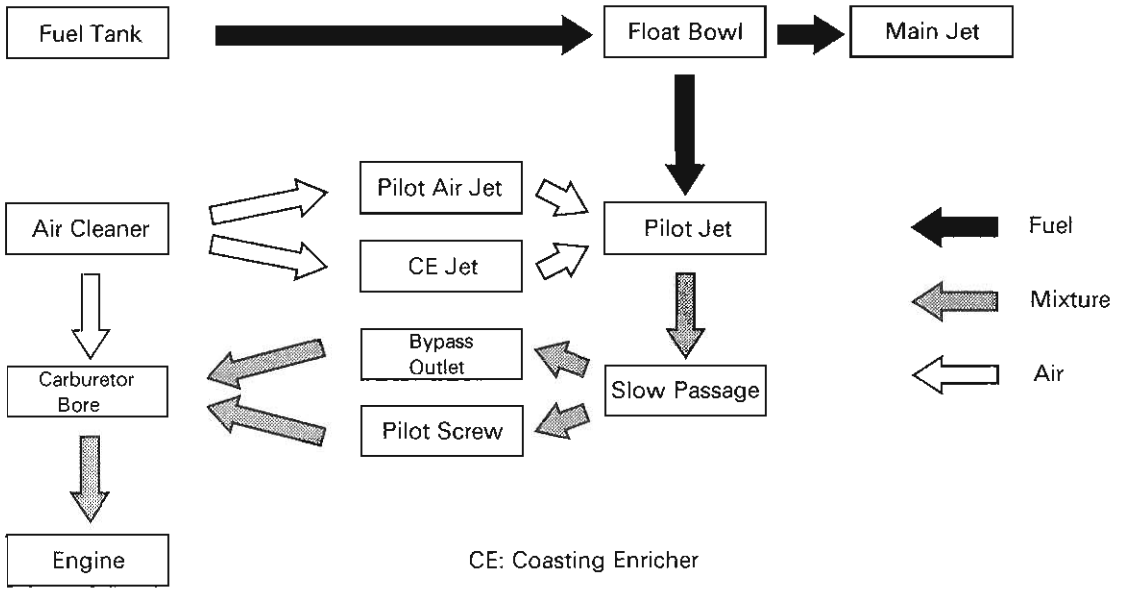

Technical Information – Maintenance Free Battery

A maintenance free battery is installed in this model. The maintenance free battery is a sealed type, and so cannot be performed the electrolyte level check and topping-up.

(I) Construction

Terminal (lead alloy) [A]
Seal cap [B]
Lid [C]
Positive plate (lead and lead alloy) [D]
Pole (lead alloy) [E]
Separator [F]
Negative plate (lead and lead alloy) [G]
Container [H]
Viewed from L – L [I]
Safety valve [J]
Filter [K]

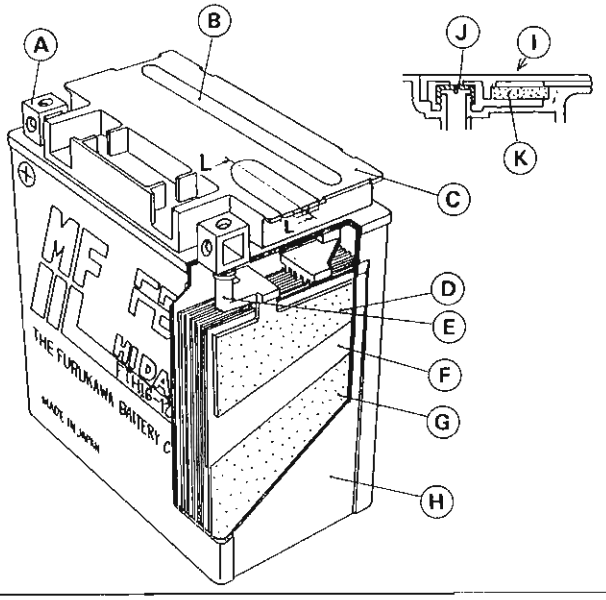

(II) Main Features

1) Maintenance free..... It is not necessary to check the electrolyte level and top-up the electrolyte.
2) No electrolyte leakage..... As the electrolyte is retained firmly in the special separators, there is no free electrolyte in the battery.
3) Instant activation system..... It can be used instantly after filling only the electrolyte without initial charge.

4) One-push motion electrolyte filling ..... It is possible to fill the electrolyte by easy one-push motion.
5) Safety construction ..... If the battery internal pressure rises abnormally high, the safety valve opens to release the gas inside the battery to restore the normal pressure and prevent the battery from rupturing. After restoring the normal pressure, the safety valve closes and the battery is sealed again. Moreover, a ceramic filter is disposed on top of the safety valve under the lid to remove risk of ignition or explosion caused by fire from outside.
6) Compact and high performance ..... No presence of free electrolyte allows the battery made lower in height, thus resulting in enhanced volume efficiency. Moreover, gas being absorbed inside the battery eliminates the need for a gas exhaust tube.
7) Strong charge/discharge characteristics .... It can amply withstand deep charge/discharge cycles.

(III) Principle of Sealing Structure

A lead-acid battery operates under the following chemical reaction:

(+)			(−)	Discharge	(−)			(+)
PbO_2	+ $2H_2SO_4$	+	Pb	⇄	$PbSO_4$	+ $2H_2O$	+	$PbSO_4$
(Lead peroxide) Positive active material	(Sulfuric acid) Electrolyte		(Spongy lead) Negative active material	Charge	(Lead sulfate) Positive active material	(water) Electrolyte		(Lead sulfate) Negative active material

Normally in an ordinary lead-acid battery when it comes to an end of a charge, where the lead sulfate being a discharge product returns to lead peroxide and spongy lead, the charge current flowing thereafter is used exclusively to decompose electrolytically water from the electrolyte, thus resulting in generation of hydrogen gas from the negative plate and oxygen gas from the positive plate. The gases so generated are released out of the battery, causing the amount of electrolyte decreased to require occasional water replenishment.

A maintenance free battery, however, is so designed that, when it is overcharged, even if the positive plate is fully charged, the negative plate remains not fully turned to spongy lead. Therefore, even when the positive plate is overcharged generating oxygen gas, the negative plate is no fully charged, hence generating no hydrogen gas.

Moreover, the oxygen gas generated from the positive plate immediately reacts with the charged active material on the negative plate, and returns to water, with the ultimate result of no water loss.

Pb	+	1/2 O_2	→	(PbO)		
Negative active material (charged state)		Oxygen generated from positive plate		Negative active material		

(PbO)	+	H_2SO_4	→	$PbSO_4$	+	H_2O
		Electrolyte		Negative active material (charged state)		Water

Thus, the negative plate is made as not to get fully charged. Even if the overcharge continues, the oxygen gas generated inside the battery is absorbed by the negative plate, a process called oxygen cycle, which keeps water loss theoretically at nil, and allows the battery to be sealed.

Technical Information - Hydraulic Lash Adjuster (Hydraulic Valve Clearance Adjuster)

Outline

The lash adjuster keeps valve clearance at zero automatically, and gets rid of troublesome valve adjustment as well as periodic inspection.

When compared with the conventional mechanical lifter, the hydraulic lash adjuster has almost no tappet noise and can provide constant valve timing due to full-time compliance of the valve with the cam in spite of changes in engine temperature and rpm.

Accordingly, reliable engine performance such as better starting, shorter warm-up time, and more stable idling can be expected.

Structure

The center pivot rocker type lash adjusters [A] are fitted into the rocker arm [B] at one end, while the other end rests on the end of the valve stem [C].

If air bubbles get into the lash adjuster, they will cause tappet noise at low engine speeds and cause valve bouncing at high speeds. To prevent air from getting in, there is an oil reservoir [D] high in the rocker case to collect the oil sent to the cylinder head so that air bubbles [E] can escape from the oil before the oil goes to the lash adjusters.

Also, two filters [F] at the reservoir outlet are provided to keep dirt or other contaminants out of the lash adjusters.

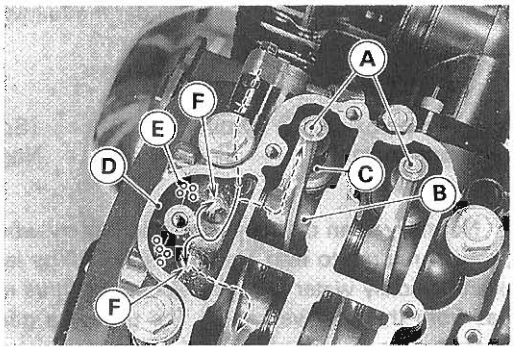

In the lash adjuster, a caged ball (with a spring) is used as a check valve.

Rocker Arm Reservoir [A]
Chamber [B]
Ball Cage [C]
Rocker Arm [D]
O-ring [E]
Body [F]
Pivot Plunger [G]
Oil Feed Passages [H]
Ball – check Valve [I]
Plunger Spring [J]
Ball Spring [K]
High Pressure Chamber [L]
Oil Passage [M]

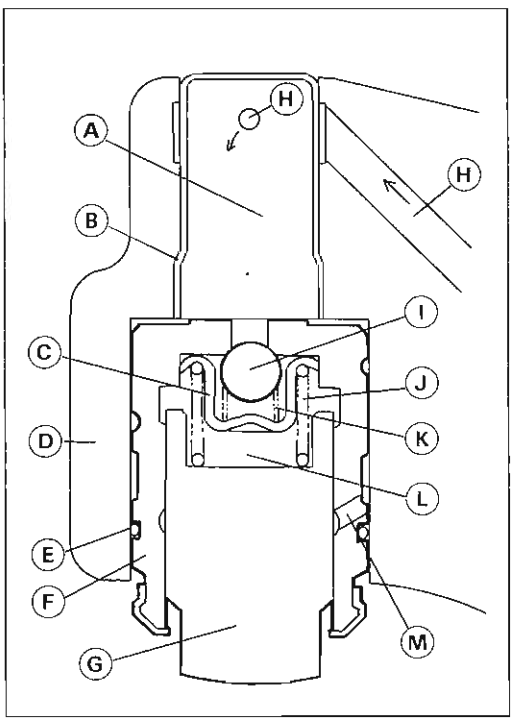

Operation

1. When the valve rests on its seat, the plunger spring [J] pushes the plunger [G] down, forcing the end of the rocker arm [N] to move upwards until the rocker contacts the cam base circle [O] hard enough to keep zero valve clearance.

Valve Seated

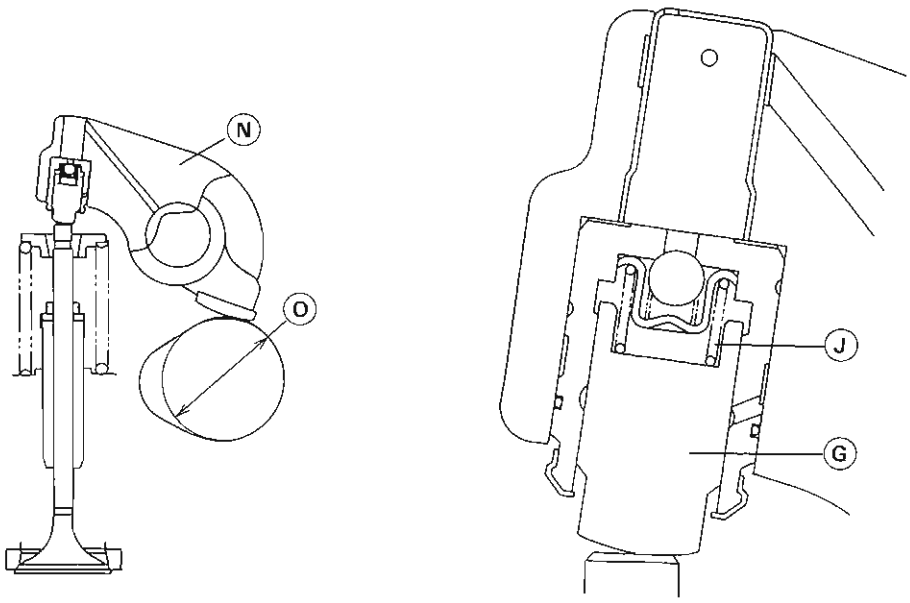

2. As the cam rotates and the cam flank [P] contacts the rocker arm [N], the plunger [G] pushes the plunger spring [J], causing a rise in oil pressure in the high pressure chamber [L] and forcing the ball-check valve [I] to close the oil passage [Q]. Before the ball-check valve completely closes, however, there is a moment of an oil leakage through the oil seat [R], allowing the plunger [G] to sink a little (Primary leak-down).

Valve Starts Opening : Oil pressure rises and closes the ball-check valve

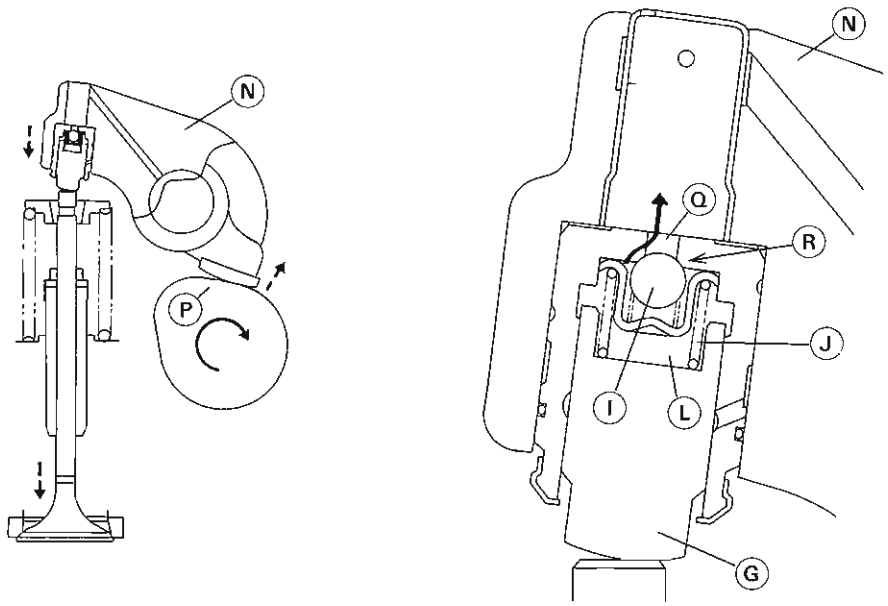

3. Due to the incompressible nature of oil, the plunger [G] effectively becomes a solid, non-compressible unit, and the cam lobe [S] forces its intake or exhaust valve open [T]. While the valve is off its seat, there is also a small amount of oil leakage (leak-down) [U] between the plunger [G] and the body [F] by valve spring force, allowing plunger to sink [V] a little, causing a slight cam lift loss.

Valve Fully Open : Plunger sinks slightly, allowing a little oil leakage.

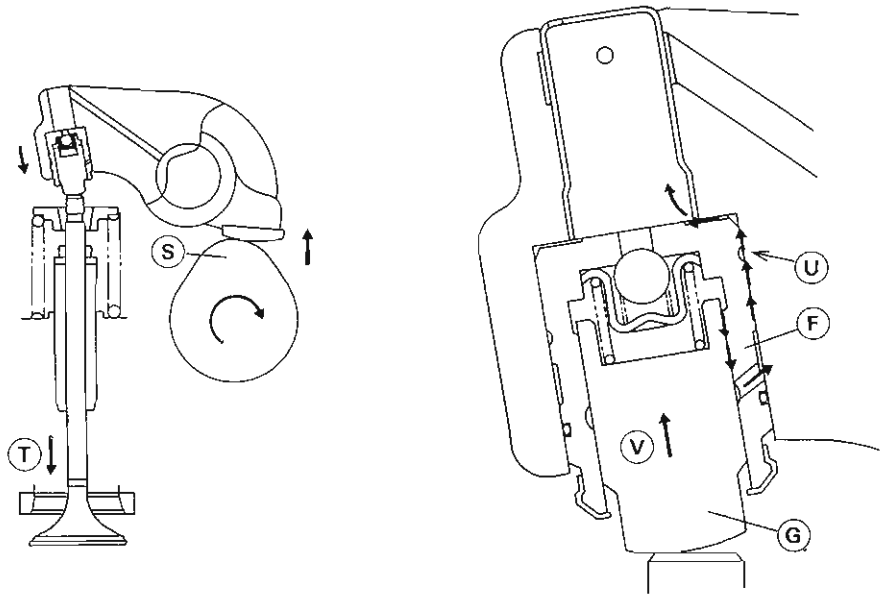

4. With the intake or exhaust valve resting on its seat, the rocker arm [N] does not push the plunger [G], but instead, the plunger spring [J] forces the plunger [G] down and the ball valve [I] to open against the ball spring [K] to admit oil into the high pressure chamber. The oil drawn in at this moment compensates for excess oil leakage in the former process as well as for changes in valve train component dimensions caused by heat and wear to keep the clearance constantly at zero.

Valve closed: Ball check valve opens to admit oil, compensating for the leak-down, heat expansion, and wear.

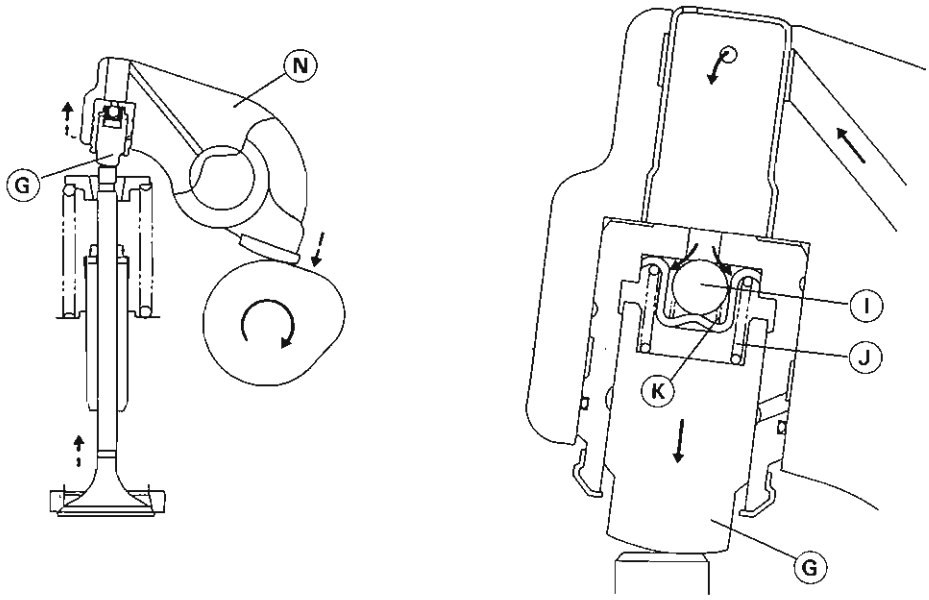

Lash adjuster operation can be shown as a graph. The leak-down allows for heat expansion of the engine parts (particularly the valve stem), and prevents the valve from being held off its seat in the closed position. And, the leak-down is minute and becomes less at high rpm.

Lash Adjuster Cycle

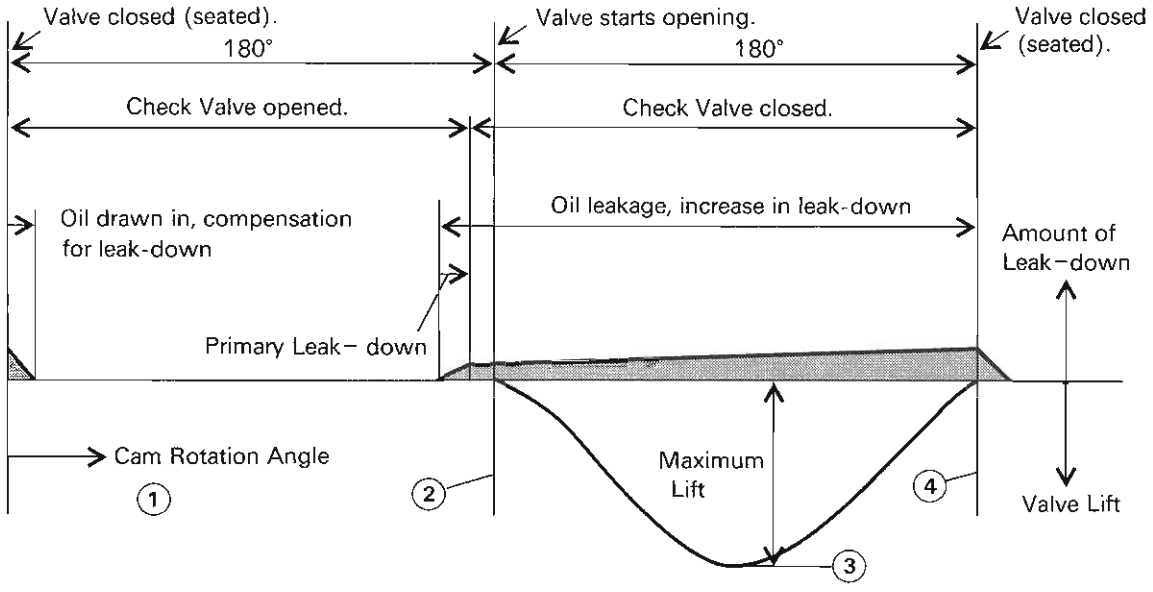

Servicing Precautions

- Do not drop the lash adjuster or hit it sharply. If it is deformed, the plunger will not operate smoothly.
- To clean the adjuster, rinse it in clean kerosene and the blow it dry with compressed air. Do not dry it with a cloth to prevent dust or lint contamination.
- Be careful not to get any adhesives or liquid gasket on the adjuster during servicing.
- Prior to installation, be sure to air-bleed it, using kerosene or engine oil as explained in the Base Manual. Kerosene is preferable for rapid air bleeding. Do not leave the HLA upside down or sideways too long. Air will get into the oil.
  After bleeding, install the HLA into the rocker arm in the engine oil so that the oil gets into the rocker arm reservoir easily. After installation, be careful not to tip the rocker arm assembly and allow the kerosene or oil to leak out of the rocker arm assembly.
- Always keep the specified amount of oil in the engine to prevent air bubbles from getting into the oil.
- Strictly observe the required periodic replacement of the engine oil and oil filter to keep air and other contaminants out of the oil and to prevent abnormally high oil line pressure.
- Insufficient engine oil will cause air to enter the lash adjuster and develop tappet noise or poor engine running at both low and high speeds. Excessive oil pressure will cause the lash adjuster to hold the valve open, resulting in hard starting, poor idling and loss of power at high speeds. To prevent such troubles, the oil line must be in good condition.

Torque and Locking Agent

The following tables list the tightening torque for the major fasteners requiring use of a non-permanent locking agent or liquid gasket.

Letters used in the "Remarks" column mean:
- **G** : Apply grease to the threads.
- **EO** : Apply engine oil to the threads and the seating surface.
- **L** : Apply a non-permanent locking agent to the threads.
- **Lh** : Left-hand threads.
- **O** : Apply an oil to the threads and seating surface.
- **S** : Tighten the fasteners following the specified sequence.
- **SS** : Apply silicone sealant.
- **St** : Stake the fasteners to prevent loosening.
- **R** : Replacement parts

The table below, relating tightening torque to thread diameter, lists the basic torque for the bolts and nuts. Use this table for only the bolts and nuts which do not require a specific torque value. All of the values are for use with dry solvent-cleaned threads.

Basic Torque for General Fasteners

Threads dia. (mm)	Torque		
	N-m	kg-m	ft-lb
5	3.4 ~ 4.9	0.35 ~ 0.50	30 ~ 43 in-lb
6	5.9 ~ 7.8	0.60 ~ 0.80	52 ~ 69 in-lb
8	14 ~ 19	1.4 ~ 1.9	10.0 ~ 13.5
10	25 ~ 34	2.6 ~ 3.5	19.0 ~ 25
12	44 ~ 61	4.5 ~ 6.2	33 ~ 45
14	73 ~ 98	7.4 ~ 10.0	54 ~ 72
16	115 ~ 155	11.5 ~ 16.0	83 ~ 115
18	165 ~ 225	17.0 ~ 23.0	125 ~ 165
20	225 ~ 325	23 ~ 33	165 ~ 240

Fastener		Torque			Remarks
		N-m	kg-m	ft-lb	
Fuel System:					
Inlet Manifold Bolts		12	1.2	104 in-lb	
Fuel Tap Plate Screws		0.8	0.08	7 in-lb	
Air Cleaner Base Holder Bolts		9.8	1.0	87 in-lb	
Air Cleaner Base Bolts		9.8	1.0	87 in-lb	
Air Cleaner Base Screws		1.1	0.11	10 in-lb	L
Air Cleaner Cover Screws		9.8	1.0	87 in-lb	
Cooling System:					
Radiator Hose Clamp Screws		2.5	0.25	22 in-lb	
Coolant Air Bleeder Bolt		7.8	0.80	69 in-lb	
Radiator Fan Switch		18	1.8	13.0	
Water Temperature Switch		7.8	0.80	69 in-lb	SS
Water Pump Impeller Bolt		9.8	1.0	87 in-lb	Lh
Water Pump Cover Bolts		9.8	1.0	87 in-lb	
Water Pipe Bolts		9.8	1.0	87 in-lb	
Engine Top End:					
Spark Plugs		18	1.8	13.0	
Spark Plug Retainer		12	1.2	104 in-lb	
Air Suction Valve Cover Bolts		4.9	0.50	43 in-lb	
Chain Tensioner Mounting Bolts		9.8	1.0	87 in-lb	S
Chain Tensioner Cap		20	2.0	14.5	S
Chain Tensioner Lockbolt		11	1.1	95 in-lb	S
Camshaft Sprocket Bolts		15	1.5	11.0	L
Oil Hose Flange Bolts		9.8	1.0	87 in-lb	
Rocker Shafts		25	2.5	18.0	
Rocker Case Nuts	12 mm	78	8.0	58	EO,S
	8 mm	25	2.5	18.0	S
Rocker Case Bolts	6 mm	8.8	0.90	78 in-lb	S
Cylinder Head Nuts		25	2.5	18.0	S
Rocker Case Cover Bolts		8.8	0.90	78 in-lb	S
Camshaft Chain Guide Bolts		9.8	1.0	87 in-lb	L
Cylinder Nuts		25	2.5	18.0	S
Inlet Manifold Bolts		12	1.2	104 in-lb	S

Fastener	Torque			Remarks
	N-m	kg-m	ft-lb	
Clutch:				
Clutch Lever Pivot Bolt	1.0	0.10	9 in-lb	
Clutch Lever Pivot Bolt Locknut	5.9	0.60	52 in-lb	
Clutch Reservoir Cap Screws	1.5	0.15	13 in-lb	
Clutch Slave Cylinder Bleed Valve	7.8	0.80	69 in-lb	
Clutch Slave Cylinder Bolts	–	–	–	L
Clutch Hose Banjo Bolts	25	2.5	18.0	
Clutch Master Cylinder Clamp Bolts	9.8	1.0	87 in-lb	S
Starter Lockout Switch Screws	1.2	0.12	10 in-lb	
Push Rod Guide Bolts	9.8	1.0	87 in-lb	L
Clutch Cover Bolts	9.8	1.0	87 in-lb	
Clutch Cover Damper Bolts (outside)	9.8	1.0	87 in-lb	L
Clutch Cover Damper Bolts (inside)	9.8	1.0	87 in-lb	EO (tip)
Clutch Cover Damper Screws	4.9	0.50	43 in-lb	L
Clutch Hub Nut	145	15.0	110	EO
Engine Lubrication System:				
Oil Filler Plug	1.5	0.15	13 in-lb	
Oil Screen Plug	20	2.0	14.5	
Engine Drain Plug	20	2.0	14.5	
Oil Filter (Cartridge type)	Hand-tight or 18	Hand-tight or 1.8	Hand-tight or 13.0 in-lb	O
Oil Filter Bolt	25	2.5	18.0	SS
Oil Pressure Relief Valve	15	1.5	11.0	L
Oil Hose Banjo Bolts	9.8	1.0	87 in-lb	
Oil Pressure Switch Terminal Bolt	1.5	0.15	13 in-lb	
Oil Pressure Switch	15	1.5	11.0	SS
Oil Pump Mounting Bolts	9.8	1.0	87 in-lb	
Oil Hose Banjo Bolts	9.8	1.0	87 in-lb	
Oil Hose Flange Bolt (outside)	9.8	1.0	87 in-lb	
Oil Pipe Holder Bolts (inside)	8.8	0.90	78 in-lb	L
Oil Pipe Clamp Bolts (inside)	9.8	1.0	87 in-lb	L
Crankcase Oil Nozzle	3.4	0.35	30 in-lb	
Engine Removal/Installation:				
Downtube Bolts	44	4.5	33	
Engine Mounting Bolts and Nuts	44	4.5	33	
Engine Mounting Bracket Bolts	23	2.3	16.5	
Engine Ground Terminal Bolt	9.8	1.0	87 in-lb	
Crankshaft/Transmission:				
Crankcase Bolts 10 mm	39	4.0	29	S
8 mm	21	2.1	15.0	S
6 mm	9.8	1.0	87 in-lb	S
Crankcase Bearing Retainer Bolts	9.8	1.0	87 in-lb	L
Camshaft Chain Guide Bolts	9.8	1.0	87 in-lb	L
Crankcase Oil Nozzle	3.4	0.35	30 in-lb	
Connecting Rod Big End Nuts	59	6.0	43	EO
Oil Pressure Relief Valve	15	1.5	11.0	L
Oil Hose Banjo Bolts	9.8	1.0	87 in-lb	
Primary Gear Bolt	145	15.0	110	EO
Water Pump Chain Guide Spring Hook Bolt	2.9	0.30	26 in-lb	
Water Pump Chain Guide Bolts	9.8	1.0	87 in-lb	L
Water Pump Chain Guide Holder Bolts	9.8	1.0	87 in-lb	
Oil Pressure Switch Terminal Bolt	1.5	0.15	13 in-lb	
Oil Pressure Switch	15	1.5	11.0	SS
Oil Pipe Clamp Bolts (inside)	9.8	1.0	87 in-lb	L
Balancer Gear Bolt	85	8.7	63	EO

Fastener	Torque			Remarks
	N-m	kg-m	ft-lb	
Starter Motor Clutch Bolt	85	8.7	63	EO
Starter Motor Clutch Coupling Bolts	15	1.5	11.0	L
Gear Positioning Lever Bolt	9.8	1.0	87 in-lb	
Shift Shaft Return Spring Pin (Bolt)	20	2.0	14.5	L
Shift Pedal Clamp Bolts	9.8	1.0	87 in-lb	
Shift Lever Clamp Bolts	9.8	1.0	87 in-lb	
Shift Rod Locknuts	9.8	1.0	87 in-lb	(Rear: Lh)
Shift Drum Bearing Holder Bolts	9.8	1.0	87 in-lb	L
Shift Drum Cam Screw	–	–	–	L
Damper Cam Nut (Front Gear)	226	23.0	166	EO (threads)
Push Rod Guide Bolts	9.8	1.0	87 in-lb	L
Wheels/Tires:				
Front Axle Clamp Bolts	34	3.5	25	S
Front Axle Nut	110	11.0	80	S
Rear Axle Nut	110	11.0	80	
Tire Air Valve Nuts	1.5	0.15	13 in-lb	
Spoke Nipples	3.9	0.4	35 in-lb	
Final Drive:				
Oil Pipe Banjo Bolts	12	1.2	104 in-lb	
Oil Nozzle (Front Gear)	2.9	0.30	26 in-lb	
Oil Plug (Front Gear)	18	1.8	13.0	
Neutral Switch	15	1.5	11.0	
Front Gear Case Bolts: 6 mm	9.8	1.0	87 in-lb	
8 mm	25	2.5	18.0	
Damper Cam Nut (Front Gear)	226	23.0	166	EO (threads)
Drive Gear Nut (Front Gear)	265	27.0	195	EO, St
Driven Gear Assembly Mounting Bolts	25	2.5	18.0	
Driven Gear Bolt (Front Gear)	135	14.0	100	EO, St
Bearing Retainer Bolts (Front Gear)	8.8	0.90	78 in-lb	
Final Gear Case Drain Plug	8.8	0.90	78 in-lb	
Final Gear Case Mounting Nuts	29	3.0	22	
Final Gear Case Studs	–	–	–	L
Final Gear Case Cover Bolts: 8 mm	23	2.3	16.5	
10 mm	34	3.5	25	
Pinion Gear Nut (Final Gear)	120	12.0	87	St, O
Pinion Bearing Retainer (Final Gear)	245	25.0	180	Lh
Retainer Stop Screw	16	1.6	11.5	L
Brakes:				
Caliper Bleed Valves	7.8	0.80	69 in-lb	
Brake Hose Banjo Bolts	25	2.5	18.0	
Brake Lever Pivot Bolt	1.0	0.10	9 in-lb	
Brake Lever Pivot Bolt Locknut	5.9	0.60	52 in-lb	
Front Brake Reservoir Cap Screws	1.5	0.15	13 in-lb	
Front Brake Light Switch Screws	1.2	0.12	10 in-lb	
Front Master Cylinder Clamp Bolts	8.8	0.90	78 in-lb	S
Front Caliper Mounting Bolts	34	3.5	25	
Rear Caliper Mounting Bolts	32	3.3	24	
Rear Caliper Holder Bolt	64	6.5	47	
Brake Disc Bolts	23	2.3	16.5	
Rear Master Cylinder Mounting Bolts	25	2.5	18.0	
Rear Master Cylinder Push Rod Locknut	18	1.8	13.0	
Brake Pedal Clamp Bolt	23	2.3	16.5	

Fastener	Torque			Remarks
	N-m	kg-m	ft-lb	
Suspension:				
Upper Front Fork Clamp Bolts	20	2.0	14.5	
Lower Front Fork Clamp Bolts	34	3.5	25	
Front Fork Lower Cover Bolts	7.4	0.75	65 in-lb	
Front Fork Cover Screws	4.4	0.45	39 in-lb	
Front Fork Bottom Allen Bolts	20	2.0	14.5	L
Front Axle Clamp Bolts	34	3.5	25	S
Rear Shock Absorber Nuts	34	3.5	25	
Swingarm Pivot Shaft	125	13.0	94	G
Steering:				
Steering Stem Head Bolt	44	4.5	33	
Steering Stem Locknut	Hand-tight or 4.9	Hand-tight or 0.50	Hand-tight or 43 in-lb	
Steering Stem Nut	Hand-tight or 4.9	Hand-tight or 0.50	Hand-tight or 43 in-lb	
Handlebar Clamp Bolts	34	3.5	25	S
Handle Holder Nuts	34	3.5	25	
Handlebar End Caps	–	–	–	Lh, L
Handlebar Switch Housing Screws	3.4	0.35	30 in-lb	
Upper Front Fork Clamp Bolts	20	2.0	14.5	
Lower Front Fork Clamp Bolts	34	3.5	25	
Front Fork Lower Cover Bolts	7.4	0.75	65 in-lb	
Front Fork Cover Screws	4.4	0.45	39 in-lb	
Frame:				
Front Fender Bolts	6.9	0.70	61 in-lb	
Downtube Bolts	44	4.5	33	
Front Footpeg Bolts	34	3.5	25	
Rear Footpeg Bracket Bolts	20	2.0	14.5	
Sidestand Bolts	44	4.5	33	
Electrical System:				
Spark Plugs	18	1.8	13.0	
Pickup Coil Screws	2.9	0.30	26 in-lb	
Alternator Outer Cover Bolts	12	1.2	104 in-lb	
Alternator Outer Cover Damper Bolts	9.8	1.0	87 in-lb	EO (tip)
Alternator Inner Cover Bolts	9.8	1.0	87 in-lb	
Alternator Rotor Bolt	59	6.0	43	EO
Alternator Stator Bolts	13	1.3	113 in-lb	L
Stator Lead Clamp Screw	9.8	1.0	87 in-lb	
Starter Motor Terminal Locknut	11	1.1	95 in-lb	
Starter Motor Terminal Nut	4.9	0.50	43 in-lb	
Starter Motor Assembly Bolts	4.9	0.50	43 in-lb	
Starter Motor Mounting Bolts	9.8	1.0	87 in-lb	
Headlight Body Mounting Screws (inside)	2.9	0.30	26 in-lb	L
Headlight Rim Screws	1.0	0.10	9 in-lb	
Handlebar Switch Housing Screws	3.4	0.35	30 in-lb	
Radiator Fan Switch	18	1.8	13.0	
Sidestand Switch Bolt	8.8	0.90	78 in-lb	L
Water Temperature Switch	7.8	0.80	69 in-lb	SS
Oil Pressure Switch Terminal Bolt	1.5	0.15	13 in-lb	
Oil Pressure Switch	15	1.5	11.0	SS
Neutral Switch	15	1.5	11.0	
Turn Signal Light Screws	1.0	0.10	9 in-lb	
Turn Signal Light Mounting Nuts	5.9	0.60	52 in-lb	

Special Tools and Sealant

Oil Pressure Gauge, 5 kg/cm²: 57001-125

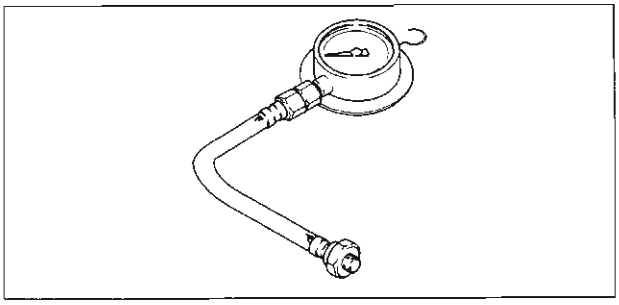

Steering Stem Bearing Driver: 57001-137

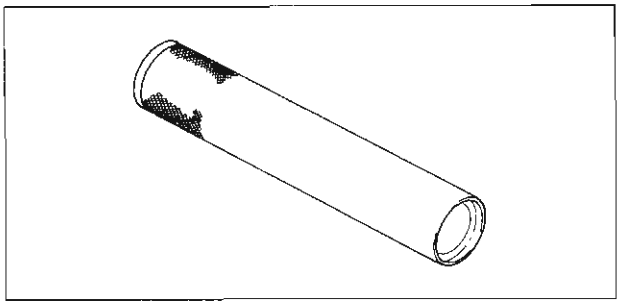

Inside Circlip Pliers: 57001-143

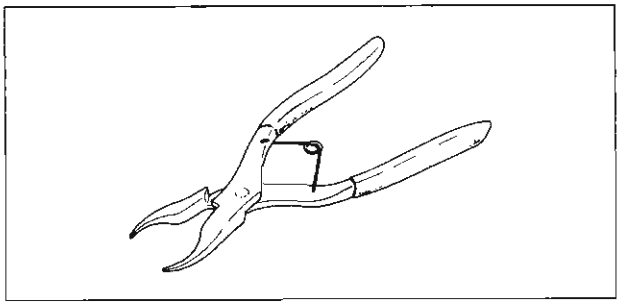

Outside Circlip Pliers: 57001-144

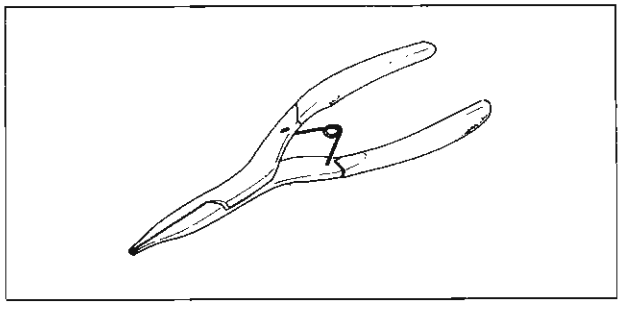

Bearing Puller: 57001-158

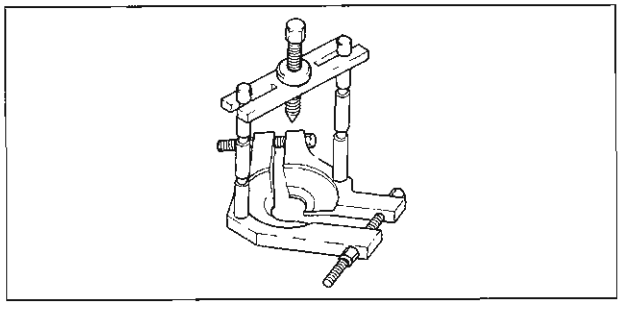

Valve Guide Reamer, Φ7: 57001-162

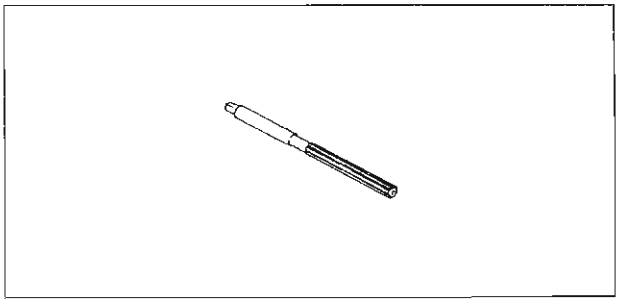

Valve Guide Arbor, Φ7: 57001-163

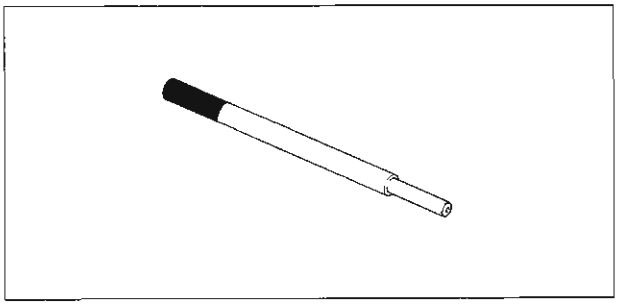

Fork Cylinder Holder Handle: 57001-183

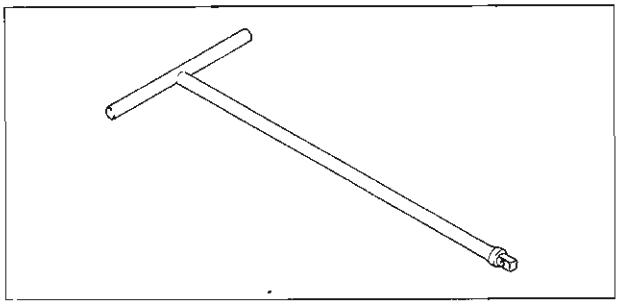

Compression Gauge: 57001-221

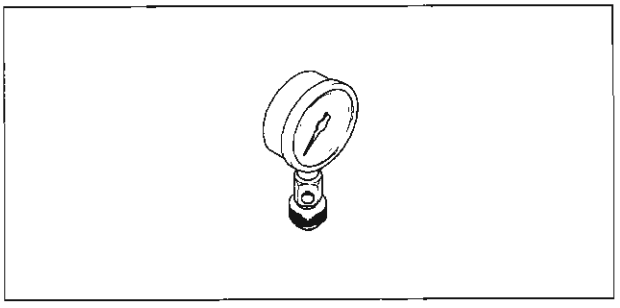

Valve Spring Compressor Assembly: 57001-241

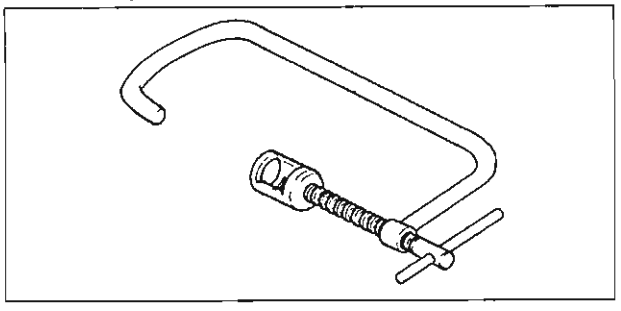

Valve Spring Compressor Adapter, Φ28.2: 57001-243

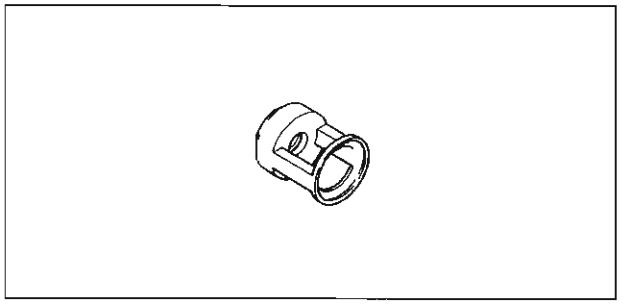

Fuel Level Gauge: 57001-1017

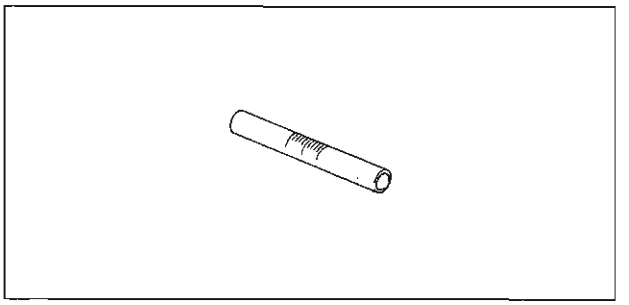

Bearing Puller Adapter: 57001-317

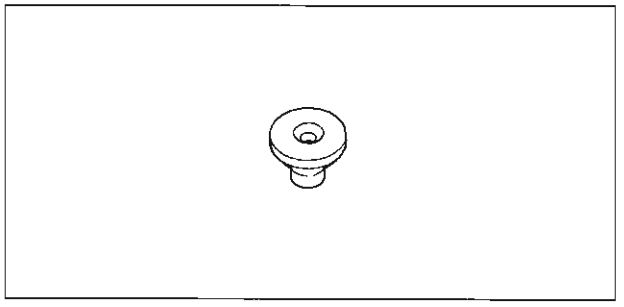

Compression Gauge Adapter, M12 x 1.25: 57001-1018

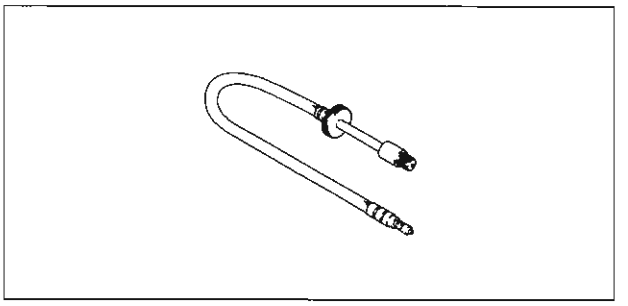

Bearing Driver: 57001-382

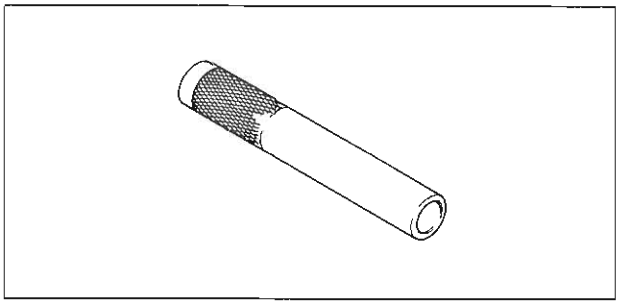

Spark Plug Wrench, Hex 18: 57001-1024

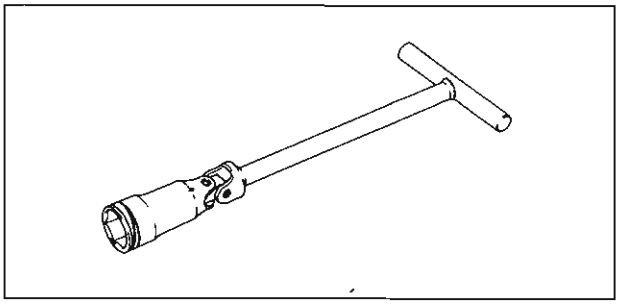

Piston Pin Puller Assembly: 57001-910

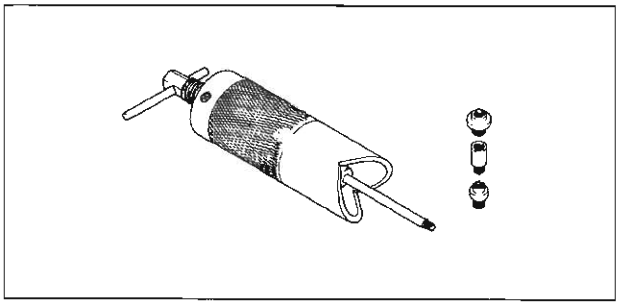

Damper Cam Holder: 57001-1025

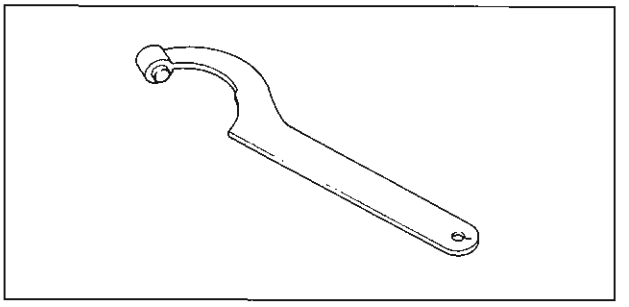

Gear Holder: 57001-1015

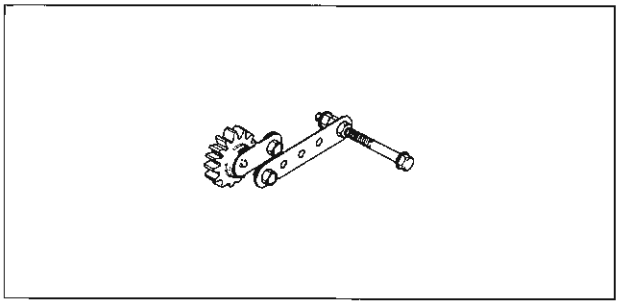

Driven Gear Holder: 57001-1027

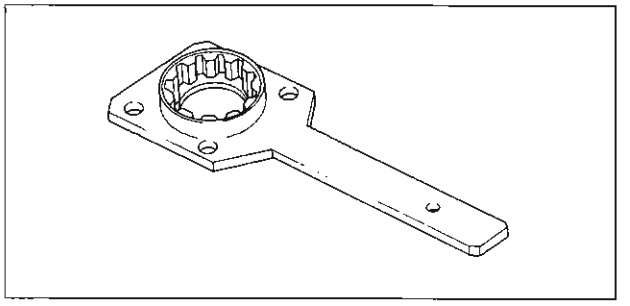

Oil Pressure Gauge Adapter, PT ⅛: 57001-1033

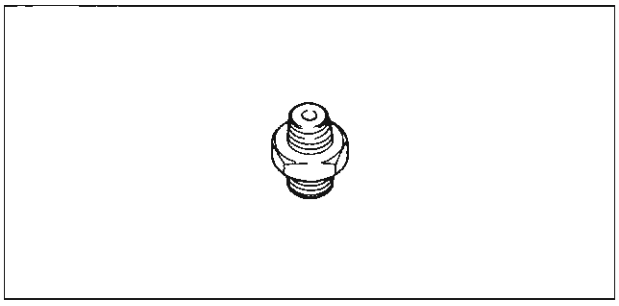

Fork Cylinder Holder Adapter: 57001-1057

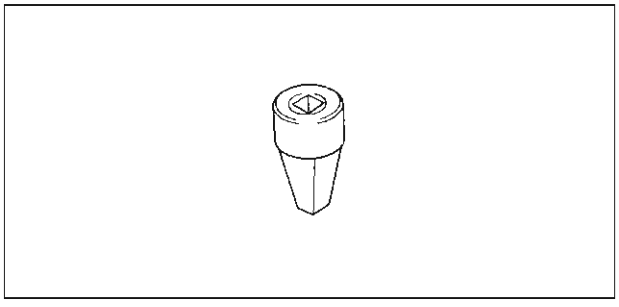

Oil Seal & Bearing Remover: 57001-1058

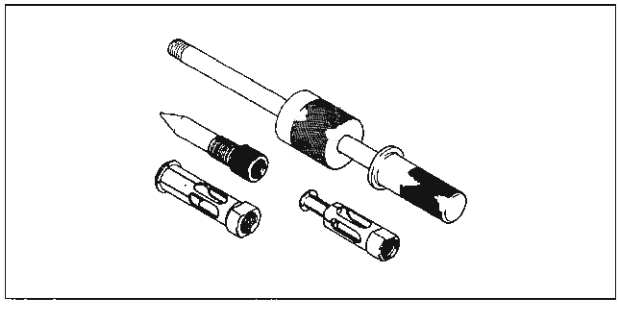

Rim Protector: 57001-1063

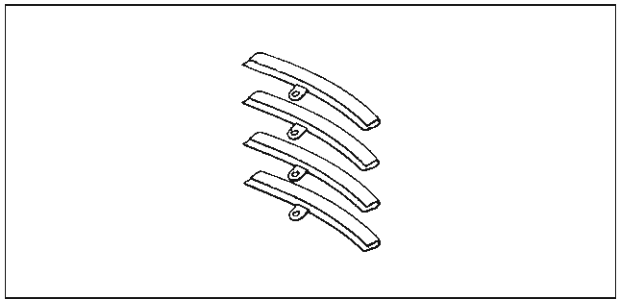

Bead Breaker Assembly: 57001-1072

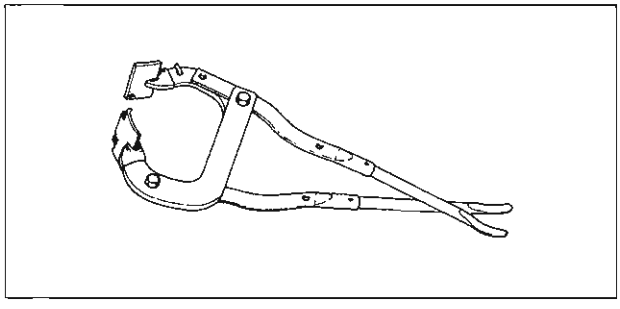

Steering Stem Bearing Driver Adapter: 57001-1074

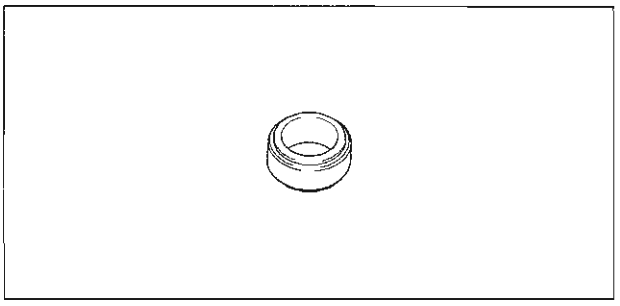

Head Pipe Outer Race Press Shaft: 57001-1075

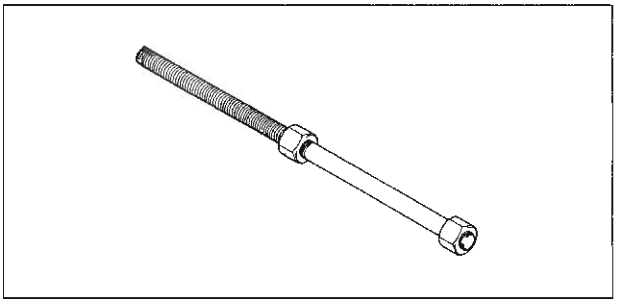

Head Pipe Outer Race Driver: 57001-1076

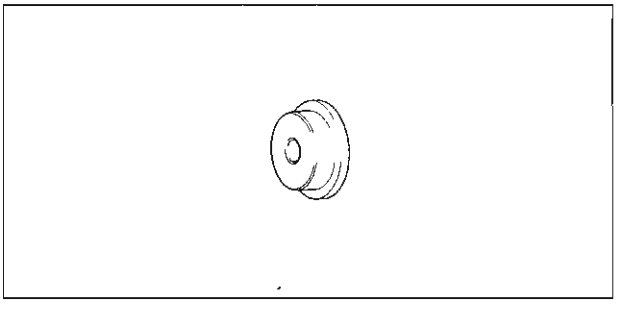

Piston Ring Compressor Grip: 57001-1095

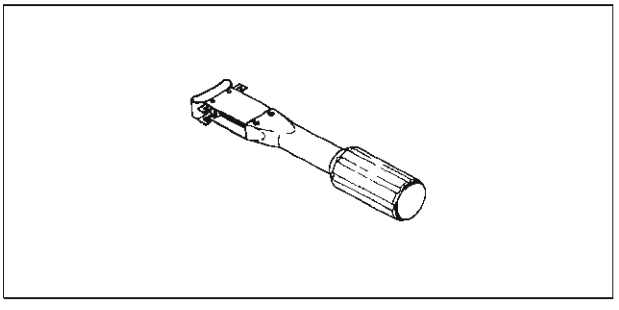

Steering Stem Nut Wrench: 57001-1100

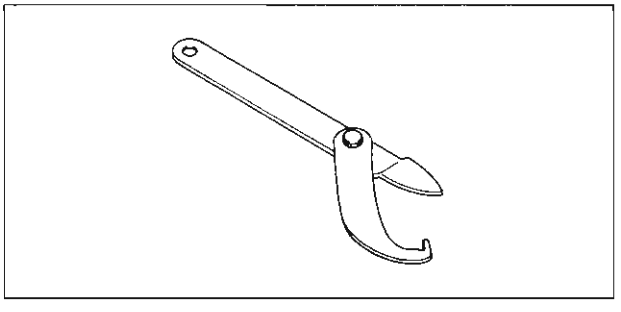

Fork Oil Seal Driver: 57001-1104

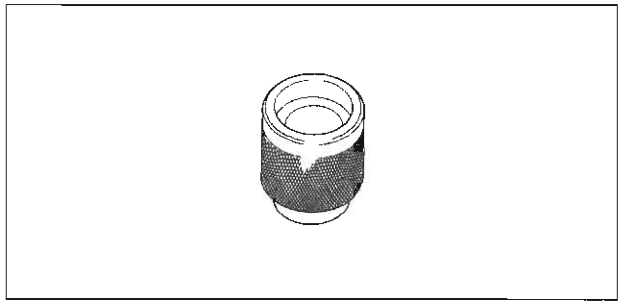

Head Pipe Outer Race Driver: 57001-1106

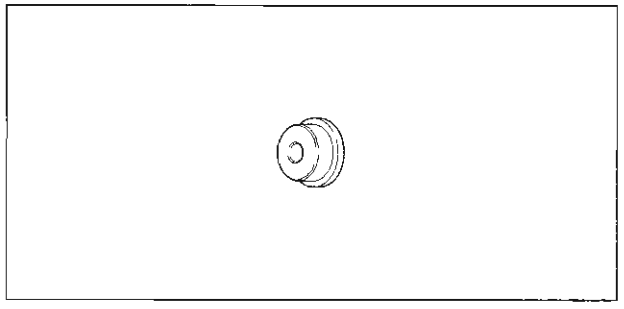

Head Pipe Outer Race Remover: 57001-1107

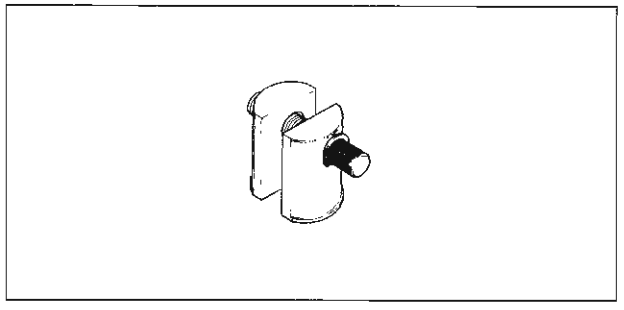

Valve Seat Cutter, 45° – Φ32: 57001-1115

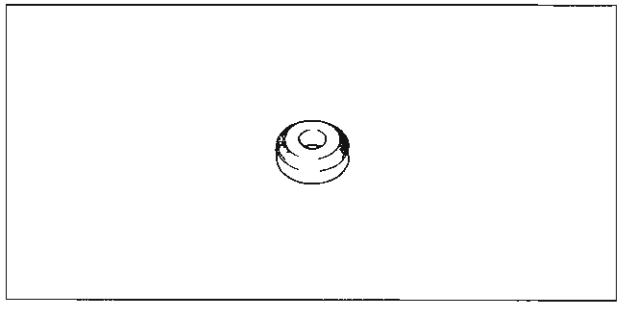

Valve Seat Cutter, 32° – Φ35: 57001-1121

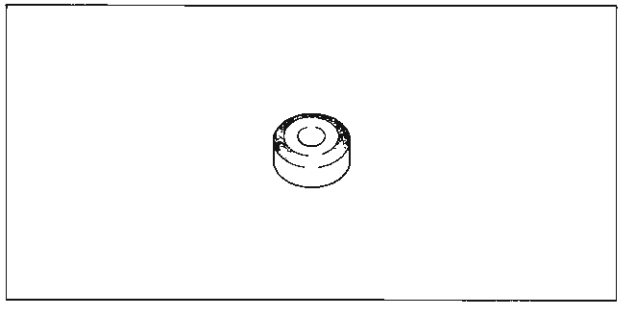

Valve Seat Cutter Holder, Φ7: 57001-1126

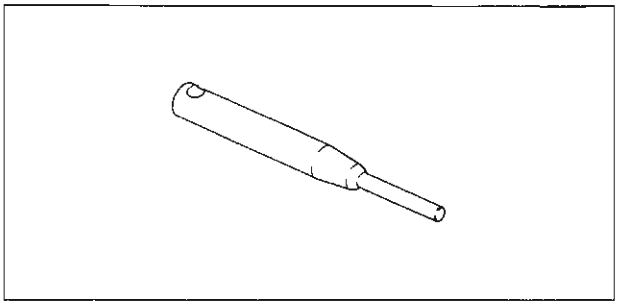

Valve Seat Cutter Holder Bar: 57001-1128

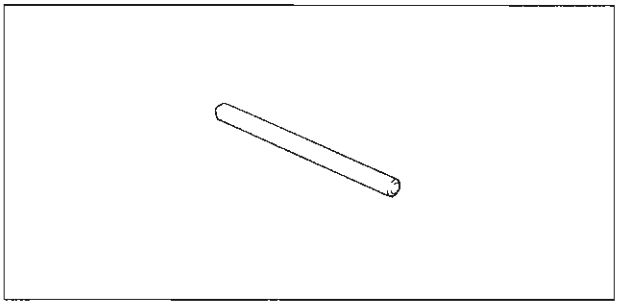

Bearing Driver Set: 57001-1129

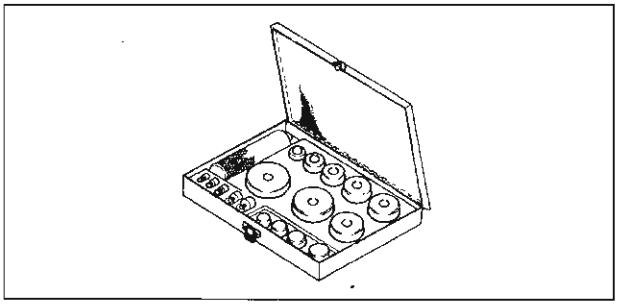

Pinion Gear Holder: 57001-1165

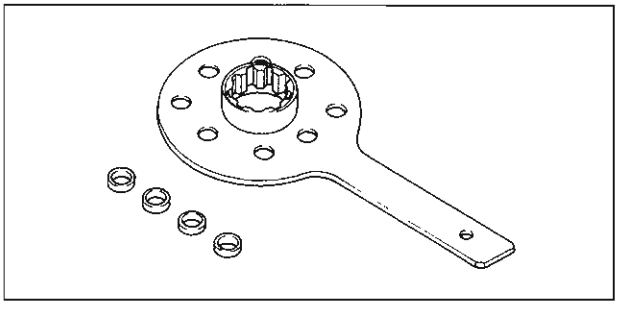

Hexagon Wrench, Hex 27: 57001-1210

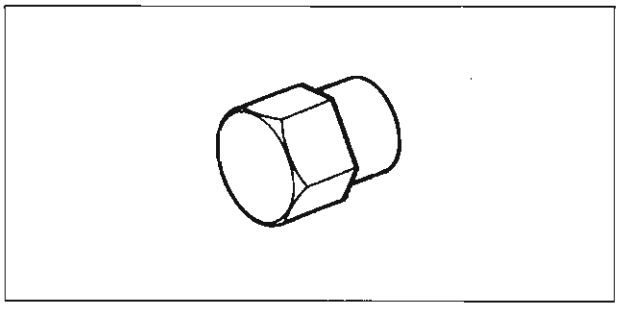

Fork Outer Tube Weight: 57001-1218

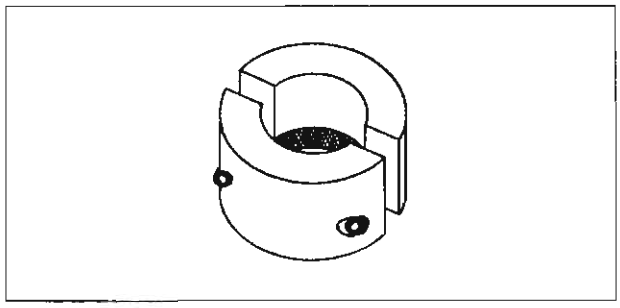

Front Fork Oil Seal Driver: 57001-1219

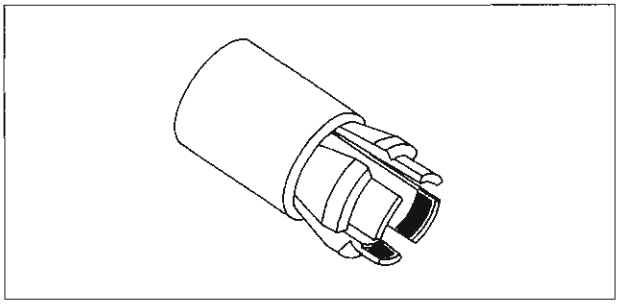

Drive Shaft Holder: 57001-1226

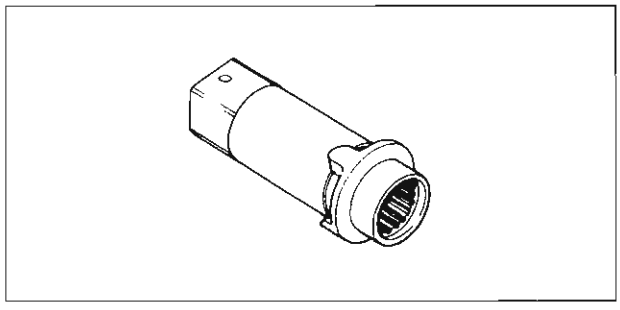

Jack: 57001-1238

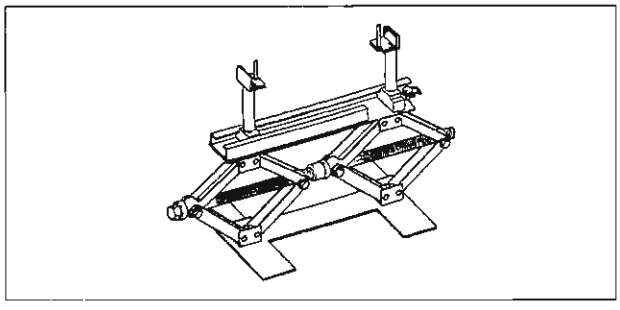

Timing Light: 57001-1241

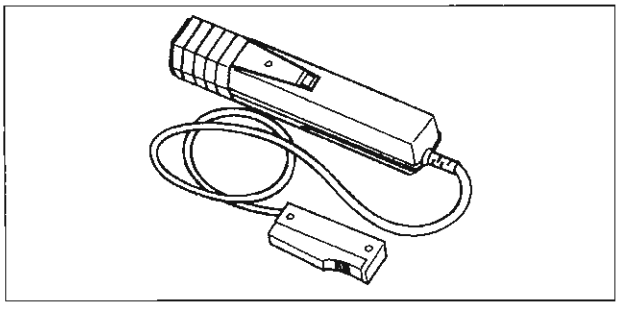

Valve Seat Cutter, 55° – Φ35: 57001-1247

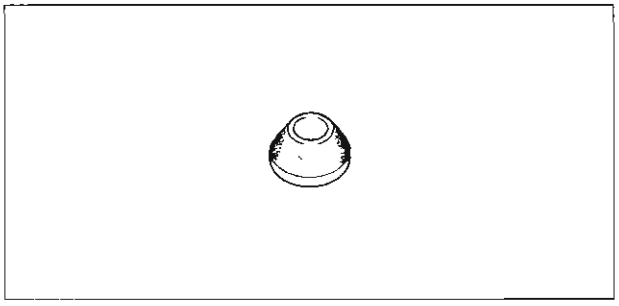

Oil Filter Wrench: 57001-1249

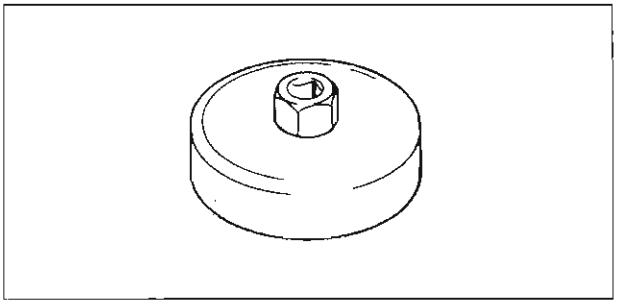

Final Gear Case Holder: 57001-1250

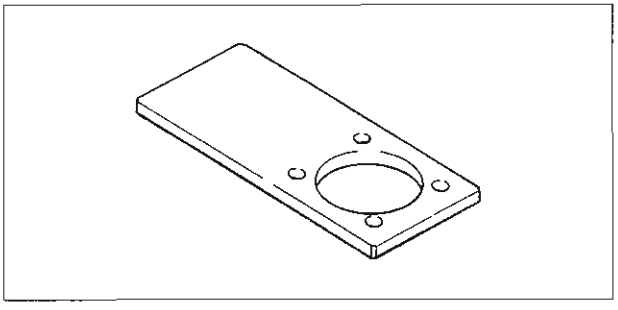

Bearing Retainer Wrench: 57001-1251

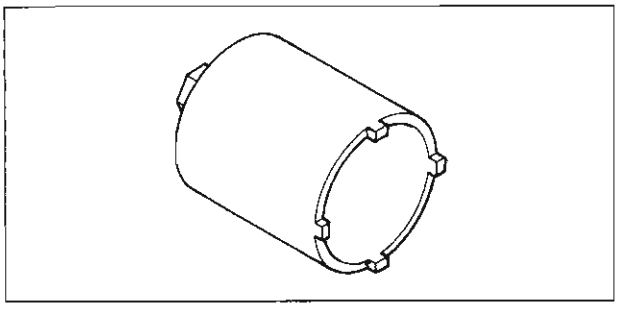

Bearing Remover Shaft: 57001-1265

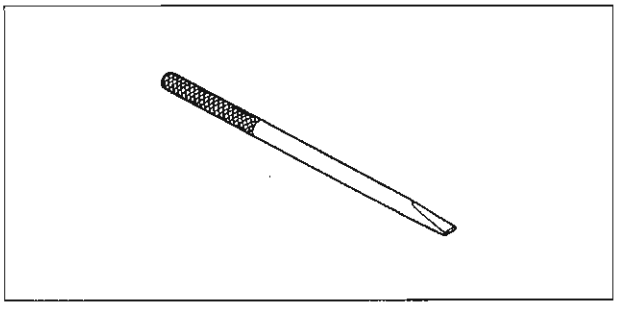

Bearing Remover Head, Φ10 x Φ12: 57001-1266

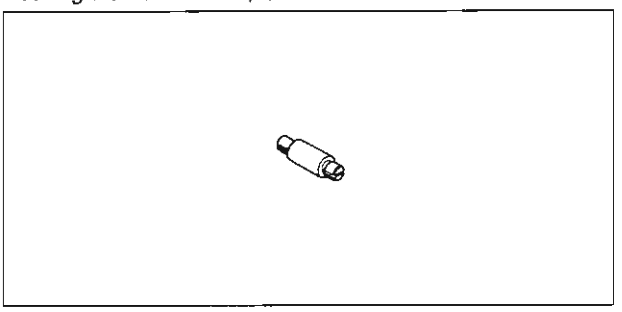

Flywheel Holder: 57001-1313

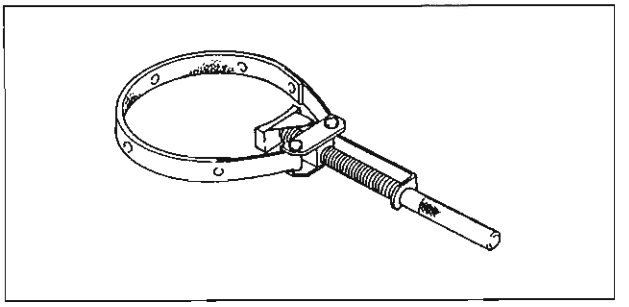

Carburetor Drain Plug Wrench, Hex 3: 57001-1269

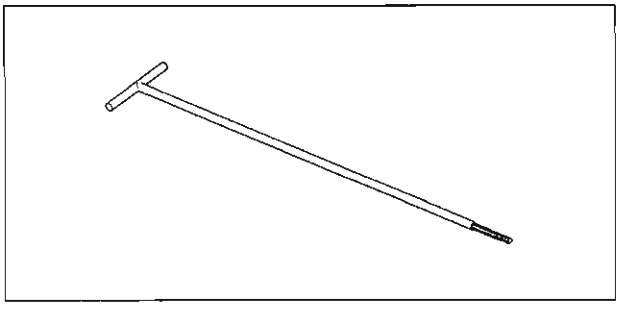

Piston Ring Compressor Belt, Φ95 ~ Φ108: 57001-1358

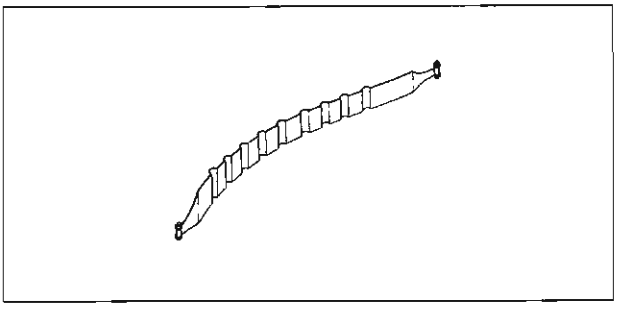

Fork Oil Level Gauge: 57001-1290

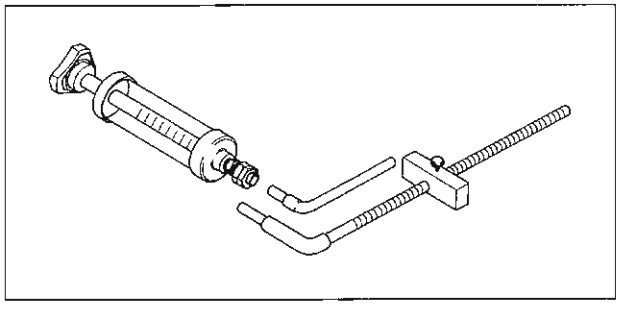

Vacuum Gauge: 57001-1369

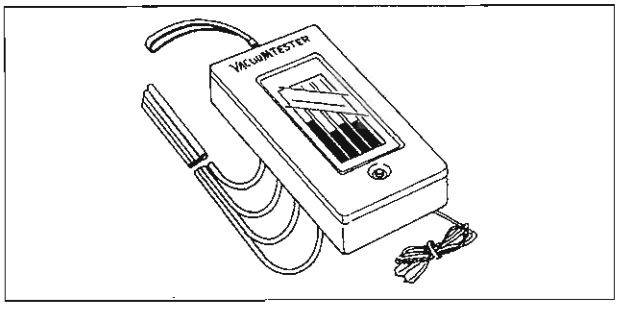

Pilot Screw Adjuster, C: 57001-1292

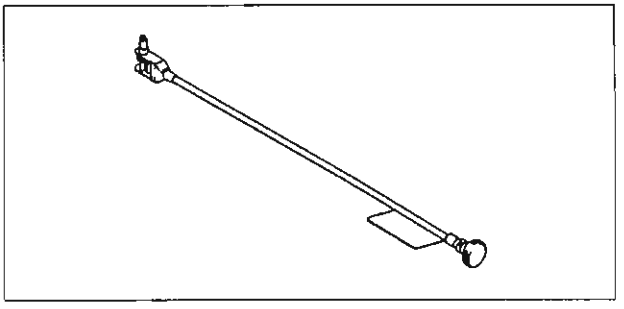

Bearing Remover Shaft: 57001-1377

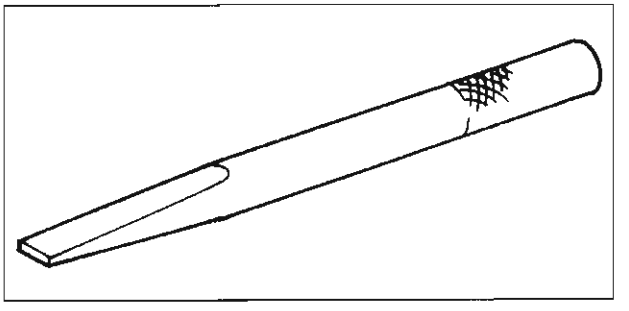

Bearing Remover Head, Φ20 x Φ22: 57001-1293

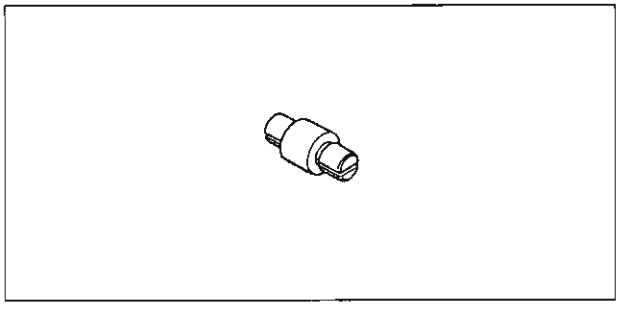

Igniter Checker: 57001-1378

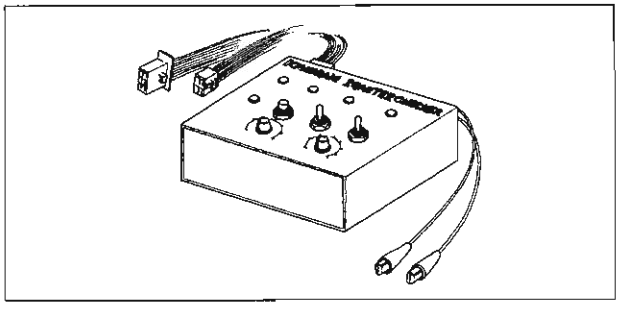

Hand Tester: 57001-1394

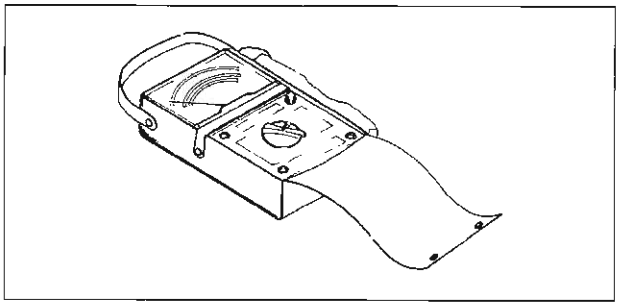

Harness Adapter #12: 57001-1397

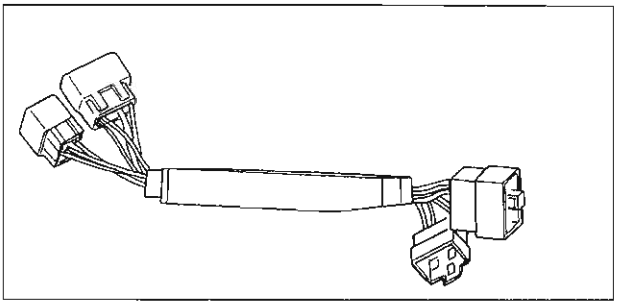

Attachment Jack: 57001-1398

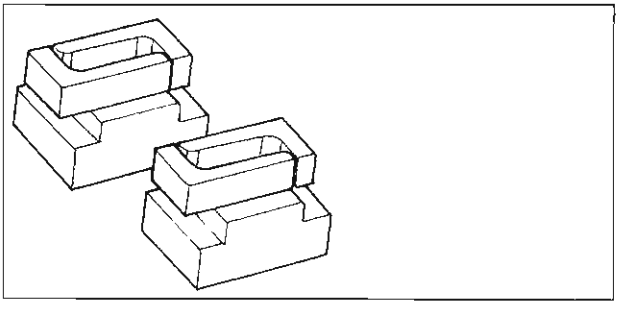

Pressure Cable Luber: K56019-021

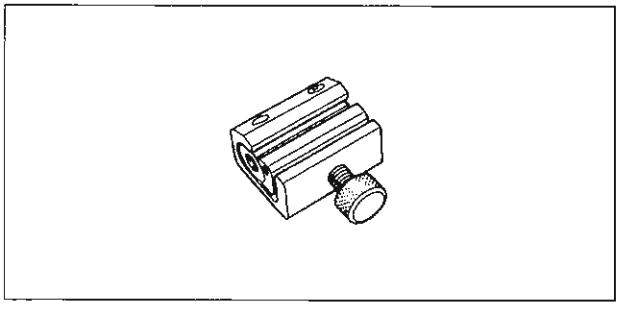

Kawasaki Bond (Silicone Sealant): 56019-120

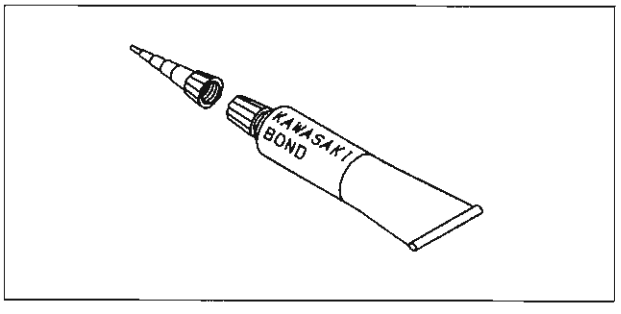

Kawasaki Bond (Liquid Gasket-Black): 92104-1003

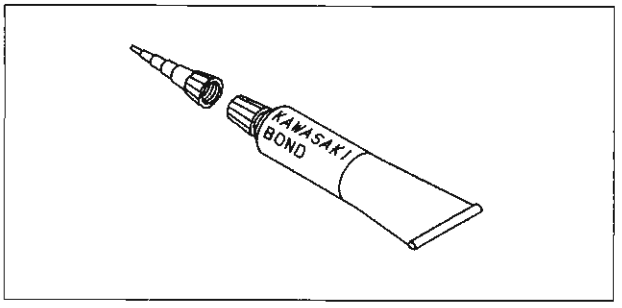

Cable, Wire, and Hose Routing

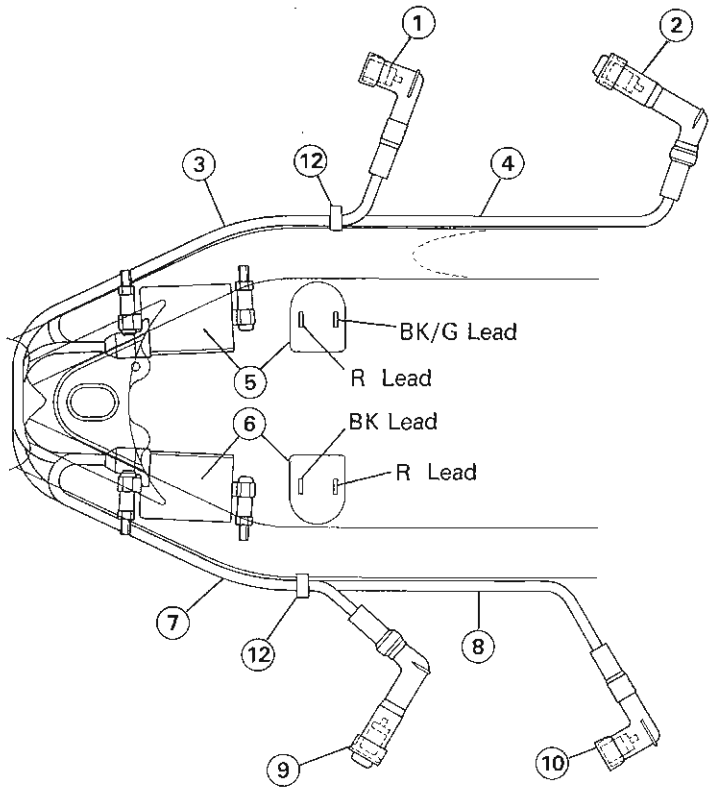

1. Front Right Spark Plug Cap
2. Rear Right Spark Plug Cap
3. Lead from the lower side of the left ignition coil
4. Lead from the lower side of the right ignition coil
5. Ignition Coil for Rear Spark Plugs
6. Ignition Coil for Front Spark Plugs
7. Lead from the upper side of the left ignition coil
8. Lead from the upper side of the right ignition coil
9. Front Left Spark Plug Cap
10. Rear Left Spark Plug Cap
11. Clutch Hose
12. Strap
13. Carburetor
14. Vent Hose
15. Choke Cable
16. Choke Knob

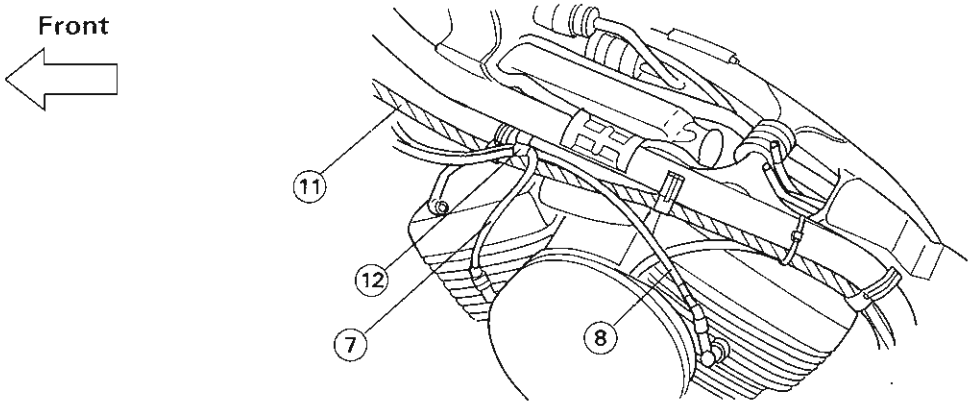

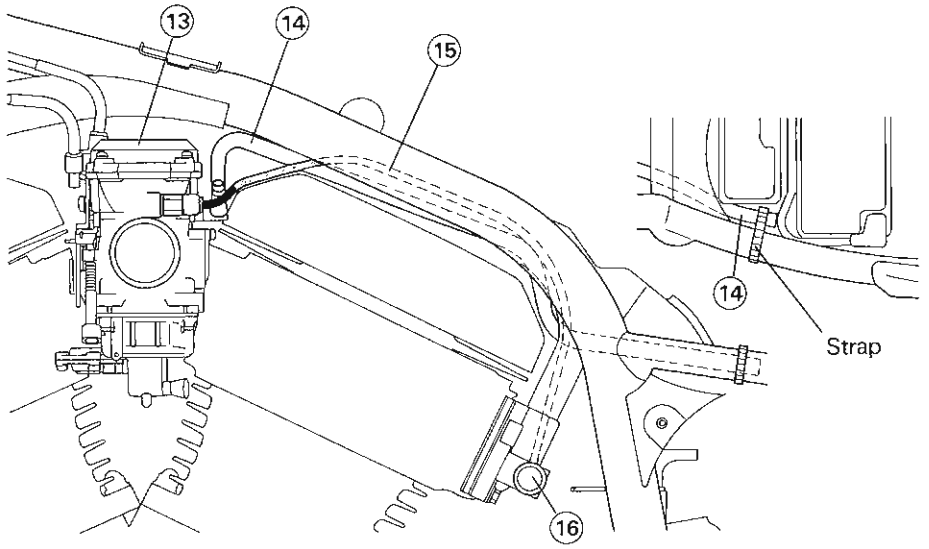

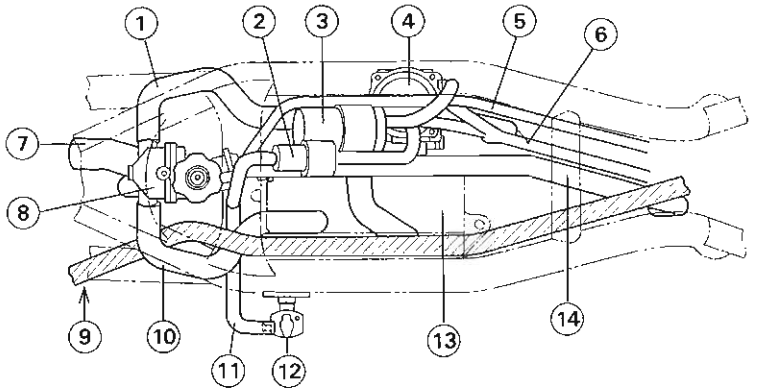

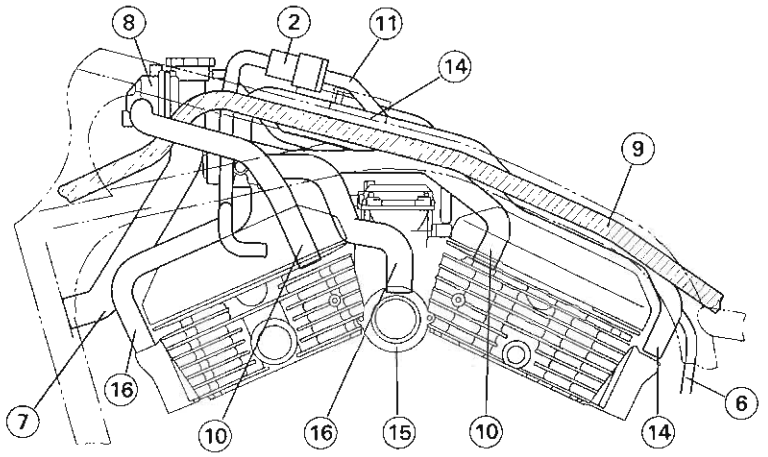

1. Water Hose
2. Fuel Filter
3. Fuel Pump
4. Carburetor
5. Water Hose (To the Reserve Tank)
6. Carburetor Vent Hose
   (Yellow, to the canister, CA)
7. Water Hose (To the radiator)
8. Thermostat Housing
9. Main Harness
10. Water Hose
    (To the front cylinder head)
11. Fuel Hose
12. Fuel Tap
13. Surge Tank
14. Vacuum Switch Hose
    (To the rear cylinder head)
15. Lower Air Cleaner Duct
16. Vacuum Switch Hose
17. The air hole faces downward.
18. White Mark
19. Clamp
20. Fuel Tank
21. Vacuum Switch Valve

Front

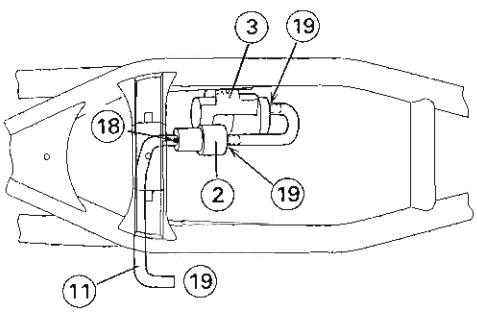

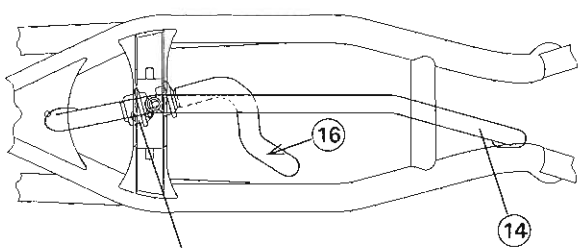

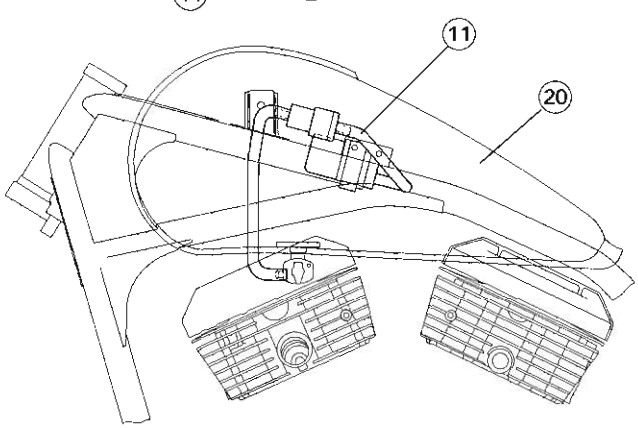

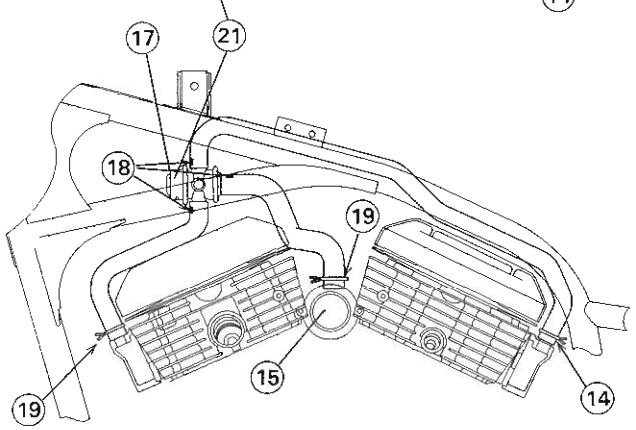

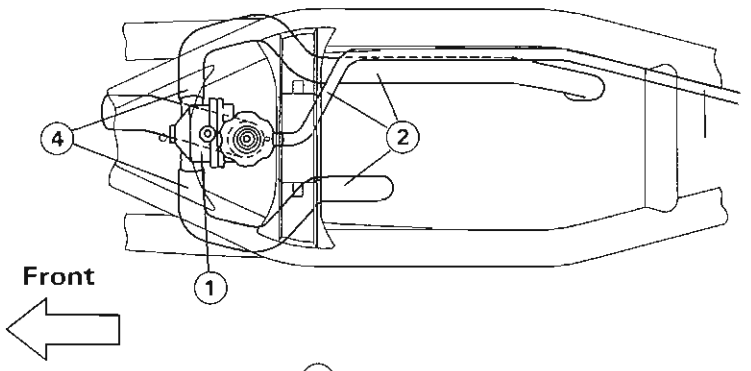

1. Thermostat Housing
2. Water Hose
3. To the reserve tank
4. Clamp
5. White Mark
6. Water Pump
7. Insert the hose until it touches the water pump inlet step.
8. Reserve Tank
9. Overflow Hose: Run the hose behind the reserve tank and between the igniter and the starter relay.
10. Run the hose inside the frame.
11. Run the hose through the clamp of the frame.
12. Insert the hose into the clamp on the rear side of the engine.

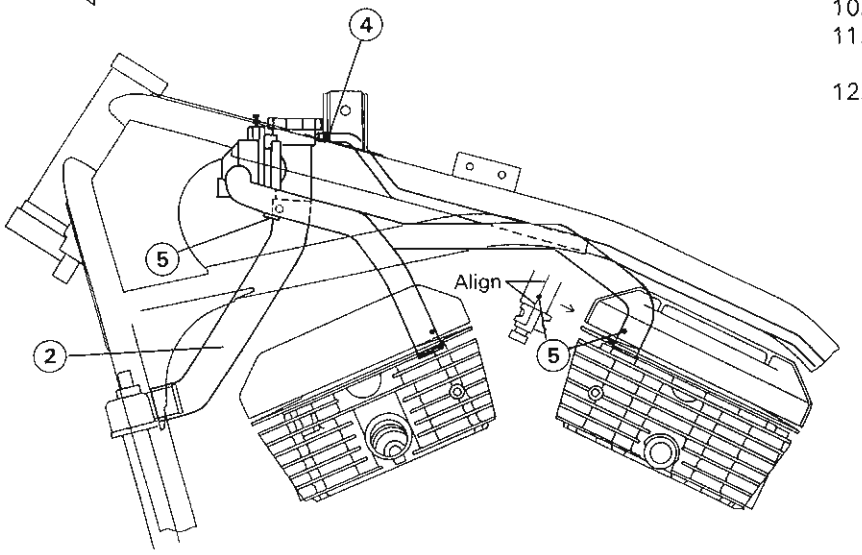

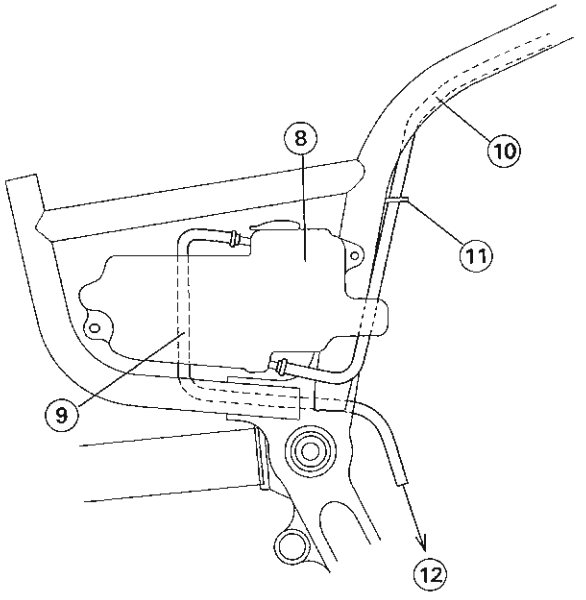

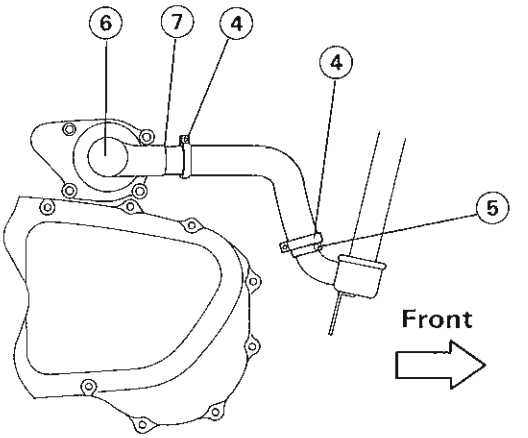

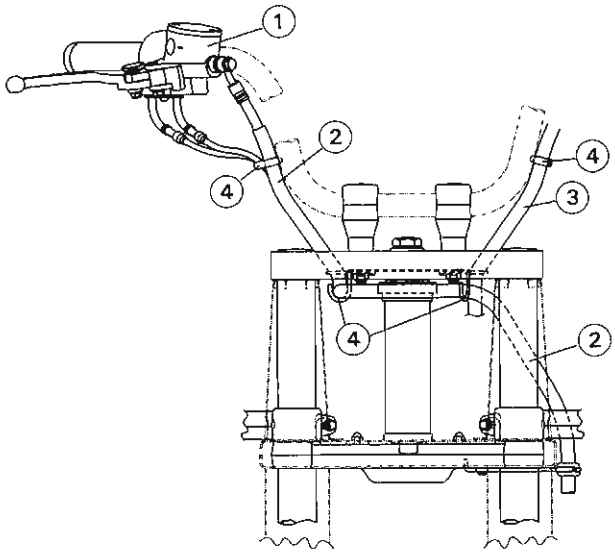

Front View

1. Front Master Cylinder
2. Front Brake Hose
3. Clutch Hose
4. Clamp
5. Front Caliper
6. Align the handlebar punch mark with the lower side of the mating surface.
7. To the speedometer
8. Speedometer Cable
9. Install the brake hose with its guide spring on the caliper side.
10. Install the speedometer gear on the right side of the wheel.
11. Run the speedometer cable through the clamp on the front fender.

Front

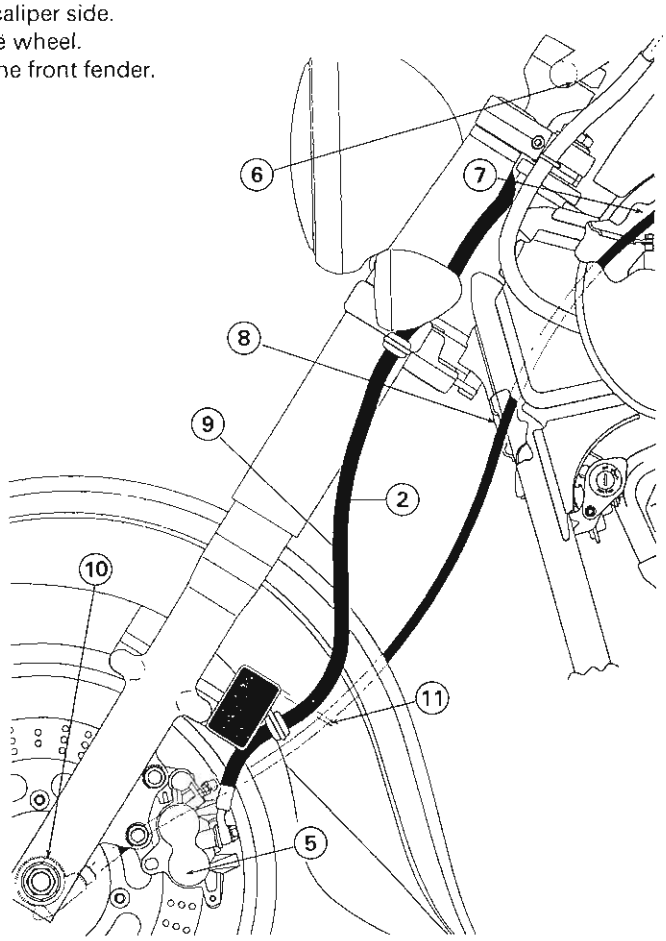

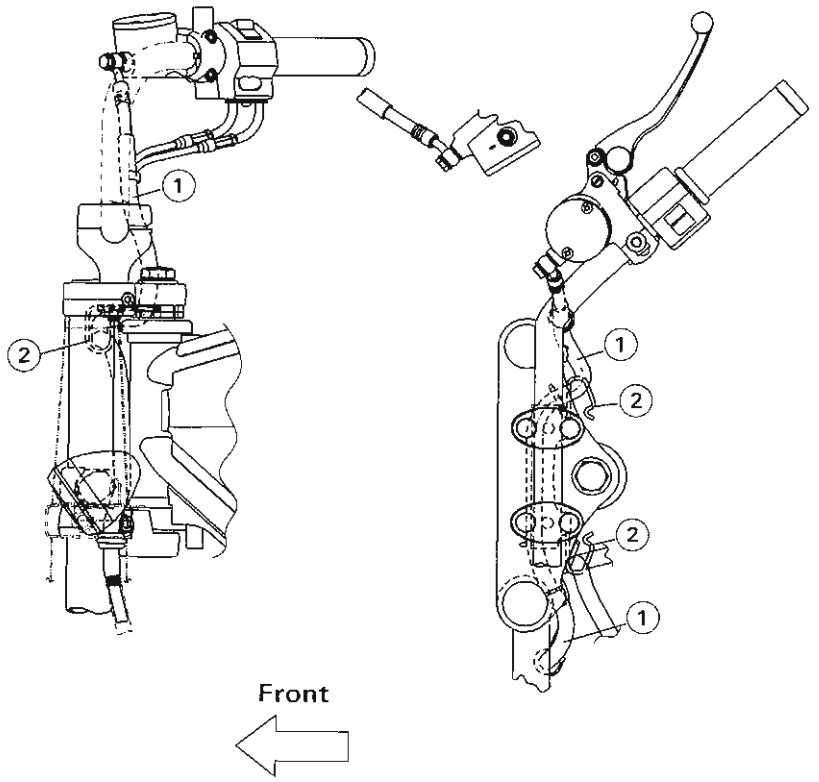

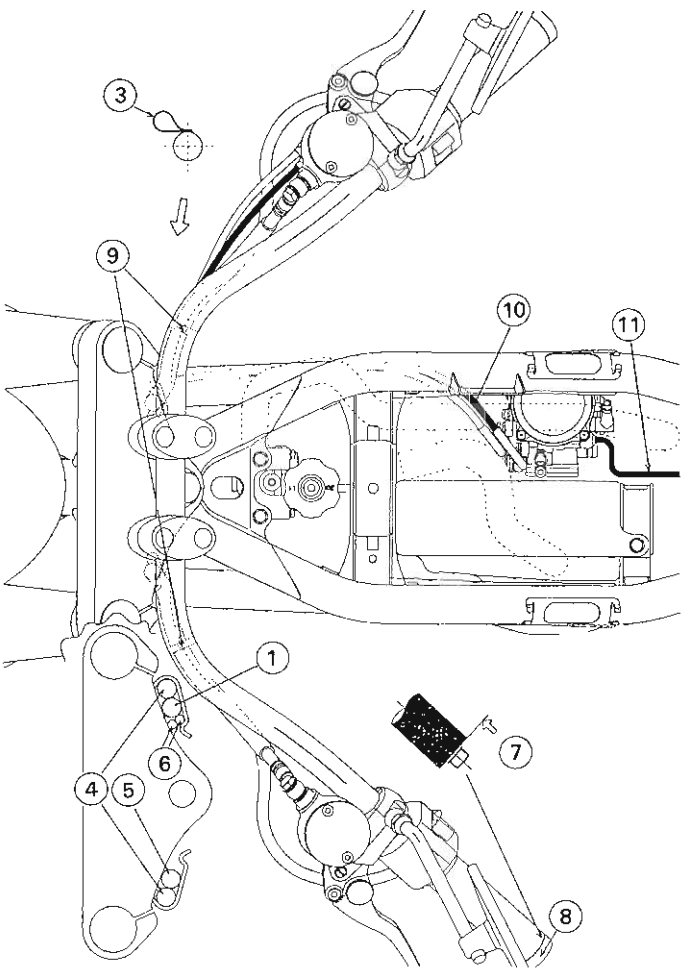

1. Front Brake Hose
2. Clamp
3. Clamp
4. Handlebar Switch Leads
5. Clutch Hose
6. Throttle Cables
7. Grip End
8. Apply adhesive to the grip end cap and screw in the cap counterclockwise.
9. Clamp the clutch hose(left), brake hose(right), and the handlebar switch leads.
10. Run the throttle cables above the water hose.
11. Run the choke cable on the right side of the surge tank as near as possible over the vacuum switch hose, water hose and carburetor hoses.

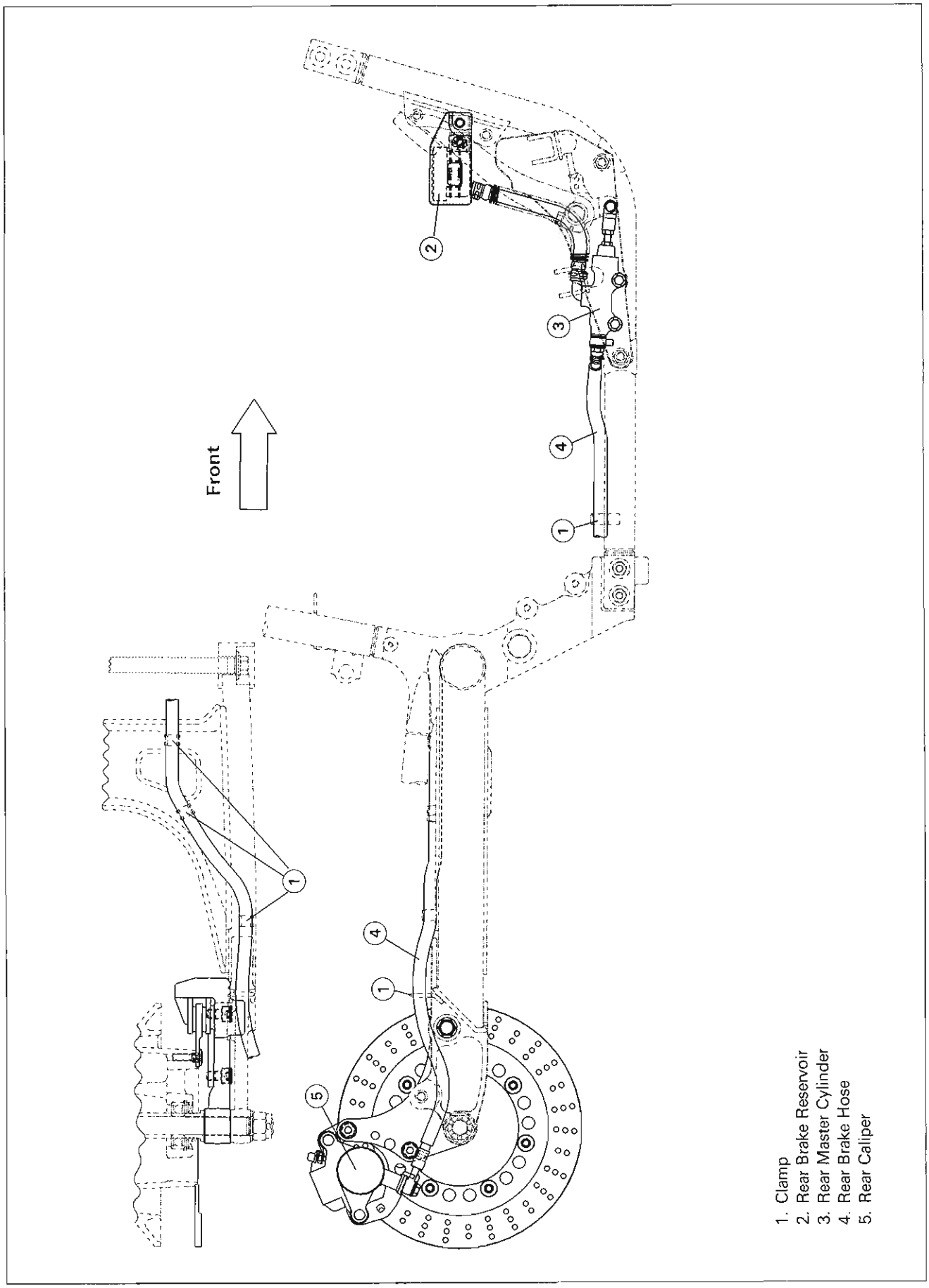

1. Clamp
2. Rear Brake Reservoir
3. Rear Master Cylinder
4. Rear Brake Hose
5. Rear Caliper

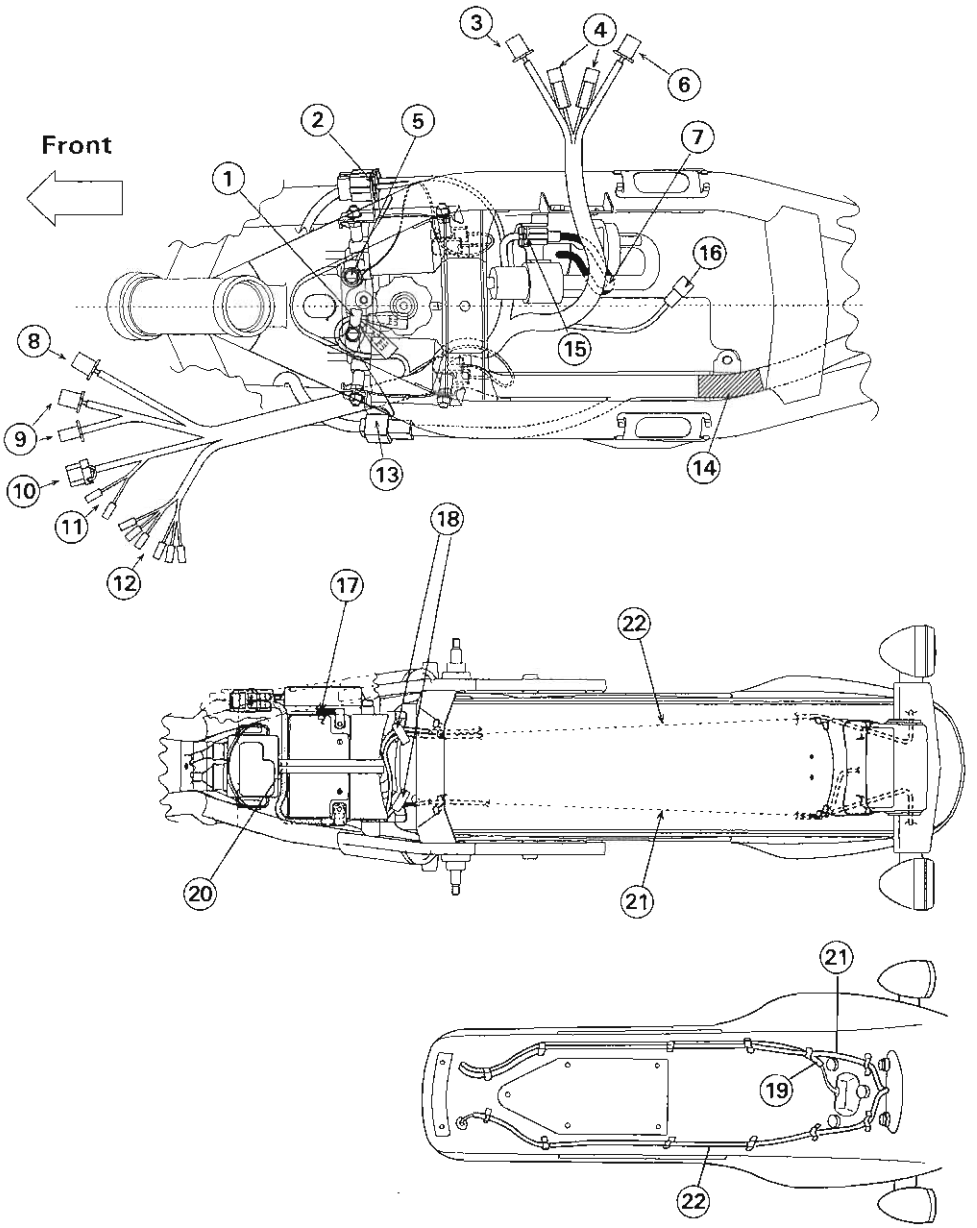

1. Clamp the accessory leads with their connectors backward.
2. Radiator 3-Pin Connector (upper) and Rear Brake Light Switch 2-Pin Connector (lower)
3. To speedometer (white connector)
4. To regulator/rectifier
5. Chassis Ground Terminal
6. To meter indicator light (black connector)
7. Run the yellow lead of the fuel pump under the fuel hose.
8. To the right handlebar switch
9. To the left handlebar switch
10. To the headlight
11. To the city light (other than US, AS)
12. To the turn signal light (left: green, right: gray leads) US: 3 leads each, Other: 2 leads each
13. Ignition Switch Connector with the main harness side fitted in the clamp
14. White Mark: Position here.
15. Fuel Pump Connector: Connect it with the fuel pump bracket inserted between.
16. Fuel Sensor Connector
17. To the engine ground terminal
18. Clamps tightened with rear fender bolts hold the tail/brake light and turn signal leads.
19. Leads for the license light (except US) and the tail/brake light and turn signal leads.
20. Battery Band (battery positive lead, accessary lead)
21. Left Turn Signal Lead
22. Right Turn Signal Lead

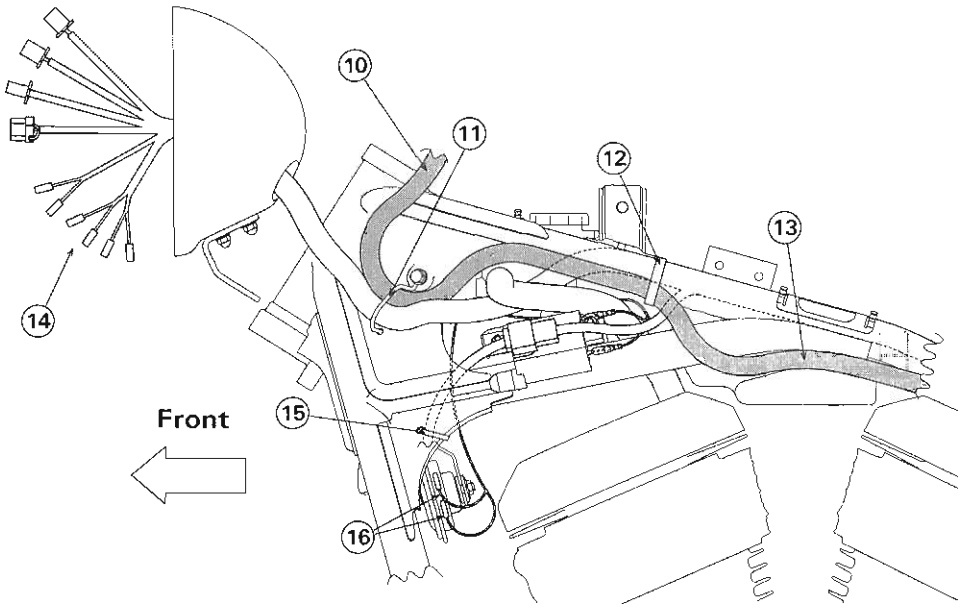

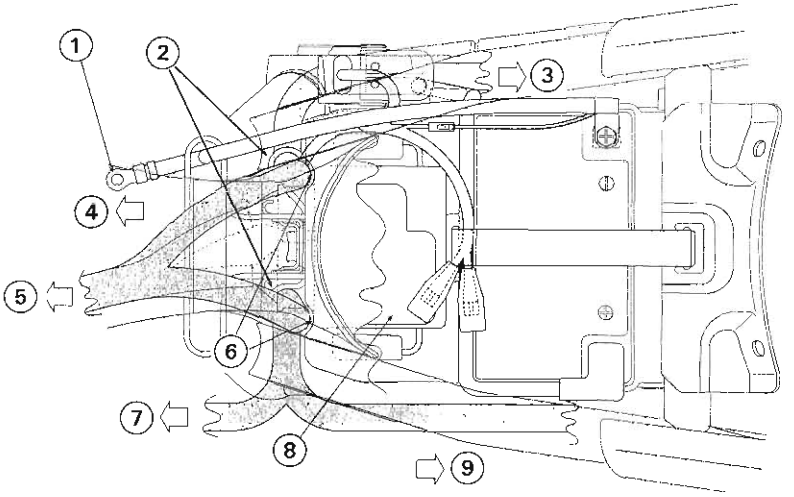

1. Battery Negative Lead
2. Run both harness into the bracket.
3. To the igniter and turn signals
4. To the engine ground
5. Front
6. Run the harness into the groove of the battery case.
7. Into the alternator outer cover
8. Junction Box
9. To the taillight and rear turn signals
10. Run the clutch hose through the left clamp under the bracket.
11. Clamp: Insert the clamp tip into the hole and hold the harness and clutch hose.
12. Wiring Strap
13. Run the clutch hose between the frame pipe and the air cleaner duct.
14. Connect all the connectors in the headlight body.
15. Clamp the ignition switch lead on the frame with a band.
16. Insert the horn terminals so that both leads hang down.

1. Run the throttle cables through the right clamp under the upper bracket.
2. Keep the clamp 3~8 mm away from the steering lock.
3. RH Ignition Coil
4. Radiator Fan Connector
5. Rear Brake Light Switch Connector
6. Right Horn Lead
7. Throttle Cables
8. Frame Pipe
9. Insert the horn terminals so that the horn leads hang down.
10. Wiring Strap (radiator fan motor lead and rear brake light switch lead)
11. Install the fuel level sensor with its harness facing inside the frame.
12. Run the fuel level sensor drain hose on the right side of the holder.
13. Clamp the hose on the right side of the frame pipe.
14. Run the hose in front of the cross pipe.
15. Clamp
16. Fuel Level Sensor Drain Hose
17. Coolant Reserve Tank Overflow Hose
18. Fuel Tank Breather Hose (except CA)
19. Clamp the fuel tank breather hose (except CA).
20. Fuel Tank Damper
21. Run the hose through the holder.

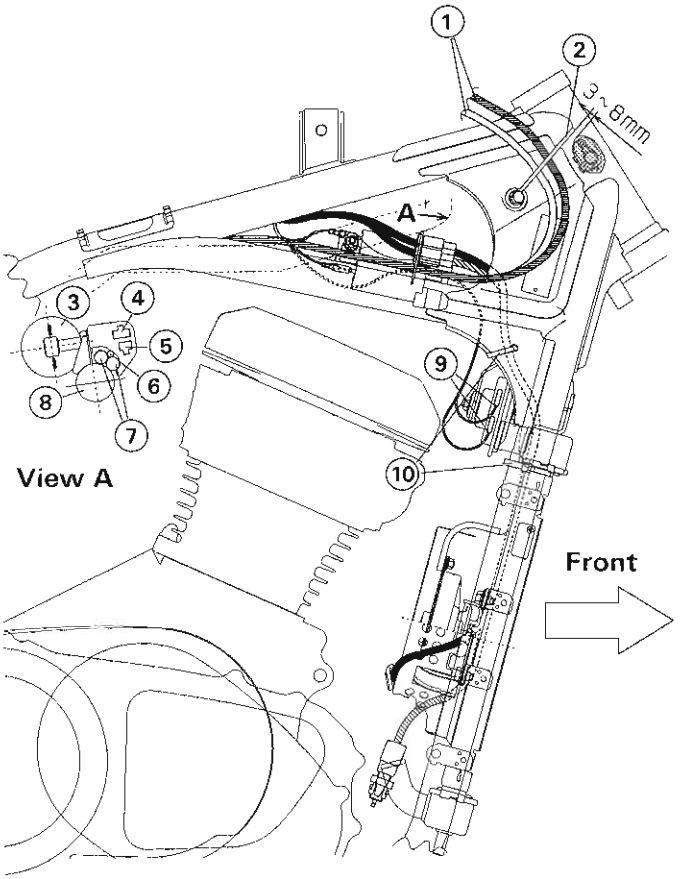

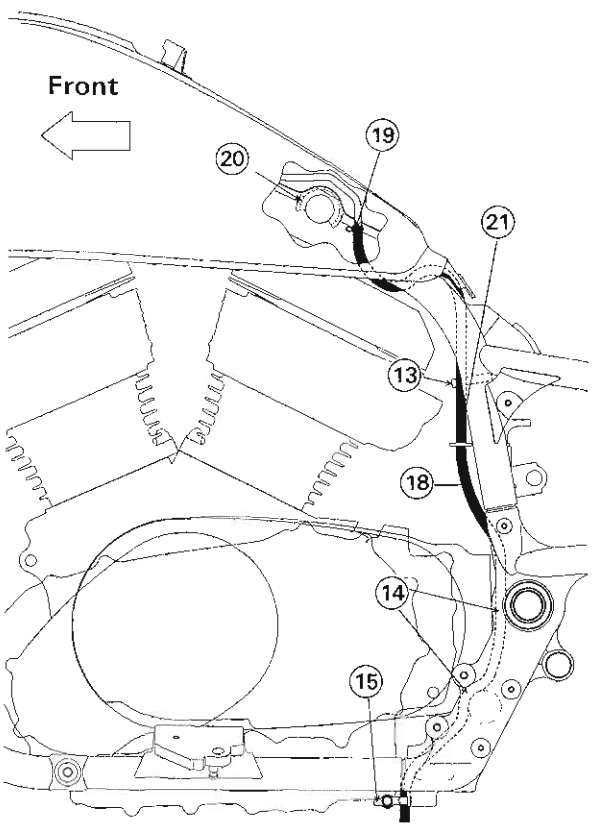

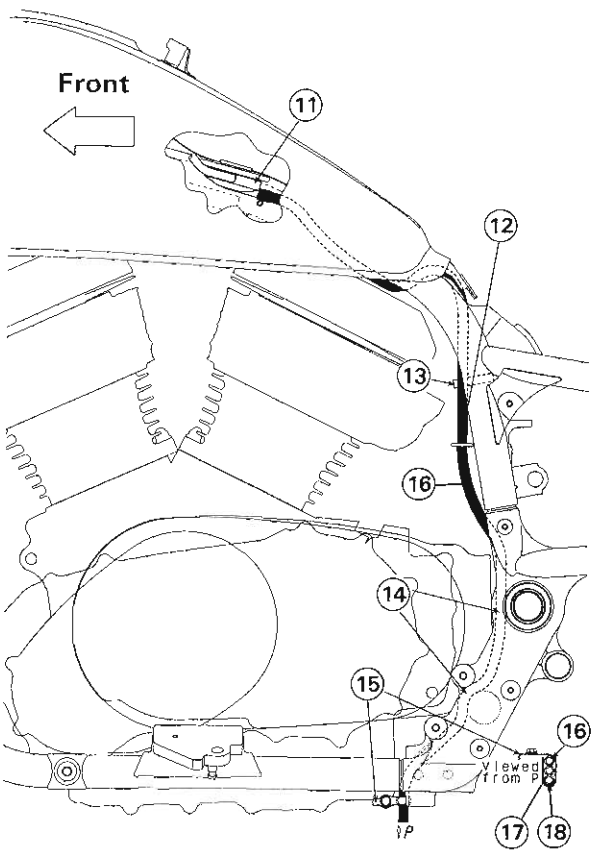

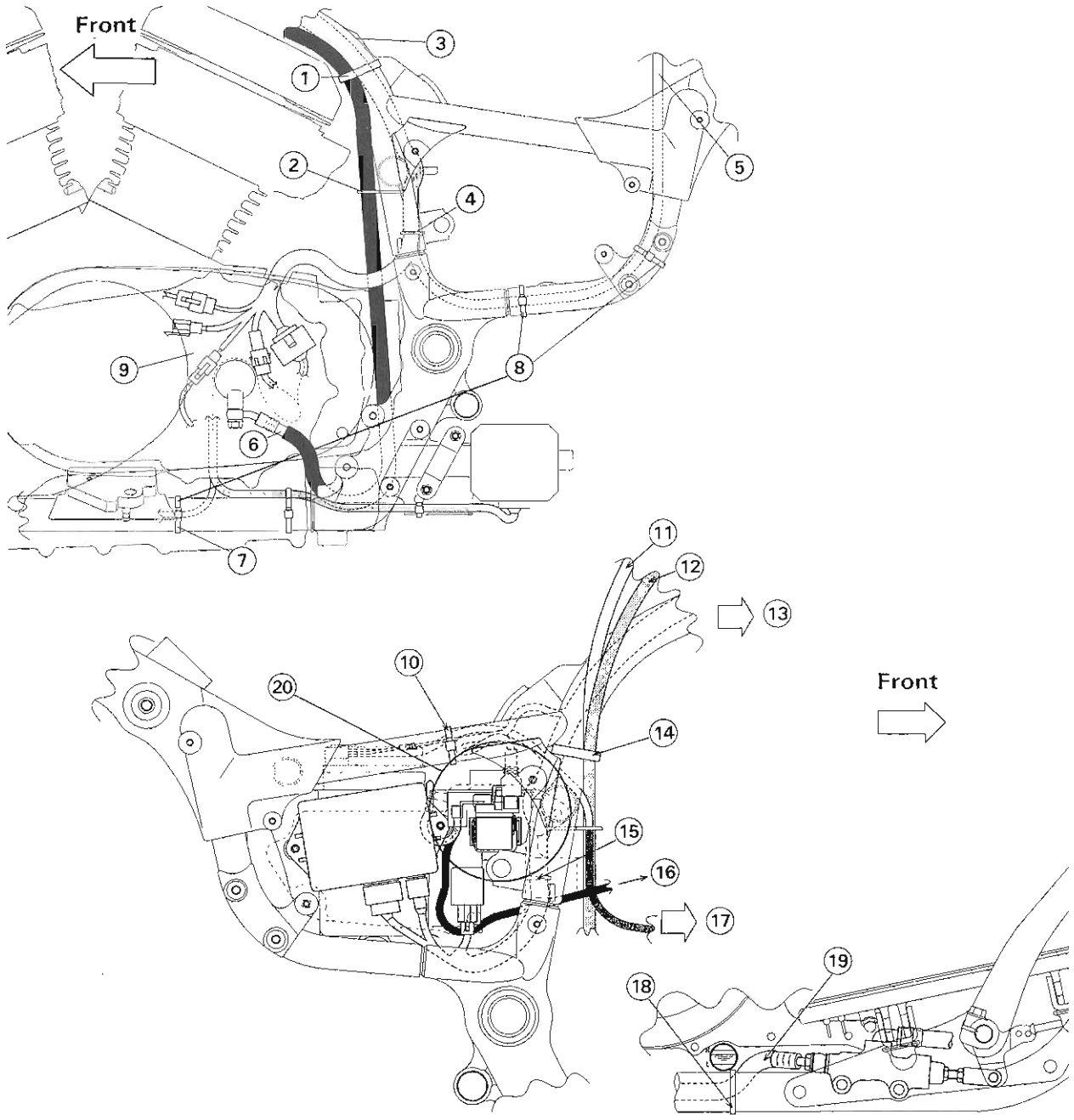

1. Clamp the clutch hose onto the frame pipe.
2. Upper Holder
3. Fit the strap tab of the harness into the fuel tank bracket.
4. Lower Holder
5. To the rear turn signals.
6. White Mark
7. Clamp the sidestand switch leads with a slack as little as possible onto the frame pipe behind the sidestand bracket.
8. Wiring Straps
9. Refer to the next page for more detail.
10. Wiring Strap (battery negative lead and main harness)
11. Fuel Tank Breather Hose
12. Fuel Level Sensor Drain Hose
13. Front
14. Secure two hoses on the frame pipe.
15. Run the main harness through both lower holders.
16. To the starter motor
17. To the engine ground
18. Wiring Strap: Secure the hose so that the oil level gauge is visible.
19. Rear Brake Hose
20. Be careful not to damage the leads by pinch between the battery case and the frame.

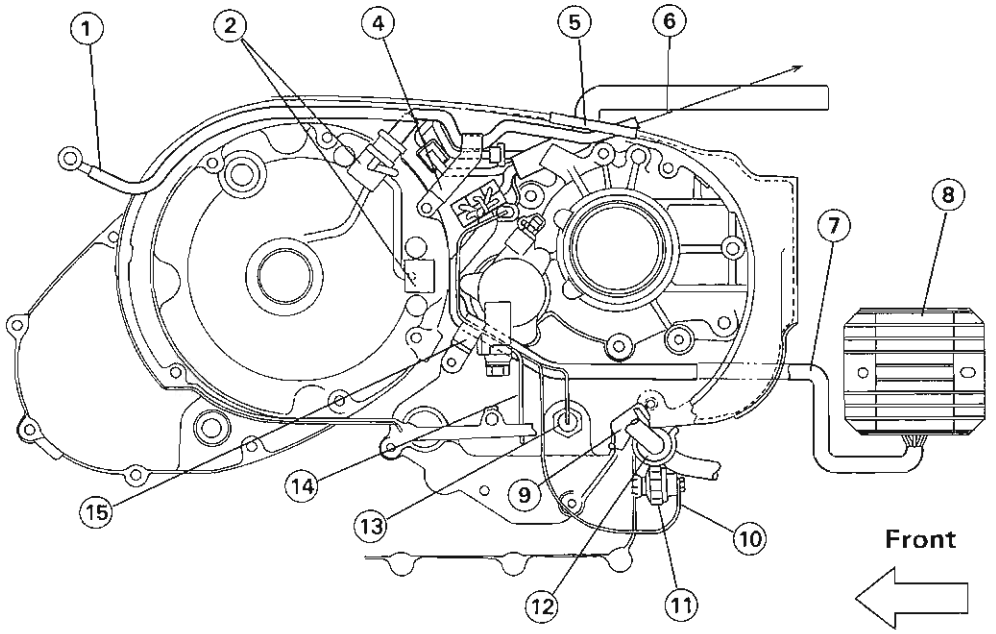

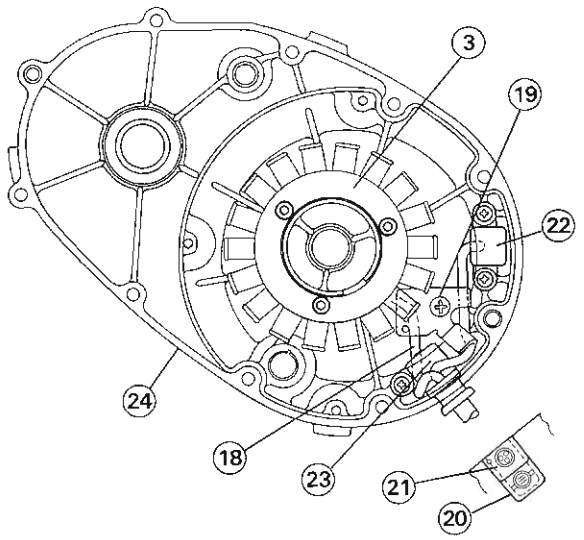

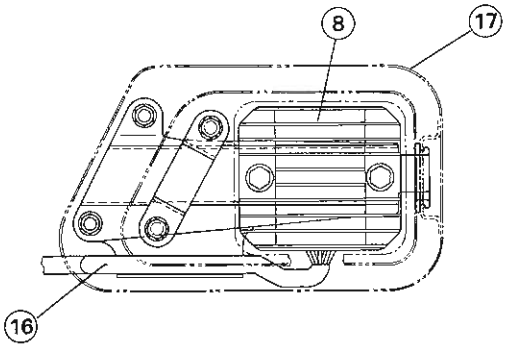

1. Starter Cable
2. Pickup Coil: Install the pickup coil inside the alternator inner cover.
3. Stator
4. Clamp
5. Trimming
6. To the starter relay: Pull the starter lead to this direction as much as possible.
7. Regulator/Rectifier Lead
8. Regulator/Rectifier
9. Holder
10. Oil Pressure Switch Lead
11. Oil Pressure Switch
12. Grommet
13. Neutral Switch
14. Sidestand Switch Lead
15. Clamp
16. Run the lead above the bracket.
17. Regulator/Rectifier Cover
18. Alternator Lead
19. Holder: Clamp the stator leads and the pickup coil leads.
20. Grommet for the stator lead
21. Grommet for the pickup coil lead
22. Pickup Coil (1) (front cylinder)
23. Pickup Coil (2) (rear cylinder)
24. Alternator Inner Cover

Evaporative Emission Control System (California model only)

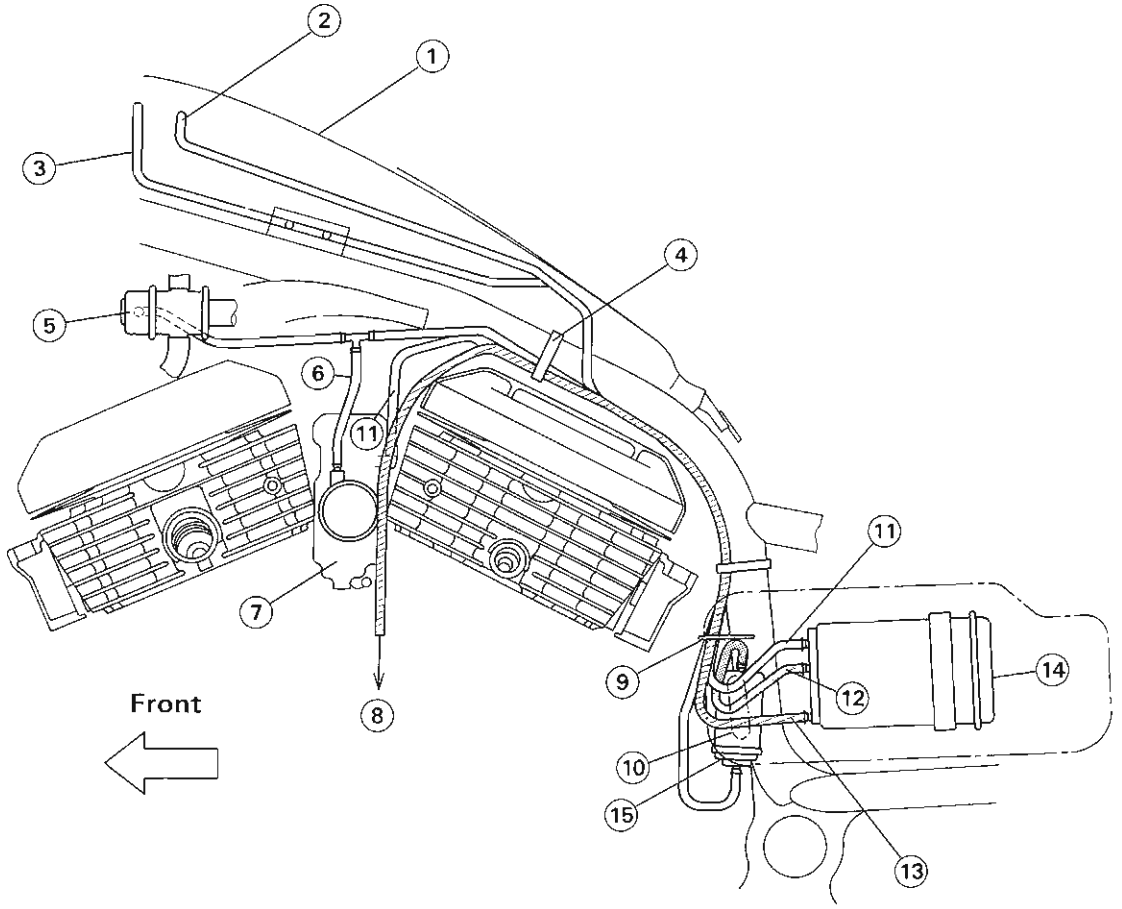

1. Fuel Tank
2. Red Hose (right)
3. Blue Hose (left)
4. Band
5. Vacuum Switch Valve
6. White Hose
7. Carburetor
8. To the air cleaner
9. Run the hose through the clamp.
10. Run the hose through the hole of the tool box.
11. Yellow Hose (Carburetor vent to the canister)
12. Blue Hose(Separator to the canister)
13. Green Hose (Air cleaner housing to the canister)
14. Canister
15. Separator

Evaporative Emission Control System (California model only)

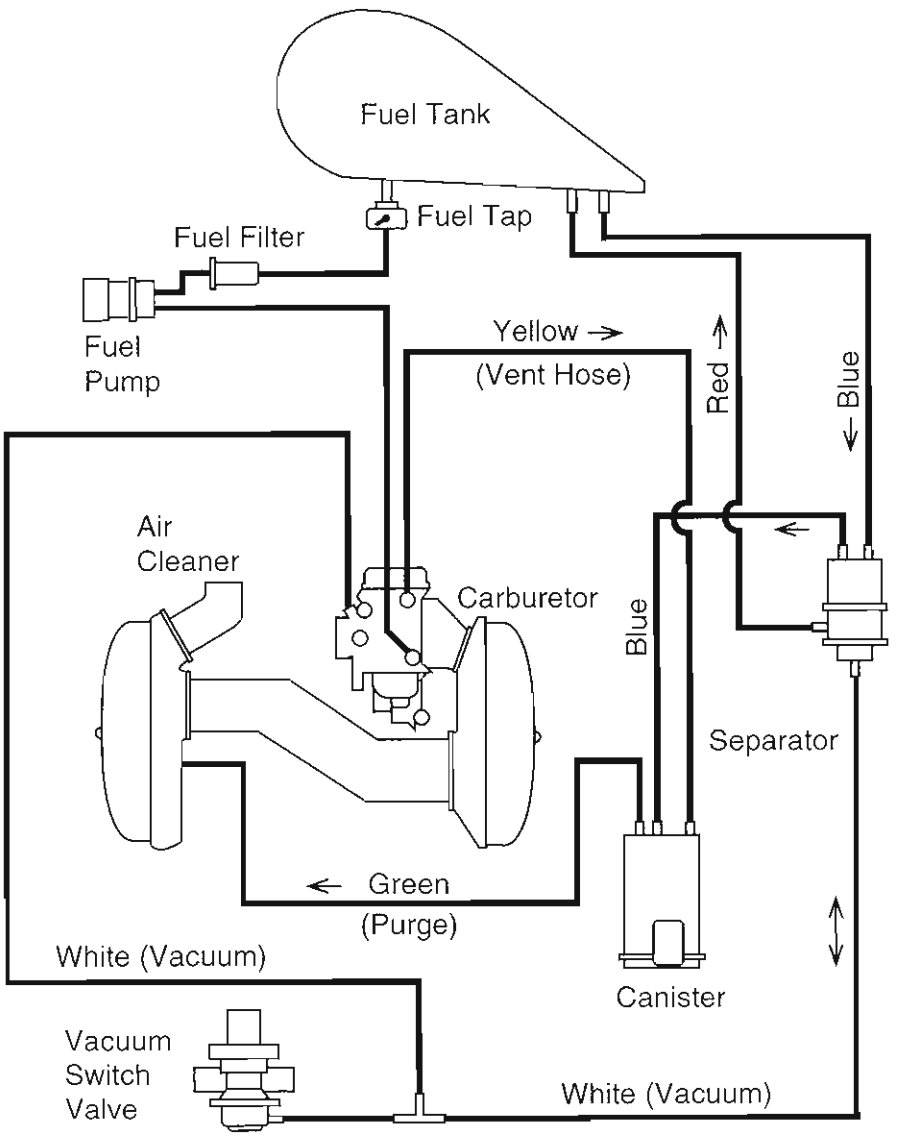

2

Fuel System

Table of Contents

Exploded View 2-2
Specifications 2-6
Throttle Grip and Cables 2-7
  Free Play Inspection 2-7
  Free Play Adjustment 2-7
Carburetor 2-8
  Idle Speed Adjustment ..... *
  High Altitude Performance Adjustment (US model) ..... *
  Fuel System Cleanliness Inspection 2-8
  Service Fuel Level Inspection 2-8
  Service Fuel Level Adjustment 2-9
  Carburetor Removal 2-10
  Carburetor Installation 2-11
  Carburetor Disassembly 2-12
  Carburetor Assembly 2-13
  Carburetor Cleaning 2-14
  Carburetor Inspection ..... *
  Inlet Manifold Removal 2-14
  Inlet Manifold Installation 2-14
Fuel Pump 2-16
  Removal 2-16
  Installation 2-16
  Fuel Filter Inspection ..... *
Air Cleaner 2-17
  Element Removal 2-17
  Element Cleaning and Inspection 2-17
  Left Air Cleaner Housing Removal 2-18
  Right Air Cleaner Housing Removal 2-18
  Right Air Cleaner Housing Installation 2-18
  Lower Air Cleaner Duct Removal 2-19
  Surge Tank Removal 2-19
Fuel Tank 2-20
  Fuel Tank Removal 2-20
  Fuel Tank Installation 2-20
  Fuel Tank and Cap Inspection 2-21
  Fuel Tank Cleaning 2-21
  Fuel Tap Removal 2-22
  Fuel Tap Installation 2-22
  Fuel Tap Inspection 2-22
Evaporative Emission Control System (US California Vehicle only) ..... *
  Parts Removal/Installation ..... *
  Hose Inspection ..... *
  Separator Inspection ..... *
  Separator Operation Test ..... *
  Canister Inspection ..... *

(*): Refer to Base Manual.

Exploded View

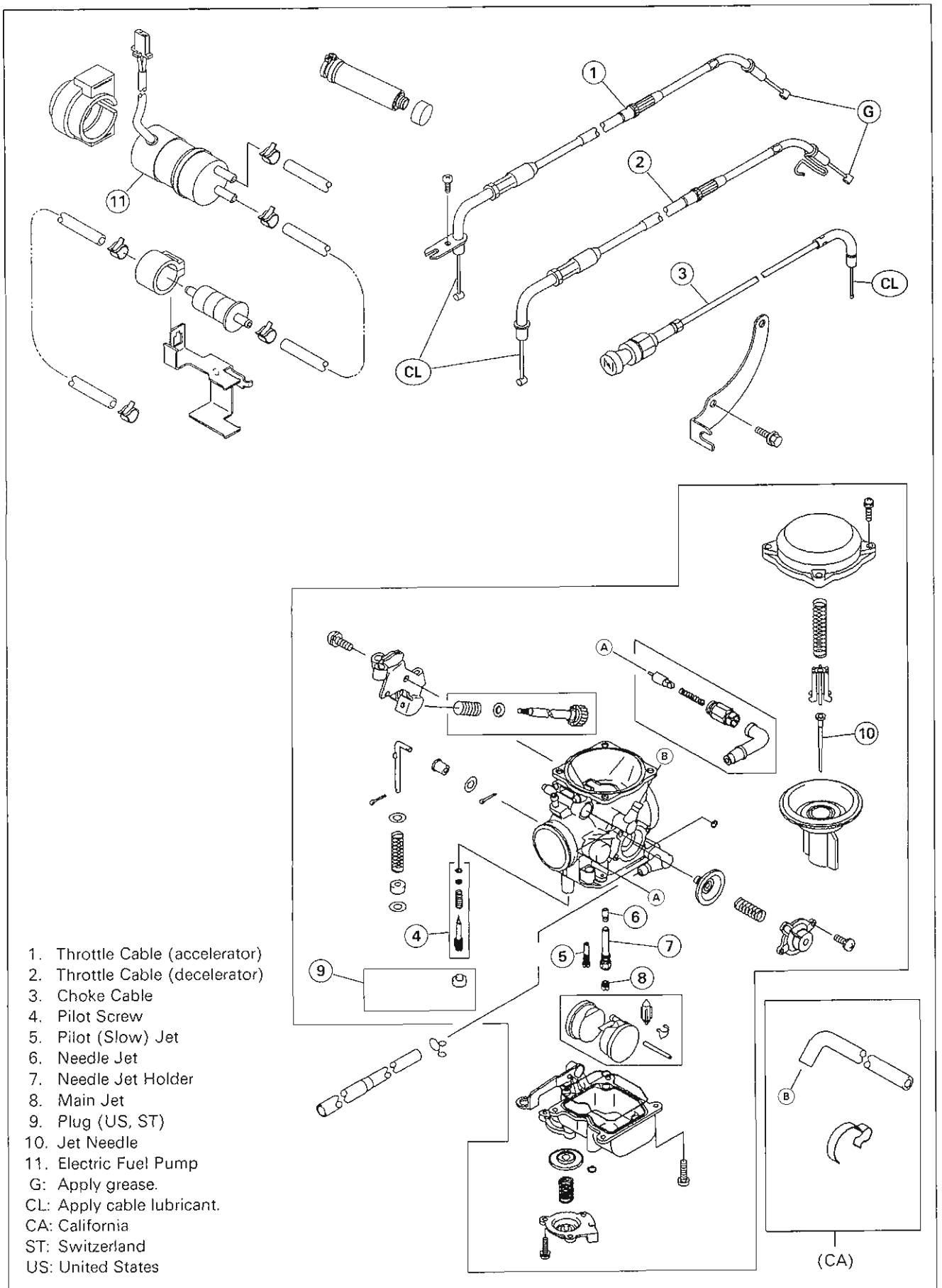

1. Throttle Cable (accelerator)
2. Throttle Cable (decelerator)
3. Choke Cable
4. Pilot Screw
5. Pilot (Slow) Jet
6. Needle Jet
7. Needle Jet Holder
8. Main Jet
9. Plug (US, ST)
10. Jet Needle
11. Electric Fuel Pump

G: Apply grease.
CL: Apply cable lubricant.
CA: California
ST: Switzerland
US: United States

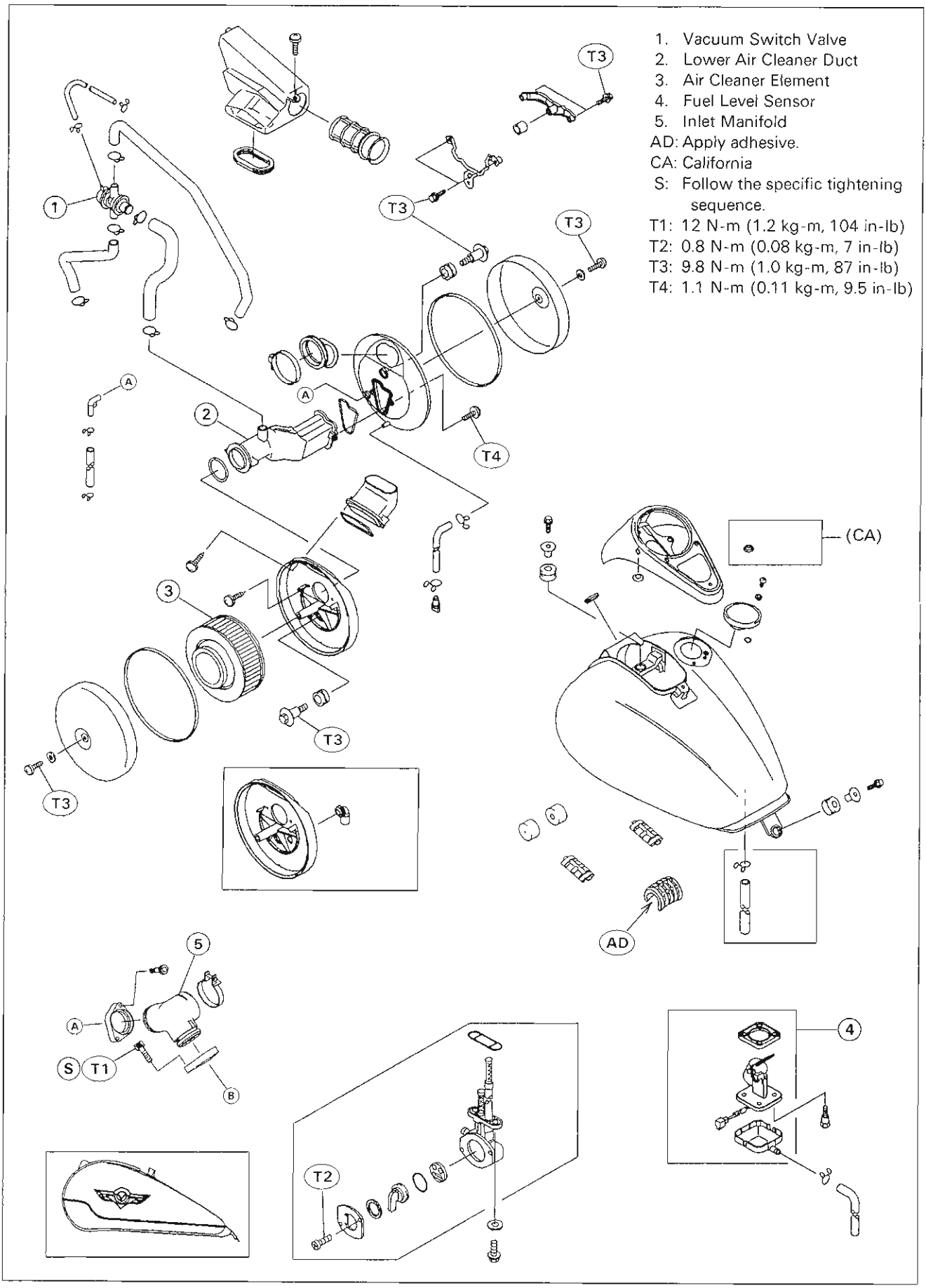
1. Vacuum Switch Valve
2. Lower Air Cleaner Duct
3. Air Cleaner Element
4. Fuel Level Sensor
5. Inlet Manifold
AD: Apply adhesive.
CA: California
S: Follow the specific tightening sequence.
T1: 12 N-m (1.2 kg-m, 104 in-lb)
T2: 0.8 N-m (0.08 kg-m, 7 in-lb)
T3: 9.8 N-m (1.0 kg-m, 87 in-lb)
T4: 1.1 N-m (0.11 kg-m, 9.5 in-lb)
T3
T3
T3
T3
T3
T4
(CA)
AD
T2
S
T1
A
B

Evaporative Emission Control System (California)

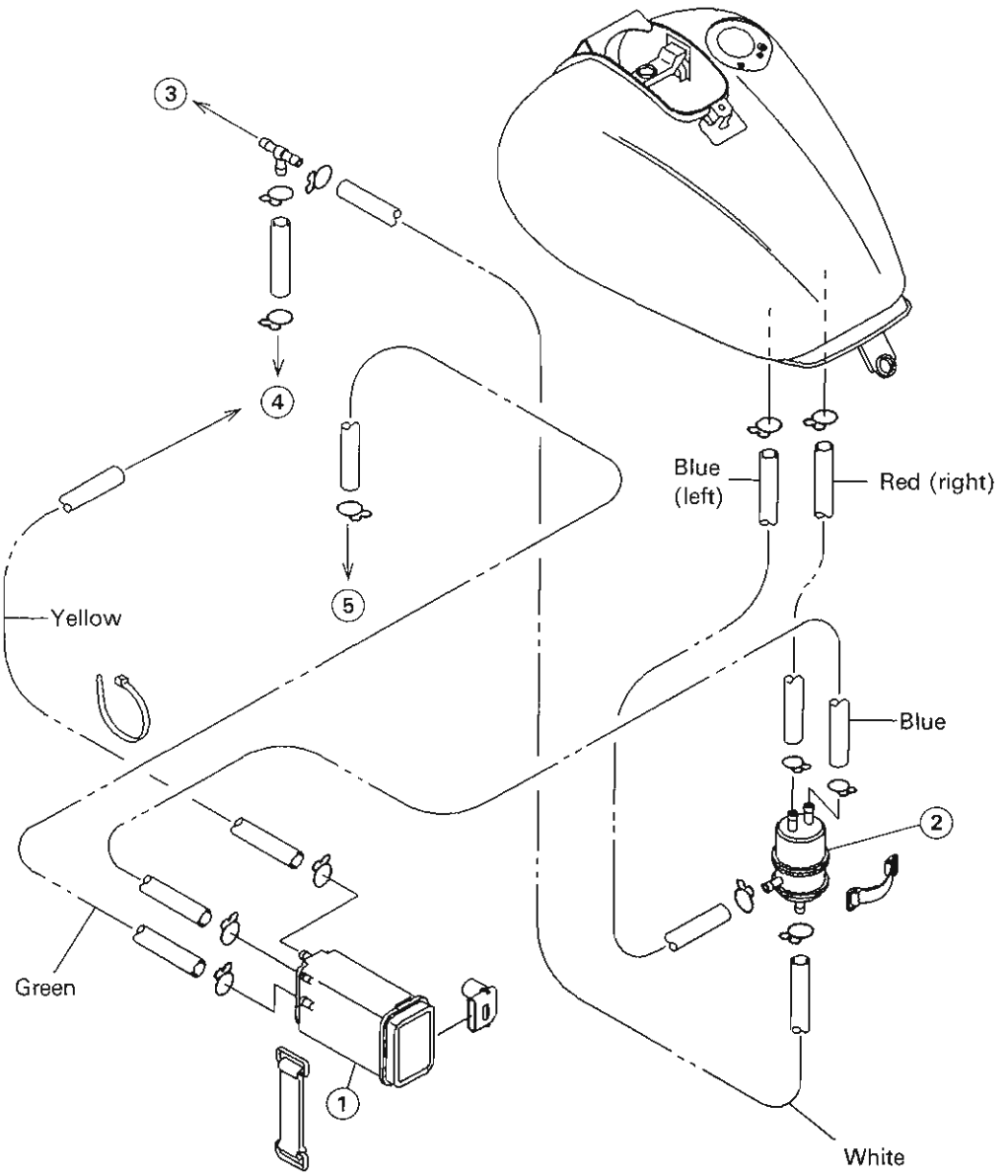

1. Canister
2. Separator
3. Vacuum Switch Valve
4. Carburetor
5. Air Cleaner Housing

Air Cleaner

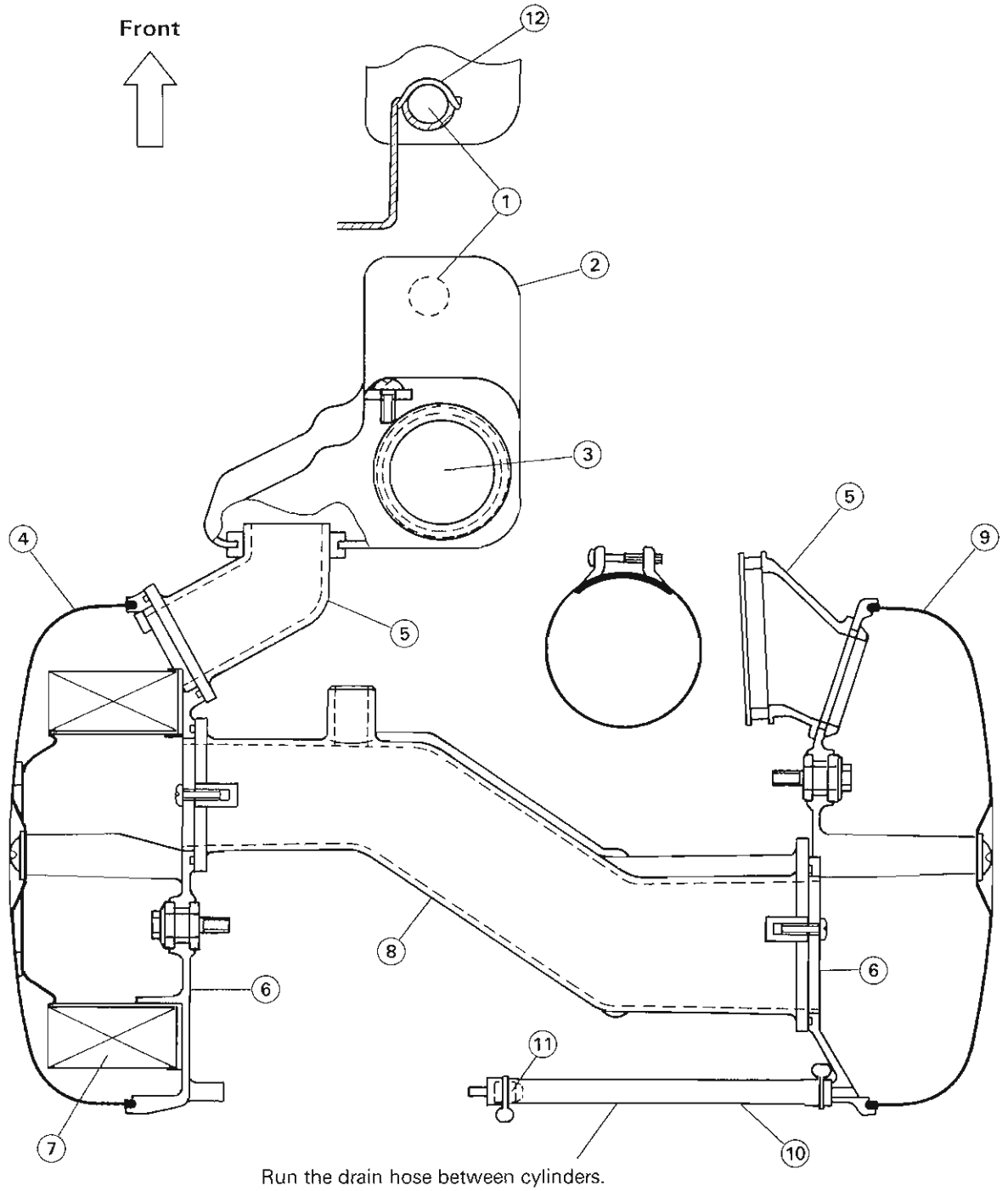

Run the drain hose between cylinders.

1. Stopper
2. Surge Tank
3. Inlet
4. Left Air Cleaner Cover
5. Upper Air Cleaner Duct
6. Air Cleaner Bases
7. Air Cleaner Element
8. Lower Air Cleaner Duct
9. Right Air Cleaner Cover
10. Drain Hose
11. Plug
12. O-ring

Specifications

Item	Standard
Throttle Grip Free Play	2 ~ 3 mm
Carburetor:	
Make, type	KEIHIN CVK40
Idle speed	800 ±50 r/min (rpm), (CA)(FG)(AR)(ST) 1 000±50 r/min (rpm)
Pilot Screw (turns out, for reference)	(2 ± ¼), (ST, 2 ½ ± ¼)
Service fuel level	0 ~ 2 mm below the float bowl mating surface
Float height	19.0 ±2 mm
Main jet	#140
Main air jet	#100
Needle jet	#6 (P/No. 16017-1383), (ST, P/No. 16017-1276)
Jet needle	N2PT, (ST) N2PS
Pilot jet (slow jet)	#45
Pilot air jet (slow air jet)	#50
Starter jet	#60
Throttle valve angle	10°
High altitude carburetor specifications (US)	
Pilot jet	#42
Main jet	#138

(AR): Austria
(CA): California
(FG): Germany
(ST): Switzerland
(US): United States

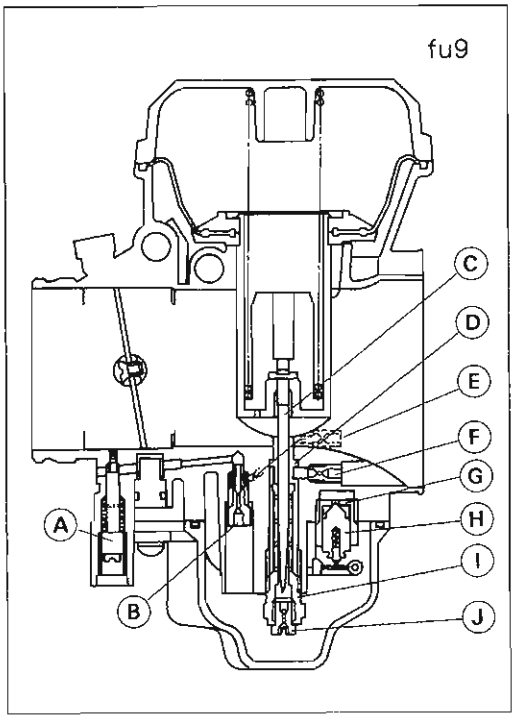

Pilot Screw [A]
Pilot Jet [B]
Jet Needle [C]
Needle Jet [D]
Pilot Air Jet [E]
Main Air Jet [F]
Valve Seat [G]
Float Valve [H]
Needle Jet Holder [I]
Main Jet [J]

Special Tools – Pressure Cable Luber: K56019-021
Pilot Screw Adjuster, C: 57001-1292
Carburetor Drain Plug Wrench, Hex 3: 57001-1269
Fuel Level Gauge: 57001-1017

Throttle Grip and Cables

Free Play Inspection (Periodic Inspection)

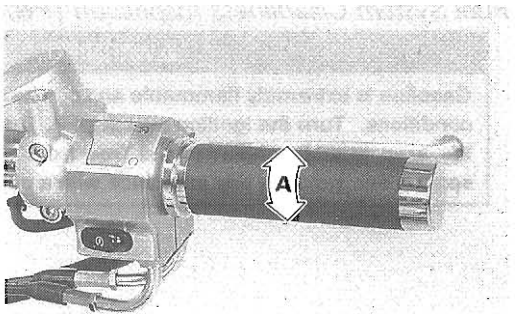

- Check the throttle grip free play [A].

★If the free play is incorrect, adjust the throttle cable.

Throttle Grip Free Play
Standard: 2 ~ 3 mm

Free Play Adjustment

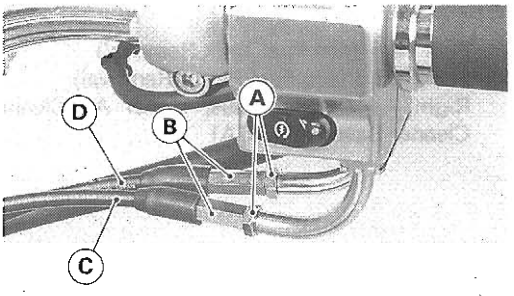

- Loosen the locknuts [A].
- Screw the adjusters [B] all the way in so as to give the throttle grip plenty of play.
- Turn out the decelerator cable [C] adjuster until there is no play.
- Tighten the locknut.
- Turn the accelerator cable [D] adjuster until the proper amount of throttle grip free play is obtained.
- Tighten the locknut.

★If the proper amount of free play cannot be obtained by using the adjusters at the throttle grip, use the adjusters in the middle of the throttle cables.

- Give the throttle grip plenty of play by turning the adjusters at the grip in fully.
- Remove the fuel tank (see Fuel Tank Removal).
- Loosen the locknuts [A].
- Turn the adjusters [B] in the middle of the throttle cables all the way in, so as to give the throttle grip plenty of play.
- With the throttle grip completely closed, turn the decelerator cable [C] adjuster until the inner cable just becomes tight.
- Tighten the locknut.
- Turn the accelerator cable [D] adjuster until the correct throttle grip free play is obtained.
- Tighten the locknut.

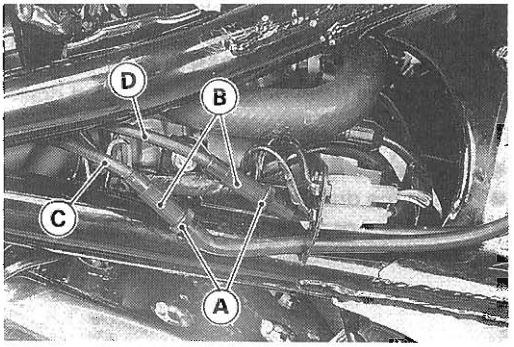

⚠WARNING

Operation with incorrectly routed or improperly adjusted cables could result in an unsafe riding condition.

Carburetor

Fuel System Cleanliness Inspection (Periodic Inspection)

⚠WARNING

Gasoline is extremely flammable and can be explosive under certain conditions. Turn the ignition switch OFF. Do not smoke. Make sure the area is well-ventilated and free from any source of flame or sparks; this includes any appliance with a pilot light.

● Remove:

Fuel Tank (see Fuel Tank Removal)
Fuel Pump (see Fuel Pump Removal)
Right Air Cleaner Base, Upper Air Cleaner Duct, and Right Air Cleaner Base Holder [A]

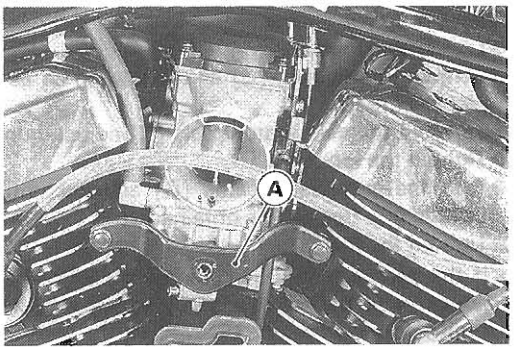

● Place a suitable conduit [A] under the outlet at the bottom of the carburetor float bowl. The conduit leads to a suitable container.
● Turn the fuel tap to the RES position.
● Turn out the drain plug a few turns and drain the float bowl.

Special Tool – Carburetor Drain Plug Wrench, Hex 3: 57001-1269 [B]

● Check to see if water or dirt comes out.
● Tighten the drain plug and turn the fuel tap to the OFF position.
★ If any water or dirt appears during the above inspection, clean the fuel system (see Carburetor Cleaning and Fuel Tank Cleaning).

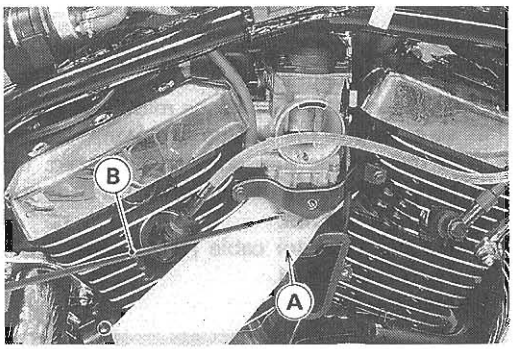

Service Fuel Level Inspection

⚠WARNING

Gasoline is extremely flammable and can be explosive under certain conditions. Turn the ignition switch OFF. Do not smoke. Make sure the area is well-ventilated and free from any source of flame or sparks; this includes any appliance with a pilot light.

● Remove the carburetor, and hold it upright on a stand (see Carburetor Removal).
● Prepare an auxiliary fuel tank and connect the fuel hose to the carburetor.
● Prepare a fuel hose (6mm in diameter and about 300 mm long).
● Connect the fuel level gauge [A] to the carburetor float bowl with the fuel hose.

Special Tool – Fuel Level Gauge: 57001-1017

● Hold the gauge [A] vertically against the side of the carburetor body so that the middle line [B] is several millimeters higher than the float bowl mating surface [C].
● Turn the fuel tap to the ON position to feed fuel to the carburetor and gauge, then turn the carburetor drain plug [D] out a few turns.

Special Tool – Carburetor Drain Plug Wrench, Hex 3: 57001-1269

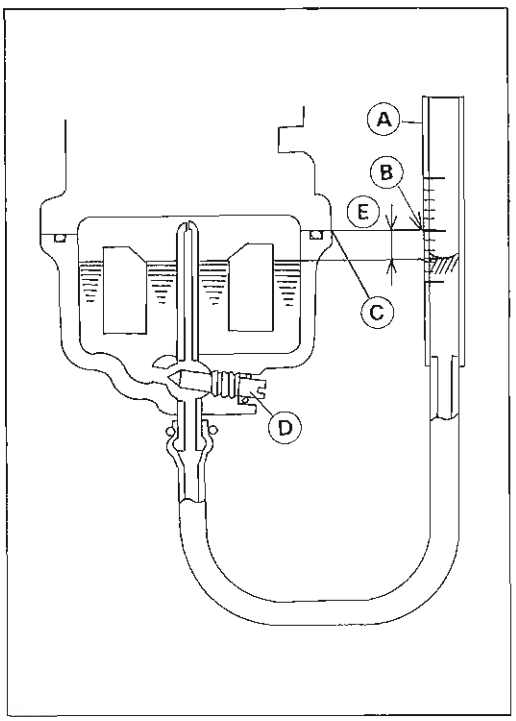

● Wait until the fuel level in the gauge settles.
● Keeping the gauge vertical, slowly lower the gauge until the middle line is even with the float bowl mating surface.

NOTE

○ *Do not lower the middle line below the float bowl mating surface. If the gauge is lowered and then raised again, the fuel level measured shows somewhat higher than the actual fuel level. If the gauge is lowered too far, dump the fuel out of it into a suitable container and start the procedure over again.*

● Read the fuel level [E] in the gauge and compare to the specification.
● Tighten the drain plug and remove the fuel level gauge.
★ If the fuel level is incorrect, adjust it (see Service Fuel Level Adjustment).

Service Fuel Level
Standard: 0 ~ 2 mm below the float bowl mating surface

Service Fuel Level Adjustment

⚠WARNING

Gasoline is extremely flammable and can be explosive under certain conditions. Turn the ignition switch OFF. Do not smoke. Make sure the area is well-ventilated and free from any source of flame or sparks; this includes any appliance with a pilot light.

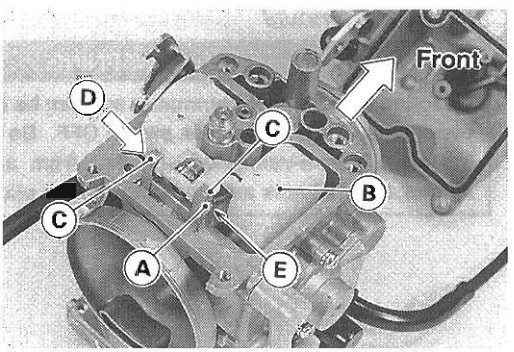

● Remove the carburetor, and drain the fuel into a suitable container.
● Remove the float bowl by taking out the screws.
● Tap the pivot pin [A] out and remove the floats [B].
● When removing and installing the pin, note the following.
○ Be careful not to break the pin holder legs [C].
○ When removing the pin, tap [D] the left end of the pin.
○ When installing the pin, tap [E] the right end of the pin.

● Bend the tang [A] on the float arm very slightly to change the float height.

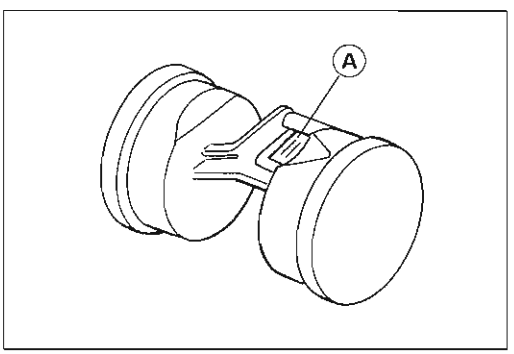

● Measure the float height tilting the carburetor so that the tang on the float just touches the needle rod in the float valve.
○ Increasing the float height lowers the fuel level and decreasing the float height raises the fuel level.

Float Height
Standard: **19 ±2 mm**

● Assemble the carburetor, and recheck the fuel level.
★ If the fuel level cannot be adjusted by this method, the float or the float valve is damaged.

Float Bowl Mating Surface [A]
Float Valve Needle Rod (contacted but unloaded) [B]
Float [C]
Float Height [D]

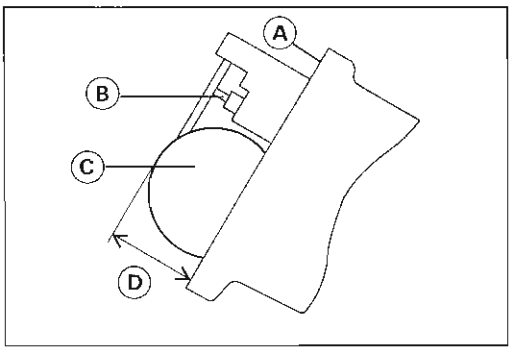

Carburetor Removal

⚠WARNING

Gasoline is extremely flammable and can be explosive under certain conditions. Turn the ignition switch OFF. Do not smoke. Make sure the area is well-ventilated and free from any source of flame or sparks; this includes any appliance with a pilot light.

● Remove:
Fuel Tank (see Fuel Tank Removal)
Fuel Pump (see this chapter)
Choke Knob [A]
Right Air Cleaner Housing (see Air Cleaner Housing Removal)
Carburetor Hoses

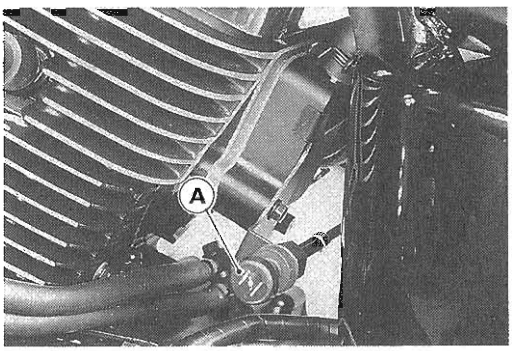

● Remove:
Right Air Cleaner Base Holder [A]

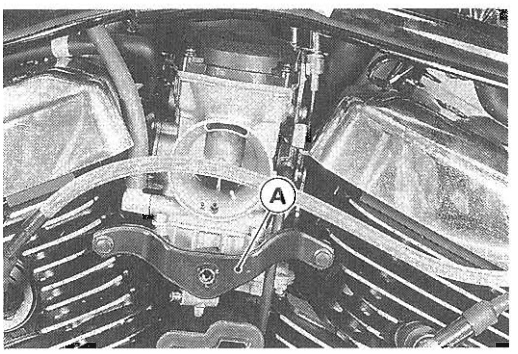

● Loosen the carburetor clamp screw [A].

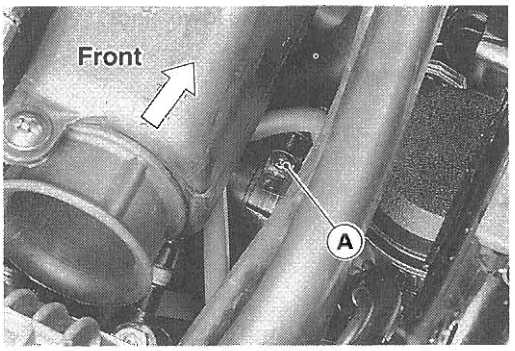

● Remove the right handlebar switch housing and remove the throttle cable upper ends.

Accelerator Cable [A] Decelerator Cable [B]

● Remove the carburetor and throttle cable lower ends.
● Stuff piece of lint-free, clean cloth into the inlet manifold to keep dirt out of the engine.

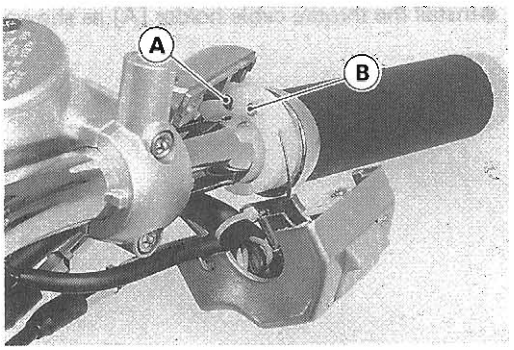

⚠WARNING

If dirt or dust is allowed to pass through into the carburetor, the throttle may become stuck, possibly causing an accident.

CAUTION

If dirt gets through into the engine, excessive engine wear and possibly engine damage will occur.

Carburetor Installation

● Install the holder clamp [A] as shown being careful of the screw position and the screw head [B] direction.
● Tighten the clamp screw so that the tab opening is 12 ~ 13 mm.

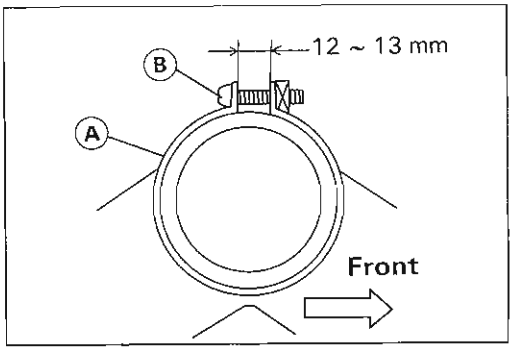

● Fit the ridge [A] into the notch [B] on the inlet manifold.

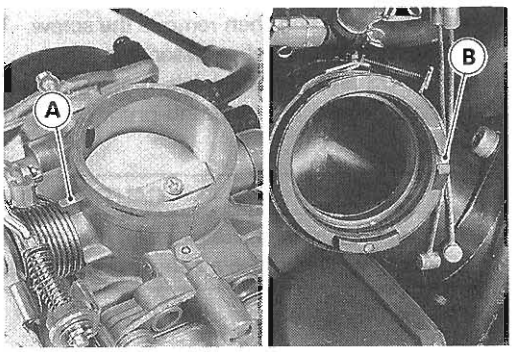

● Install the throttle cable lower ends.
Accelerator Cable [A]
Decelerator Cable [B]

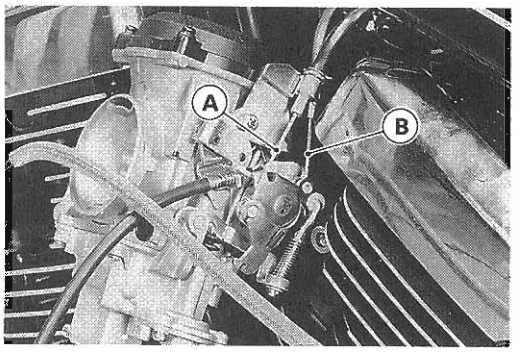

● Install the throttle cable holder [A] as shown.

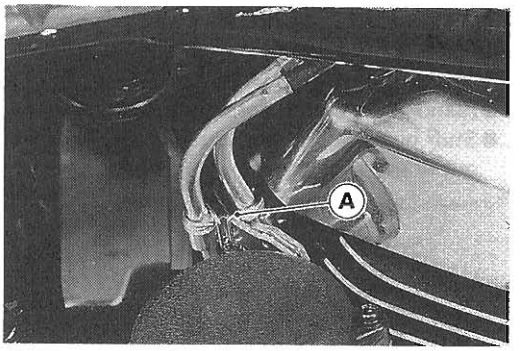

● Run the carburetor vent hose, vacuum hose, and fuel hose according to the Cable, Wire, and Hose Routing section of the General Information chapter.
● Turn the throttle grip and make sure that the throttle lever does not contact the holder screw or hose.

Carburetor Disassembly

● Remove the carburetor (see Carburetor Removal).

⚠WARNING

Gasoline is extremely flammable and can be explosive under certain conditions. Turn the ignition switch OFF. Do not smoke. Make sure the area is well-ventilated and free from any source of flame or sparks; this includes any appliance with a pilot light.

● The pilot screw is set at the factory and should not be removed. But if necessary, remove the pilot screw as follows.
● Turn in the pilot screw and count the number of turns until it seats fully but not tightly, and then remove the screw. This is to set the screw to its original position when assembling.
○ For the US and Swiss models, remove the pilot screw plug as follows: punch a hole in the plug and pry it out with an awl or other suitable tool.

CAUTION

During carburetor disassembly, be careful not to damage the diaphragm. Never use a sharp edge to remove the diaphragm.

- Push the needle jet [A] out from the inside of the carburetor with your finger.
- Replace the O-rings in the carburetor with new ones.

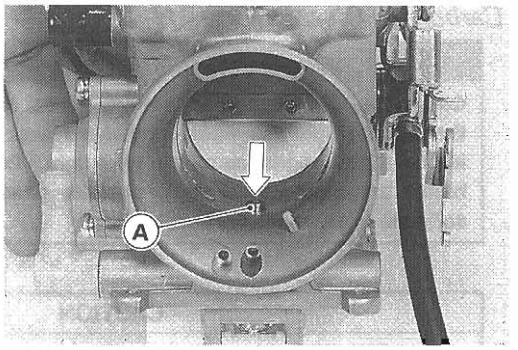

Carburetor Assembly

- Turn in the pilot screw [A] fully but not tightly, and then back it out the same number of turns counted during disassembly.
- For the US and Swiss models, install the pilot screw plug as follows; install a new plug [B] in the pilot screw hole of the carburetor body [C], and apply a small amount of a bonding agent [D] to the circumference of the plug to fix the plug.

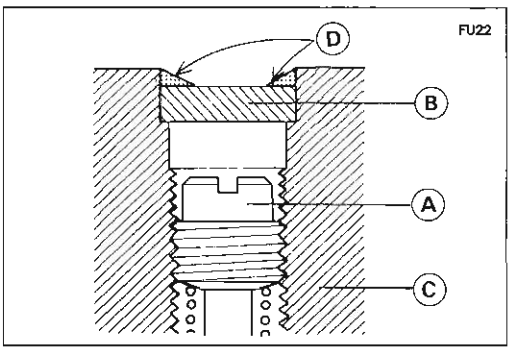

CAUTION
Do not apply too much bonding agent to the plug, or the pilot screw itself may be fixed.

- Turn the carburetor body upside-down, and drop the needle jet [A] into place so that the smaller diameter end [B] of the jet goes in first.
- Carefully screw in the needle jet holder [C]. It will seat against the needle jet, pushing the end of the jet into the carburetor bore.

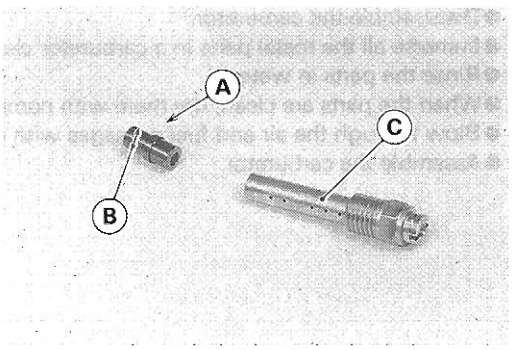

CAUTION
Do not force the needle jet holder [A] and main jet [B] or overtighten them. They could be damaged requiring replacement.

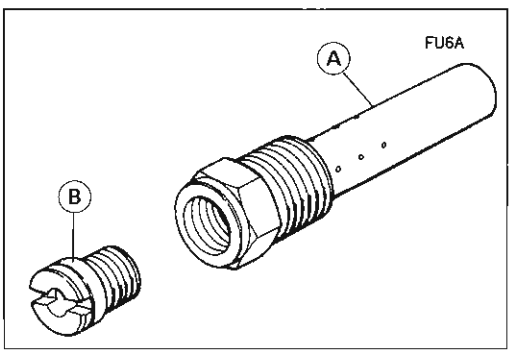

- Set the float height as specified (see Service Fuel Level Adjustment).
- Slip the jet needle [A] through the hole in the center of the vacuum piston [B], and put the spring seat [C] on the top of the needle.
- After installing the upper chamber cover, check that the vacuum piston slides up and down smoothly without binding in the carburetor bore.

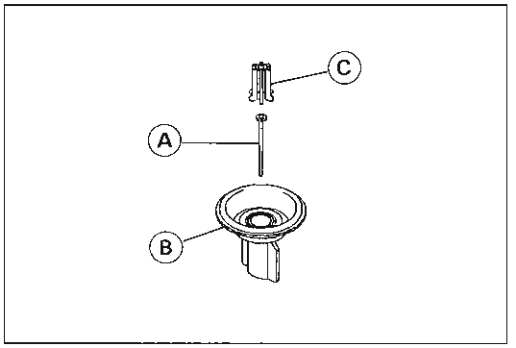

Carburetor Cleaning

⚠WARNING

Clean the carburetor in a well-ventilated area, and take care that there is no spark or flame anywhere near the working area; this includes any appliance with a pilot light. Because of the danger of highly flammable liquids, do not use gasoline or low-flash point solvents to clean the carburetor.

CAUTION

Do not use compressed air on an assembled carburetor, or the floats may be crushed by the pressure, and the vacuum piston diaphragm may be damaged.

Remove as many rubber or plastic parts from the carburetor as possible before cleaning the carburetor with a cleaning solution. This will prevent damage to or deterioration of the parts.

The carburetor body has plastic parts that cannot be removed. Do not use a strong carburetor cleaning solution which could attack these parts; instead, use a mild high-flash point cleaning solution safe for plastic parts.

Do not use wire or any other hard instrument to clean carburetor parts, especially jets, as they may be damaged.

- Disassemble the carburetor.
- Immerse all the metal parts in a carburetor cleaning solution.
- Rinse the parts in water.
- When the parts are clean, dry them with compressed air.
- Blow through the air and fuel passages with compressed air.
- Assemble the carburetor.

Inlet Manifold Removal

- Remove:
  Carburetor (see this chapter)
  Inlet Manifold Bolts [A]
- Remove the inlet manifold [B].

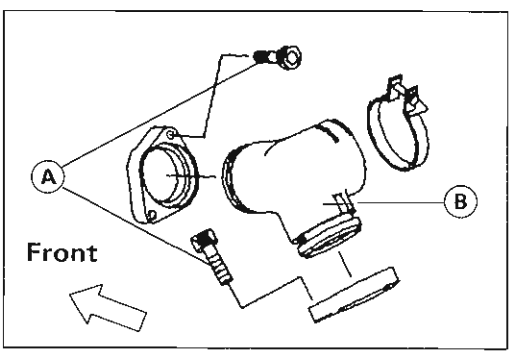

Inlet Manifold Installation

CAUTION

Each O-ring on the inlet manifold must be fitted into the groove snugly in the cylinder head. Otherwise, the O-ring could be damaged.

- Lay the lower air cleaner duct between the cylinders.
- Place the one leg [A] of the manifold on the inlet flange [B] and fit the O-ring into the groove of the flange.
- Next, push the other leg [C] onto the other inlet flange [D] and fit the O-ring into the groove of the flange.

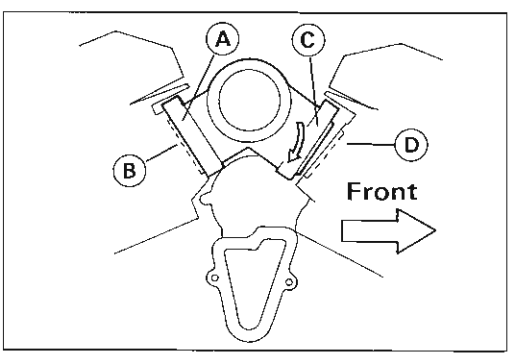

- Make sure that O-rings fit into the grooves snugly by shaking the manifold holders slightly right and left. If the manifold has a little play, it is OK.

- First, tighten all the manifold bolts [A] to a snug fit.
- Secondary, tighten two lower manifold bolts to the specified torque.
- Finally, tighten two upper manifold bolts to the specified torque.

Torque – Inlet Manifold Bolts: 12 N-m (1.2 kg-m, 104 in-lb)

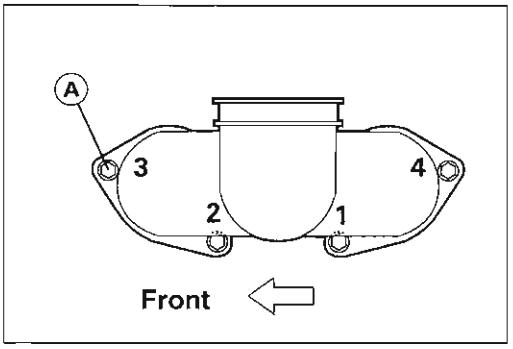

Fuel Pump

⚠WARNING

Gasoline is extremely flammable and can be explosive under certain conditions. Turn the ignition switch OFF. Do not smoke. Make sure the area is well-ventilated and free from any source of flame or sparks; this includes any appliance with a pilot light.
Be prepared for fuel spillage.

Removal

- Remove:
  Fuel Tank (see this chapter)
  Hose [A]
- Remove the fuel filter [B] from the bracket.

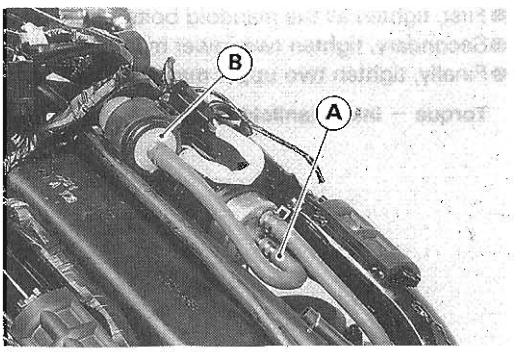

- Remove:
  Fuel Outlet Hose [A]
  Fuel Pump Connector [B]
- Remove the mounting bolts [C] and take off the fuel pump [D].

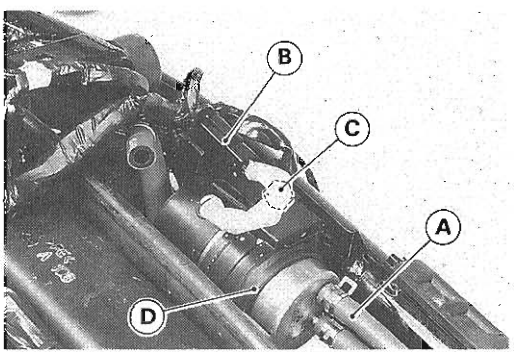

Installation

- Connect the fuel hose [A] from the fuel filter to the pump fitting marked "INLET" [B].
- Run the hoses so they will not be kinked or stretched.
- Install the fuel filter [C] so that the arrow [D] on it shows the fuel flow from the fuel tank to the fuel pump; the flange [E] faces rearward.

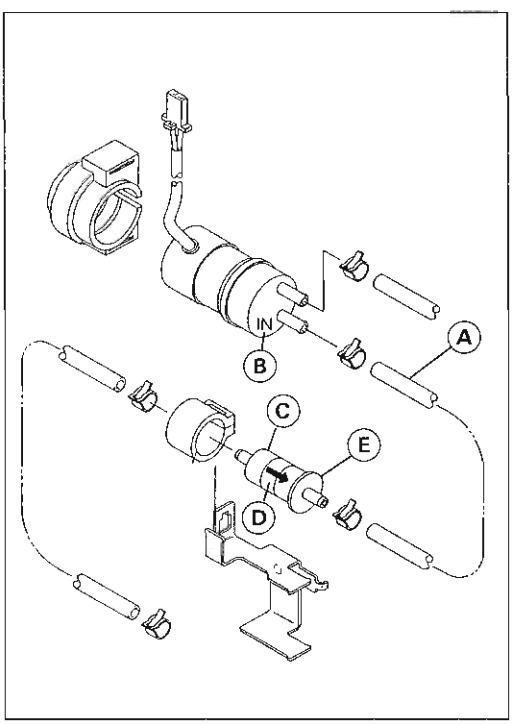

Air Cleaner

Element Removal

● Remove:
Screw [A] and Washer
Left Air Cleaner Cover [B]

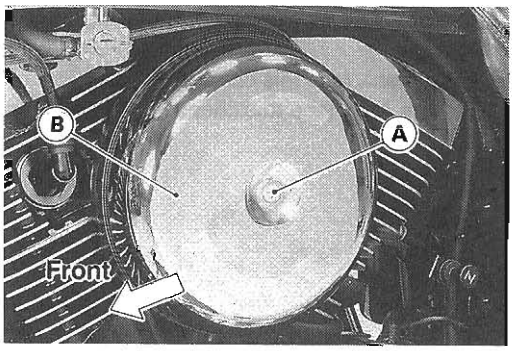

● Remove the element [A].
● Push a clean, lint-free towel into the carburetor intake to keep dirt or other foreign material from entering.

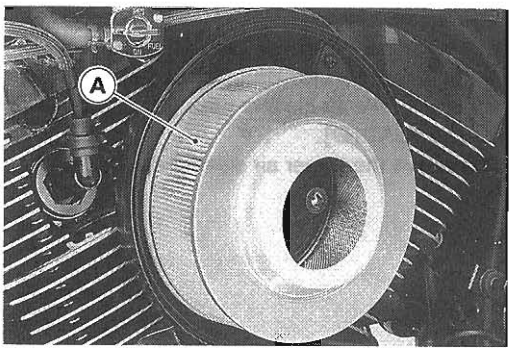

⚠WARNING

If dirt or dust is allowed to pass through into the carburetor, the throttle may become stuck, possibly causing accident.

CAUTION

If dirt gets through into the engine, excessive engine wear and possibly engine damage will occur.

Element Cleaning and Inspection (Periodic Inspection)

NOTE

○ *In dusty areas, the element should be cleaned more frequently than the recommended interval.*
○ *After riding through rain or on muddy roads, the element should be cleaned immediately.*

● Remove the air cleaner element (see Element Removal).
● Clean the element by tapping it lightly to loosen dust.
● Blow away the remaining dust by applying compressed air [A] from the inside to the outside (from the clean side to the dirty side).
● Visually check the element for tears or breaks and check the sponge gasket [B] also.
★ If the element or gasket has any tears or breaks, replace the element.

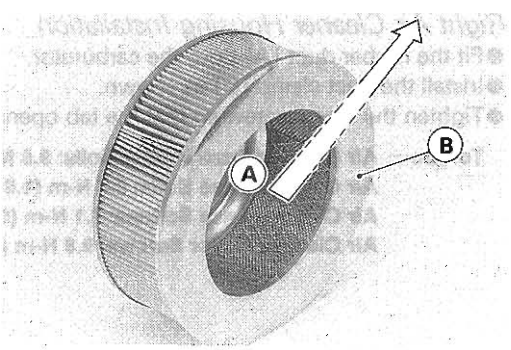

Left Air Cleaner Housing Removal

● Remove:
Fuel Tank (see this chapter)
Surge Tank (see this chapter) [A] and Screw [B]

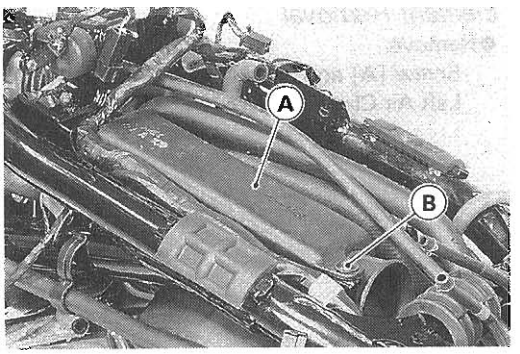

● Remove:
Air Cleaner Element (see Air Cleaner Element Removal)
Air Cleaner Base Bolt [A] and Screws [B]
● Remove the air cleaner base [C] and pull out the evoporative emission hose (CA) [D].
● Remove the upper air cleaner duct [E].

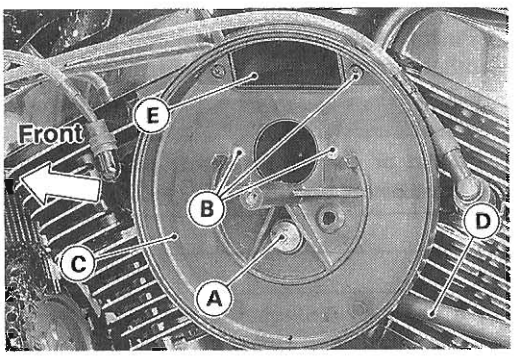

Right Air Cleaner Housing Removal

● Remove:
Right Air Cleaner Cover [A]

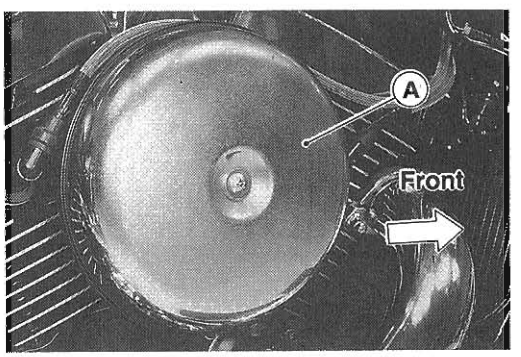

● Remove:
Air Cleaner Base Bolts and Screws [A]
● Remove the air cleaner base [B] and pull out the engine breather hose [C].
● Loosen the duct clamp [D] and remove the upper duct [E].

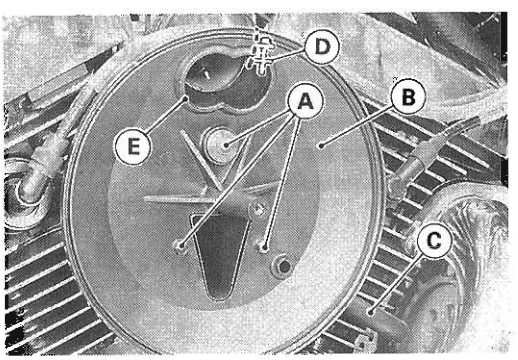

Right Air Cleaner Housing Installation

● Fit the rubber duct [A] onto the carburetor.
● Install the duct clamp [B] as shown.
● Tighten the clamp screw so that the tab opening is **7.5 ~ 8.5 mm.**

Torque – Air Cleaner Base Holder Bolts: 9.8 N-m (1.0 kg-m, 87 in-lb)
Air Cleaner Base Bolts: 9.8 N-m (1.0 kg-m, 87 in-lb)
Air Cleaner Base Screws: 1.1 N-m (0.11 kg-m, 10 in-lb)
Air Cleaner Cover Screws: 9.8 N-m (1.0 kg-m, 87 in-lb)

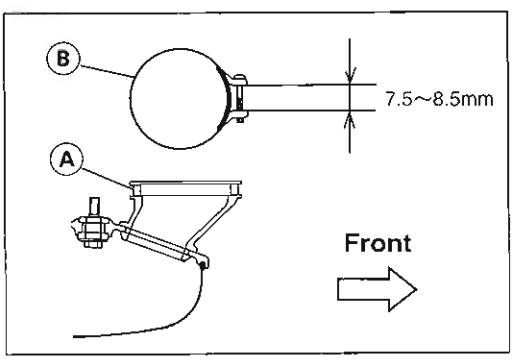

Lower Air Cleaner Duct Removal

- Remove:
  Right and Left Air Cleaner Housing (see this chapter)
  Carburetor (see this chapter)
  Right and Left Air Cleaner Base Holders [A]
  Inlet Manifold (see this chapter)

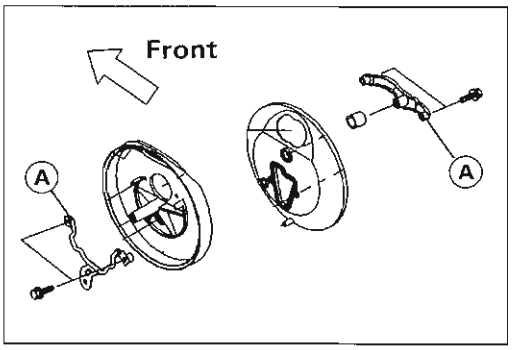

- Pull out the vacuum valve hose from the air cleaner duct.
- Remove the lower air cleaner duct [A] from the right side.

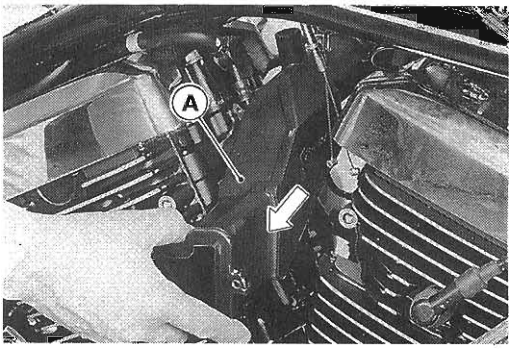

Surge Tank Removal

- Remove:
  Fuel Tank (see this chapter)
  Left Air Cleaner Base and Upper Duct
  Fuel Pump (see this chapter)
- Unscrew the mounting screw [A].
- Push down and move the surge tank [B] right to clear the holder, then remove the surge tank.

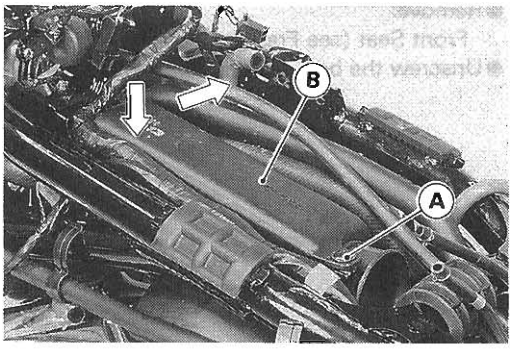

Fuel Tank

Fuel Tank Removal

⚠WARNING

Gasoline is extremely flammable and can be explosive under certain conditions. Turn the ignition switch OFF. Do not smoke. Make sure the area is well-ventilated and free from any source of flame or sparks; this includes any appliance with a pilot light.

CAUTION

For California model, if gasoline, solvent, water or any other liquid enters the canister, the canister's vapor absorbing capacity is greatly reduced. If the canister does become contaminated, replace it with a new one.

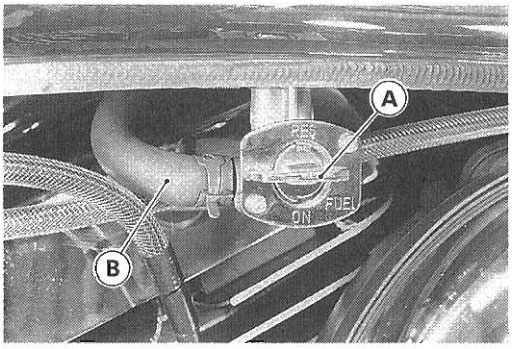

- Turn the fuel tap [A] to the OFF position.
- Remove:
  Fuel Hose [B]

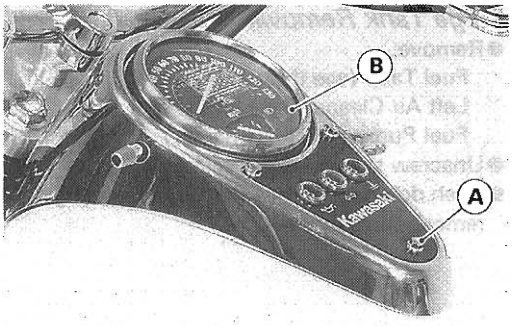

- Remove:
  Front Seat (see Frame chapter)
- Unscrew the bolt [A] and take off the meter unit [B].

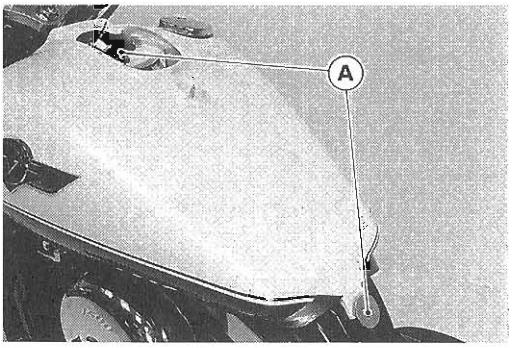

- Remove:
  Fuel Tank Bolts [A]
  Fuel Level Sensor Connector
  Fuel Tank
  Evaporative Emission Hoses (California model)
- Drain the fuel tank as follows:
  - Place a suitable container under the fuel tank.
  - Turn the fuel tap to the RES position to drain the fuel into a container.

Fuel Tank Installation

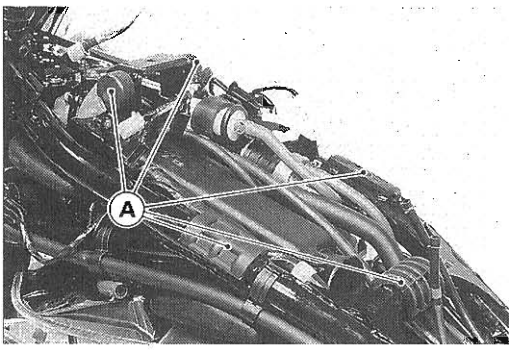

- Read the above WARNING.
- Route the hoses correctly (see General Information chapter).
- Check the rubber dampers [A] on the frame.

★If the dampers are damaged or deteriorated, replace them.

- Be sure to install the rubber dampers in place.
- Be sure the hoses are clamped securely to prevent leakage.

● Connect the lead connectors.
○ Be sure to connect the fuel level sensor connector [A].
● Install the meter unit.

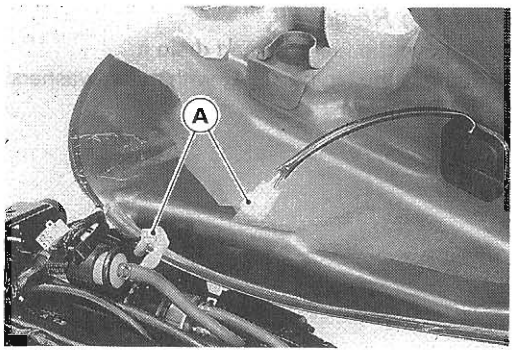

Fuel Tank and Cap Inspection

● Visually inspect the gasket [A] on the tank cap for any damage.
★ Replace the gasket if it is damaged.
● Remove the fuel tank and drain it.
★ Check to see if the breather pipe [B] in the tank is not clogged.
★ If the breather pipe is clogged, blow the breather free with compressed air.
★ If the tank cap breather is clogged, replace the tank cap.

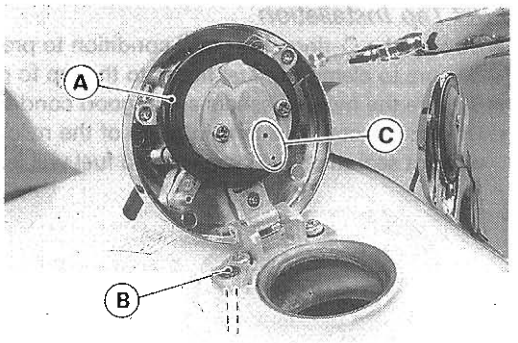

CAUTION

Do not apply compressed air to the air vent holes [C] in the tank cap. This could damage and clog the labyrinth in the cap.

Fuel Tank Cleaning

⚠WARNING

Clean the tank in a well-ventilated area, and take care that there are no sparks or flame anywhere near the working area. Because of the danger of highly flammable liquids, do not use gasoline or low-flash point solvents to clean the tank.

● Remove the fuel tank and drain it.
● Pour some high-flash point solvent into the fuel tank and shake the tank to remove dirt and fuel deposits.
● Pour high-flash point solvent through the tap in all lever positions.
● Pour the solvent out of the tank.
● Remove the fuel tap [A] from the tank by taking out the bolts [B] with washers.
● Clean the fuel tap filter screens in a high-flash point solvent.
● Dry the tank and the screens with compressed air.
● Install the fuel tap on the tank.
● Install the fuel tank (see Fuel Tank Installation).

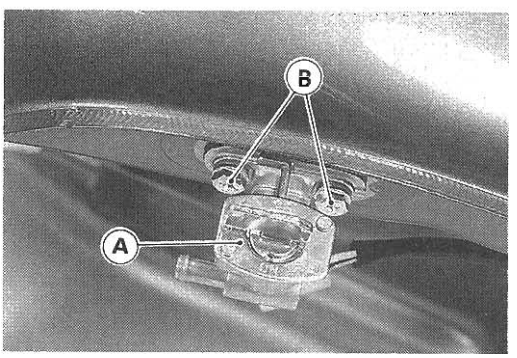

Fuel Tap Removal

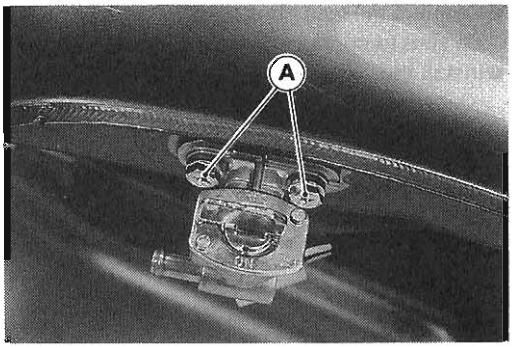

- Remove the fuel tank and drain it.
- Remove the tap bolts [A] with nylon washers and take out the fuel tap.

Fuel Tap Installation

- Be sure the O-ring is in good condition to prevent leaks.
- Be sure to clamp the fuel hoses to the tap to prevent leaks.
- Be sure the nylon washers are in good condition to prevent leaks.

○ Do not use steel washers in place of the nylon washers, because they will not seal the bolts properly and fuel will leak.

Fuel Tap Inspection

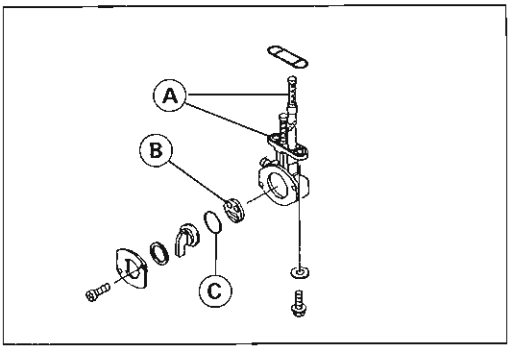

- Remove the fuel tap.
- Check the fuel tap filter screen [A] for any breaks or deterioration.

★If the fuel tap screens have any breaks or are deteriorated, they may allow dirt to reach the carburetor, causing poor running. Replace the fuel tap.

★If the fuel tap leaks, or allows fuel to flow when it is at OFF position, replace the damaged gasket [B] or O-ring [C].

Torque – Fuel Tap Plate Screws: 0.8 N-m (0.08 kg-m, 7 in-lb)

Cooling System

3

Table of Contents

Exploded View 3-2
Specifications 3-3
Coolant Flow Chart ..... *
Coolant 3-4
  Coolant Deterioration Inspection 3-4
  Coolant Level Inspection 3-4
  Coolant Draining 3-4
  Coolant Filling 3-5
  Coolant System Flushing 3-7
  Pressure Testing ..... *
Water Pump 3-8
  Water Pump Installation 3-8
  Visual Leak Inspection ..... *
  Water Pump, Mechanical Seal Removal ..... *
  Water Pump, Mechanical Seal Installation ..... *
  Mechanical Seal Replacement 3-8
Radiator and Radiator Fan 3-10
  Removal 3-10
  Installation ..... *
  Radiator Inspection ..... *
  Radiator Cap Inspection 3-10
Thermostat 3-12
  Removal 3-12
  Installation ..... *
  Inspection ..... *
Radiator Fan Switch ..... *
  Removal ..... *
  Installation Note ..... *
  Inspection ..... *

(*): Refer to Base Manual.

Exploded View

1. Coolant Air Bleeder Bolt
2. Thermostat
3. Radiator Cap
4. Radiator
5. Water Pump Impeller
6. Radiator Drain Bolt
7. Radiator Fan Switch
8. Water Temperature Switch
9. Water Pump Drain Bolt

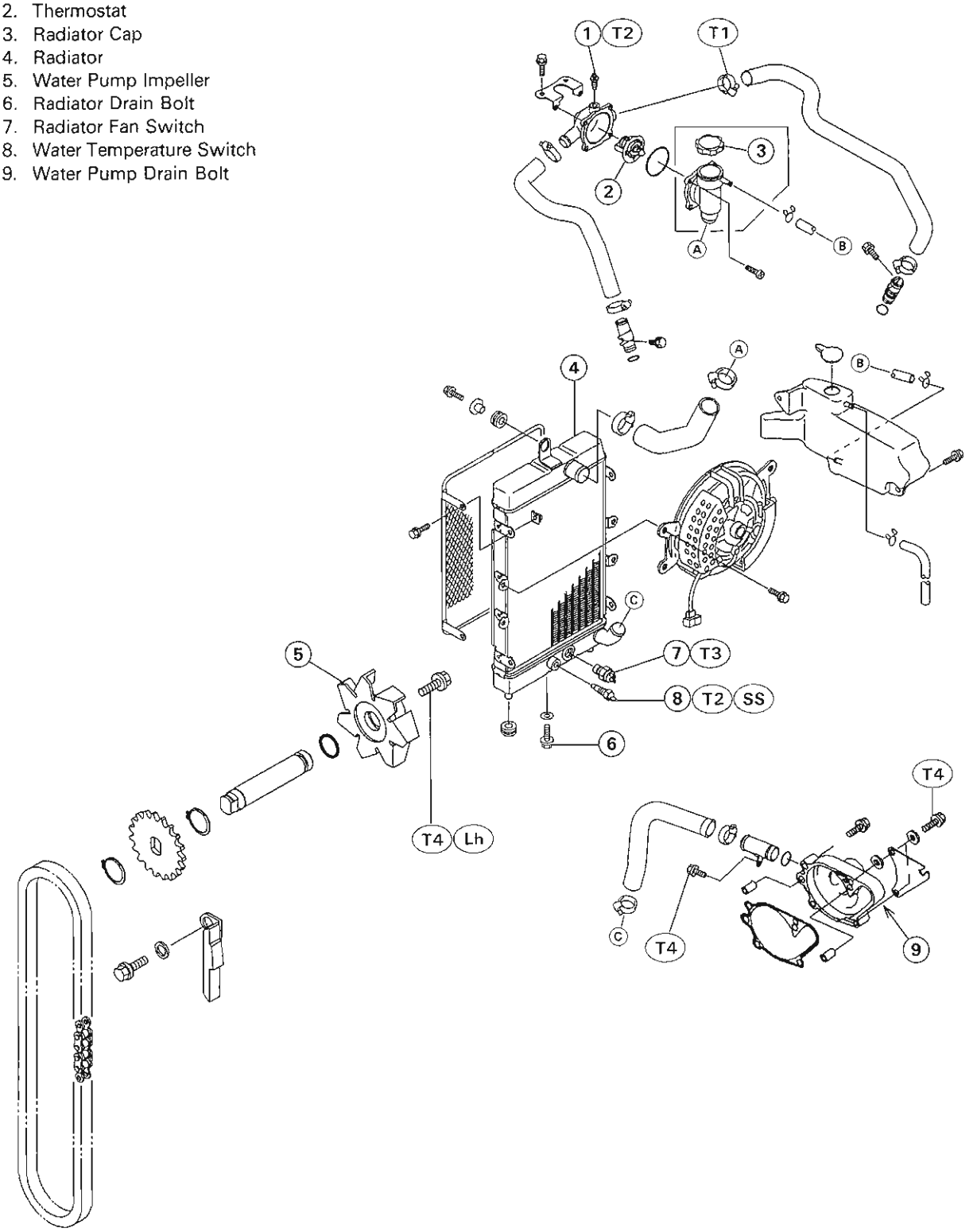

Lh: Left-hand Threads
SS: Apply silicone sealant. (Kawasaki Bond: 56019-120)

T1: 2.5 N-m (0.25 kg-m 22 in-lb)
T2: 7.8 N-m (0.80 kg-m, 69 in-lb)

T3: 18 N-m (1.8 kg-m, 13.0 ft-lb)
T4: 9.8 N-m (1.0 kg-m, 87 in-lb)

Specifications

Coolant provided when shipping:	
Type (recommended)	Permanent type antifreeze (soft water and ethylene glycol plus corrosion and rust inhibitor chemicals for aluminum engines and radiators)
Color	Green
Mixed ratio	Soft water 50%, coolant 50%
Freezing point	− 35°C (−31°F)
Total amount	2.3 L (reserve tank full level including radiator and engine)
Radiator Cap	
Relief pressure	93 ~ 123 kPa (0.95 ~ 1.25 kg/cm², 14 ~ 18 psi)
Thermostat:	
Valve opening temperature	58 ~ 62°C (136° ~ 144°F)
Valve full opening lift	8 mm or more @95°C (203°F)

Special Tools – Bearing Driver Set: 57001-1129
Bearing Remover Shaft: 57001-1265
Bearing Remover Head, Φ10 x Φ12: 57001-1266
Sealant – Kawasaki Bond (Silicone Sealant): 56019-120

Coolant

Coolant Deterioration Inspection

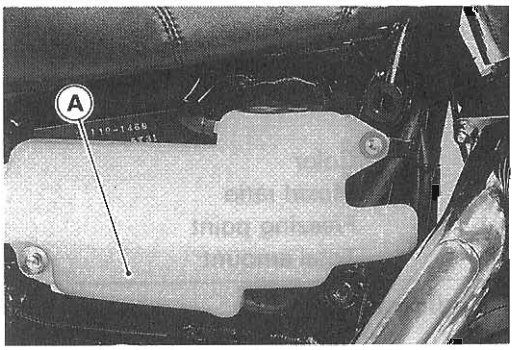

- Remove the right side cover (see Frame chapter).
- Visually inspect the coolant [A] in the reserve tank.

★If whitish cotton-like wafts are observed, aluminum parts in the cooling system are corroded. If the coolant is brown, iron or steel parts are rusting. In either case, flush the cooling system.

★If the coolant gives off an abnormal smell, check for a cooling system leak. It may be caused by exhaust gas leaking into the cooling system.

Coolant Level Inspection

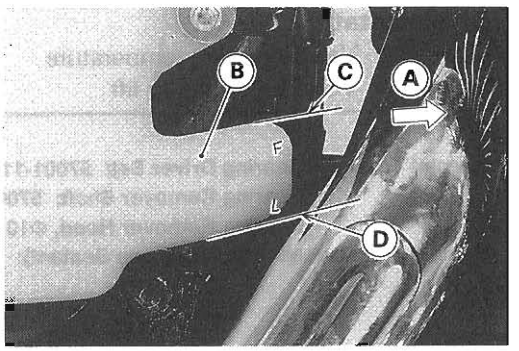

NOTE

○*Check the level when the engine is cold (room or ambient temperature).*

- Check the coolant level in the reserve tank with the motorcycle held upright. The coolant level should be between the FULL level and the LOW level (In the photo, the right side cover has been removed for clarity).

  Front [A]
  Reserve Tank [B]
  FULL Level [C]
  LOW Level [D]

★If the coolant level is lower than the LOW level, remove the right side cover and the reserve tank cap then add coolant to the FULL level.

CAUTION

For refilling, add the specified mixture of coolant and soft water. Adding water alone dilutes the coolant and degrades its anticorrosion properties.
The diluted coolant can attack the aluminum engine parts. In an emergency, soft water can be added, but the diluted coolant must be returned to the correct mixture ratio within a few days.
If coolant must be added often, or the reserve tank has run completely dry, there is probably leakage in the cooling system. Check the system for leaks.

Coolant Draining (Periodic Maintenance)

⚠WARNING

To avoid burns, do not remove the radiator cap or try to change the coolant when the engine is still hot. Wait until it cools down.
Coolant on tires will make them slippery can cause an accident and injury.
Immediately wash away any coolant that spills on the frame, engine, wheels, or other painted parts.
Since coolant is harmful to the human body, do not use for drinking.

● Place a container under the radiator drain plug [A], then remove the drain plug.

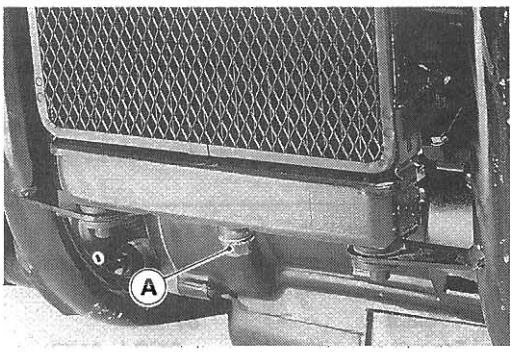

● Remove the meter unit on the fuel tank (see Electrical System chapter).
● Remove the radiator cap [A] in two steps. First turn the cap counterclockwise to the first stop. Then push and turn it further in the same direction and remove the cap.
○ The coolant will drain from the radiator and engine.

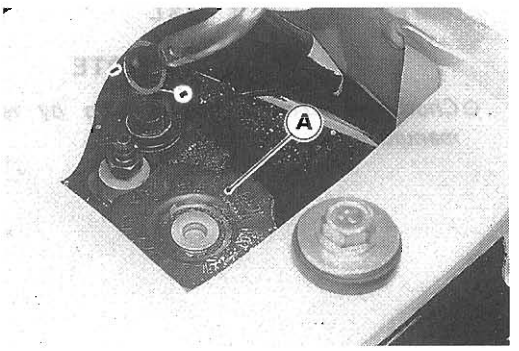

● Remove the water pump drain plug [A]. The remaining coolant will drain from the water pump [B].
○ Place a suitable conduit under the drain hole of the pump cover. The conduit leads to a suitable container.

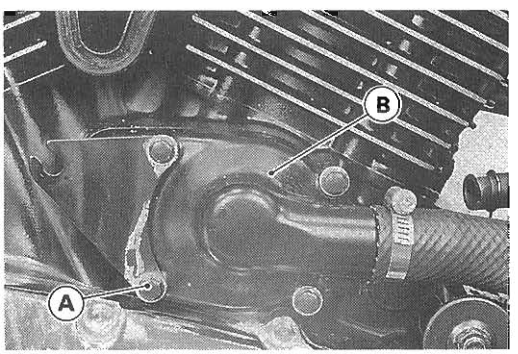

● Remove:
Right Side Cover (see Frame chapter)
Reserve Tank Bolts
● Turn over the reserve tank [A], remove the hose [B], and pour the coolant into a suitable container.

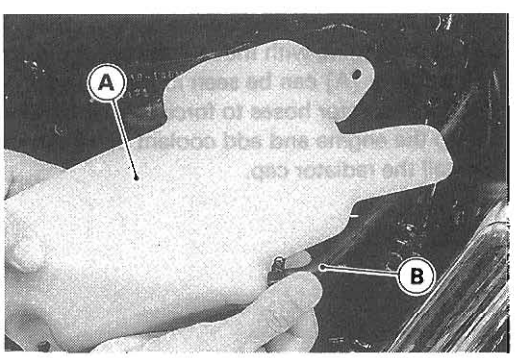

Coolant Filling (Periodic Maintenance)

● Tighten the drain plug at the bottom of the radiator.
● Fill the radiator up to the filler neck [A] with coolant, and install the radiator cap.

NOTE

○ *Pour in the coolant slowly so that it can expel the air from the engine and radiator.*

● Fill the reserve tank up to the FULL level with coolant, and install the cap.

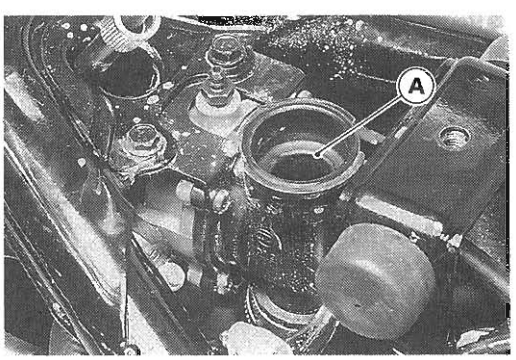

CAUTION

Soft or distilled water must be used with the antifreeze (see Specifications in this chapter) in the cooling system.
If hard water is used in the system, it causes scales accumulation in the water passages, and considerably reduces the efficiency of the cooling system.

Water and Coolant Mixture Ratio (when shipping)

Soft Water	:	**50 %**
Coolant	:	**50 %**
Freezing Point	:	**−35°C (−31°F)**
Total Amount	:	**2.3 L**

NOTE

○ *Choose a suitable mixture ratio by referring to the coolant manufacturer's directions.*

● Bleed the air from the cooling system using the air bleeder bolt [A].
● Tighten the air bleeder bolt.

Torque − Coolant Air Bleeder Bolt: 7.8 N-m (0.80 kg-m, 69 in-lb)

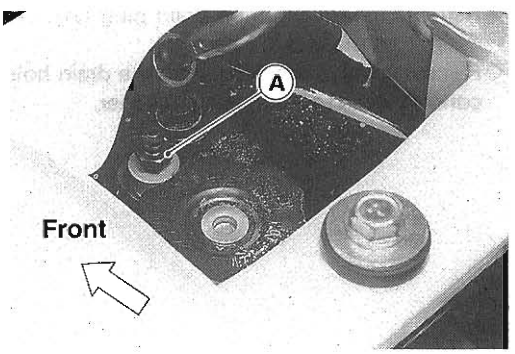

● Bleed the air from the cooling system while the engine is running.
○ Start the engine with the radiator cap removed and run it until no more air bubbles [A] can be seen in the coolant.
○ Tap the radiator hoses to force any air bubbles caught inside.
○ Stop the engine and add coolant up to the radiator filler neck.
● Install the radiator cap.

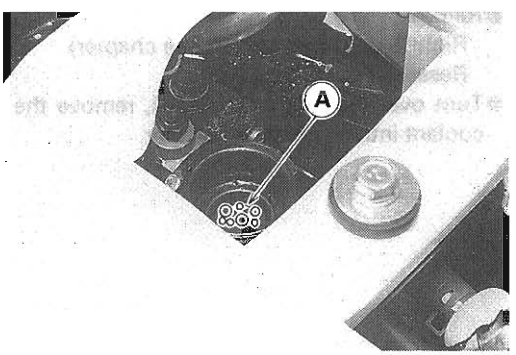

● Remove the reserve tank cap.
● Fill the reserve tank up to the FULL level [A] with coolant and install the cap.

CAUTION

Do not add more coolant above the FULL level.

● Install the right side cover.

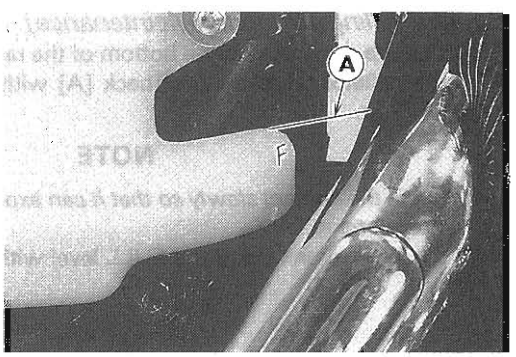

Cooling System Flushing

Over a period of time, the cooling system accumulates rust, scale, and lime in the water jacket and radiator. When this accumulation is suspected or observed, flush the cooling system. If this accumulation is not removed, it will clog up the water passage and considerably reduce the efficiency of the cooling system.

- Drain the cooling system (see Coolant Draining).
- Fill the cooling system with fresh water mixed with a flushing compound.

CAUTION
Do not use a flushing compound which is harmful to the aluminum engine and radiator. Carefully follow the instructions supplied by the manufacturer of the cleaning product.

- Warm up the engine, and run it at normal operating temperature for about ten minutes.
- Stop the engine, and drain the cooling system.
- Fill the system with fresh water.
- Warm up the engine and drain the system.
- Repeat the previous two steps once more.
- Fill the system with a permanent type coolant and bleed the air from the system (see Coolant Filling).

Water Pump

Water Pump Installation

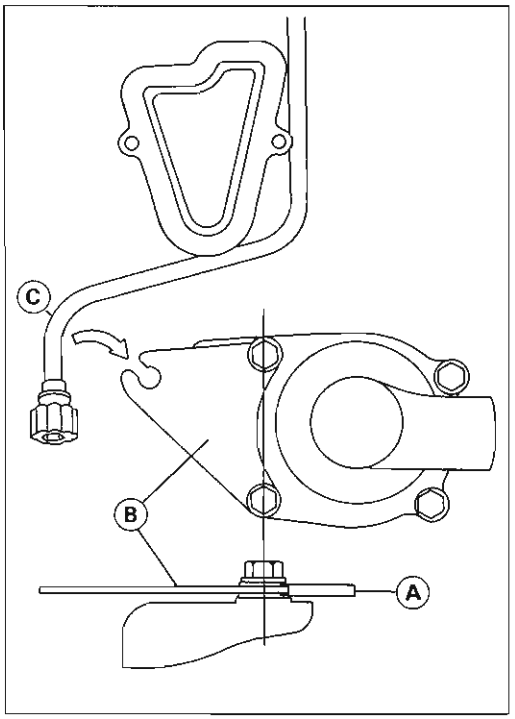

- There are aluminum washers [A] on each side of the bracket [B]. Replace them with new ones when installing.

Torque – Water Pump Cover Bolts: 9.8 N-m (1.0 kg-m, 87 in-lb)

- Fit the idle adjusting screw [C] onto the bracket.

Mechanical Seal Replacement

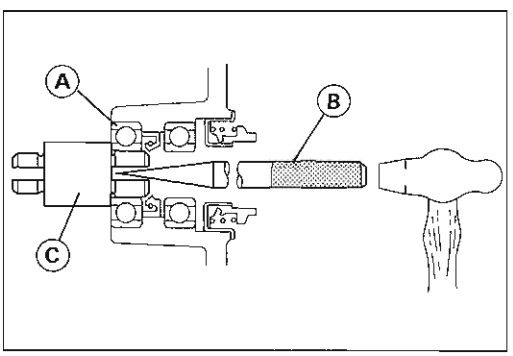

★If the mechanical seal is damaged, the seal and ball bearings is probably damaged after a long time operation. Replace the mechanical seal, ball bearings and oil seal.

- Split the crankcase (see Crankshaft/Transmission chapter).
- Remove the water pump impeller.
- Pull out the water pump shaft from the inside of the right crankcase.
- Take the bearing [A] out of the right crankcase, using the bearing remover.

Special Tools – Bearing Remover Shaft: 57001-1265 [B]
Bearing Remover Head, Φ10 x Φ12: 57001-1266 [C]

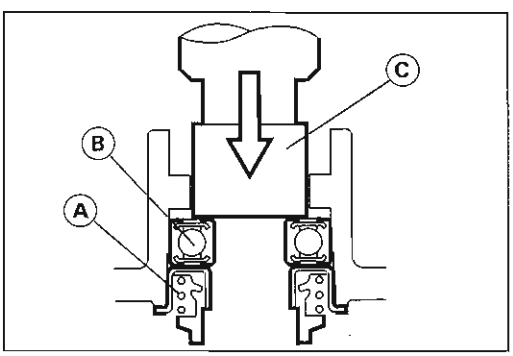

- Using a thick-bladed screwdriver, pry out the oil sea.
- Press out the mechanical seal [A] and ball bearing [B] from the inside of the right crankcase with the bearing driver set [C].

Special Tool – Bearing Driver Set: 57001-1129

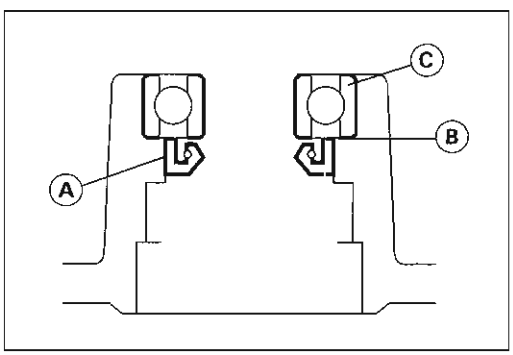

○Be sure to replace the mechanical seal, oil seal, and ball bearings with new ones because these parts will be damaged by removal.

- Apply plenty of high temperature grease to the oil seal lips.
- Apply oil to the outer circumference of the oil seal.
- Press the oil seal [A] into the hole from the inside of the right crankcase with the bearing driver set so that the spring side of the seal lips is toward the inside of the crankcase.

Special Tool – Bearing Driver Set: 57001-1129

- Press the oil seal in until the seal end is even with the step [B] of the hole as shown.

○ Use the bearing driver which has a larger diameter than the oil seal.

CAUTION
Do not block the coolant drainage outlet passage with the oil seal by pressing it too far into the cover.

● Press in each ball bearing [C] with its manufacturer's mark facing out until it bottoms out.

● Press the mechanical seal [A] into the hole with the bearing driver set [B] until its flange touches the step [C].

CAUTION
Never tap on the mechanical seal, use a press only. **Be careful not to damage the sealing surface of the mechanical seal.**

● Install the water pump shaft from the inside of the right crankcase.

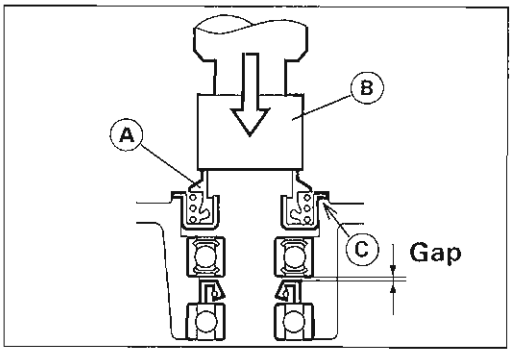

● Clean the sliding surface of a new mechanical seal with a high-flash point solvent, and apply a little coolant to the sliding surface to give the mechanical seal initial lubrication.
● Apply coolant to the surface of the rubber seal [A] and sealing seat [B], and press the rubber seal and sealing seat into the impeller by hand until the seat bottoms out.
● Tighten the water pump impeller bolt by turning the bolt counter-clockwise.

Torque – Water Pump Impeller Bolt: 9.8 N-m (1.0 kg-m, 87 in-lb)

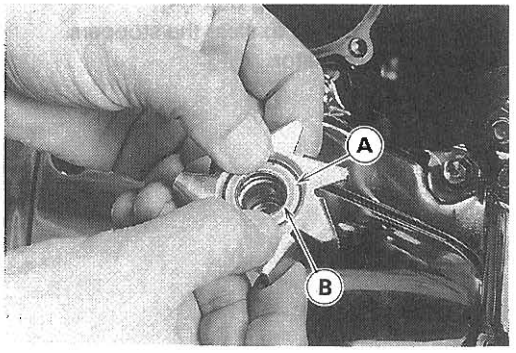

Radiator and Radiator Fan

⚠WARNING

The radiator fan is connected directly to the battery. The radiator fan may start even if the ignition switch is off. NEVER TOUCH THE RADIATOR FAN UNTIL THE RADIATOR FAN CONNECTOR IS DISCONNECTED. TOUCHING THE FAN BEFORE THE CONNECTOR IS DISCONNECTED COULD CAUSE INJURY FROM THE FAN BLADES.

Removal

- Drain the coolant (see this chapter).
- Remove:
  Fuel Tank (see Fuel System chapter)
  Radiator Fan Motor Connector [A]

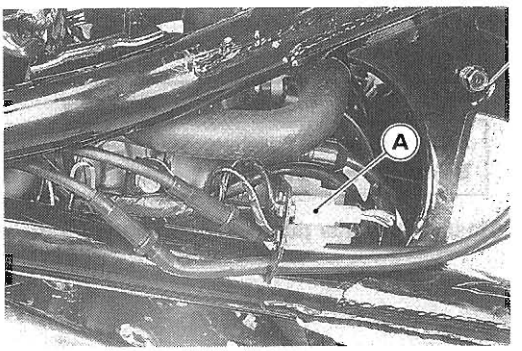

- Remove the mounting bolt [A].
- Lift up the radiator to clear the stoppers.
- Remove the radiator.

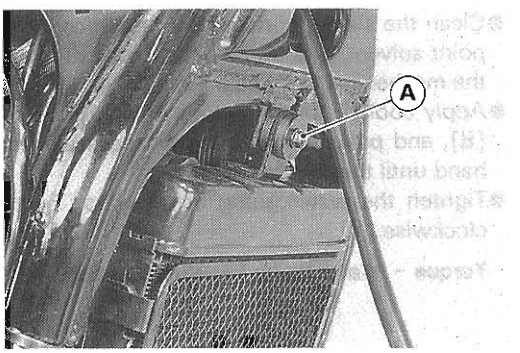

Radiator Cap Inspection

- Check the condition of the top and bottom valve seals of the radiator cap.

★If any one of them shows visible damage, replace the cap.
  Bottom Valve Seal [A]
  Top Valve Seal [B]
  Valve Spring [C]

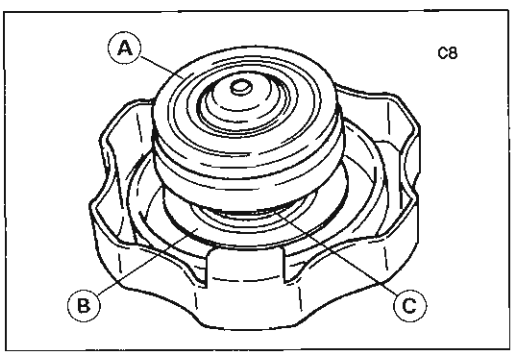

- Install the cap [A] on a cooling system pressure tester [B].

NOTE

○*Wet the cap sealing surfaces with water or coolant to prevent pressure leaks.*

- Watching the pressure gauge, slowly pump the pressure tester to build up the pressure. The relief valve opens, indicated by the gauge hand flicks downward. The relief valve must open within the relief pressure range in the table below and the gauge hand must remain within the specified range at least 6 seconds.

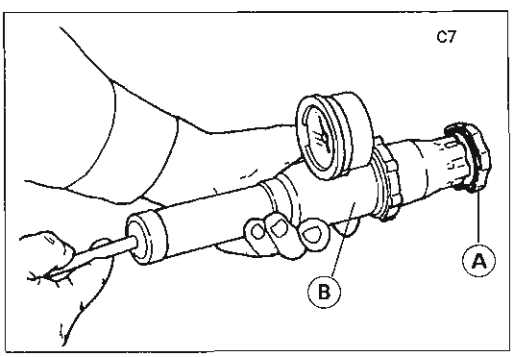

Radiator Cap Relief Pressure

Standard: **93 ~ 123 kPa (0.95 ~ 1.25 kg/cm^2, 14 ~ 18 psi) for 6 seconds**

★If the cap holds too much pressure, or if the cap cannot hold the specified pressure, replace it with a new one.

Thermostat

Removal

● Remove:
Surge Tank (see Fuel System chapter)
Coolant : Drain about 200 mL
Four Hoses [A]
Bracket Bolts [B]

● Remove the thermostat housing [C] along with the bracket.

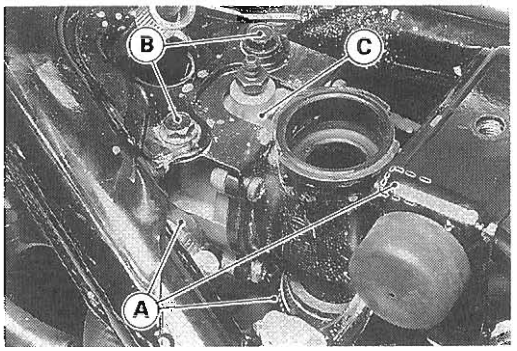

● Remove the screws [A], take off the cap [B], and take out the thermostat.

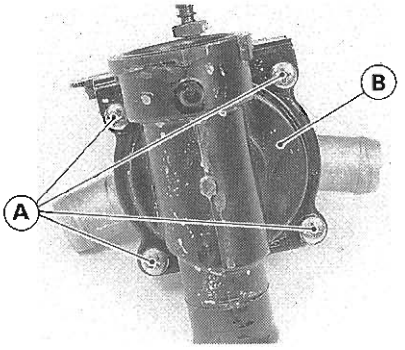

Engine Top End

4

Table of Contents

Exploded View 4-2
Specifications 4-5
Clean Air System 4-8
  Air Suction Valve Removal 4-8
  Air Suction Valve Installation 4-8
  Vacuum Switch Valve Removal 4-8
  Vacuum Switch Valve Installation 4-8
  Air Suction Valve Inspection ..... *
  Vacuum Switch Valve Test 4-9
  Clean Air System Hose Inspection 4-9
Camshaft Chain Tensioner 4-10
  Removal 4-10
  Installation 4-10
Rocker Case Cover 4-12
  Removal ..... *
  Installation 4-12
  Assembly 4-12
Rocker Shafts, Rocker Arms, Rocker Case 4-13
  Removal ..... *
  Rocker Case Installation 4-13
HLA (Hydraulic Lash Adjuster) ..... *
  HLA Removal ..... *
  HLA Installation ..... *
  HLA Air Bleeding ..... *
  Inspection ..... *
Camshafts 4-14
  Removal ..... *
  Installation (Including Chain Timing Procedure) 4-14
  Camshaft Sprocket Assembly ..... *
  Camshaft, Rocker Case Wear ..... *
  Camshaft Chain Wear ..... *
KACR (Kawasaki Automatic Compression Release) ..... *
  Removal ..... *
  Installation ..... *
  Inspection ..... *
Cylinder Head 4-15
  Cylinder Compression Measurement 4-15
  Removal ..... *
  Installation 4-16
Valves ..... *
  Valve Clearance Adjustment ..... *
  Valve Removal ..... *
  Valve Installation ..... *
  Valve Guide Removal ..... *
  Valve Guide Installation ..... *
  Valve Face Contact Inspection ..... *
  Valve Seat Outside Diameter ..... *
  Valve Seat Width Inspection ..... *
  Valve Seat Repair (Valve Lapping) ..... *
  Measuring Valve-to-Guide Clearance (Wobble Method) ..... *
Cylinders, Pistons 4-17
  Cylinder Removal ..... *
  Cylinder Installation 4-17
  Piston Removal ..... *
  Piston Installation 4-18
  Cylinder Wear ..... *
  Piston Wear ..... *
  Piston Ring, Piston Ring Groove Wear ..... *
  Piston Ring End Gap ..... *
Muffler 4-19
  Front Exhaust Pipe Removal 4-19
  Rear Exhaust Pipe Removal 4-19
  Front Muffler Removal 4-20
  Rear Muffler Removal 4-20
  Chamber Removal 4-20
  Chamber Installation 4-21
  Muffler Installation 4-21

(*): Refer to Base Manual.

Exploded View

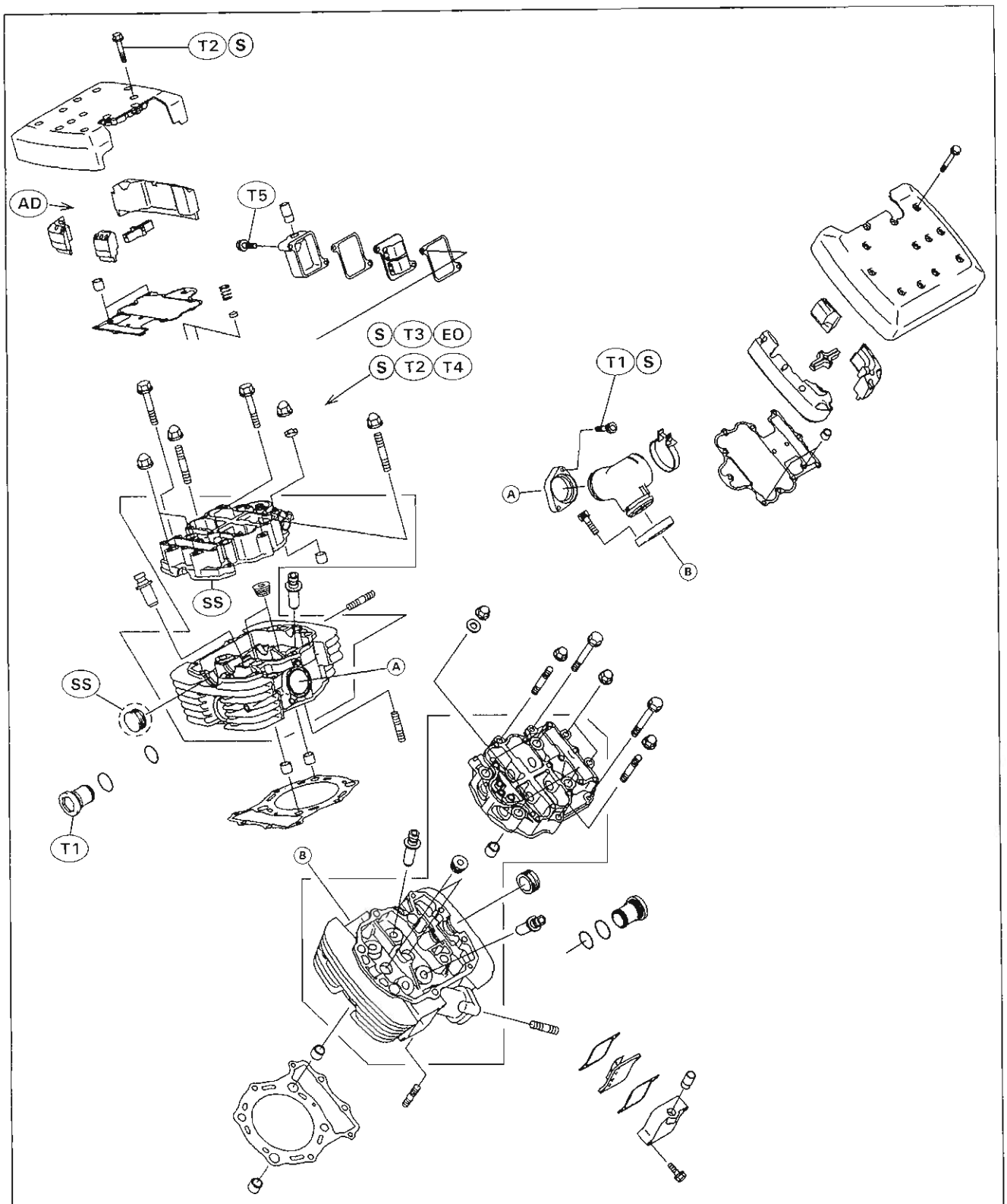

AD: Apply adhesive.
EO: Apply engine oil to the threads and seating surface of 12 mm nuts.
S: Follow the specific tightening sequence.
SS: Apply silicone sealant.
(Kawasaki Bond: 56019-120)

T1: 12 N-m (1.2 kg-m, 104 in-lb)
T2: 8.8 N-m (0.90 kg-m, 78 in-lb)
T3: 12 mm, 78 N-m (8.0 kg-m, 58 ft-lb)
T4: 8 mm, 25 N-m (2.5 kg-m, 18.0 ft-lb)
T5: 4.9 N-m (0.50 kg-m, 43 in-lb)

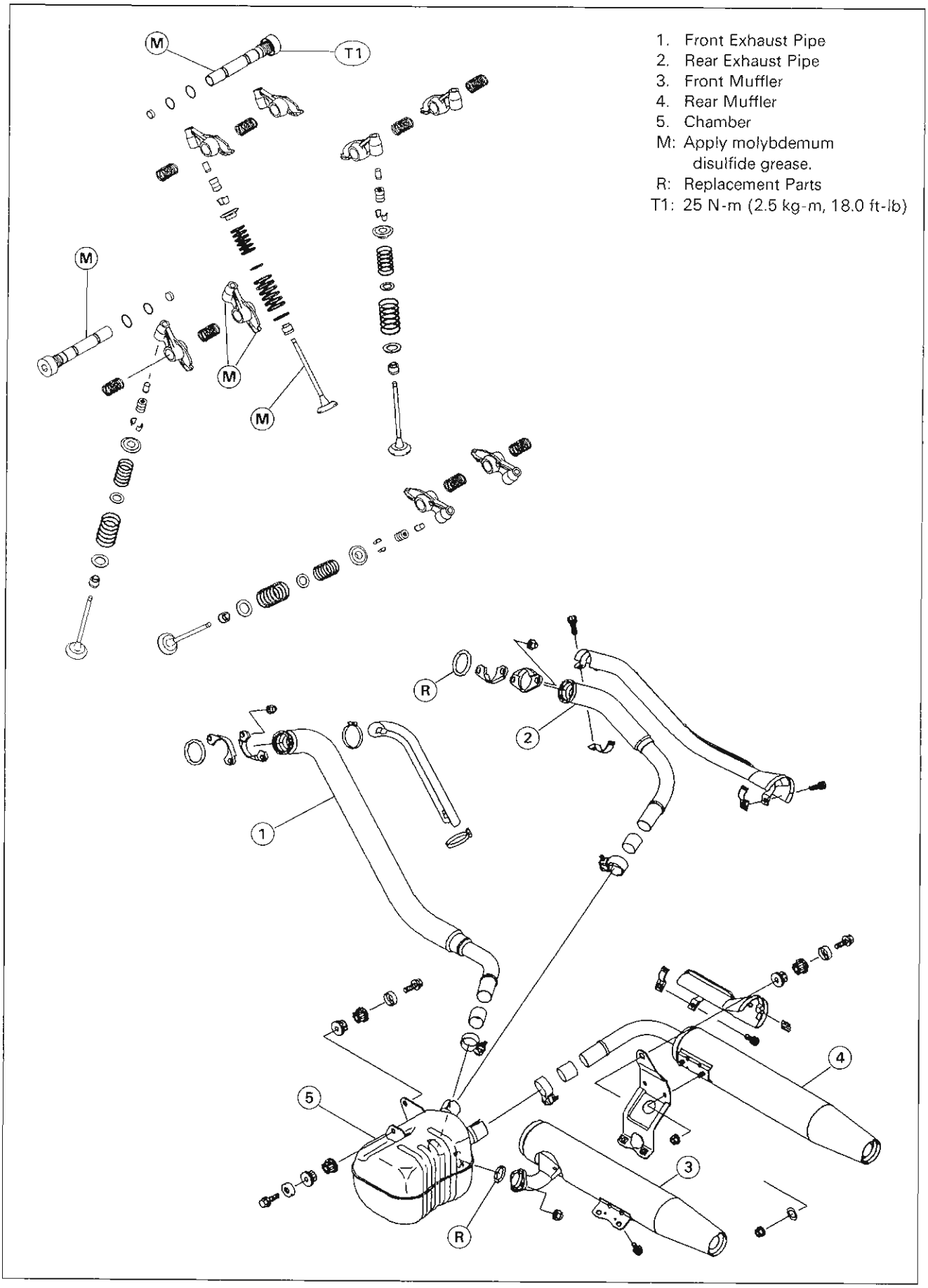
1. Front Exhaust Pipe
2. Rear Exhaust Pipe
3. Front Muffler
4. Rear Muffler
5. Chamber
M: Apply molybdemum disulfide grease.
R: Replacement Parts
T1: 25 N-m (2.5 kg-m, 18.0 ft-lb)
M
T1
M
M
M
R
2
1
5
4
3
R

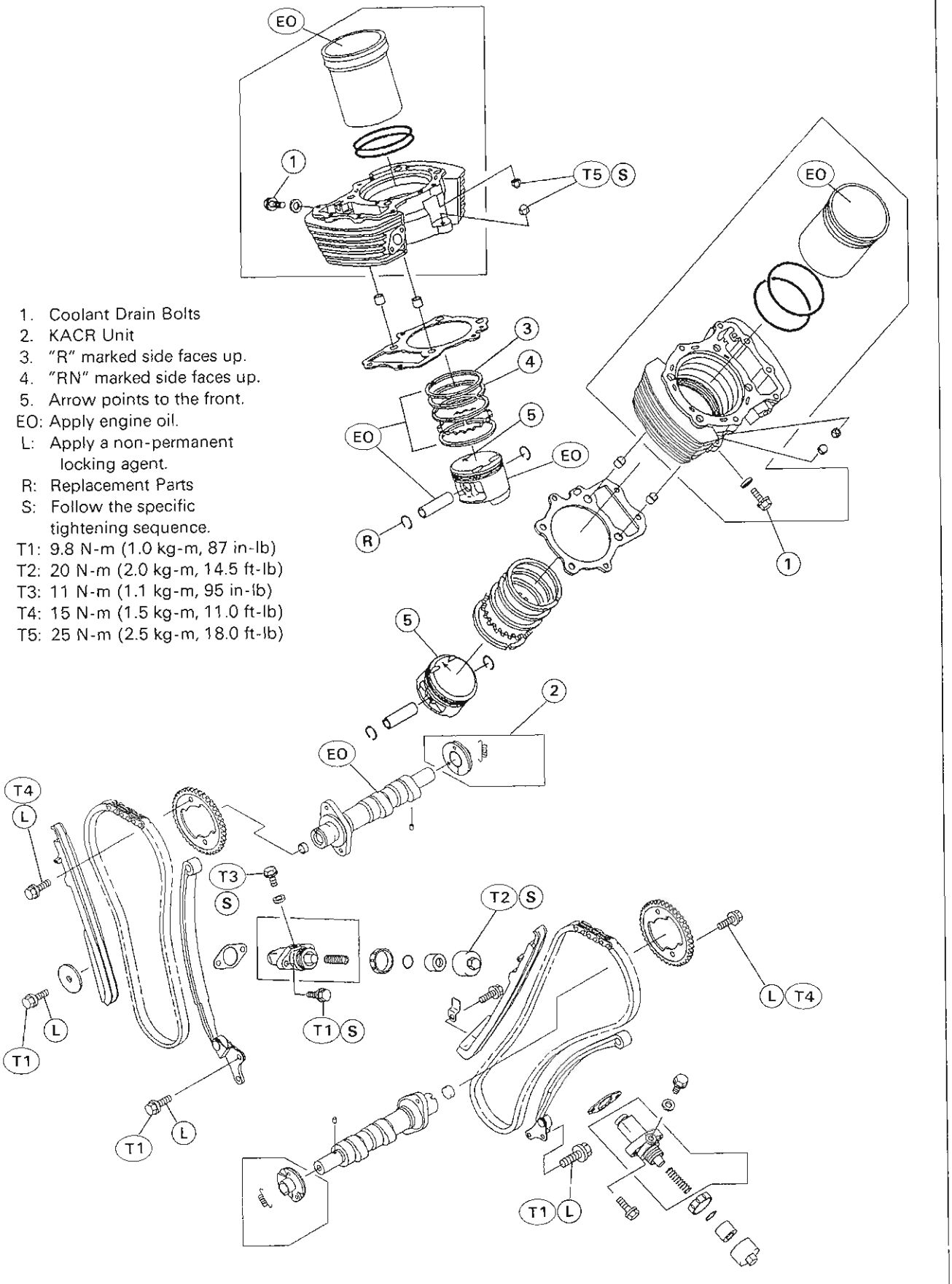
1. Coolant Drain Bolts
2. KACR Unit
3. "R" marked side faces up.
4. "RN" marked side faces up.
5. Arrow points to the front.
EO: Apply engine oil.
L: Apply a non-permanent locking agent.
R: Replacement Parts
S: Follow the specific tightening sequence.
T1: 9.8 N-m (1.0 kg-m, 87 in-lb)
T2: 20 N-m (2.0 kg-m, 14.5 ft-lb)
T3: 11 N-m (1.1 kg-m, 95 in-lb)
T4: 15 N-m (1.5 kg-m, 11.0 ft-lb)
T5: 25 N-m (2.5 kg-m, 18.0 ft-lb)
EO
T5
S
1
3
4
5
R
2
T4
L
T3
T2
T1

Specifications

Item		Standard	Service Limit
Clean Air System:			
Vacuum switch valve closing pressure:		Open → Close 57 ~ 65 kPa (430 ~ 490 mm Hg)	- - -
Camshafts:			
Cam height:	Exhaust	33.36 ~ 33.46 mm	33.26 mm
	Exhaust (ST)	33.48 ~ 33.60 mm	33.38 mm
	Inlet	33.48 ~ 33.60 mm	33.38 mm
	Inlet (ST)	33.80 ~ 33.92 mm	33.70 mm
Camshaft, camshaft cap clearance	Φ25	0.020 ~ 0.062 mm	0.15 mm
	Φ17	0.016 ~ 0.055 mm	0.14 mm
Camshaft journal diameter,	Φ25	24.959 ~ 24.980 mm	24.93 mm
Camshaft bearing inside diameter,	Φ25	25.000 ~ 25.021 mm	25.08 mm
Camshaft journal diameter,	Φ17	16.966 ~ 16.984 mm	16.93 mm
Camshaft bearing inside diameter,	Φ17	17.000 ~ 17.021 mm	17.08 mm
Camshaft runout		TIR 0.02 mm or less	TIR 0.1 mm
Camshaft chain 20-link length		127.0 ~ 127.4 mm	128.9 mm
Rocker arm inside diameter		16.000 ~ 16.018 mm	16.05 mm
Rocker shaft diameter		15.966 ~ 15.984 mm	15.94 mm
Cylinder Head:			
Cylinder compression (Usable range)		685 ~ 1080 kPa (7.0 ~ 11.0 kg/cm², 100 ~ 156 psi) @300 r/min (rpm) by electric starter	- - -
Cylinder head warp		- - -	0.05 mm
Valves:			
Valve head thickness:	Exhaust	0.9 ~ 1.1 mm	0.5 mm
	Inlet	0.9 ~ 1.1 mm	0.5 mm
Valve stem bend		TIR 0.01 mm or less	TIR 0.05 mm
Valve stem diameter:	Exhaust	6.955 ~ 6.970 mm	6.94 mm
	Inlet	6.965 ~ 6.980 mm	6.95 mm
Valve guide inside diameter	Exhaust	7.000 ~ 7.015 mm	7.08 mm
	Inlet	7.000 ~ 7.015 mm	7.08 mm
Valve/valve guide clearance (wobble method):	Exhaust	0.08 ~ 0.16 mm	0.30 mm
	Inlet	0.05 ~ 0.13 mm	0.27 mm
Valve seat cutting angle		45°, 32°, 55°	- - -

(ST): Switzerland

Cam Height

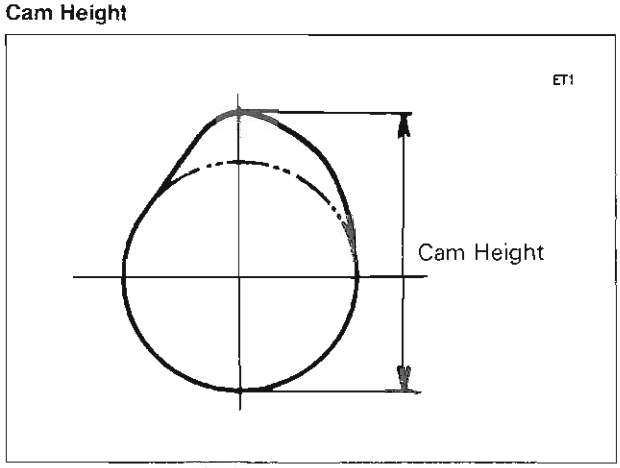

Camshaft Journals and Runout

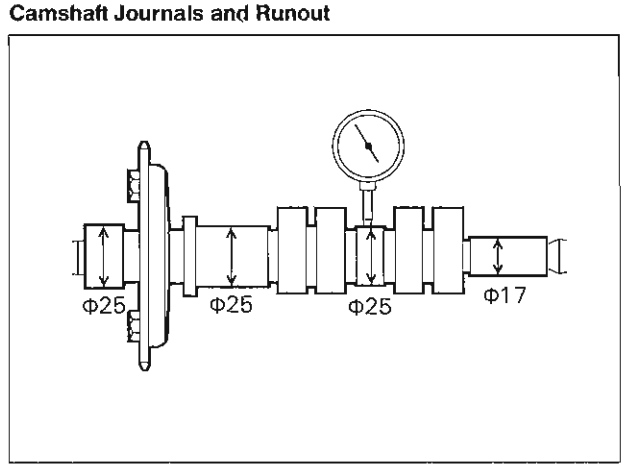

Item		Standard	Service Limit
Valve seat surface:			
Outside diameter:	Exhaust	28.9 ~ 29.1 mm	– – –
	Inlet	31.9 ~ 32.1 mm	– – –
Width:	Exhaust	0.5 ~ 1.0 mm	– – –
	Inlet	0.5 ~ 1.0 mm	– – –
Valve spring free length:			
	Outer (EX, IN)	42.3 mm	40.7 mm
	Inner (EX, IN)	37.8 mm	36.4 mm
Cylinder, Piston:			
Cylinder inside diameter		102.000 ~ 102.012 mm	102.10 mm
Piston diameter		101.942 ~ 101.957 mm	101.79 mm
Piston/cylinder clearance		0.043 ~ 0.070 mm	– – –
Oversize piston and rings		+0.5 mm	– – –
Piston ring/groove clearance:	Top	0.035 ~ 0.070 mm	0.17 mm
	Second	0.02 ~ 0.06 mm	0.16 mm
Piston ring groove width:	Top	1.025 ~ 1.040 mm	1.12 mm
	Second	1.21 ~ 1.23 mm	1.31 mm
Piston ring thickness:	Top	0.97 ~ 0.99 mm	0.9 mm
	Second	1.17 ~ 1.19 mm	1.10 mm
Piston ring end gap:	Top	0.30 ~ 0.40 mm	0.70 mm
	Second	0.40 ~ 0.55 mm	0.85 mm
	Oil	0.3 ~ 0.9 mm	1.2 mm

Valve Head Thickness

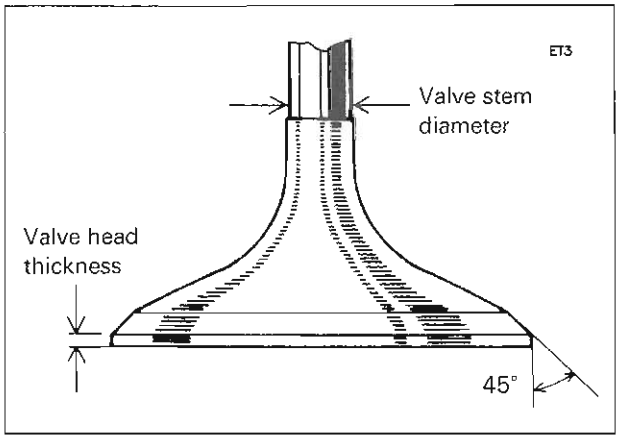

Valve Stem Bend

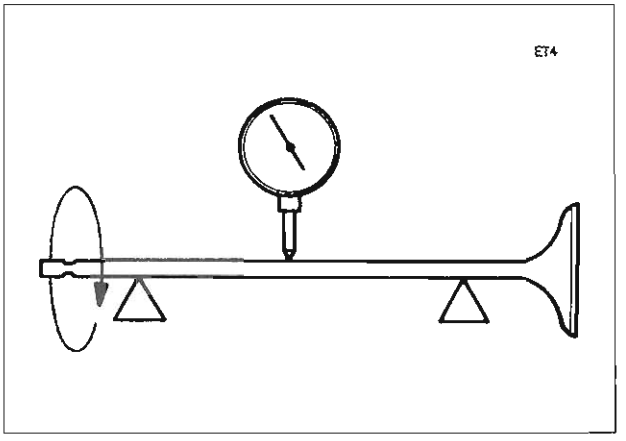

Special Tools – **Fork Oil Level Gauge: 57001-1290**
Vacuum Gauge: 57001-1369
Spark Plug Wrench, Hex 18: 57001-1024
Compression Gauge: 57001-221
Compression Gauge Adapter, M12 x 1.25: 57001-1018
Valve Spring Compressor Assembly: 57001-241
Valve Spring Compressor Adapter, Φ28.2: 57001-243
Valve Guide Arbor, Φ7: 57001-163
Valve Guide Reamer, Φ7: 57001-162
Valve Seat Cutter Holder, Φ7: 57001-1126
Valve Seat Cutter Holder Bar: 57001-1128
Valve Seat Cutter, 45° – Φ32: 57001-1115
Valve Seat Cutter, 32° – Φ35: 57001-1121
Valve Seat Cutter, 55° – Φ35: 57001-1247
Piston Ring Compressor Grip: 57001-1095
Piston Ring Compressor Belt, Φ95 ~ Φ108: 57001-1358
Piston Pin Puller Assembly: 57001-910
Hexagon Wrench, Hex 27: 57001-1210

○ Compression Gauge Adapter: 57001-1183 and Valve Seat Cutter: 57001-1199 can also be used.

Sealant – **Kawasaki Bond (Silicone Sealant): 56019-120**

Clean Air System

Air Suction Valve Removal

- For rear air suction valve removal, remove the choke knob [A] and the rear exhaust pipe (see this chapter).
- Remove the hose [B].
- Unscrew the mounting bolts [C] and remove the air suction valve [D].

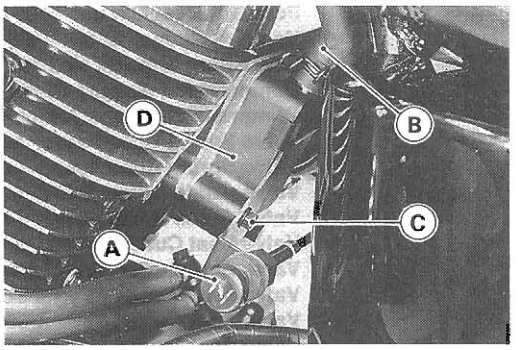

Air Suction Valve Installation

- Replace the gasket with a new one.
- Install the air suction valve so that its wider side [A] of the reed faces left.

Torque – Air Suction Valve Cover Bolts: 4.9 N-m (0.50 kg-m, 43 in-lb)

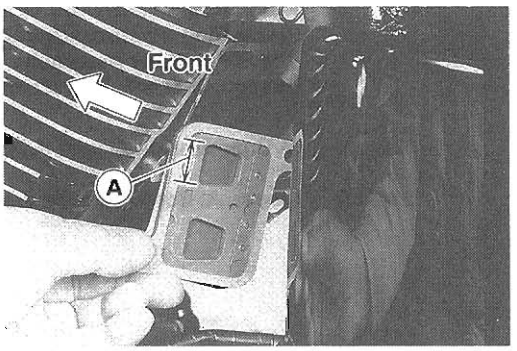

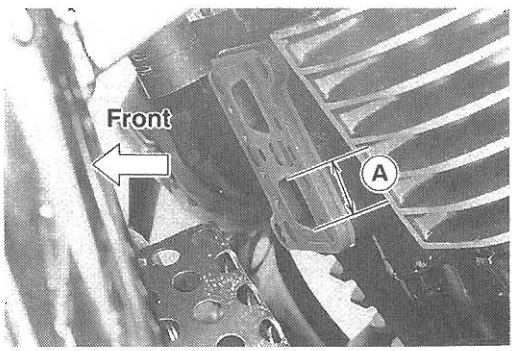

Vacuum Switch Valve Removal

- Remove the surge tank (see Fuel System chapter).
- Pull off the hoses [A] and take out the vacuum switch valve [B].

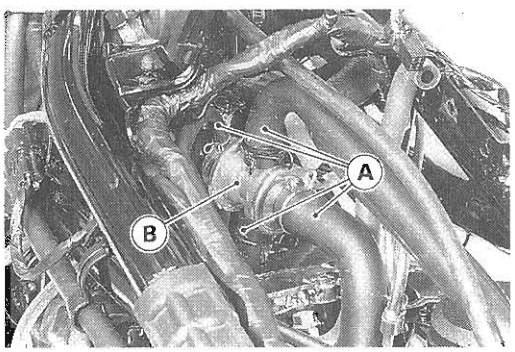

Vacuum Switch Valve Installation

- Install the vacuum switch valve so that the air hole [A] faces downwards.
- Route the hoses correctly (see General Information chapter).

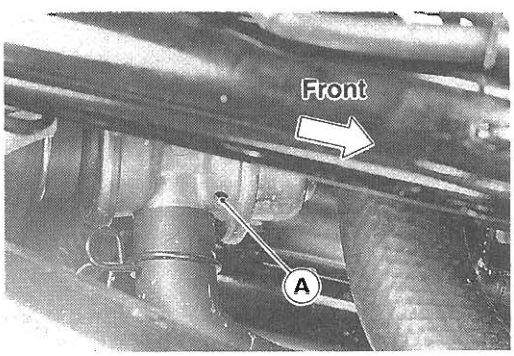

Vacuum Switch Valve Test

- Remove the fuel tank (see Fuel System chapter).
- Remove the vacuum switch valve.
- Connect the vacuum gauge [A] and syringe [B] (or fork oil level gauge) to the vacuum hoses as shown.

Special Tools – Vacuum Gauge: 57001-1369
Fork Oil Level Gauge: 57001-1290

Air Flow [C]

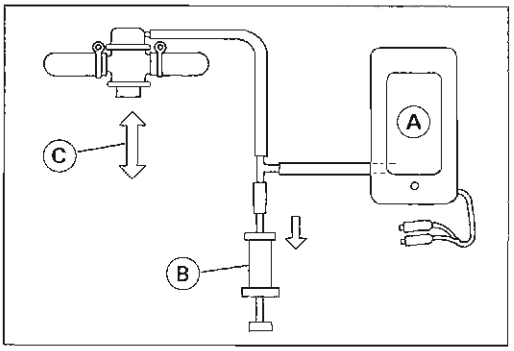

- Gradually raise the vacuum (lower the pressure) applied to the vacuum switch valve, and check the valve operation. When the vacuum is low, the vacuum switch valve should permit air to flow. When the vacuum raises to **57 ~ 65 kPa (430 ~ 490 mm Hg)**, it should stop air flow.

★If the vacuum switch valve does not operate as described, replace it with a new one.

NOTE

○*To check air flow through the vacuum switch valve, just blow through the air cleaner hose.*

Vacuum Switch Valve Closing Pressure (Open → Close)
Standard: 57 ~ 65 kPa (430 ~ 490 mm Hg)

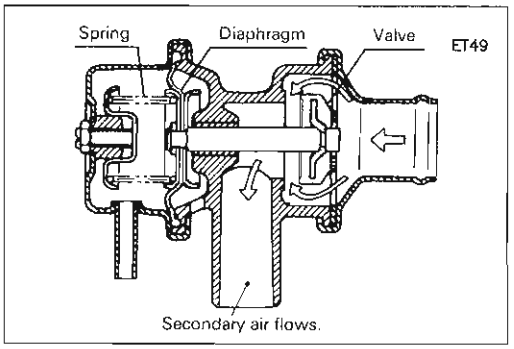

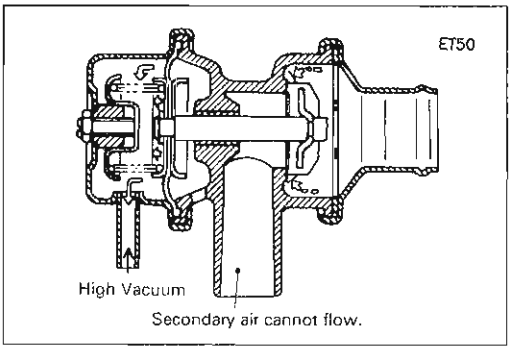

Clean Air System Hose Inspection

- Be certain that all the hoses are routed without being flattened or kinked, and are connected correctly to the air cleaner housing, vacuum switch valve, carburetor and air suction valve covers.

★If they are not, correct them. Replace them if they are damaged.

Clean Air System

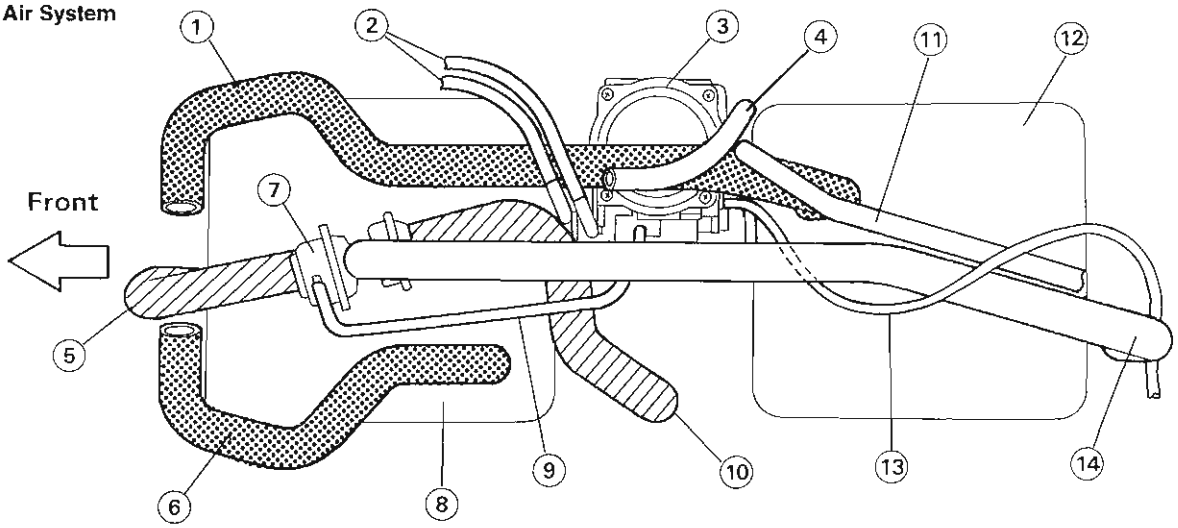

1. Rear Water Hose
2. Throttle Cables
3. Carburetor
4. Fuel Hose
5. To Front Air Suction Valve
6. Front Water Hose
7. Vacuum Switch Valve
8. Front Rocker Case Cover
9. Vacuum Hose
10. To Lower Air Cleaner Duct
11. Air Vent Hose
12. Rear Rocker Case Cover
13. Choke Cable
14. To Rear Air Suction Valve

Camshaft Chain Tensioner

Removal

CAUTION

This is a non-return type cam chain tensioner. The push rod does not return to its original position once it moves out to take up camshaft chain slack. Observe all the rules listed below:
When removing the tensioner, do not take out the mounting bolts only halfway. Retightening the mounting bolts from this position could damage the tensioner and the camshaft chain. Once the bolts are loosened, the tensioner must be removed and reset as described in "Camshaft Chain Tensioner Installation".
Do not turn over the crankshaft while the tensioner is removed. This could upset the cam chain timing, and damage the valves.

- For the front chain tensioner, remove the lower air cleaner duct (see Fuel System chapter).
- Loosen the lockbolt [A] and remove the tensioner cap [B].
- Remove the tensioner mounting bolts [C] and take off the chain tensioner.

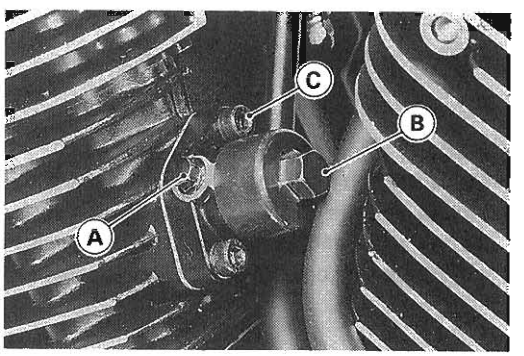

Installation

- Push the stopper [A] to release the ratchet and push the push rod [B] into the tensioner body.

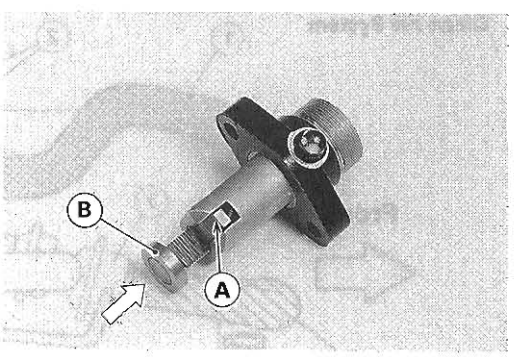

- Install the larger spring [A], and then the ball bearing assy [B].
  - Fit the ball bearing assy into the body until it bottoms out, using a thin-bladed screwdriver.

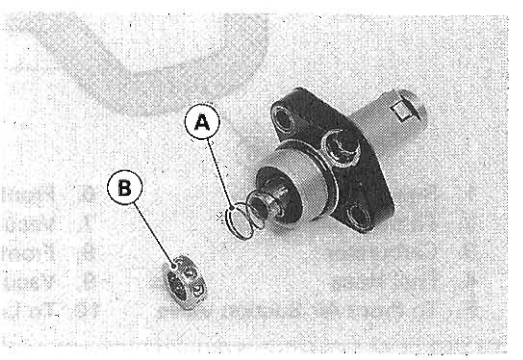

● Screw in the lockbolt [A] finger-tight to hold the ball bearing assy.
● Install the retainer [B].

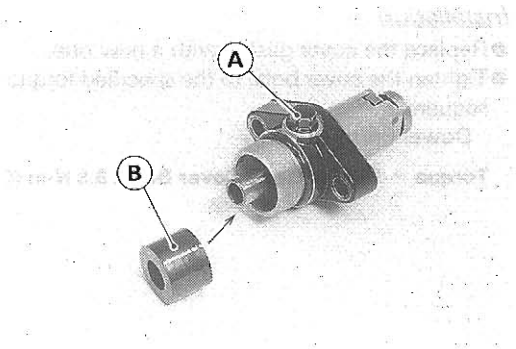

● Install the tensioner body [A] and tighten the mounting bolts [B] to the specified torque.

Torque – Chain Tensioner Mounting Bolts: 9.8 N-m (1.0 kg-m, 87 in-lb)

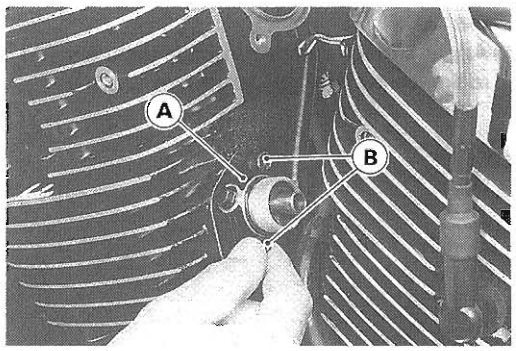

● Install the smaller spring [A] and the tensioner cap [B].
● Tighten the tensioner cap to the specified torque.

Torque – Chain Tensioner Cap: 20 N-m (2.0 kg-m, 14.5 ft-lb)

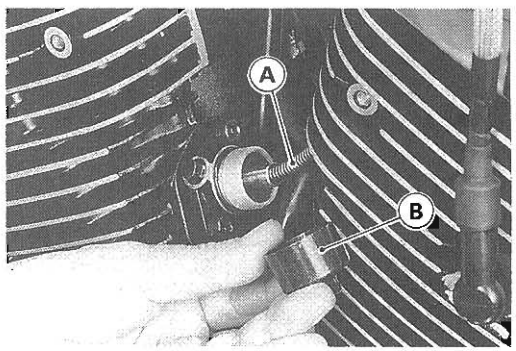

● Loosen the lockbolt [A] and check to be sure that the larger spring clicks, then tighten the lockbolt.

Torque – Chain Tensioner Lockbolt: 11 N-m (1.1 kg-m, 95 in-lb)

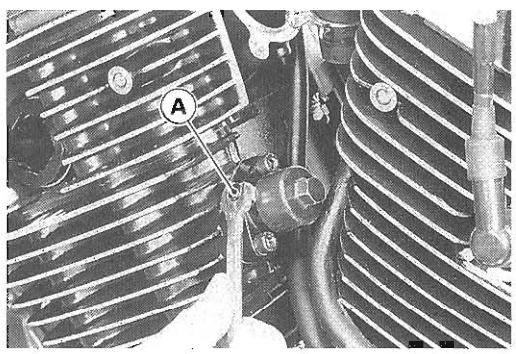

Rocker Case Cover

Installation

- Replace the cover gasket with a new one.
- Tighten the cover bolts to the specified torque following the tightening sequence.

  Dowel Pins [A]

Torque – Rocker Case Cover Bolts: 8.8 N-m (0.90 kg-m, 78 in-lb)

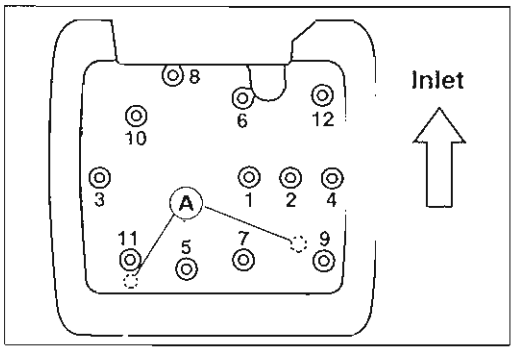

Assembly

- Apply adhesive to the rubber dampers [A] and install them on the rocker case cover [B] as shown.

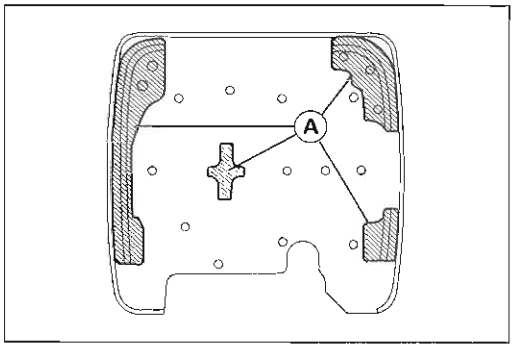

Rocker Shafts, Rocker Arms, Rocker Case

Rocker Case Installation

CAUTION
The cylinder head and rocker case are machined in the assembled state, so they must be used as a set.

● Install the rocker arms [A] and retaining springs [B] on each rocker shaft as shown.
○ The exhaust rocker arm [C] on the chain tunnel side is different from the others.

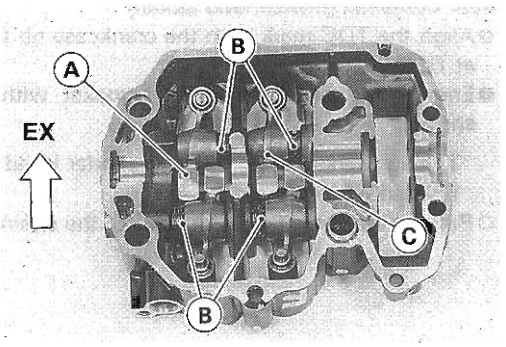

● Before installing the rocker shaft, be sure the O-rings are in place.
○ Tighten the rocker shafts to the specified torque.

Torque – Rocker Shafts: 25 N-m (2.5 kg-m, 18.0 ft-lb)

● Apply silicone sealant [A] to the rocker case mating surface and the outer circumference of the plugs as shown.

Sealant – Kawasaki Bond (Silicone Sealant): 56019-120

○ Do not apply silicone sealant around the camshaft bearing.

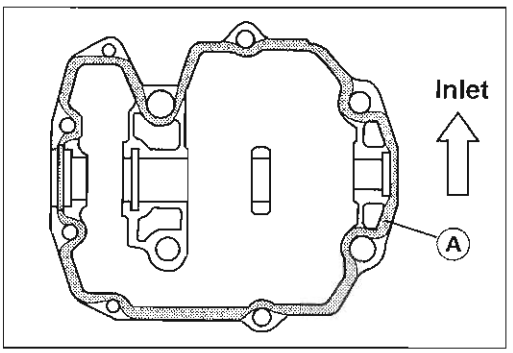

● Apply engine oil to both sides of the rocker case Φ12 mm nuts and washers.
● Tighten the rocker case bolts and nuts temporarily following the tightening sequence shown, and then tighten them to the specified torque.

Torque – Rocker Case Nuts Φ12 mm: 78 N-m (8.0 kg-m, 58 ft-lb)
Rocker Case Nuts Φ8 mm: 25 N-m (2.5 kg-m, 18.0 ft-lb)
Rocker Case Bolts Φ6 mm: 8.8 N-m (0.90 kg-m, 78 in-lb)

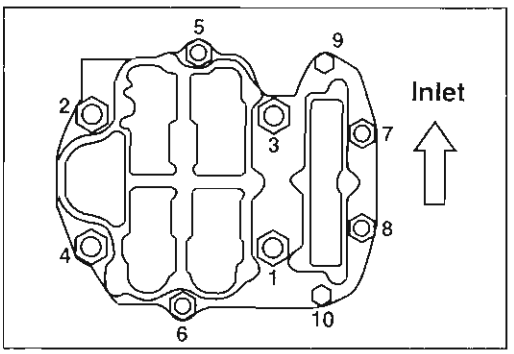

● Replace the oil filters [A] with new ones.
● After installing the rocker case, fill the oil reservoir [B] with engine oil.
● Tighten:

Torque – Oil Hose Flange Bolts: 9.8 N-m (1.0 kg-m, 87 in-lb)

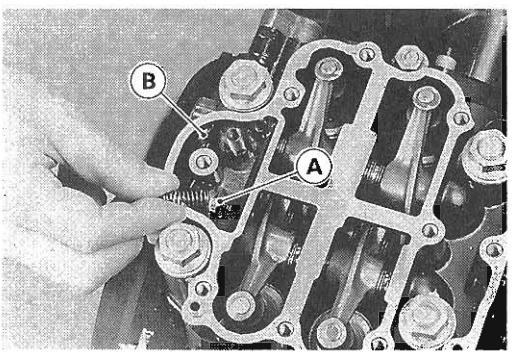

Camshafts

Installation (Including Cahain Timing Procedure)

Refer to p. 4-13 of the Base Manual, noting that the Switzerland model has different chain timing.

Rear Camshaft (Switzerland Model)

- Align the TDC mark with the crankcase rib to position the rear piston at TDC.
- Engage the camshaft chain sprocket with the camshaft chain as shown.

Timing Marks [A] Cylinder Head Upper Surface [C]
R Mark [B]

- Pull the tension side (front side) of the chain taut to install the chain.

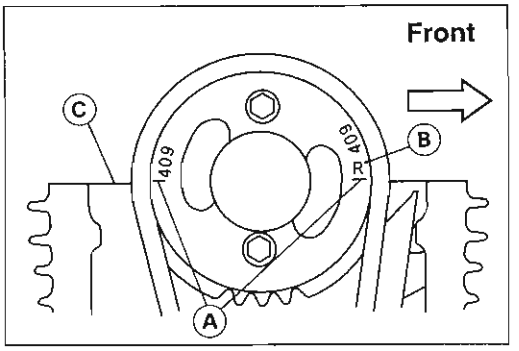

Front Camshaft (Switzerland Model)

- Align the TDC mark with the crankcase rib to position the front piston at TDC.
- Engage the camshaft chain sprocket with the camshaft chain as shown.

Timing Marks [A] Cylinder Head Upper Surface [C]
F Mark [B]

- Pull the tension side (front side) of the chain taut to install the chain.

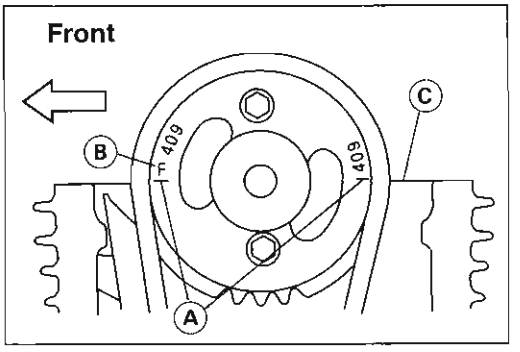

Cylinder Head

Cylinder Compression Measurement

NOTE

○*Use the battery which is fully charged.*

- Warm up the engine thoroughly.
- Stop the engine.
- Remove one spark plug and attach the compression gauge and adapter firmly into the spark plug hole. Do not remove the other spark plug, only the plug lead.
- For the other cylinder, remove both spark plugs.

Special Tools – Spark Plug Wrench, Hex 18: 57001-1024 [A]
Compression Gauge: 57001-221 [B]
Compression Gauge Adapter, M12 x 1.25: 57001-1018 [C]

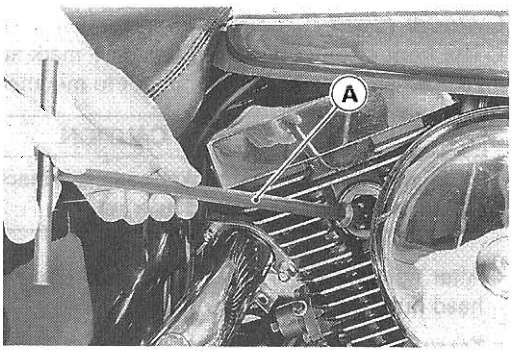

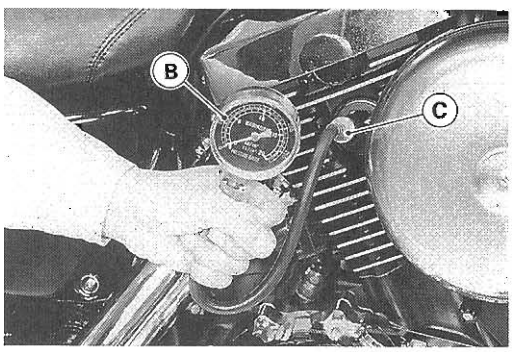

- Using the starter motor, turn the engine over with the throttle fully open until the compression gauge stops rising; the compression is the highest reading obtainable.

Cylinder Compression
Usable Range : 685 ~ 1080 kPa (7.0 ~ 11.0 kg/cm², 100 ~ 156 psi) @300 r/min (rpm)

○The compression gauge adapter: 57001-1183 can also be used.

- Repeat the measurement for the other cylinder.
- Install the spark plugs.

Torque – Spark Plugs : 18 N-m (1.8 kg-m, 13.0 ft-lb)

The following table should be consulted if the obtainable compression reading is not within the usable range.

Problem	Diagnosis	Remedy (Action)
Cylinder compression is higher than usable range	Carbon accumulation on piston and cylinder head, and in combustion chamber possibly due to damaged valve stem oil seal and/or damaged piston oil rings (This may be indicated by white exhaust smoke).	Remove the carbon deposits and replace damaged parts if necessary.
	Incorrect cylinder head gasket thickness.	Replace the gasket with a standard part.
	Damaged or missing compression release cam spring	Replace the spring.
	Compression release weights do not move smoothly.	Replace the compression release unit.
Cylinder compression is lower than usable range	Gas leakage around cylinder head	Replace damaged gasket and check cylinder head warp.
	Bad condition of valve seating	Repair if necessary.
	HLA seizure.	Replace the HLA.
	Incorrect piston/cylinder clearance	Replace the piston and/or cylinder
	Piston seizure.	Inspect the cylinder and liner and replace/repair the cylinder and/or piston as necessary.
	Bad condition of piston ring and/or piston ring grooves.	Replace the piston and/or the piston rings.
	Compression release weights do not move smoothly.	Replace the compression release unit.

Cylinder Head Installation

○The front cylinder head [A] has an **F** mark and the rear cylinder head [B] has an **R** mark. Be careful not to mix them up.

CAUTION
The cylinder head and rocker case are machined in the assembled state, so they must be used as a set.

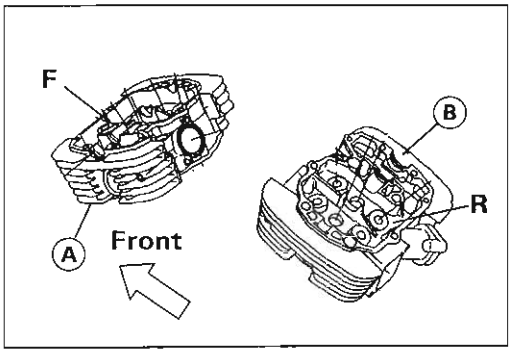

●After tightening the rocker case nuts and bolts, tighten the cylinder head nuts and the cylinder nuts.

Torque – Cylinder Head Nuts: 25 N-m (2.5 kg-m, 18.0 ft-lb)
Cylinder Nuts: 25 N-m (2.5 kg-m, 18.0 ft-lb)

Cylinders, Pistons

Cylinder Installation

● Replace the cylinder base gasket with a new one, and install the gaskets aligning the holes with the crankcase water holes [A].

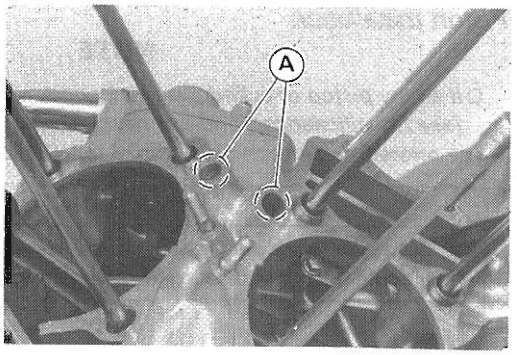

○ The front cylinder [A] has an **F** mark and the rear cylinder [B] has an **R** mark. Be careful not to mix them up.

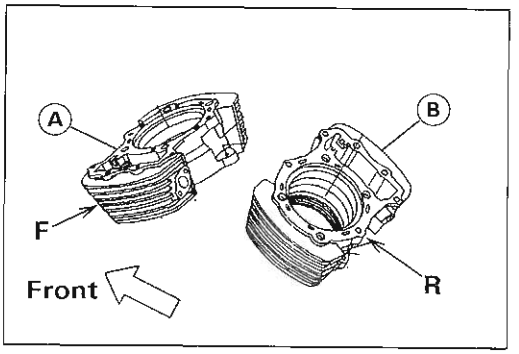

● Start with the rear cylinder.
● Align the TDC mark with the crankcase rib to position the rear piston at TDC.

TDC Mark [A] for Rear Piston
Crankcase Rib [B]
Turn counterclockwise [C]

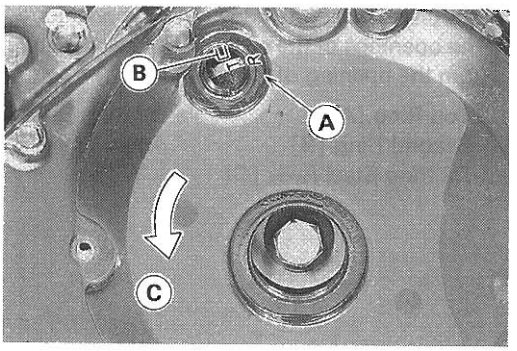

● Oil the piston rings and smear some oil inside the cylinder bore.
● Using the piston ring compressor assembly [A] with the chamfered side [B] upward, install the cylinder block [C].

Special Tools – Piston Ring Compressor Grip: 57001-1095
Piston Ring Compressor Belt, Φ95 ~ Φ108: 57001-1358

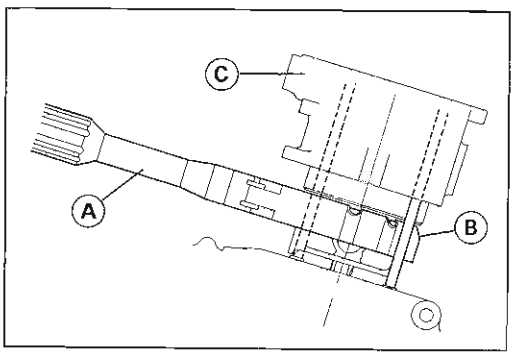

● Install the front cylinder in the same way.
○ Position the front piston at TDC.

○ The front chain guide has an F mark [B] and the rear chain guide has an R mark [C]. Be careful not to mix up the front and rear chain guides [A] since the rear chain guide is longer.
○ Tighten the cylinder nuts temporarily.

NOTE

○ *Tighten the cylinder nuts to the specification (see Exploded View) after tightening the cylinder head nuts to the specified torque.*

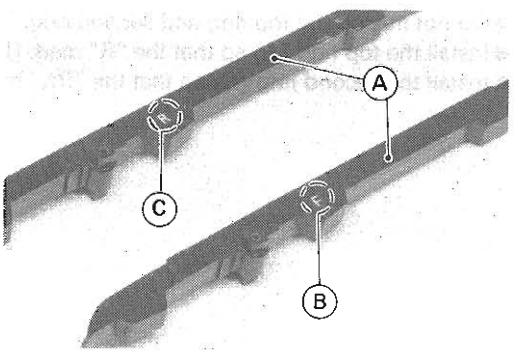

Piston Installation

NOTE

○*If a new piston or cylinder is used, check piston to cylinder clearance (see Specifications), and use new piston ring.*

●The arrow [A] on each piston head must point forward.

CAUTION

Do not reuse snap rings, as removal weakens and deforms them. They could fall out and score the cylinder wall.

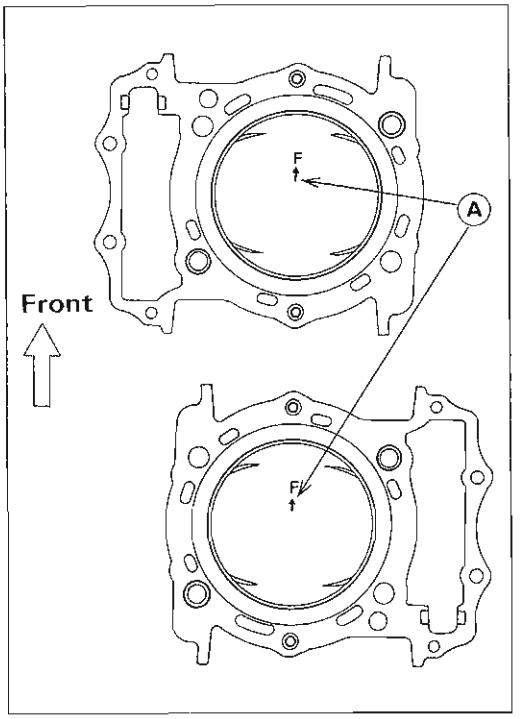

●The piston ring openings must be positioned as shown in the figure. The openings of the oil ring steel rails must be about 30 ~ 45° of angle from the opening of the top ring.

Top Ring [A]
Second Ring [B]
Oil Ring Steel Rails [C]
Oil Ring Expander [D]
Arrow [E]

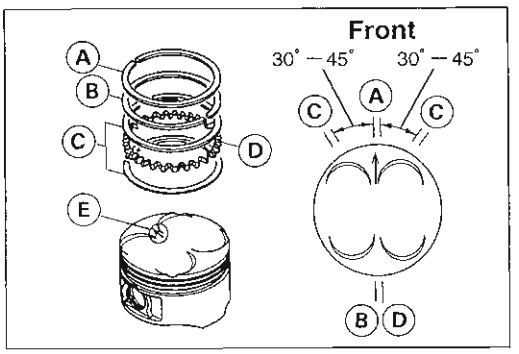

NOTE

○*The oil ring rails have no "top" or "bottom".*

●Install the oil ring expander [A] in the bottom piston ring groove so the ends [B] butt together.

●Install the oil ring steel rails, one above the expander and one below it.

○Spread the rail with your thumbs, but only enough to fit the rail over the piston.

○Release the rail into the bottom piston ring groove.

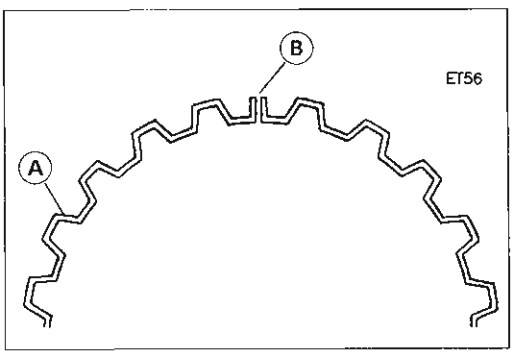

●Do not mix up the top ring and second ring.

●Install the top ring [A] so that the "R" mark [B] faces up.

●Install the second ring [C] so that the "RN" mark [D] faces up.

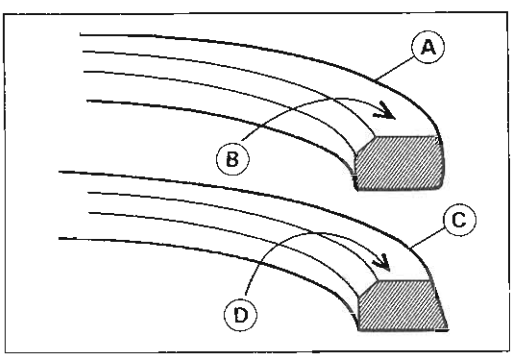

Mufflers

Front Exhaust Pipe Removal

- Loosen the clamp bolts [A] on the exhaust pipe cover [B].
- Detach the upper clamp [C] by sliding it down.
- Detach the lower clamp [D] by sliding it up.
- Remove the exhaust pipe cover.

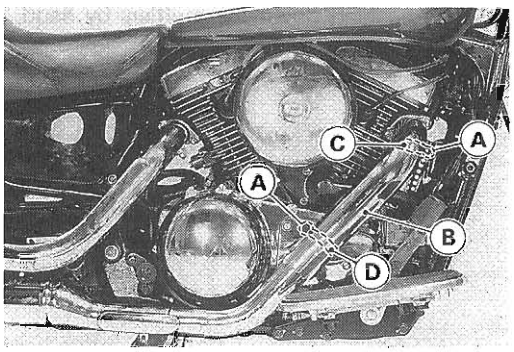

- Remove the regulator/rectifier cover [A] on the left side.
- Loosen the left chamber bolt [B].

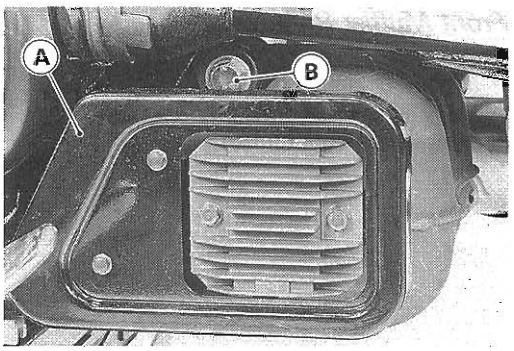

- Remove the lower cover [A].
- Loosen the right chamber bolt [B].
- Remove the rear muffler bolt and nut [C].

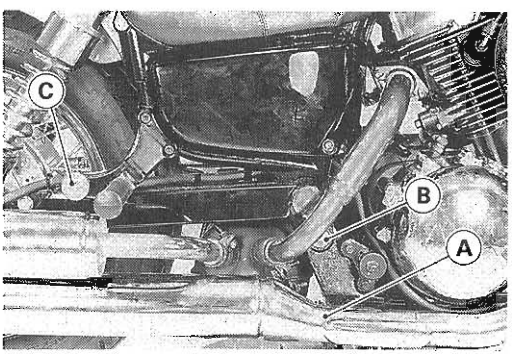

- Loosen:
  Front Footpeg Bolts [A]
  Front Exhaust Pipe Clamp Bolt [B]
- Remove the front exhaust pipe holder nuts [C].
- While raising up the mufflers by hand, take off the front exhaust pipe [D].

○ First, pull off the front end, and then the rear end.

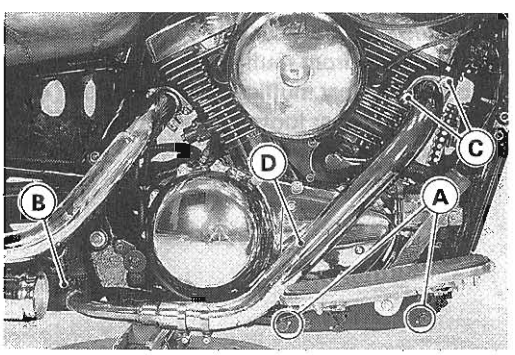

Rear Exhaust Pipe Removal

- Remove the regulator/rectifier cover on the left side and loosen the left chamber bolt.
- Remove:
  Lower Cover [A] Rear Exhaust Pipe Cover [B]
- Loosen:
  Right Chamber Bolt [C]
  Rear Exhaust Pipe Clamp Bolt [D]
  Front Exhaust Pipe Clamp Bolt [E]
- Remove:
  Rear Exhaust Pipe Holder Nuts [F]
  Rear Muffler Bolt and Nut [G]

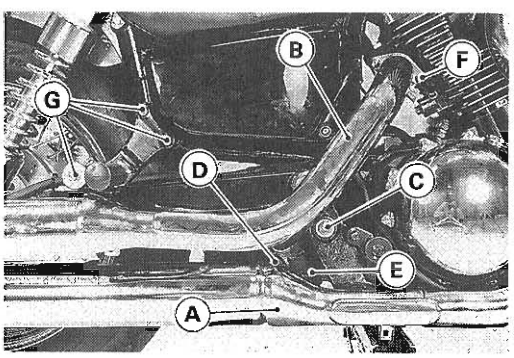

● While pushing down the mufflers by hand, pull off the rear exhaust pipe [A].

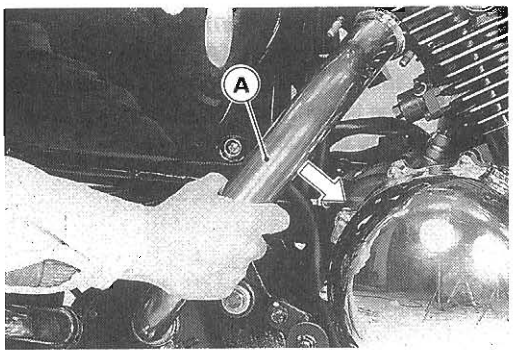

Front Muffler Removal

● Remove:
Chamber Flange Nuts [A]
Muffler Bracket Bolts [B]
● Remove the front muffler [C].

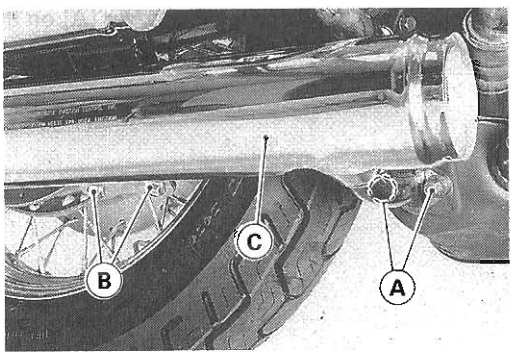

NOTE

○ *If the chamber flange nuts are difficult to remove, spray a penetrating oil on the studs [A] and nuts [B].*

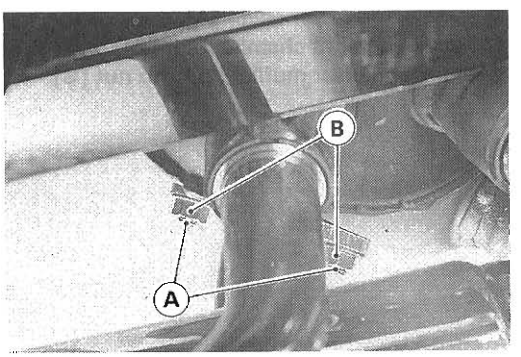

Rear Muffler Removal

● Remove the front muffler (see this chapter).
● Loosen the rear muffler pipe clamp bolt [A].
● Remove the rear footpeg bracket bolts [B].
● Remove the rear muffler [C].

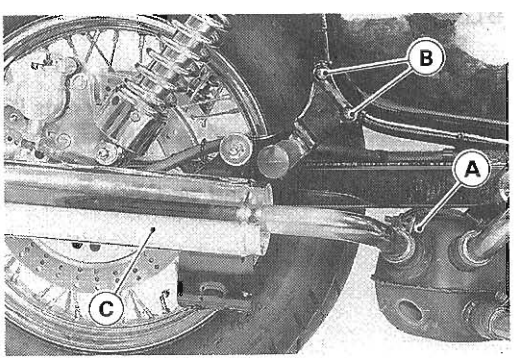

Chamber Removal

● Remove:
Front Exhaust Pipe [A]
Rear Exhaust Pipe [B]
Front and Rear Mufflers [C]
Left and Right Chamber Bolts [D]
● Take out the chamber [E].

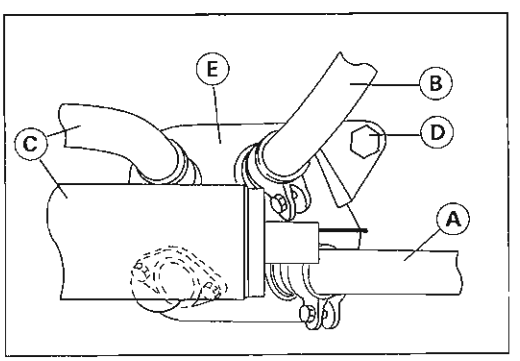

Chamber Installation

- Replace the muffler flange gasket with new ones.
- Install the exhaust clamps [A] with its bolt downward.

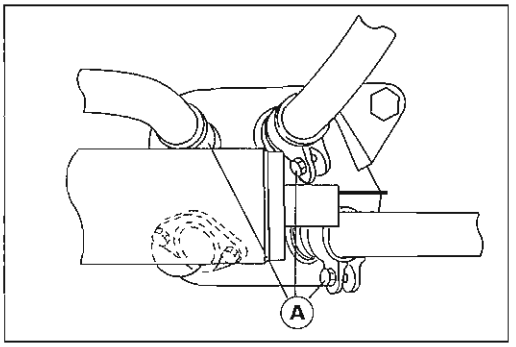

Muffler Installation

- Replace the exhaust pipe holder gasket with new ones.
- Install the rear end [A] of the front exhaust pipe first, and then the front end [B].
- Tighten the front nut of the rear exhaust pipe holder first, and then the rear nut for easy installation.
- First, tighten all the bolts and nuts to a snug fit.
- Secondly, tighten the exhaust pipe holder nuts evenly to avoid exhaust leaks.
- Finally, tighten the rest of the mounting bolts and clamp bolts securely.
- Thoroughly warm up the engine, wait until the engine cools down, and retighten all the clamp bolts.

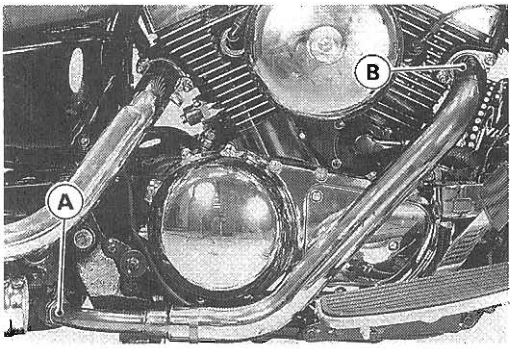

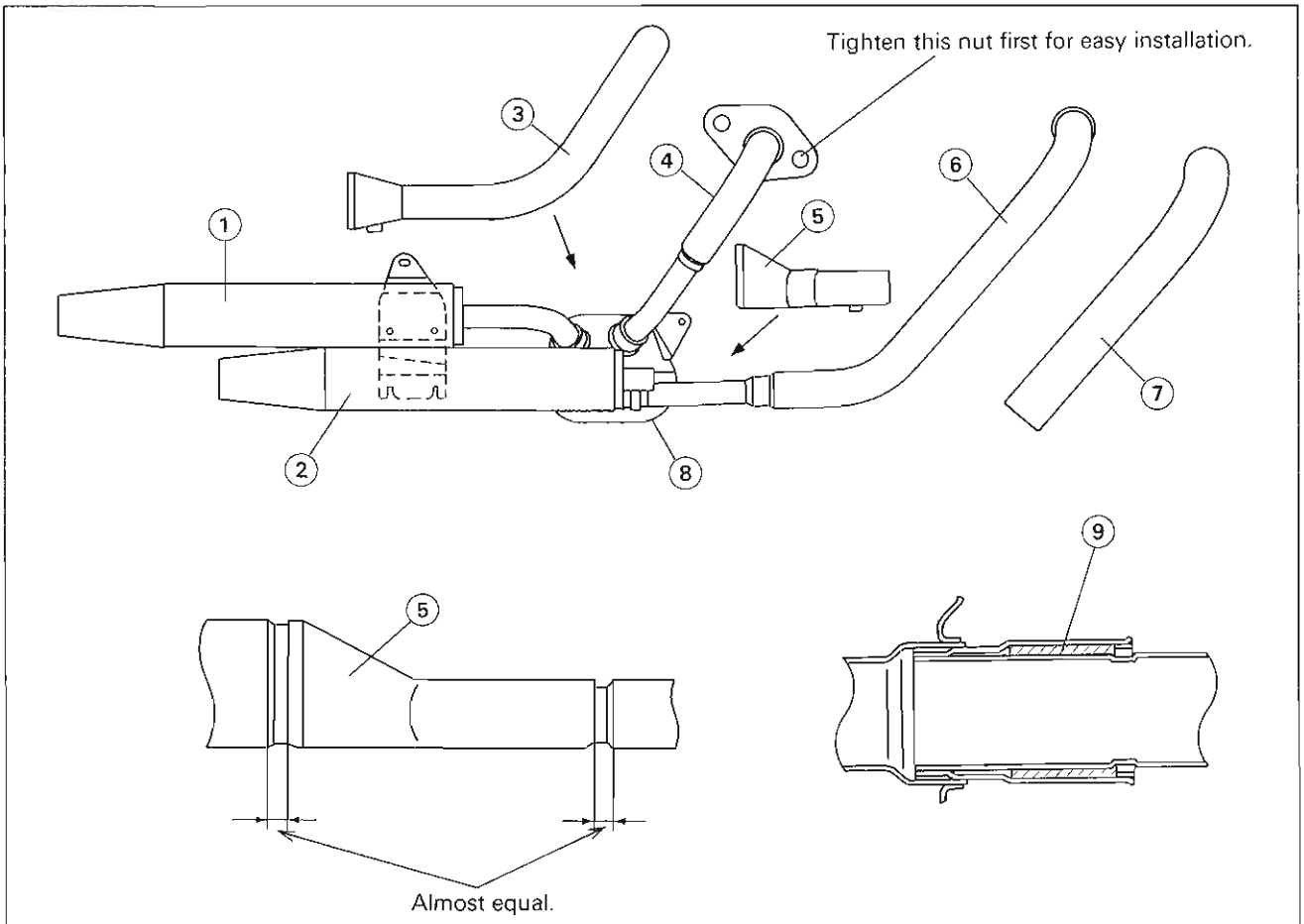

1. Rear Muffler
2. Front Muffler
3. Rear Exhaust Pipe Cover
4. Rear Exhaust Pipe
5. Front Muffler Cover
6. Front Exhaust Pipe
7. Front Exhaust Pipe Cover
8. Chamber
9. Gasket

Clutch

Table of Contents

Exploded View 5-2
Specifications 5-4
Clutch Lever 5-5
  Position Adjustment 5-5
Clutch Fluid ..... *
  Fluid Level Inspection ..... *
  Clutch Fluid Changing ..... *
  Bleeding the Clutch Line ..... *
Master Cylinder 5-6
  Installation 5-6
  Disassembly ..... *
  Assembly ..... *
  Inspection ..... *
Clutch Slave Cylinder 5-7
  Removal ..... *
  Installation 5-7
  Disassembly ..... *
  Assembly ..... *
Clutch Cover 5-8
  Clutch Cover Removal 5-8
Clutch ..... *
  Removal ..... *
  Installation ..... *
  Clutch Inner Hub Disassembly/Assembly ..... *
  Spring Plate Free Play Measurement ..... *
  Clutch Plate Replacement ..... *
  Friction Plate Wear, Damage Inspection ..... *
  Friction and Steel Plate Warp Inspection ..... *
  Clutch Housing Finger Inspection ..... *
  Clutch Hub Spline Inspection ..... *
  Cam Damper Inspection ..... *
  Clutch Spring Height Measurement ..... *

(*): Refer to Base Manual.

Exploded View

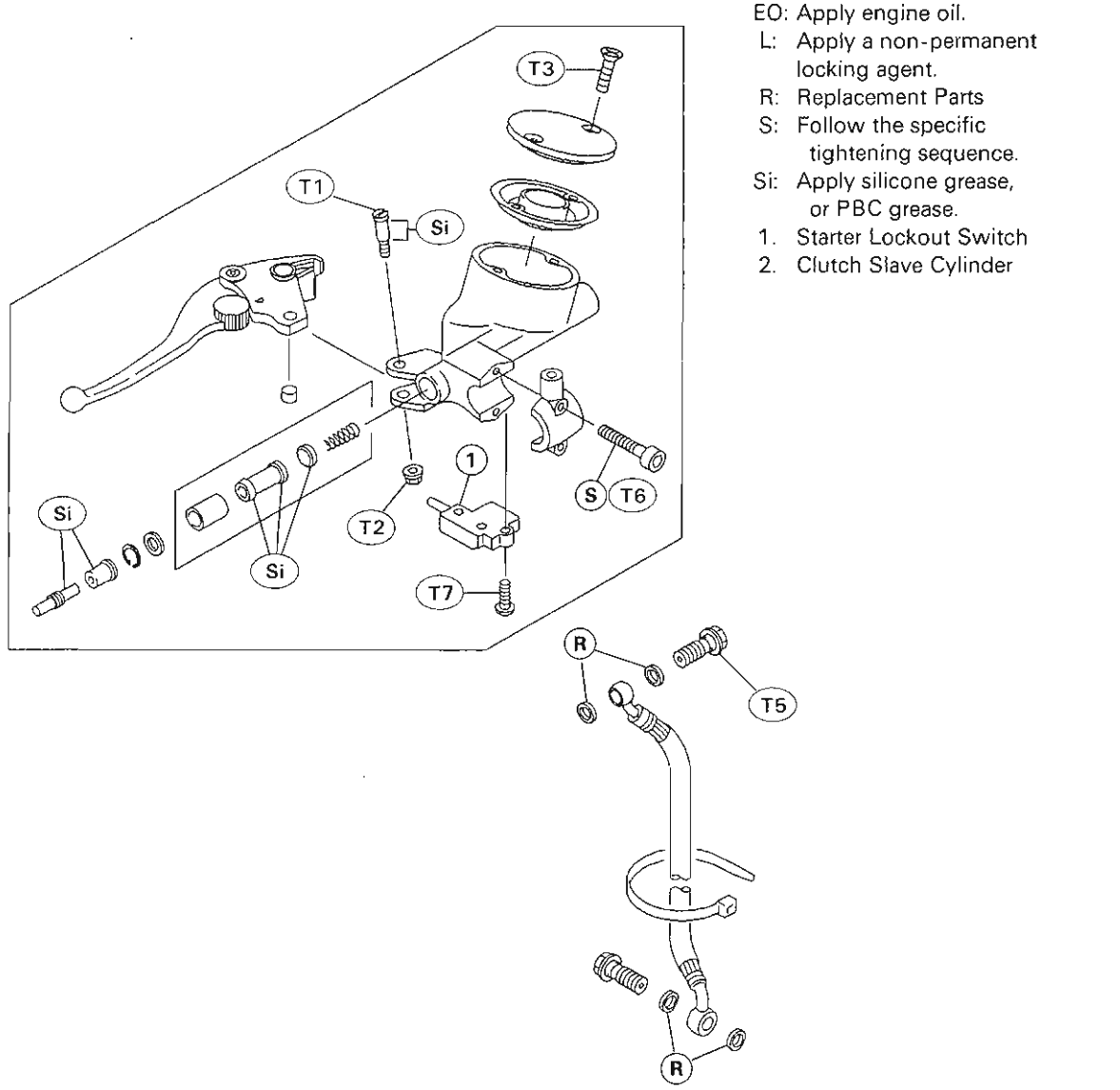

EO: Apply engine oil.
L: Apply a non-permanent locking agent.
R: Replacement Parts
S: Follow the specific tightening sequence.
Si: Apply silicone grease, or PBC grease.
1. Starter Lockout Switch
2. Clutch Slave Cylinder

T1: 1.0 N-m (0.10 kg-m, 9 in-lb)
T2: 5.9 N-m (0.60 kg-m, 52 in-lb)
T3: 1.5 N-m (0.15 kg-m, 13 in-lb)
T4: 7.8 N-m (0.80 kg-m, 69 in-lb)
T5: 25 N-m (2.5 kg-m, 18.0 ft-lb)
T6: 9.8 N-m (1.0 kg-m, 87 in-lb)
T7: 1.2 N-m (0.12 kg-m, 10 in-lb)
T8: 4.9 N-m (0.50 kg-m, 43 in-lb)
T9: 145 N-m (15.0 kg-m, 110 ft-lb)

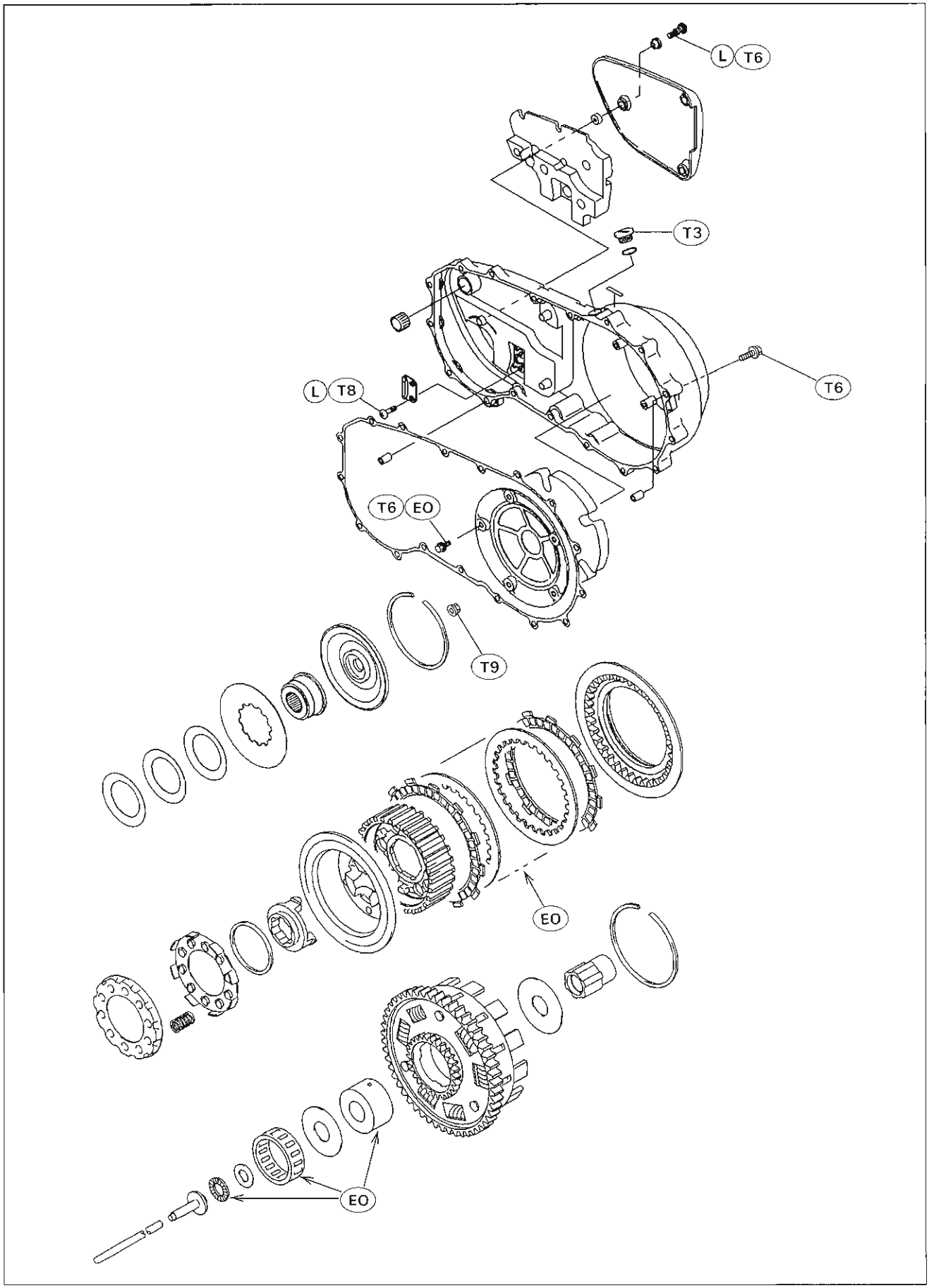
L
T6
T3
L
T8
T6
T6
EO
T9
EO
EO

Specifications

Item	Standard	Service Limit
Clutch Fluid		
Grade	D.O.T. 4	– – –
Brand (recommended)	Castrol Girling-Universal Castrol GT (LMA) Castrol Disc Brake Fluid Check Shock Premium Heavy Duty	
Clutch Lever Position	4-way adjustable (to suit rider)	– – –
Clutch Lever Free Play	Non-adjustable	– – –
Clutch		
Clutch spring free height	4.3 mm	4 mm
Spring plate free play	0.30 ~ 1.30 mm	– – –
Friction and steel plate warp	0.2 mm or less	0.3 mm

Special Tools – Inside Circlip Pliers: 57001-143
Bearing Driver Set: 57001-1129

Clutch Lever

The adjuster has 4 positions so that the clutch lever position can be adjusted to suit the operator's hand.

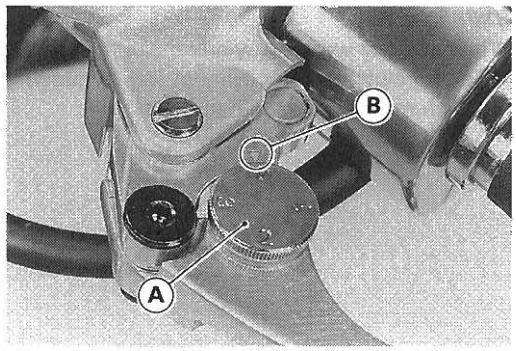

Position Adjustment

- ●Push the lever forward and turn the adjuster [A] to align the number with the triangular mark [B] on the lever holder.
- ○The distance from the grip to the lever is minimum at Number 4 and maximum at Number 1.

Master Cylinder

Installation

- Immediately wash away any brake fluid that spills.
- Set the clutch master cylinder [A] to match its mating face [B] to the punch mark [C] of the handlebar.

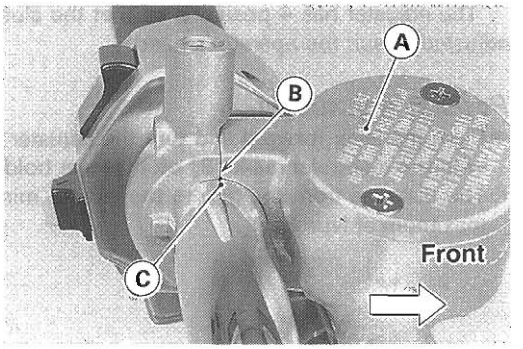

○The master cylinder clamp must be installed with the rear view mirror boss [A] upward.

- Tighten the upper clamp bolt [B] first, and then the lower clamp bolt [C]. There will be a gap at the lower part of the clamp after tightening.

Torque – Clutch Master Cylinder Clamp Bolts: 9.8 N-m (1.0 kg-m, 87 in-lb)

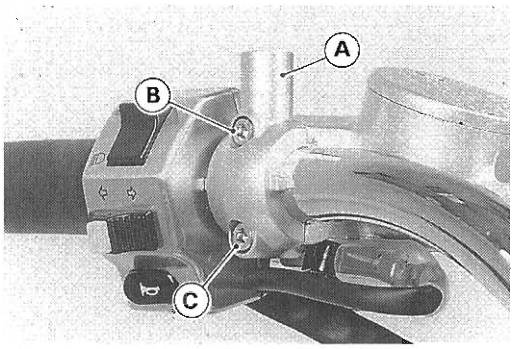

- Use a new flat washer on each side of the clutch hose fitting.
- Tighten the clutch hose banjo bolt.

Torque – Clutch Hose Banjo Bolt: 25 N-m (2.5 kg-m, 18.0 ft-lb)

- Replenish the clutch fluid into the reservoir and bleed the clutch line (see Bleeding the Clutch Line in the Base Manual).
- Check that the clutch line has proper fluid pressure and no fluid leakage.

Clutch Slave Cylinder

Refer to p. 5-6 of the Base Manual, noting the following.

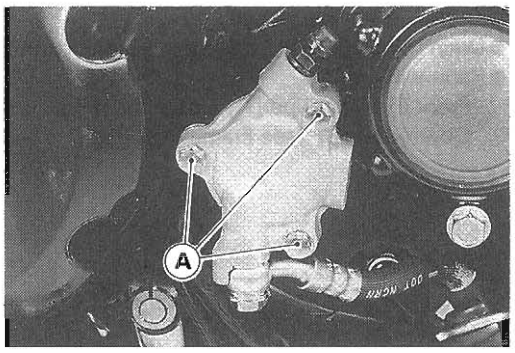

Installation

- Apply a non-permanent locking agent to the threads of the clutch slave cylinder bolts [A].
- Finger tighten the clutch slave cylinder bolts.
- Remove the band from the clutch lever and release the clutch lever.
- Tighten the clutch slave cylinder bolts securely.

Clutch Cover

Clutch Cover Removal

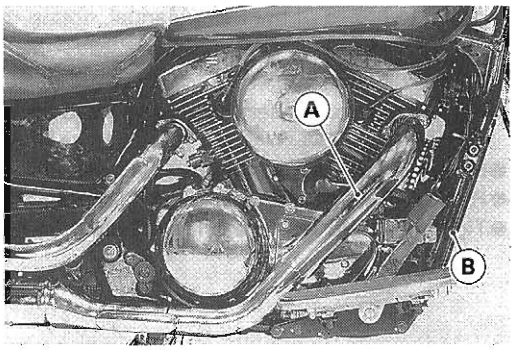

- Drain the engine oil (see Engine Lubrication System chapter).
- Remove:
  Front Exhaust Pipe [A] (see Engine Top End chapter)
  Downtube [B] (see Frame chapter)

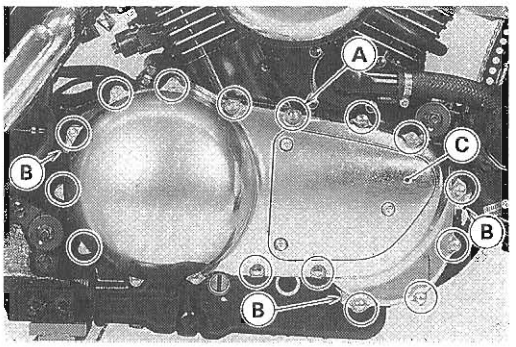

- Unscrew the cover bolts [A].
- Using the pry points [B], take the cover off the crankcase.

NOTE

○*Do not remove the damper cover* [C].

Engine Lubrication System

Table of Contents

Exploded View 6-2
Engine Oil Flow chart ..... *
Specifications 6-4
Engine Oil and Oil Filter ..... *
  Oil Level Inspection ..... *
  Engine Oil Change ..... *
  Oil Filter Change ..... *
  Oil Pump Screen Cleaning ..... *
Oil Pump ..... *
  Removal ..... *
  Installation ..... *
Oil Pipes 6-5
  Removal ..... *
  Installation ..... *
  Outside Oil Pipe Removal 6-5
  Outside Oil Pipe Installation 6-5
Oil Pressure Measurement 6-6
  Oil Pressure Measurement ..... *
  Relief Valve Inspection 6-6

(*): Refer to Base Manual.

Exploded View

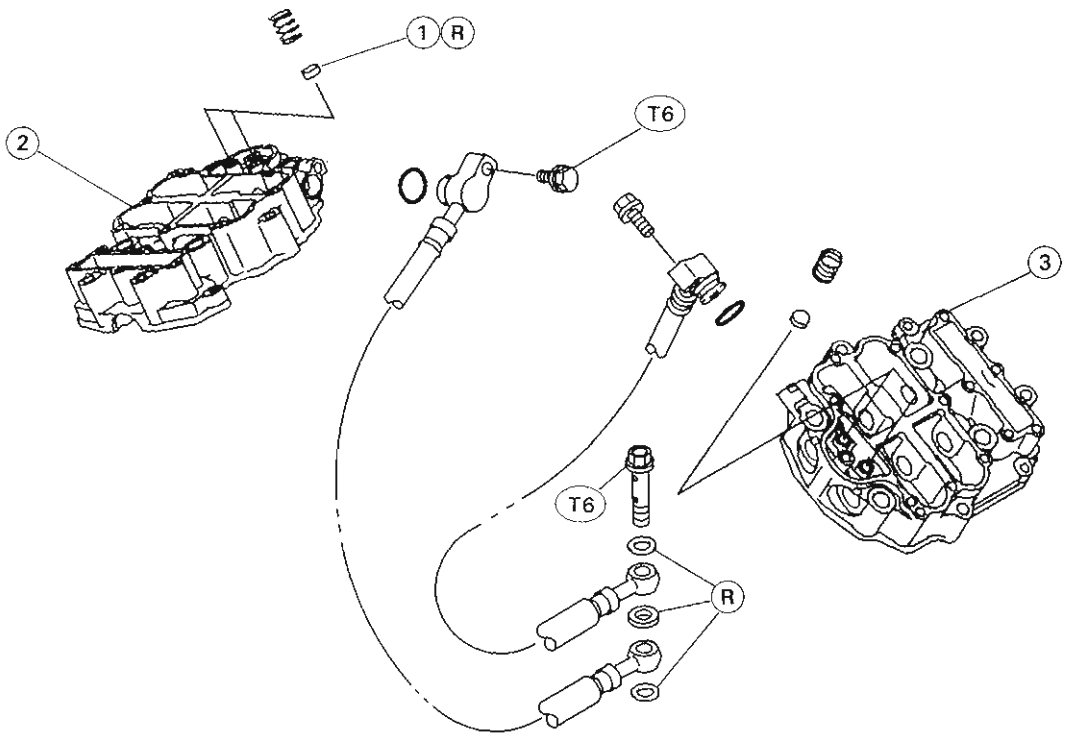

1. HLA Oil Filter
2. Front Rocker Case
3. Rear Rocker Case
4. Oil Screen
5. Oil Nozzle

L: Apply a non-permanent locking agent.
R: Replacement Parts
SS: Apply silicone sealant.
(Kawasaki Bond: 56019-120)

T1: 20 N-m (2.0 kg-m, 14.5 ft-lb)
T2: 18 N-m (1.8 kg-m, 13.0 ft-lb) or hand-tight
T3: 25 N-m (2.5 kg-m, 18.0 ft-lb)
T4: 15 N-m (1.5 kg-m, 11.0 ft-lb)
T5: 1.5 N-m (0.15 kg-m, 13 in-lb)
T6: 9.8 N-m (1.0 kg-m, 87 in-lb)
T7: 8.8 N-m (0.90 kg-m, 78 in-lb)
T8: 3.4 N-m (0.35 kg-m, 30 in-lb)

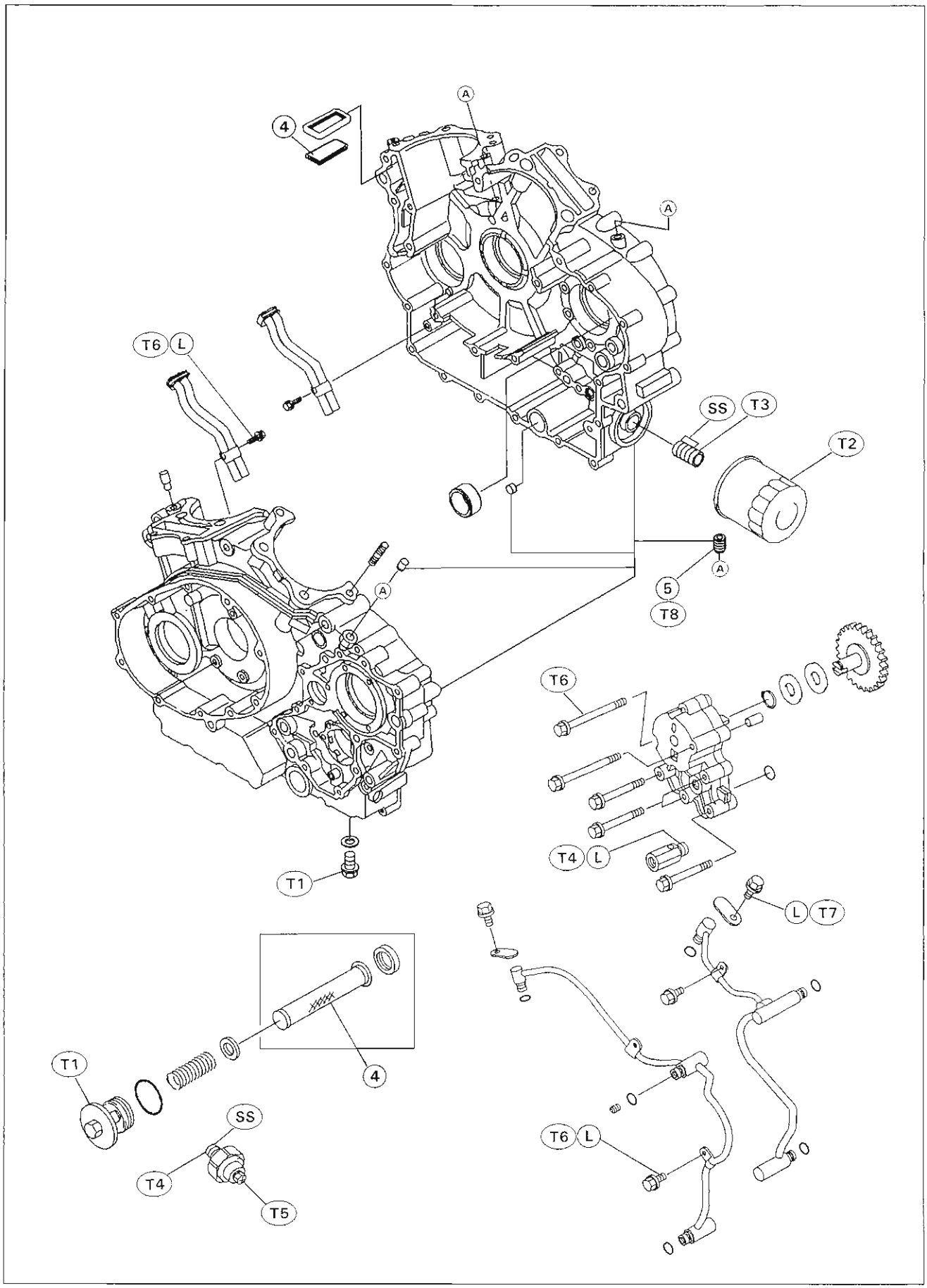
4
A
A
T6
L
SS
T3
T2
A
5
T8
A
T6
T4
L
T1
L
T7
4
T1
SS
T4
T5
T6
L

Specifications

Item	Standard
Engine Oil:	
Grade	SE, SF, or SG class
Viscosity	SAE 10W-40, 10W-50, 20W-40, or 20W-50
Capacity	2.5 L (when filter is not removed) 2.7 L (when filter is removed) 3.5 L (when engine is completely dry)
Level (after idling or running)	Between upper and lower level lines
Oil Pressure Measurement:	
Oil pressure @2 000 r/min (rpm), oil temp. 100°C (212°F)	345 ~ 440 kPa(3.5 ~ 4.5 kg/cm², 50 ~ 64 psi)

Special Tools – **Oil Pressure Gauge, 5 kg/cm²: 57001-125**
Oil Pressure Gauge Adapter, PT ⅛: 57001-1033
Oil Filter Wrench: 57001-1249

Sealant – **Kawasaki Bond (Silicone Sealant): 56019-120**

Oil Pipes

Refer to P.6-9 of the Base Manual, noting the following.

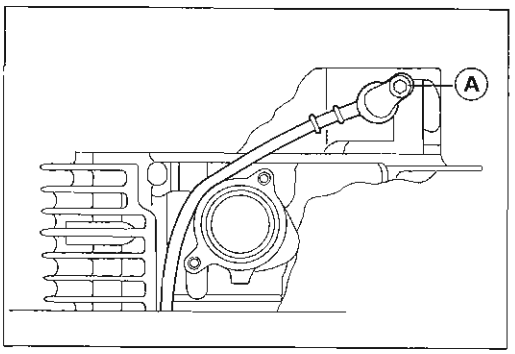

Outside Oil Hose Removal

- Remove the engine (see Engine Removal/Installation chapter).
- Remove:
  Rocker Case Cover
  Oil Hose Flange Bolts [A] on Rocker Case
  Oil Hose Banjo Bolts on Right Crankcase

- Remove the front oil hose [B] and the rear oil hose [C].

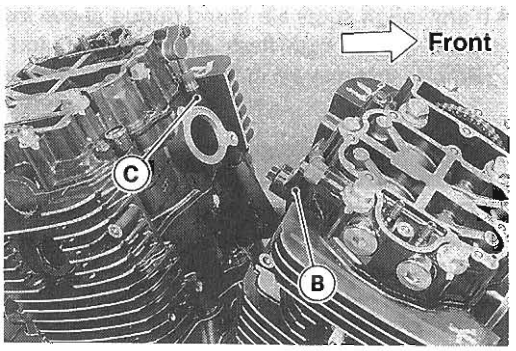

Outside Oil Hose Installation

- Run the front oil hose [A] over the inlet pipe [B] as shown.
- Run the rear oil hose downward (see above).
- Run both oil hoses between the inlet pipe and the cylinder fins.

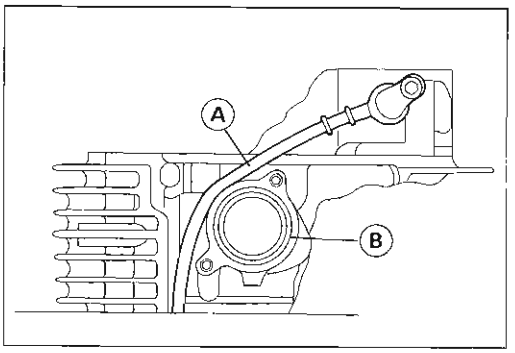

- Install each bottom end of the oil hoses as shown.
  Front Oil Hose [A]
  Rear Oil Hose [B]
  Face the paint marks [C] rearward.

Torque – Oil Hose Flange Bolts: 9.8 N-m (1.0 kg-m, 87 in-lb)
Oil Hose Banjo Bolts [D]: 12 N-m (1.2 kg-m, 104 in-lb)

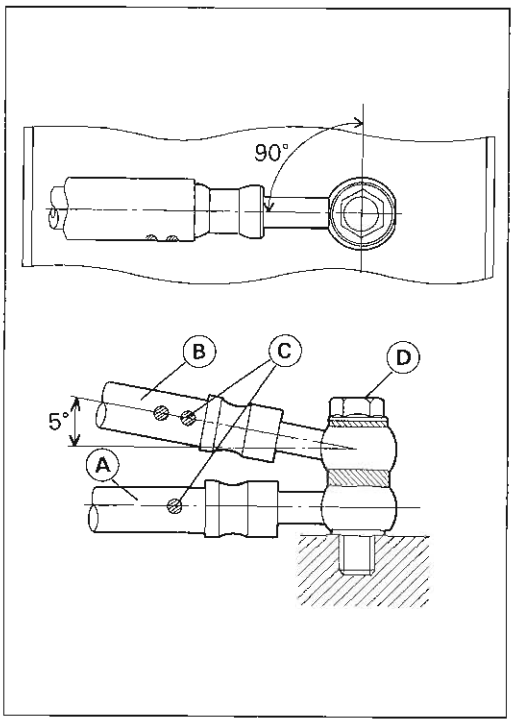

Oil Pressure Measurement

Relief Valve Inspection

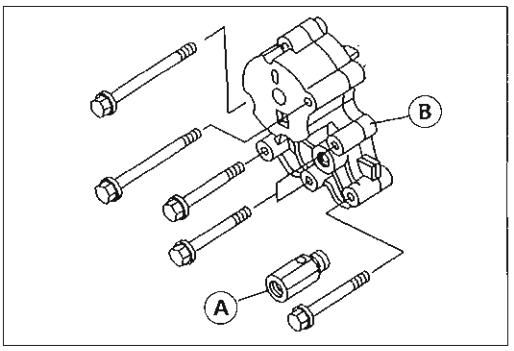

- Split the crankcase (see Crankshaft/Transmission chapter).
- Remove the relief valve [A] from the oil pump [B].
- Check to see if the valve slides smoothly when pushing it in with a wooden or other soft rod, and see if it comes back to its seat by spring pressure.

NOTE

○ *Inspect the valve in its assembled state. Disassembly and assembly may change the valve performance.*

★If any rough spots are found during above inspection, wash the valve clean with a high-flash point solvent and blow out any foreign particles that may be in the valve with compressed air.

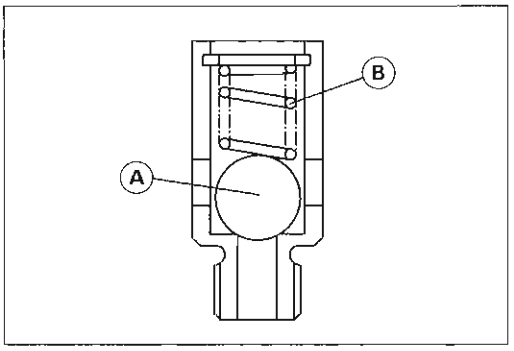

Valve [A] Spring [B]

⚠WARNING

Clean the relief valve in a well-ventilated area, and take care that there is no spark or flame anywhere near the working area. Because of the danger of highly flammable liquids, do not use gasoline or low-flash point solvent.

★If cleaning does not solve the problem, replace the relief valve as an assembly. The relief valve is precision made with no allowance for replacement of individual parts.

Engine Removal/Installation

Table of Contents

Exploded View 7-2
Specifications 7-3
Engine Removal/Installation 7-4
    Engine Removal 7-4
    Engine Installation 7-7

(*): Refer to Base Manunal.

Exploded View

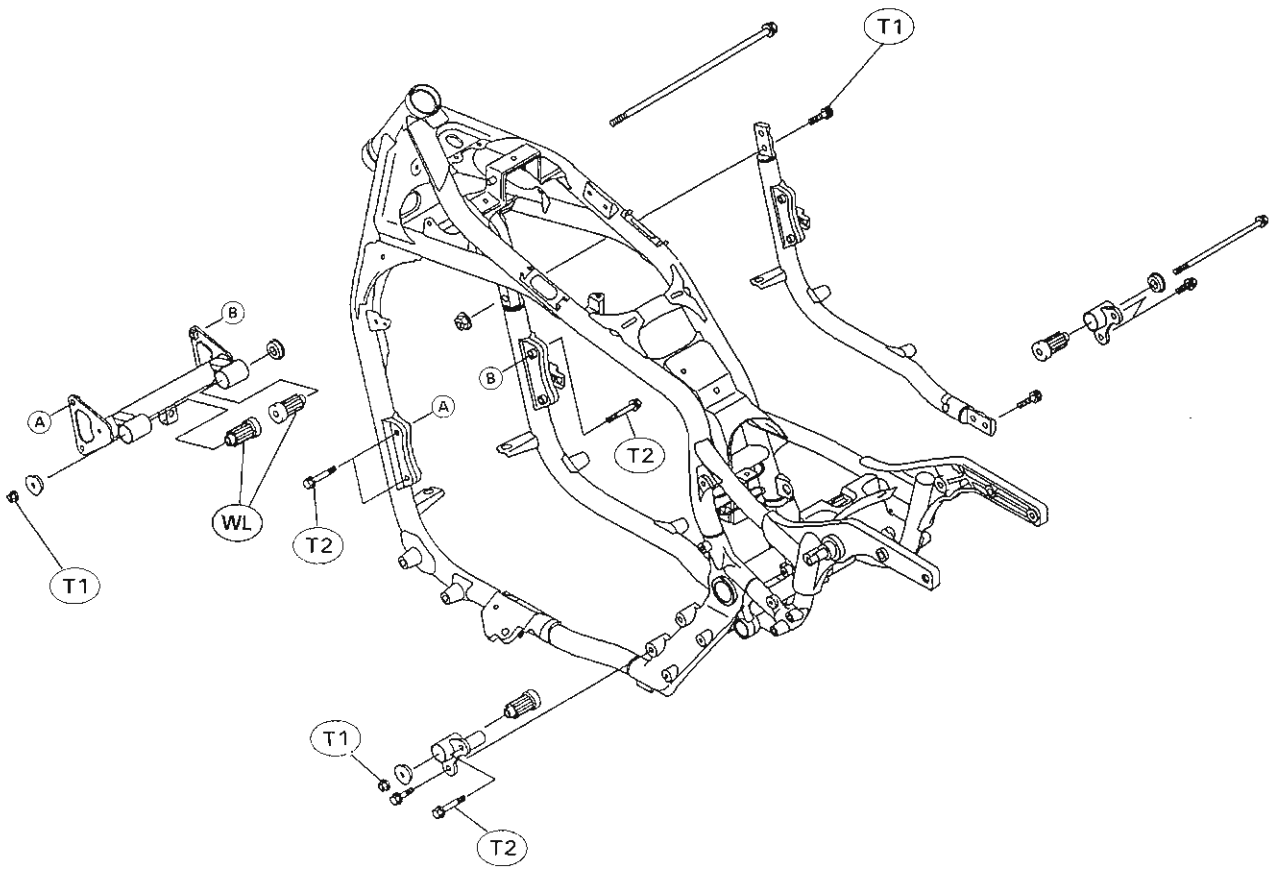

WL: Apply soap and water solution.

T1: 44 N-m (4.5 kg-m, 33 ft-lb)
T2: 23 N-m (2.3 kg-m, 16.5 ft-lb)

Specifications

Special Tools – **Jack: 57001-1238**
Attachment Jack: 57001-1398

Engine Removal/Installation

Engine Removal

● Support the rear part of the frame on the jack [A].

Special Tools – Jack: 57001-1238
Attachment Jack [B]: 57001-1398

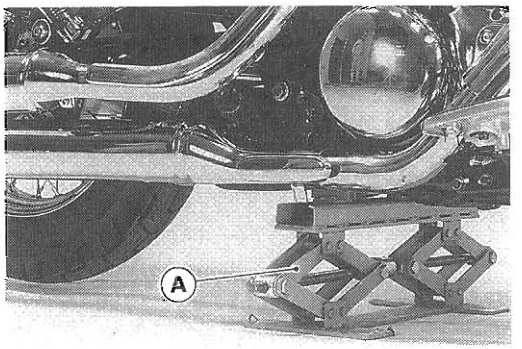

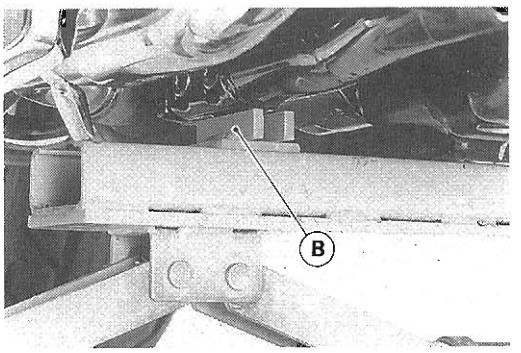

● Squeeze the brake lever slowly and hold it with a band [A].

⚠WARNING

Be sure to hold the front brake when removing the engine, or the motorcycle may fall over. It could cause an accident and injury.

CAUTION

Be sure to hold the front brake when removing the engine, or the motorcycle may fall over. The engine or the motorcycle could be damaged.

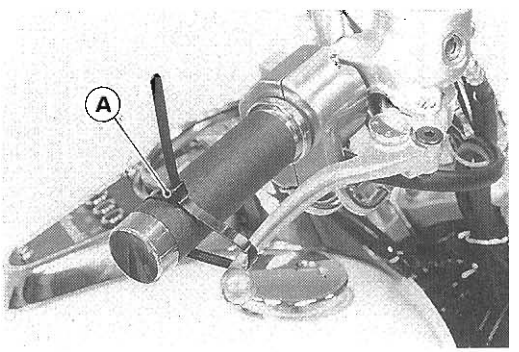

● Drain:
Coolant (see Cooling System chapter)
Engine Oil (see Engine Lubrication System chapter)
● Disconnect the battery negative (–) terminal.

● Remove:
Fuel Tank [A] (see Fuel System chapter)
Front and Rear Exhaust Pipes [B] (see Engine Top End chapter)
Air Cleaner Housings [C] (see Fuel System chapter)
Fuel Pump (see Fuel System chapter)
Surge Tank (see Fuel System chapter)
Spark Plug Leads [D]
Air Suction Valve Hoses

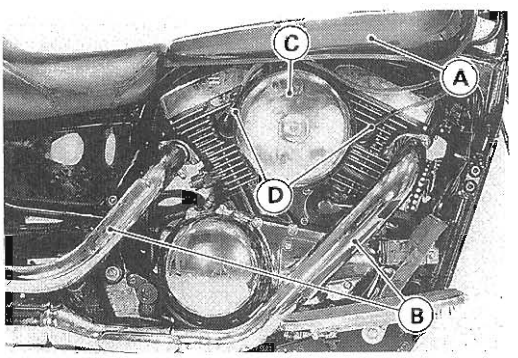

● Disconnect:
Radiator Fan Motor Connector [A]
Rear Brake Light Switch Connector [B]
● Remove:
Radiator (see Cooling System chapter)
Rear Shift Pedal
Alternator Outer Cover (see Electrical System chapter)
Front Shift Pedal

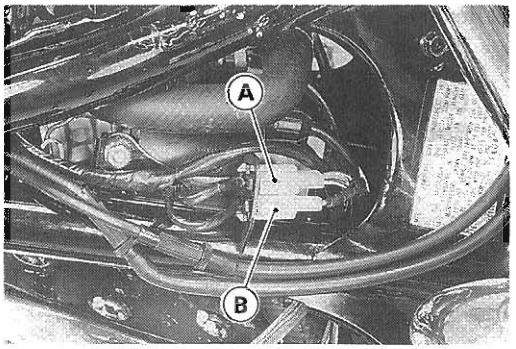

● Disconnect:
Starter Motor Terminal
Alternator Connectors [A]
Pickup Coil Lead Connector [B]
Oil Pressure Switch Terminal
Neutral Switch Connector
● Remove:
Clutch Slave Cylinder
Clutch Hose (from the holder)

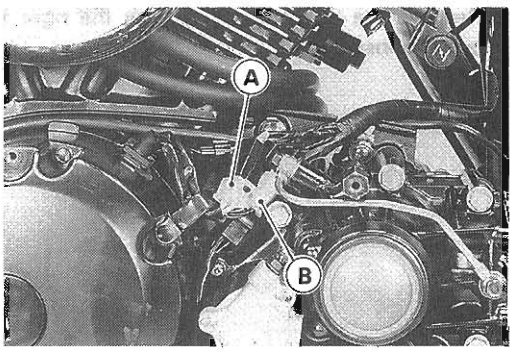

● Remove:
Horn Bolts [A]
Horns [B]

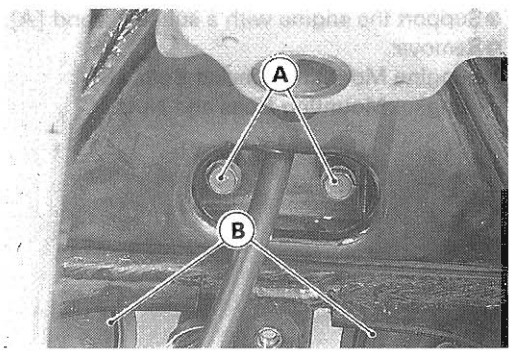

● Remove:
Water Hoses [A] on Cylinder Heads
Carburetor (see Fuel System chapter)

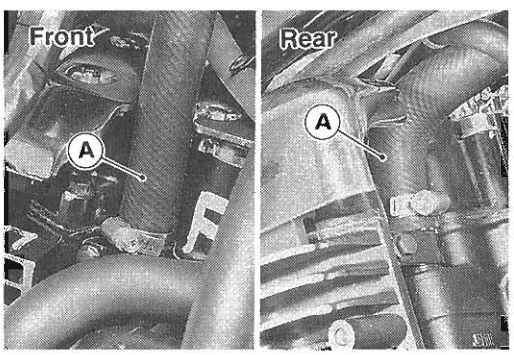

● Disconnect the engine ground terminal [A].

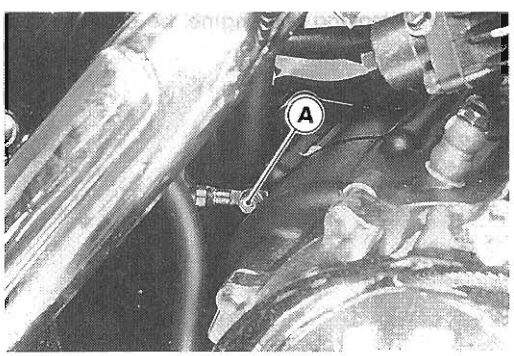

● Remove:
Front Exhaust Pipe (see Engine Top End chapter)
Engine Mounting Bracket Bolts [A]
Downtube Bolts [B]
Rear Exhaust Pipe [C] (see Engine Top End chapter)

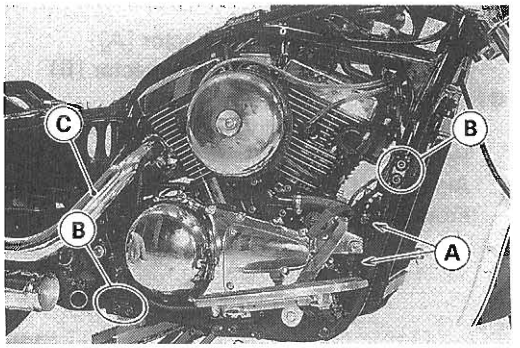

● Remove the downtube [D] with the right footpeg and rear master cylinder installed.

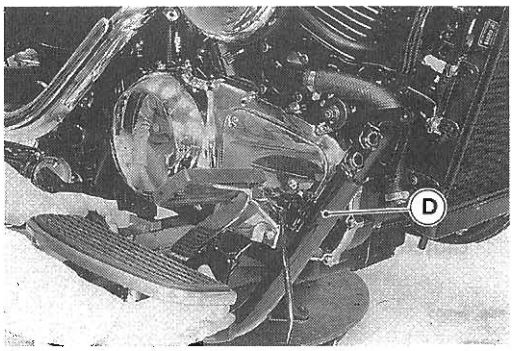

● Support the engine with a suitable stand [A].
● Remove:
Engine Mounting Bracket Bolts [B]
Engine Mounting Bolts and Nuts [C]

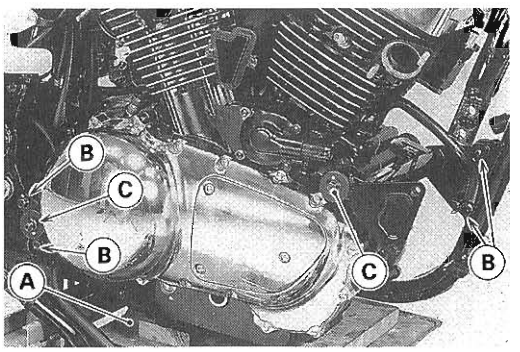

● Disengage the propeller shaft from the engine.
○ Pull off the boots [A] and push on the lockpin [B] a little with a wire.
○ Move the engine forward [C] to free it from the rear propeller shaft.

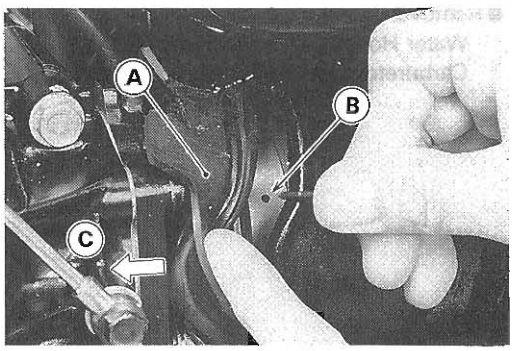

○ When removing the engine, be careful not to damage the shift shaft [A].

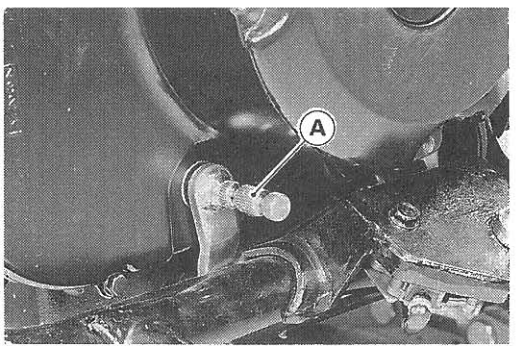

● Remove the engine [A] from the motorcycle right side.

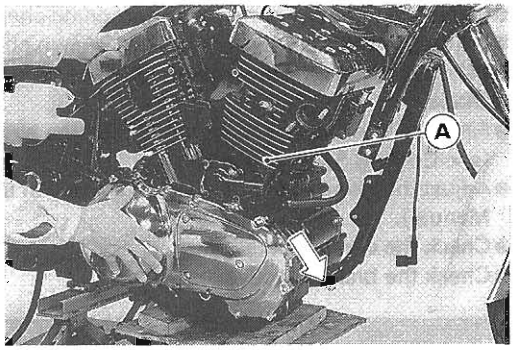

Engine Installation

● Install the rubber boots [A] on the rear end of the front bevel gear case.
● Fit the spring [B] into the front bevel gear joint.
● Put the lockpin [C] into the front bevel gear joint.

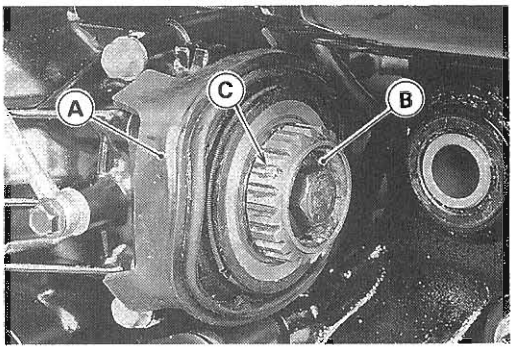

● Apply a thin coat of a high temperature grease to the driven gear joint and to the propeller shaft joint.
● Push on the lockpin [A] and move back the engine to engage the front bevel gear joint with the propeller shaft joint.

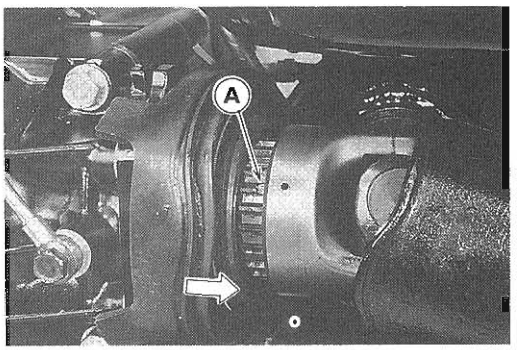

● Run the brake hose [A] and the clutch hose [B] inside the frame [C] as shown.

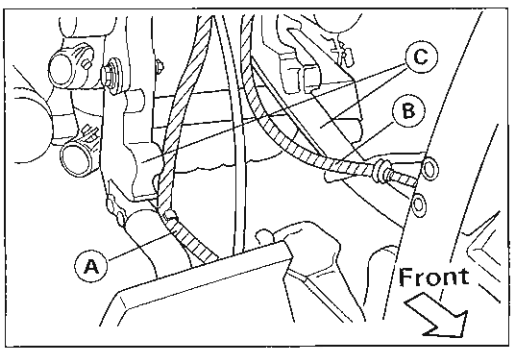

● Insert the rear mounting bolt from the left side of the engine to set the engine into its final position in the frame.
● Tighten:

Torque – Downtube Bolts: 44 N-m (4.5 kg-m, 33 ft-lb)
Engine Mounting Bolts and Nuts: 44 N-m (4.5 kg-m, 33 ft-lb)
Engine Mounting Bracket Bolts: 23 N-m (2.3 kg-m, 16.5 ft-lb)

● Run the leads, cables and hoses correctly (see Cable, Wire and Hose Routing section in the General Information chapter).
● Connect the engine ground lead [A] to the engine as shown.
About 30° [B]

Torque – Engine Ground Terminal Bolt: 9.8 N-m (1.0 kg-m, 87 in-lb)

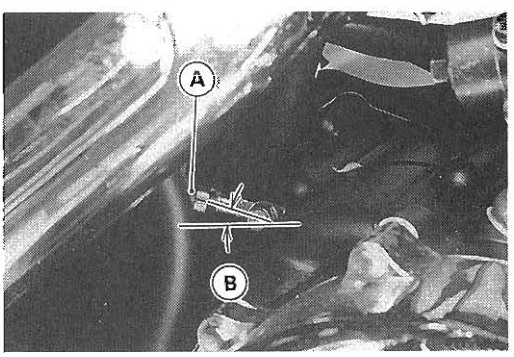

- Install the removed parts (see appropriate chapters).
- Adjust the throttle cables (see Fuel System chapter).
- Fill the engine with engine oil (see Engine Lubrication System chapter).
- Fill the engine with coolant and bleed the air from the cooling system (see Cooling System chapter).
- Adjust the idling (see Fuel System chapter in this Manual and the Base Manual).
- Check the clutch operation.
- Check the brake effectiveness.

⚠WARNING

Do not attempt to drive the motorcycle until a full brake lever or pedal is obtained by pumping the brake lever or pedal until the pads are against the disc. The brake will not function on the first application of the lever or pedal if this is not done.

Crankshaft/Transmission

Table of Contents

Exploded View 8-2
Specifications 8-5
Crankcase ..... *
  Splitting ..... *
  Assembly ..... *
  Replacement ..... *
Crankshaft/Connecting rods ..... *
  Crankshaft Installation ..... *
  Connecting Rod Removal ..... *
  Connecting Rod Installation ..... *
  Connecting Rod Big End Bearing Insert/Crankpin Wear ..... *
  Crankshaft Runout ..... *
  Crankshaft Main Bearing/Main Journal Wear ..... *
  Crankshaft Side Clearance ..... *
Starter Motor Clutch ..... *
  Removal ..... *
  Installation ..... *
  Disassembly ..... *
  Assembly ..... *
  Inspection ..... *
Balancer 8-6
  RH Balancer Weight Removal ..... *
  LH Balancer Weight Removal ..... *
  RH Balancer Weight Installation ..... *
  LH Balancer Weight Installation 8-6
  Balancer Shaft Removal ..... *
  Balancer Shaft Installation ..... *
Starter Torque Limiter ..... *
  Removal ..... *
  Inspection ..... *
Water Pump Idle Shaft Holder ..... *
  Removal ..... *
  Installation ..... *
Primary Gear ..... *
  Removal ..... *
  Installation ..... *
Transmission 8-7
  Rear Shift Pedal Removal 8-7
  Rear Shift Pedal Installation 8-7
  Front Shift Pedal Removal 8-7
  Front Shift Pedal Installation 8-7
  External Shift Mechanism Removal 8-8
  External Shift Mechanism Installation 8-9
  External Shift Mechanism Inspection ..... *
  Transmission Shafts Removal ..... *
  Transmission Shafts Installation ..... *
  Transmission Disassembly 8-9
  Transmission Assembly ..... *
  Shift Drum Removal ..... *
  Shift Drum Disassembly/Assembly ..... *

(*): Refer to Base Manual.

Exploded View

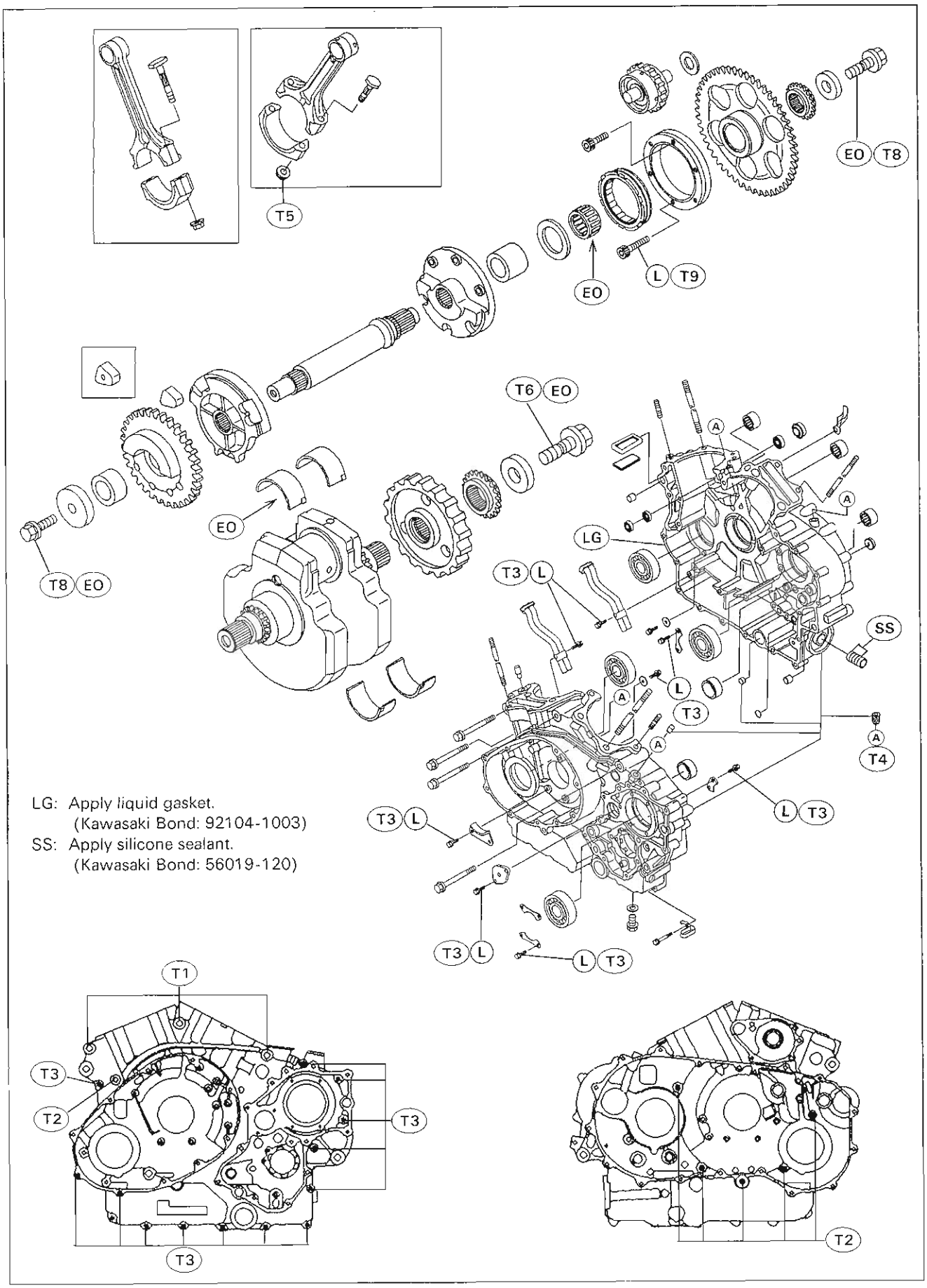

LG: Apply liquid gasket.
(Kawasaki Bond: 92104-1003)
SS: Apply silicone sealant.
(Kawasaki Bond: 56019-120)

EO: Apply engine oil.
L: Apply a non-permanent locking agent.
Lh: Left-hand Threads
T1: 39 N-m (4.0 kg-m, 29 ft-lb)
T2: 21 N-m (2.1 kg-m, 15.0 ft-lb)
T3: 9.8 N-m (1.0 kg-m, 87 in-lb)
T4: 3.4 N-m (0.35 kg-m, 30 in-lb)
T5: 59 N-m (6.0 kg-m, 43 ft-lb)
T6: 145 N-m (15.0 kg-m, 110 ft-lb)
T7: 2.9 N-m (0.30 kg-m, 26 in-lb)
T8: 85 N-m (8.7 kg-m, 63 ft-lb)
T9: 15 N-m (1.5 kg-m, 11.0 ft-lb)
T10: 20 N-m (2.0 kg-m, 14.5 ft-lb)
1. Align the marks.

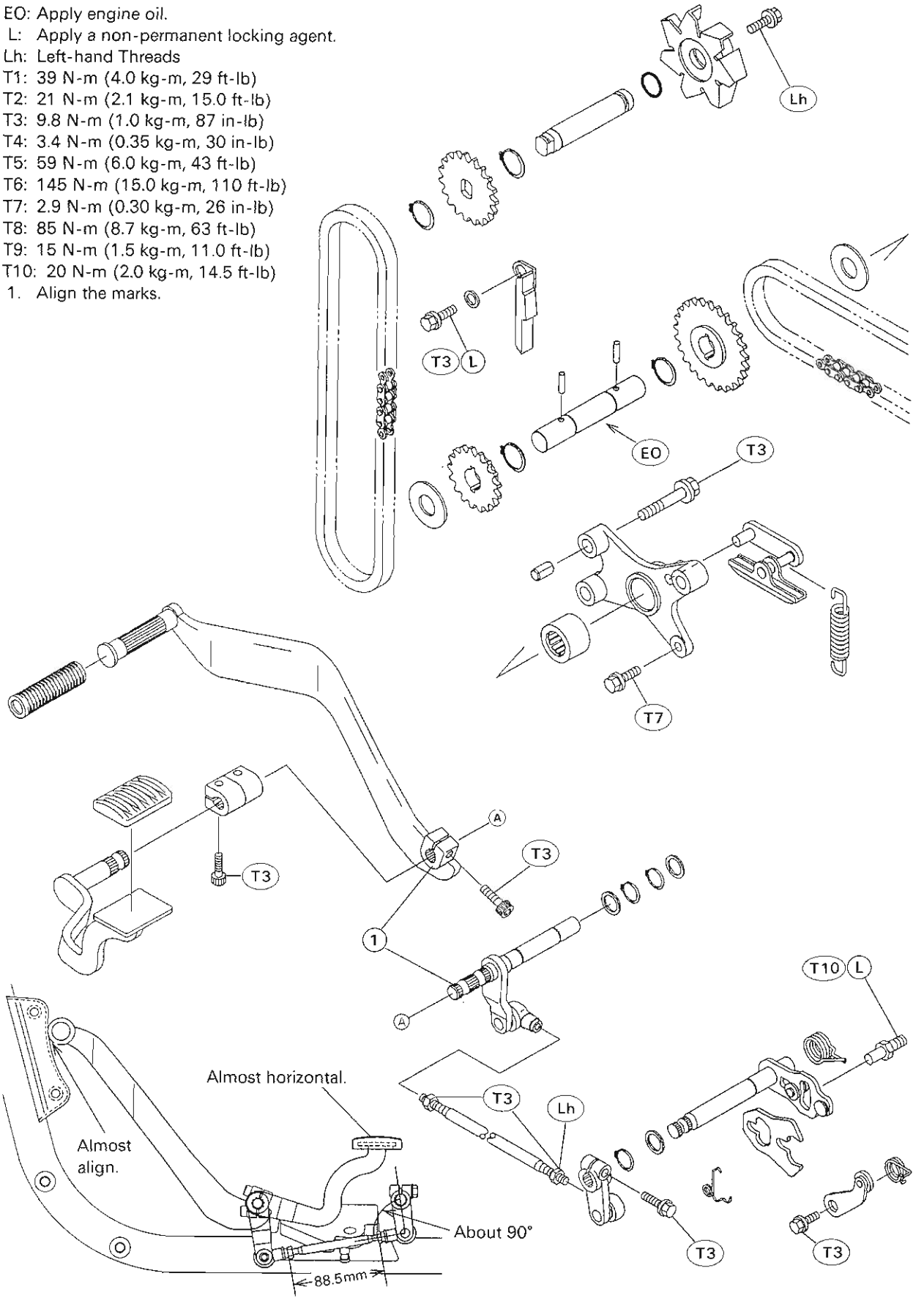

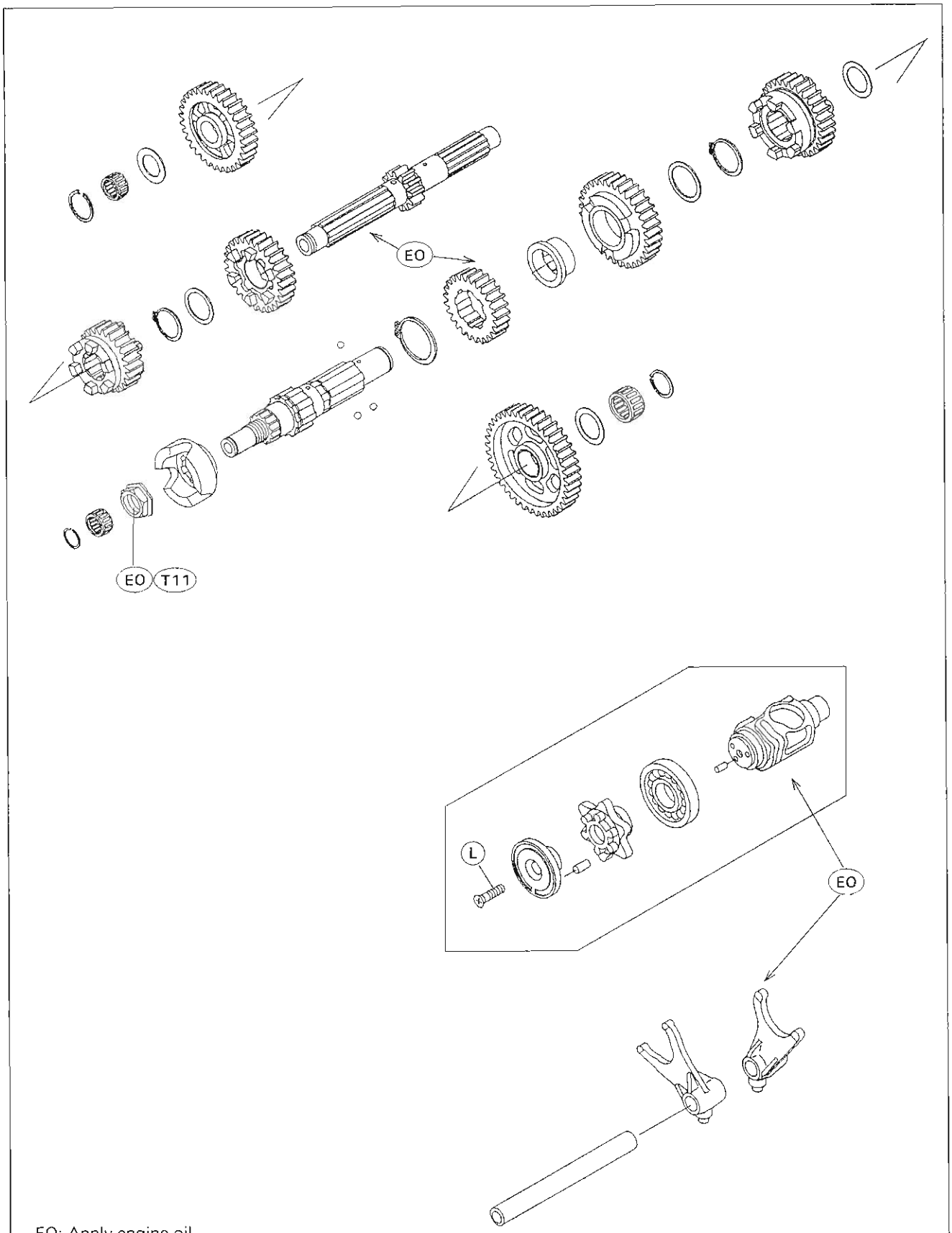

EO: Apply engine oil.
L: Apply a non-permanent locking agent.
T11: 226 N-m (23.0 kg-m, 166 ft-lb)

Specifications

Item		Standard	Service Limit
Crankshaft, Connecting Rods:			
Connecting rod big end side clearance		0.16 ~ 0.46 mm	0.7 mm
Connecting rod big end bearing insert/crankpin clearance		0.026 ~ 0.057 mm	0.10 mm
Crankpin diameter:		54.981 ~ 55.000 mm	54.97 mm
Marking	None	54.981 ~ 54.991 mm	---
	○	54.992 ~ 55.000 mm	---
Connecting rod big end bore diameter:		58.000 ~ 58.020 mm	---
Marking	None	58.000 ~ 58.010 mm	---
	○	58.011 ~ 58.020 mm	---
Connecting rod big end bearing insert thickness:			
	Brown	1.483 ~ 1.487 mm	---
	Black	1.487 ~ 1.491 mm	---
	Blue	1.491 ~ 1.495 mm	---

Connecting rod big end bearing insert selection:

Con-rod Big End Bore Diameter Marking	Crankpin Diameter Marking	Bearing Insert	
		Size Color	Parts Number
None	○	Brown	92028-1476
None	None	Black	92028-1475
○	○		
○	None	Blue	92028-1474

Crankshaft side clearance	0.05 ~ 0.55 mm	0.75 mm
Crankshaft web length	96.85 ~ 96.95 mm	96.6 mm
Crankshaft runout	TIR 0.02 mm or less	TIR 0.05 mm
Crankshaft main bearing insert/journal clearance	0.025 ~ 0.052 mm	0.10 mm
Crankshaft main journal diameter	54.986 ~ 55.000 mm	54.96 mm
Crankcase main bearing bore diameter	55.025 ~ 55.038 mm	55.07 mm
Transmission		
Shift fork ear thickness	5.9 ~ 6.0 mm	5.8 mm
Gear shift fork groove width	6.05 ~ 6.15 mm	6.3 mm
Shift fork guide pin diameter	7.9 ~ 8.0 mm	7.8 mm
Shift drum groove width	8.05 ~ 8.20 mm	8.3 mm

Special Tools – **Damper Cam Holder: 57001-1025**
Flywheel Holder: 57001-1313
Gear Holder: 57001-1015
Outside Circlip Pliers: 57001-144
Bearing Driver Set: 57001-1129

Sealant – **Kawasaki Bond (Liquid Gasket-Black): 92104-1003**

Balancer

LH Balancer Weight Installation

● Be sure to position the rubber dampers [A] as shown. Do not install them inside out.

Holes [B].

Torque – Balancer Gear Bolt: 85 N-m (8.7 kg-m, 63 ft-lb)
Starter Motor Clutch Bolt: 85 N-m (8.7 kg-m, 63 ft-lb)

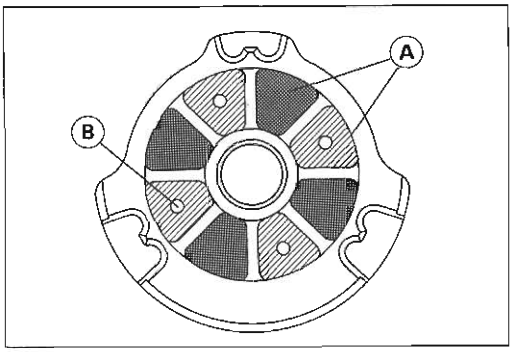

Transmission

Rear Shift Pedal Removal

- Remove the front footpeg [A].
- Unscrew the clamp bolt [B] and pull out the rear shift pedal [C].

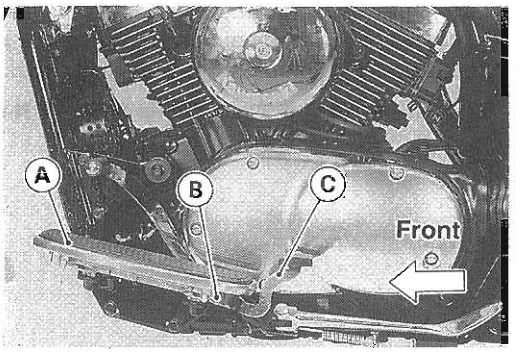

Rear Shift Pedal Installation

- Install the rear shift pedal [A] so that the pad [B] is almost horizontal.

Torque – Rear Shift Pedal Clamp Bolt: 9.8 N-m (1.0 kg-m, 87 in-lb)

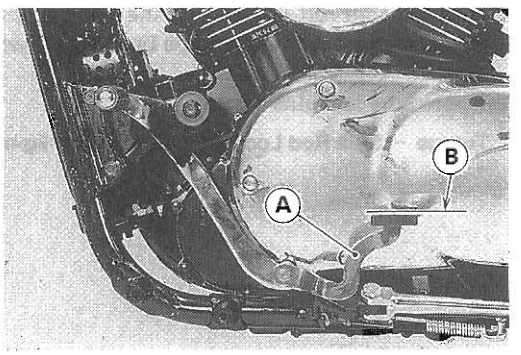

Front Shift Pedal Removal

- Remove the alternator outer cover (see Electrical System chapter).
- Unscrew two clamp bolts [A] and pull out the shift pedal joint [B].

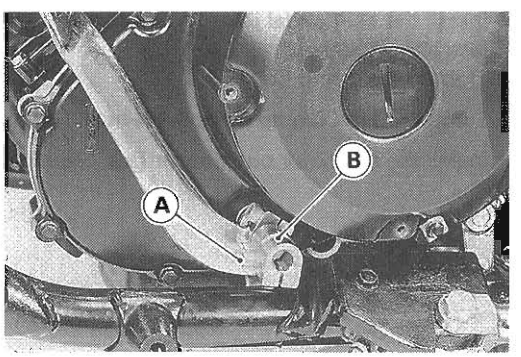

- Unscrew the clamp bolt [A] and pull out the front shift pedal [B].

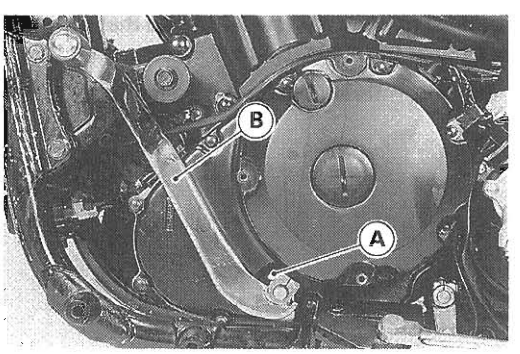

Front Shift Pedal Installation

- Loosen the locknuts [A] and turn the shift rod [B] so that the outside length of the locknuts is **88.5 mm.**

○ The rear locknut has left-hand threads.

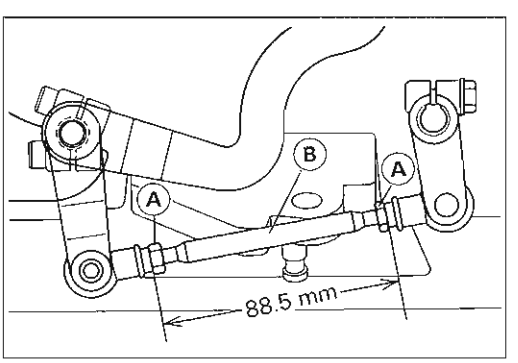

● Install the front shift pedal [A] so that the punched mark on the shaft is aligned [B] with the punched mark on the pedal.
● Tighten the clamp bolt of the front shift pedal.

Torque – Front Shift Pedal Clamp Bolts: 9.8 N-m (1.0 kg-m, 87 in-lb)

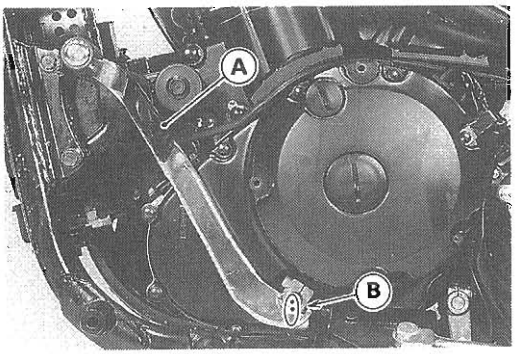

● Turn the shift rod [A] so that the pad [B] of the front shift pedal is almost aligned with the engine bracket [C] when viewed from the left side.
● Tighten the locknuts securely.

Torque – Shift Rod Locknuts: 9.8 N-m (1.0 kg-m, 87 in-lb)

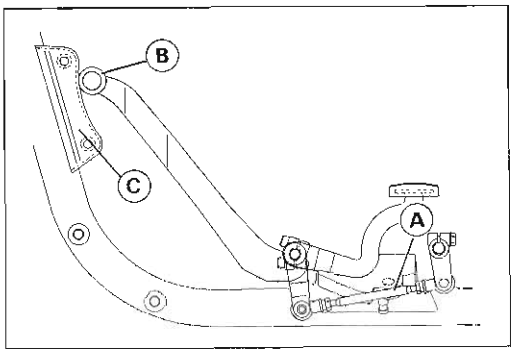

● Install the shift pedal joint [A] so that the joint clamp bolt heads [B] face almost forward.
● Tighten the clamp bolts.

Torque – Joint Clamp Bolts: 9.8 N-m (1.0 kg-m, 87 in-lb)

● Install the alternator outer cover (see Electrical System chapter).

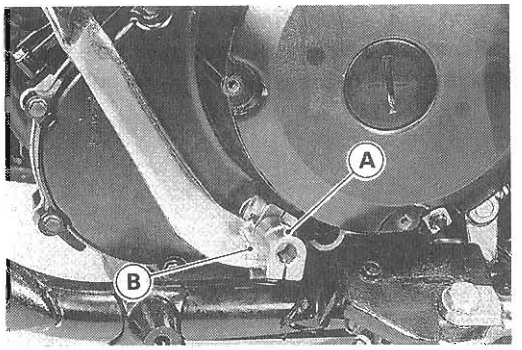

● Install the rear shift pedal [A] so that the pad [B] is almost horizontal.
● Tighten the clamp bolt.

Torque – Rear Shift Pedal Clamp Bolt: 9.8 N-m (1.0 kg-m, 87 in-lb)

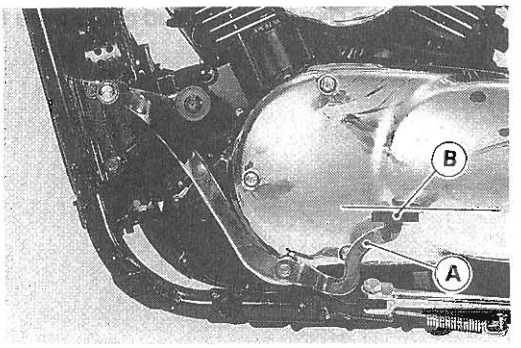

External Shift Mechanism Removal

● Remove:
Rear Shift Pedal (see this chapter)
Alternator Outer Cover (see Electrical System chapter)
Front Shift Pedal (see this chapter)
Engine (see Engine Removal/Installation chapter)
Rear Shift Lever [A]
Front Bevel Gear Case [B]

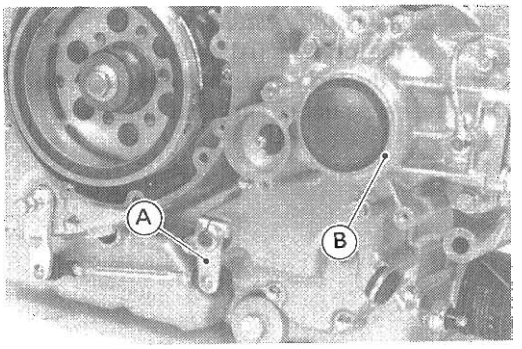

● Remove the shift shaft [A] while pushing the shift mechanism arm [B] towards the shift shaft [C].
● Unscrew the bolt and remove the gear positioning lever [D] and its spring.

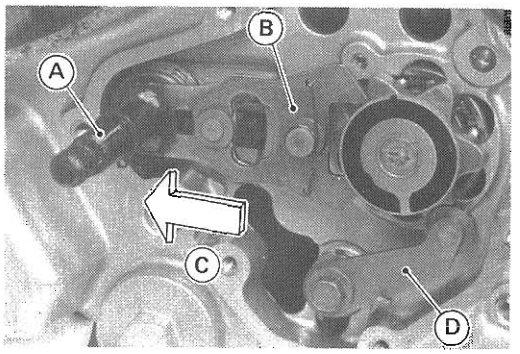

External Shift Mechanism Installation

● Install the gear positioning lever [A] and the spring [B] in the crankcase and tighten the bolt [C].
● Install the front bevel gear case (see Final Drive chapter in the Base Manual).

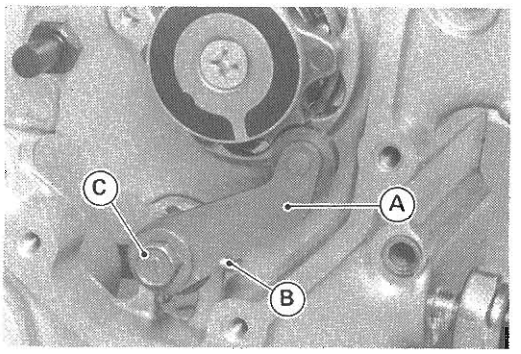

● Install the front shift lever and the rear shift lever [A].
○ Install the rear shift lever on the shift shaft so that the shift lever is at a right angle to the shift rod.
● Loosen the locknuts [B] and turn the shift rod [C] so that the outside length [D] of the locknuts is **88.5 mm.**

Torque – Shift Rod Locknuts: 9.8 N-m (1.0 kg-m, 87 in-lb)

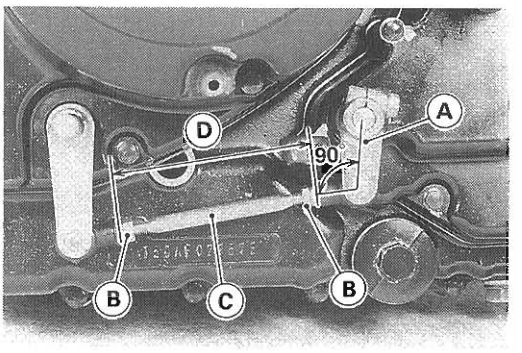

Wheels/Tires

Table of Contents

Exploded View 9-2
Specifications 9-3
Wheels (Rims) 9-4
- Front Wheel Removal ..... *
- Front Wheel Installation ..... *
- Rear Wheel Removal 9-4
- Rear Wheel Installation 9-4
- Wheel Coupling Removal ..... *
- Wheel Coupling Installation ..... *
- Spoke Inspection ..... *
- Rim Inspection ..... *
- Balance Weight Installation ..... *

Tires ..... *
- Tire Air Pressure Inspection ..... *
- Tire Inspection ..... *
- Tire Removal ..... *
- Tire Installation ..... *

Hub Bearings 9-6
- Removal ..... *
- Installation 9-6
- Inspection 9-6
- Lubrication 9-6

Speedometer Gear Housing ..... *
- Disassembly and Assembly ..... *
- Lubrication ..... *

(*): Refer to Base Manual.

Exploded View

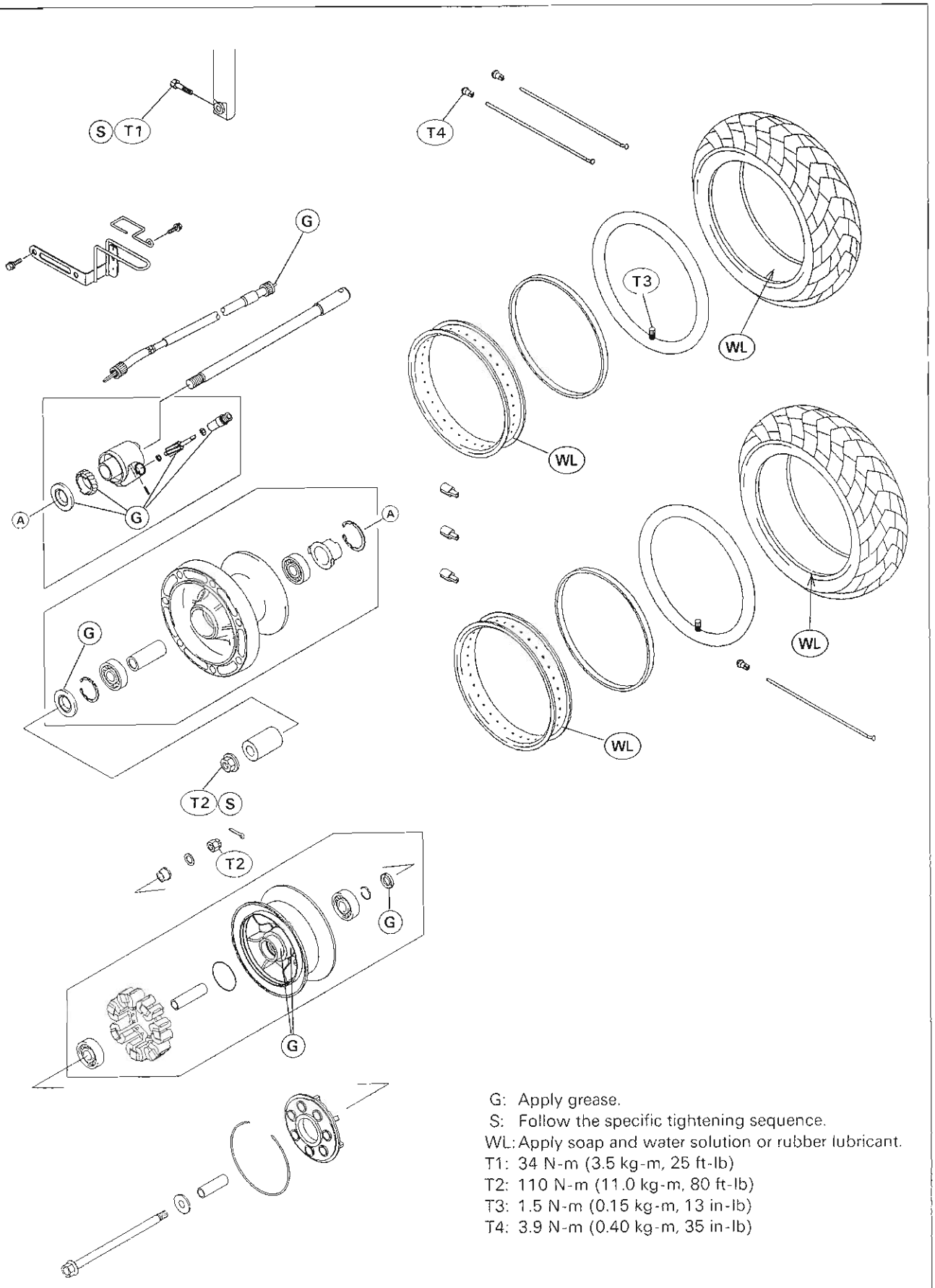

G: Apply grease.
S: Follow the specific tightening sequence.
WL: Apply soap and water solution or rubber lubricant.
T1: 34 N-m (3.5 kg-m, 25 ft-lb)
T2: 110 N-m (11.0 kg-m, 80 ft-lb)
T3: 1.5 N-m (0.15 kg-m, 13 in-lb)
T4: 3.9 N-m (0.40 kg-m, 35 in-lb)

Specifications

Item		Standard	Service Limit
Wheels (Rims):			
Rim runout:	Axial	TIR 0.5mm or less	TIR 2.0 mm
	Radial	TIR 0.8 mm or less	TIR 2.0 mm
Axle runout/100 mm		TIR 0.1 mm or less	TIR 0.2 mm
Wheel balance		10g or less	---
Balance weights		10g, 20g, 30g	---
Tires:			
Air pressure (when cold):			
	Front	200 kPa (2.0 kg/cm², 28 psi)	---
	Rear	250 kPa (2.5 kg/cm², 36 psi)	---
Tread depth:			
	Front	BRIDGESTONE: 6.2 mm DUNLOP: 4.5 mm	1 mm
	Rear	BRIDGESTONE: 7.2 mm DUNLOP: 7.3 mm	up to 130 km/h (80 mph): 2 mm over 130 km/h (80 mph): 3 mm
		Make, Type	Size
Standard tires:	Front	BRIDGESTONE EXEDRA G703, Tube DUNLOP D404FG, Tube	130/90-16 67H
	Rear	BRIDGESTONE EXEDRA G702, Tube DUNLOP D404, Tube	150/80-16 71H

Special Tools – Jack: 57001-1238
Attachment Jack: 57001-1398
Bead Breaker Assembly: 57001-1072
Rim Protector: 57001-1063
Inside Circlip Pliers: 57001-143
Bearing Driver Set: 57001-1129
Bearing Remover Shaft: 57001-1377
Bearing Remover Head, Φ20 x Φ22: 57001-1293

Wheels (Rim)

Rear Wheel Removal

● Remove:
Rear Fender [A] (see Frame chapter)
Front and Rear Mufflers [B] (see Engine Top End chapter)

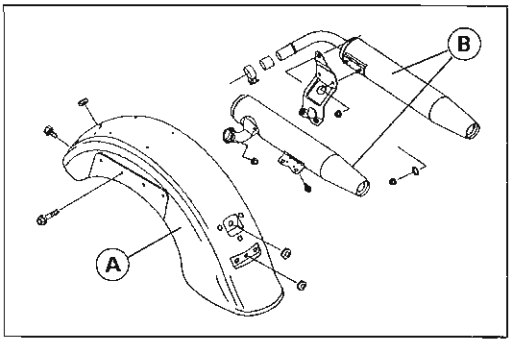

● Remove:
Caliper Holder Bolt [A]
Axle Nut Cotter Pin [B]
Axle Nut [C]

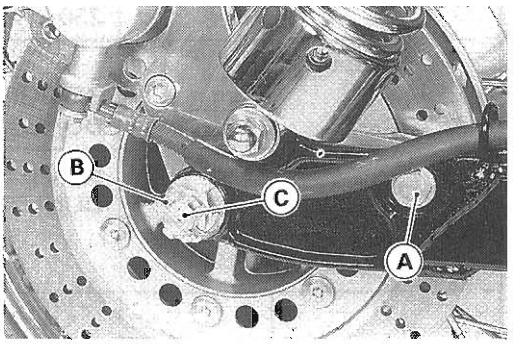

● Use the jack and the attachment or other suitable means to lift the rear of the motorcycle.

Special Tools – Jack: 57001-1238 [A]
Attachment Jack: 57001-1398 [B]

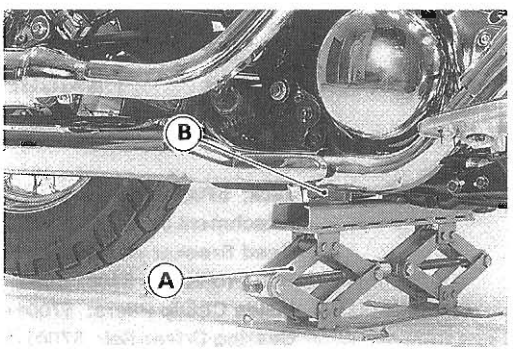

● Pull out the axle, and slide the rear wheel toward the right to disengage the wheel from the final gear case.
● Move the rear wheel [A] back and remove the rear caliper [B] with the caliper bracket [C] installed.

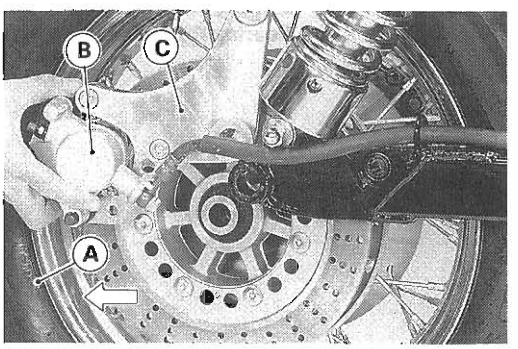

Rear Wheel Installation

● Apply grease to the grease seal of the wheel.
● Apply grease to the ring gear hub splines [A] of the final gear case [B].
● Insert the collars [C] on both sides of the hub.

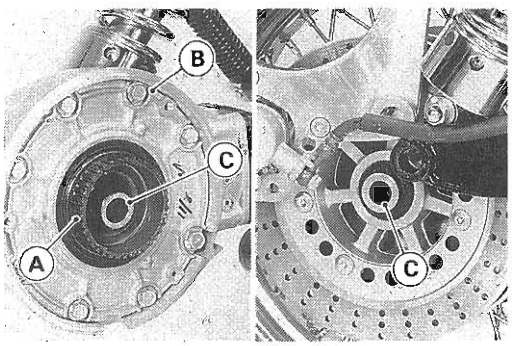

● Insert the rear axle [A] into the final gear case from the left side, and engage the ring gear hub splines [B] with the wheel coupling hub splines [C].
● Tighten:

Torque – Rear Axle Nut: 110 N-m (11.0 kg-m, 80 ft-lb)
Rear Caliper Holder Bolt: 64 N-m (6.5 kg-m, 47 ft-lb)

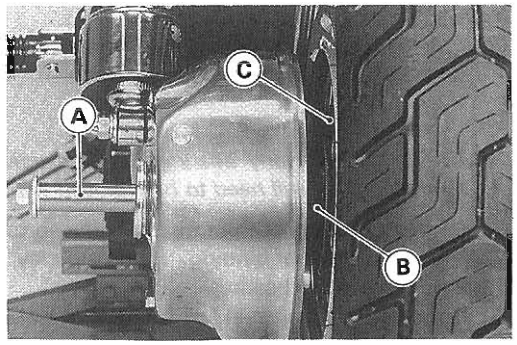

⚠WARNING

If the axle nut is not securely tightened, an unsafe riding condition may result.

● Insert a new cotter pin [A] and bend it over the nut as shown.
● Check the rear brake effectiveness.

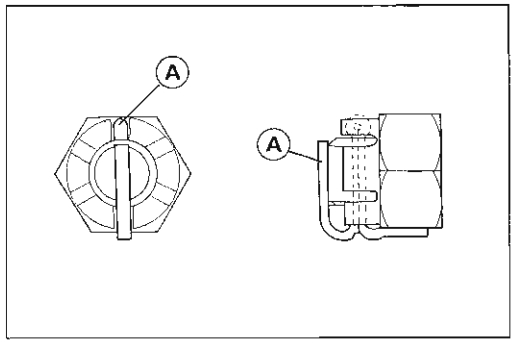

⚠WARNING

Do not attempt to drive the motorcycle until a full brake pedal is obtained by pumping the brake pedal until the pads are against the disc. The brake will not function on the first application of the pedal if this is not done.

Hub Bearings (Wheel Bearings)

Inspection

○Since the hub bearings are made to extremely close tolerances, the clearance cannot normally be measured.

NOTE

○*Do not remove any bearings for inspection. If any bearings are removed, they will need to be replaced with new ones.*

●Turn each bearing in the hub back and forth [A] while checking for plays, roughness, or binding. If bearing play, roughness, or binding is found, replace the bearing.

●Examine the bearing seal [B] for tears or leakage.

★If the seal is torn or is leaking, replace the bearing.

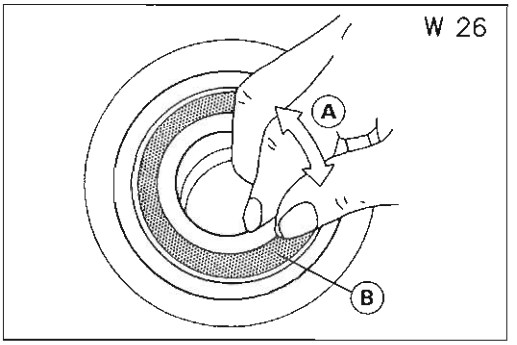

Lubrication

NOTE

○*Since the front and rear hub bearings are packed with grease and sealed, lubrication is not required.*

Final Drive

Table of Contents

Exploded View 10-2
Specifications 10-4
Final Gear Case Oil ..... *
  Oil Level Inspection ..... *
  Oil Change ..... *
Final Gear Case ..... *
  Removal ..... *
  Installation Notes ..... *
  Disassembly ..... *
  Assembly Notes ..... *
  Bevel Gear Inspection ..... *
  Pinion Joint Inspection ..... *
  Ball Bearing Inspection ..... *
  Needle Bearing Inspection ..... *
  Oil Seal Inspection ..... *
  Final Bevel Gear Adjustment ..... *
  Bevel Gear Inspection ..... *
  Pinion Gear Bearing Inspection ..... *
  Oil Seal Inspection ..... *
Propeller Shaft ..... *
  Removal ..... *
  Installation Notes ..... *
  Sliding Joint Inspection ..... *
  Propeller Shaft Inspection ..... *
  Sliding Joint Inspection ..... *
Front Bevel Gears 10-5
  Front Gear Case Removal 10-5
  Front Gear Case Installation ..... *
  Front Gear Case Disassembly (including drive gear removal) ..... *
  Front Gear Case Assembly (including drive gear installation) ..... *
  Driven Gear Disassembly ..... *
  Damper Cam Removal ..... *
  Damper Cam Installation Notes ..... *
  Front Bevel Gear Adjustment 10-6
  Bevel Gear Inspection ..... *
  Cam Damper Inspection ..... *
  Ball Bearing Inspection ..... *
  Tapered Roller Bearing Inspection ..... *
  Needle Bearing Inspection ..... *
  Oil Seal Inspection ..... *

(*): Refer to Base Manual.

Exploded View

Front Gears

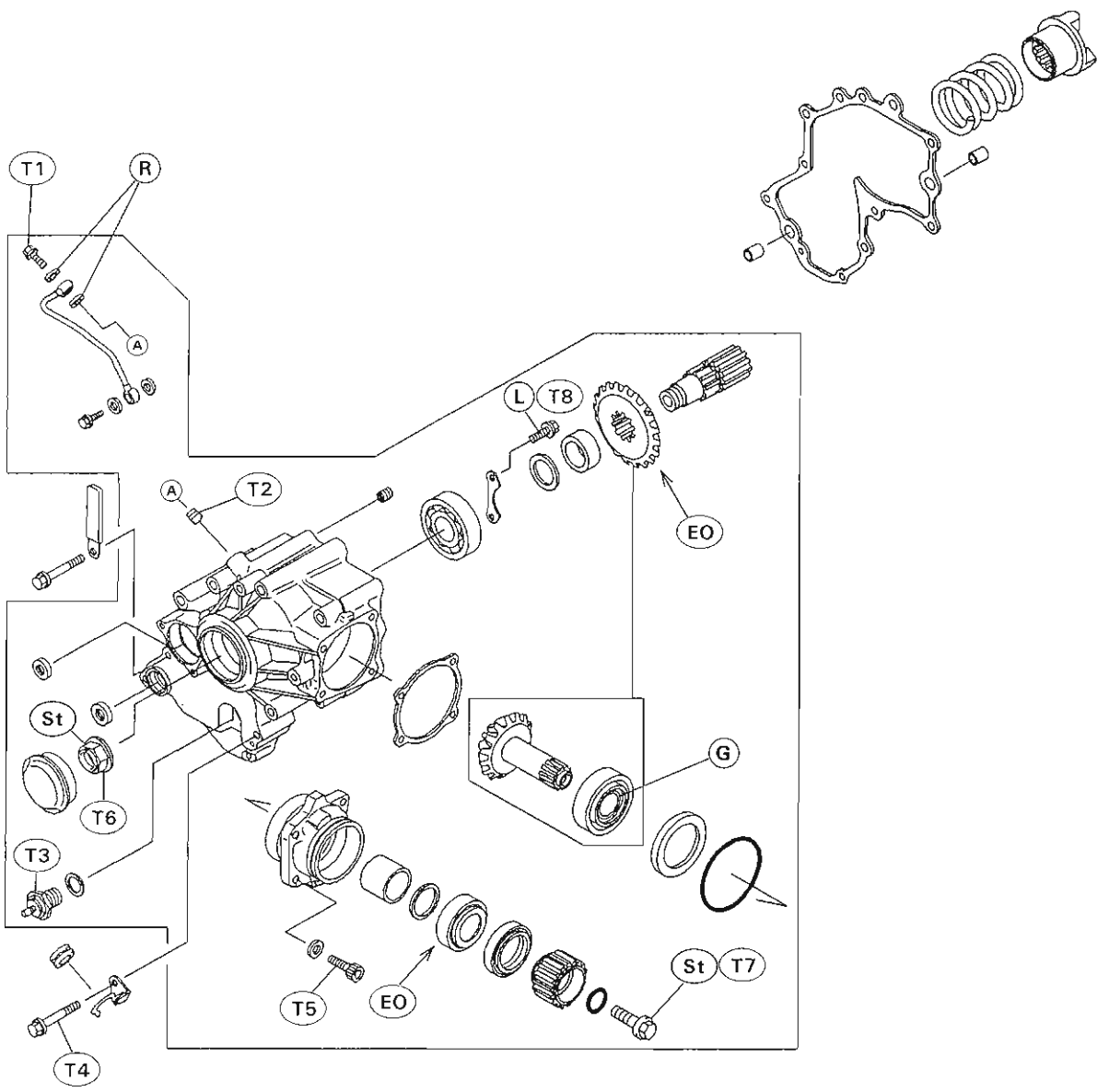

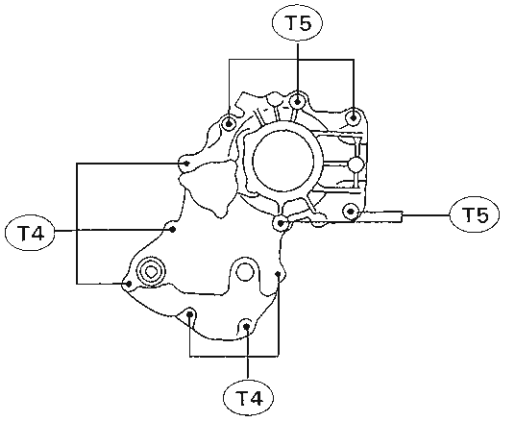

EO: Apply engine oil.
G: Apply grease.
R: Replacement Parts
St: Stake the fasteners.
T1: 12 N-m (1.2 kg-m, 104 in-lb)
T2: 18 N-m (1.8 kg-m, 13.0 ft-lb)
T3: 15 N-m (1.5 kg-m, 11.0 ft-lb)
T4: 9.8 N-m (1.0 kg-m, 87 in-lb)
T5: 25 N-m (2.5 kg-m, 18.0 ft-lb)
T6: 265 N-m (27.0 kg-m, 195 ft-lb)
T7: 135 N-m (14.0 kg-m, 100 ft-lb)
T8: 8.8 N-m (0.90 kg-m, 78 in-lb)

Final Gears

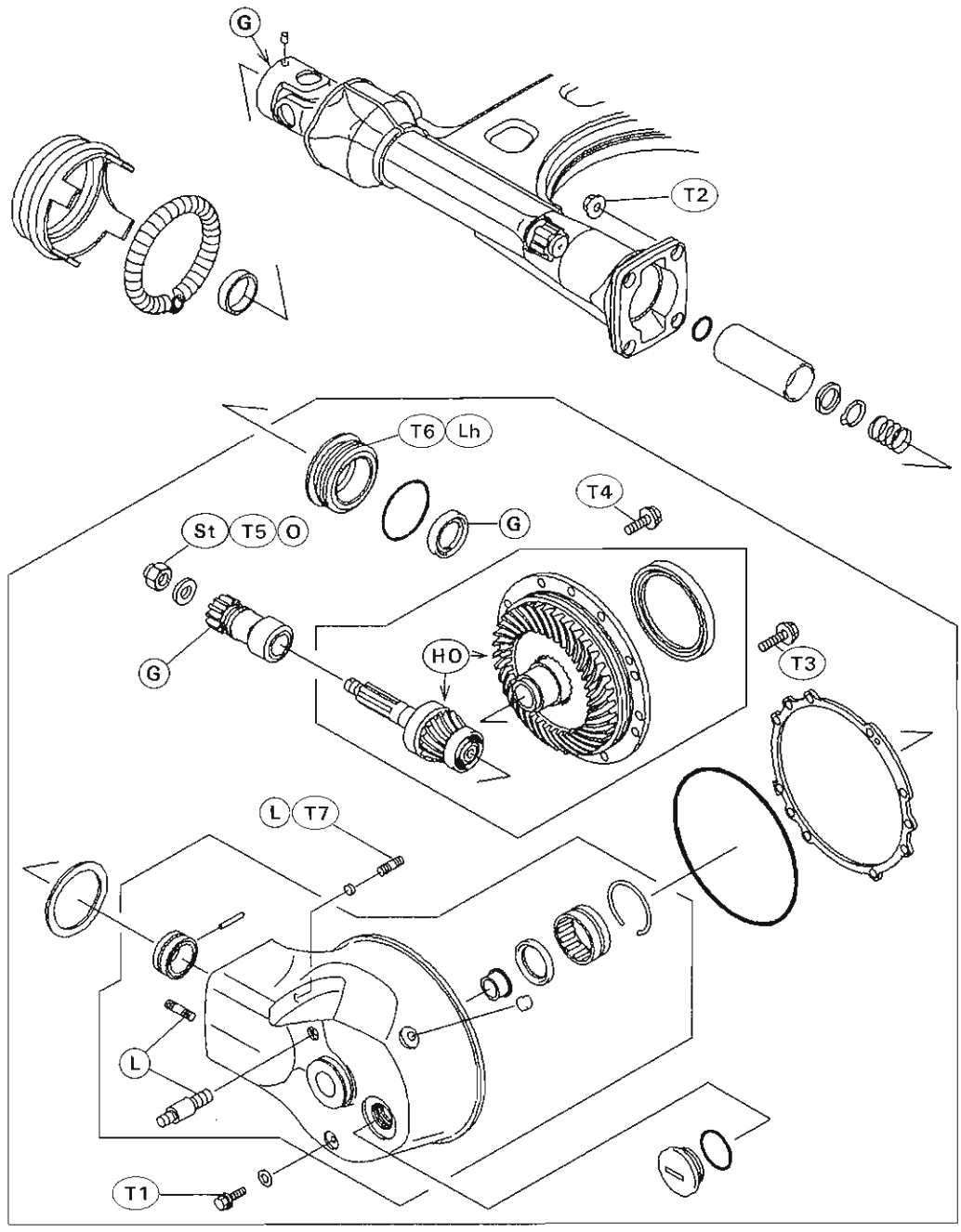

G: Apply grease.
L: Apply a non-permanent locking agent.
Lh: Left-hand Threads
O: Apply oil.
HO: Apply hypoid gear oil.
St: Stake the fasteners.

T1: 8.8 N-m (0.90 kg-m, 78 in-lb)
T2: 29 N-m (3.0 kg-m, 22 ft-lb)
T3: 23 N-m (2.3 kg-m, 16.5 ft-lb)
T4: 34 N-m (3.5 kg-m, 25 ft-lb)
T5: 120 N-m (12.0 kg-m, 87 ft-lb)
T6: 245 N-m (25.0 kg-m, 180 ft-lb)
T7: 16 N-m (1.6 kg-m, 11.5 ft-lb)

Specifications

Item		Standard
Final Gear Case Oil		
	Grade	API GL-5 hypoid gear oil
	Viscosity	When above 5°C (41°F) SAE90 When below 5°C (41°F) SAE80
	Oil level	Filler opening bottom
	Amount	200 mL
Final Bevel Gear Backlash		0.08 ~ 0.11 mm (at gear shaft spline)
Propeller Shaft Joint Grease		20 mL, high-temperature grease
Front Bevel Gear Backlash		0.10 ~ 0.15 mm (at gear tooth)
Preload for Front Bevel Gear Bearing		
	Torque wrench	0.5 ~ 0.9 N-m (0.05 ~ 0.09 kg-m, 4 ~ 8 in-lb)
	Spring scale	2.5 ~ 4.5 N (0.25 ~ 0.45 kg, 0.6 ~ 1.0 lb)

Special Tools – **Oil Seal & Bearing Remover: 57001-1058**
Jack: 57001-1238
Attachment Jack: 57001-1398
Pinion Gear Holder: 57001-1165
Final Gear Case Holder: 57001-1250
Bearing Retainer Wrench: 57001-1251
Fork Oil Seal Driver: 57001-1104
Drive Shaft Holder: 57001-1226
Bearing Driver Set: 57001-1129
Bearing Driver: 57001-382
Damper Cam Holder: 57001-1025
Driven Gear Holder: 57001-1027
Bearing Puller: 57001-158
Bearing Puller Adapter: 57001-317

Front Bevel Gears

Front Gear Case Removal

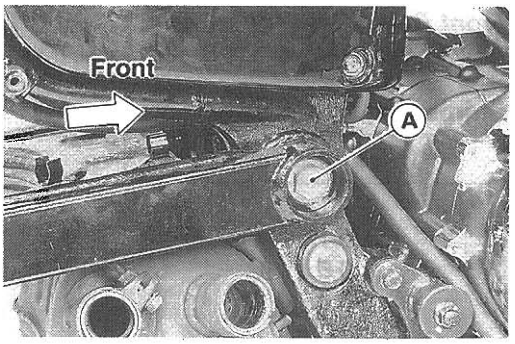

● Remove:
Rear Wheel (see Wheels/Tires chapter)
Swingarm Pivot Shaft [A]
Alternator Outer Cover (see Electrical System chapter)

● Remove the propeller shaft from the front driven gear joint.
○ Turn the propeller shaft so that the lockpin access hole [A] on the propeller shaft faces outside.
● Push on the lockpin through the access hole.

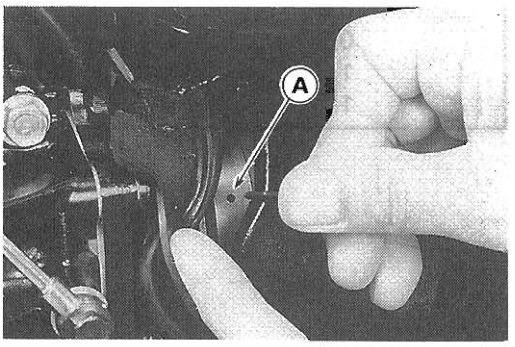

○ Move back the propeller shaft and slip the propeller shaft off the driven gear joint while pushing on the lockpin.

Propeller Shaft [A]
Universal Joint [B]
Lockpin [C]
Spring [D]
Driven Gear Joint [E]

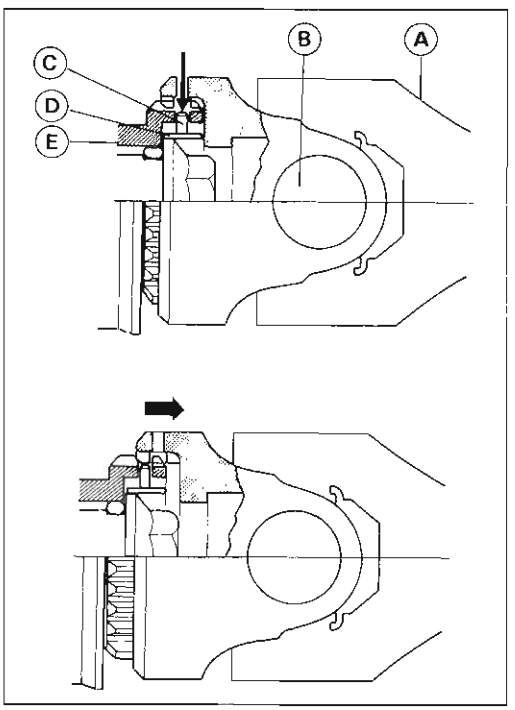

● Remove:
Clutch Slave Cylinder [A] (see Clutch chapter in the Base Manual)
Shift Linkage Lever Rear End [B]
● Unscrew the front bevel gear case bolts [C] to remove the front bevel gear case [D].

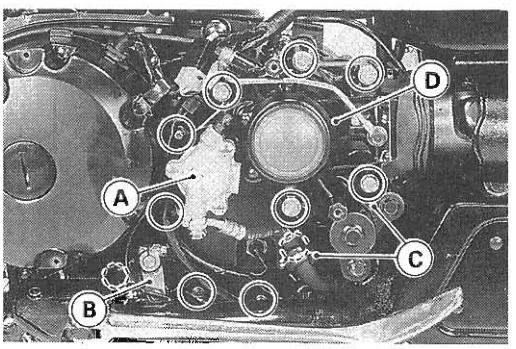

Front Bevel Gear Adjustment

Refer to p. 10-23 of the Base Manual, noting the following. Change the shims for driven gear as follows.

Shims for Driven Gear

Thickness (mm)	Old Part Number → Modified Part Number	
0.1	92025-1115	92025-1826
0.15	92025-1078	92025-1818
0.5	92025-1079	92025-1819
0.6	92025-1080	92025-1820
0.7	92025-1081	92025-1821
0.8	92025-1082	92025-1822
0.9	92025-1083	92025-1823
1.0	92025-1084	92025-1824
1.2	92025-1085	92025-1825

Brakes

Table of Contents

Exploded View 11-2
Specifications 11-4
Brake Lever, Brake Pedal 11-5
  Brake Lever Position Adjustment 11-5
  Brake Pedal Position Adjustment 11-5
  Brake Pedal Removal 11-5
  Brake Pedal Installation 11-6
Calipers 11-7
  Front Caliper Removal ..... *
  Rear Caliper Removal ..... *
  Caliper Installation ..... *
  Caliper Disassembly 11-7
  Assembly Notes ..... *
Brake Pads 11-9
  Front Brake Pad Removal 11-9
  Rear Brake Pad Removal 11-9
  Installation 11-9
  Brake Pad Wear Inspection 11-10
Master Cylinders 11-11
  Front Master Cylinder Installation 11-11
  Rear Master Cylinder Removal 11-11
  Rear Master Cylinder Installation 11-12
  Inspection and Adjustment after Installation ..... *
  Disassembly ..... *
  Assembly ..... *
  Inspection (Visually) ..... *
Brake Disc ..... *
  Wear ..... *
  Warp ..... *
Brake Fluid ..... *
  Fluid Level Inspection ..... *
  Brake Fluid Change ..... *
  Bleeding the Brake Line ..... *

(*): Refer to Base Manual.

Exploded View

B: Apply brake fluid.
G: Apply grease.
R: Replacement Parts
S: Follow the specific tightening sequence.
Si: Apply silicone grease or PBC grease.
T1: 7.8 N-m (0.80 kg-m, 69 in-lb)
T2: 25 N-m (2.5 kg-m, 18.0 ft-lb)
T3: 1.0 N-m (0.10 kg-m, 9 in-lb)
T4: 5.9 N-m (0.60 kg-m, 52 in-lb)
T5: 1.5 N-m (0.15 kg-m, 13 in-lb)
T6: 1.2 N-m (0.12 kg-m, 10 in-lb)
T7: 8.8 N-m (0.90 kg-m, 78 in-lb)
T8: 34 N-m (3.5 kg-m, 25 ft-lb)
T9: 23 N-m (2.3 kg-m, 16.5 ft-lb)

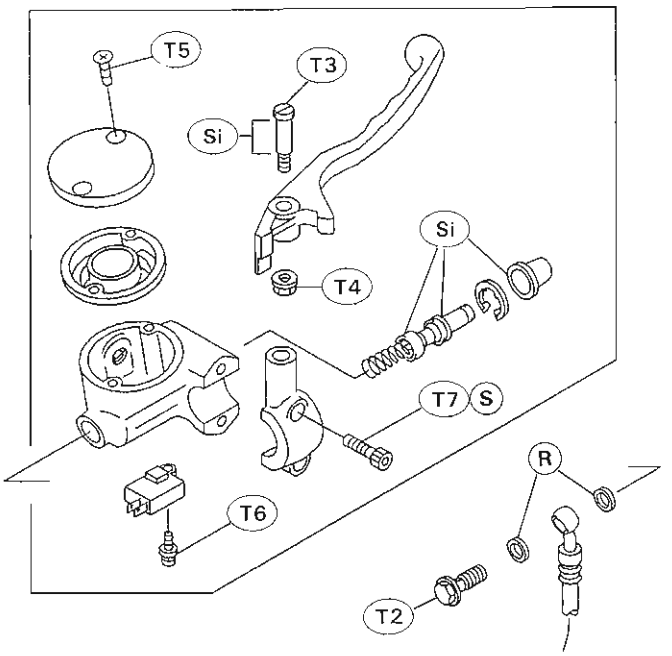

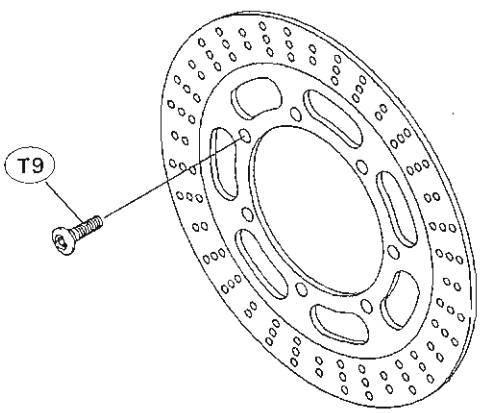

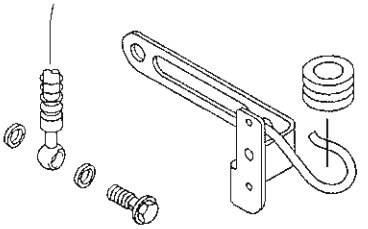

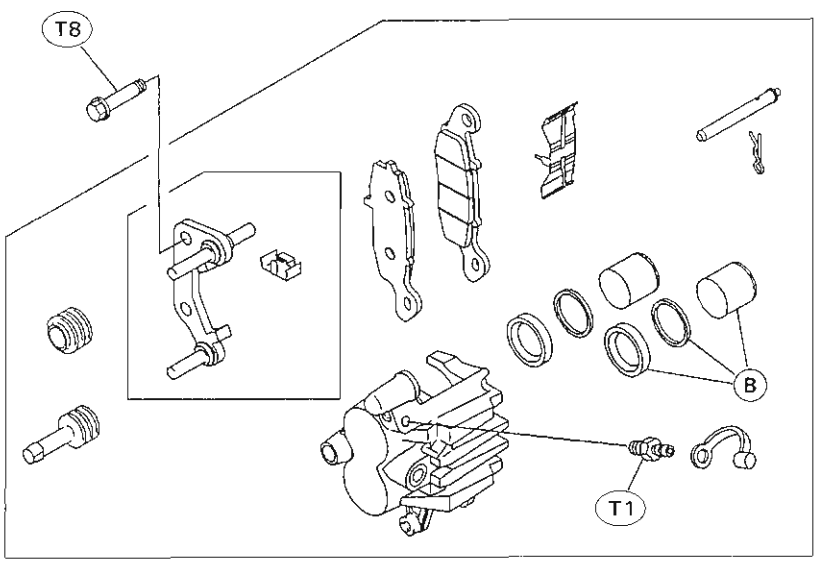

1. Align the marks.
T1: 32 N-m (3.3 kg-m, 24 ft-lb)
T2: 64 N-m (6.5 kg-m, 47 ft-lb)
T3: 23 N-m (2.3 kg-m, 16.5 ft-lb)
T4: 25 N-m (2.5 kg-m, 18.0 ft-lb)
T5: 18 N-m (1.8 kg-m, 13.0 ft-lb)

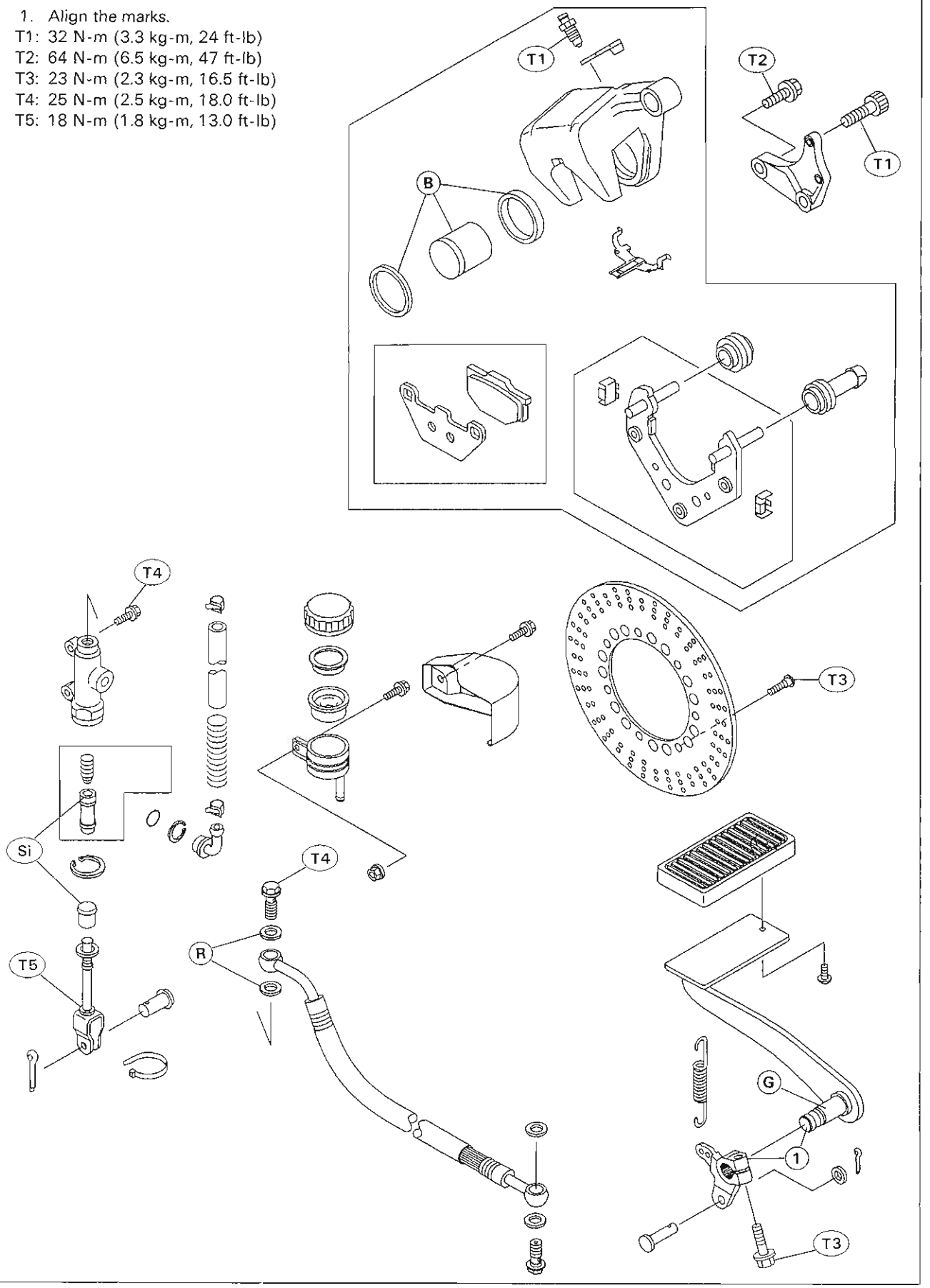

Specifications

Item		Standard	Service Limit
Brake Lever, Brake Pedal:			
Brake lever position		4-way adjustable (to suit rider)	– – –
Brake lever free play		Non-adjustable	– – –
Pedal free play		Non-adjustable	– – –
Pedal position		About 125 mm (vertical distance from pedaltip to footpeg top)	– – –
Brake Fluid			
Grade		D.O.T. 4	– – –
Brand (recommended)		Castrol Girling-Universal	– – –
		Castrol GT (LMA)	– – –
		Castrol Disc Brake Fluid	– – –
		Check Shock Premium Heavy Duty	– – –
Brake Pads:			
Pad lining thickness:	Front	4.5 mm	1 mm
	Rear	4.85 mm	1 mm
Brake Discs:			
Thickness:	Front	5.8 ~ 6.2 mm	5.5 mm
	Rear	6.8 ~ 7.2 mm	6.0 mm
Runout		TIR 0.2 mm or less	TIR 0.3 mm

Special Tool – Inside Circlip Pliers: 57001-143
Jack: 57001-1238
Attachment Jack: 57001-1398

Brake Lever, Brake Pedal

Brake Lever Position Adjustment

The brake lever adjuster has 4 positions so that the brake lever position can be adjusted to suit the operator's hand.

- Push the lever forward and turn the adjuster [A] to align the number with the triangular mark [B] on the lever holder.

○ The distance from the grip to the lever is minimum at Number 4 and maximum at Number 1.

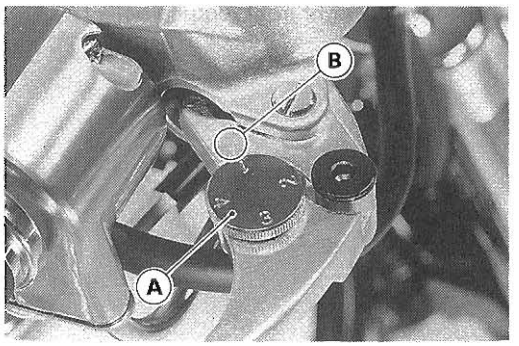

Brake Pedal Position Adjustment

- Check that the brake pedal [A] is in the correct position.

Pedal Position

Standard: **About 125 mm [B] (vertical distance from pedaltip to footpeg [C] top)**

NOTE

○ *Usually it's not necessary to adjust the pedal position, but always adjust it when push rod locknut [D] has been loosened.*

○ *If the push rod length cannot be adjusted by turning the clevis, the brake pedal may be deformed or incorrectly installed.*

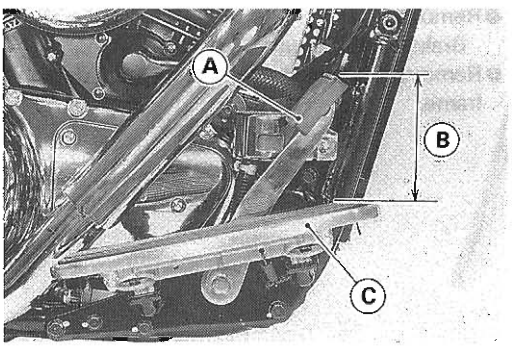

- Loosen the locknut [A] and turn the push rod with the hex head [B] to achieve the correct pedal position.

★ If the length [C] shown is **10 ±1 mm**, the pedal position will be within the standard range.

- Tighten:

Torque – Push Rod Locknut: 18 N-m (1.8 kg-m, 13.0 ft-lb)

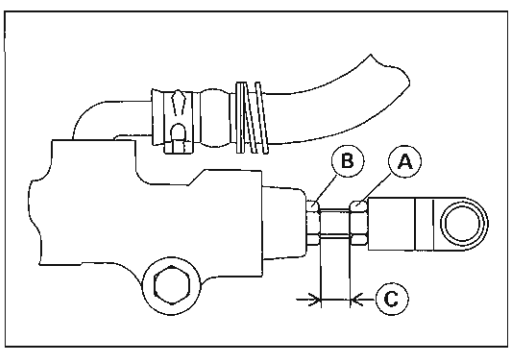

Brake Pedal Removal

- Loosen the brake pedal bolt [A].

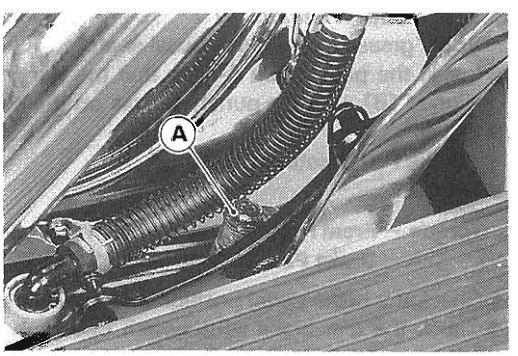

- Remove the fuel tank (see Fuel System chapter) and pull off the rear brake light switch connector [A].

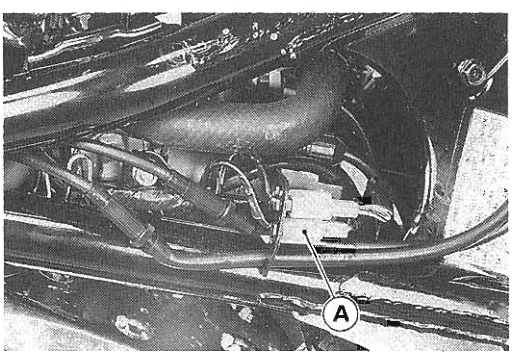

● Remove the right front footpeg bolts [A].

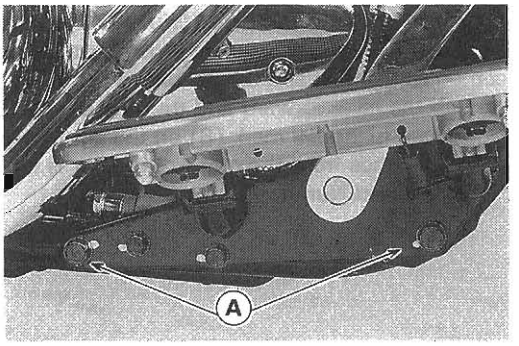

● Remove:
Brake Pedal Return Spring [A]
● Remove the brake pedal bolt [B] and detach the right footpeg from the frame.

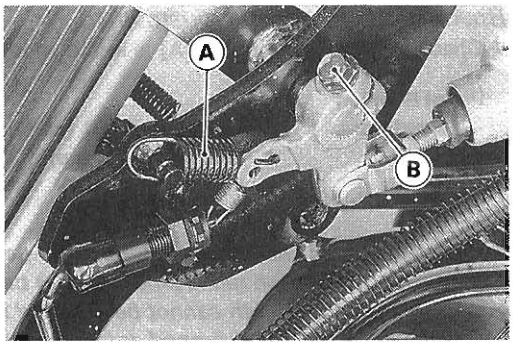

● Remove:
Footpeg Spring [A]
Circlips [B]
Pins [C]
● Remove the front footpeg, and pull off the brake pedal [D].

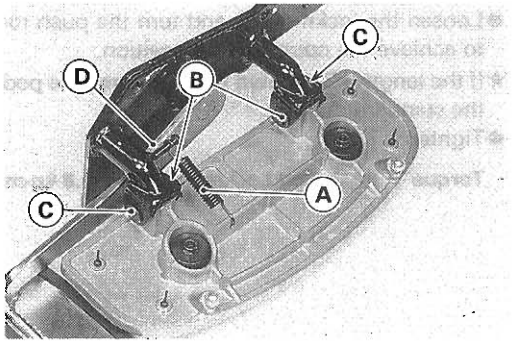

Brake Pedal Installation

● Apply grease to the brake pedal shaft.
● Install the pedal shaft [A] so that the punched mark on the shaft is aligned [B] with the punched mark on the brake lever [C].
● Install:
Brake Pedal Return Spring
● Tighten:

Torque – Front Footpeg Bolts: 34 N-m (3.5 kg-m, 25 ft-lb)
Brake Pedal Clamp Bolt: 23 N-m (2.3 kg-m, 16.5 ft-lb)

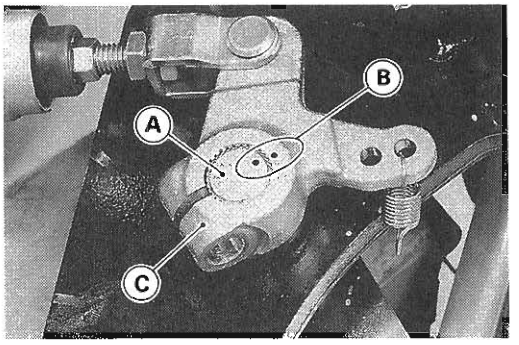

● Check the brake pedal position and adjust it if necessary.
● Check the rear brake light switch operation and adjust the switch if necessary (see Electrical System chapter).

Calipers

Front Caliper Removal

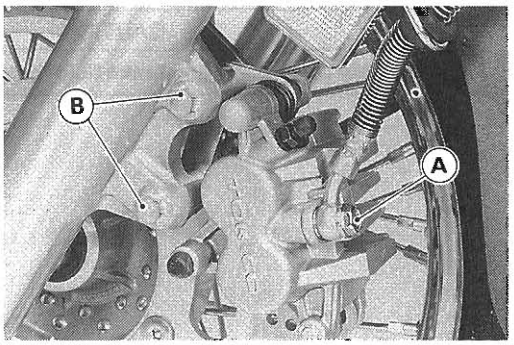

- Loosen the banjo bolt [A] at the brake hose lower end, and tighten it loosely.
- Unscrew the caliper mounting bolts [B].

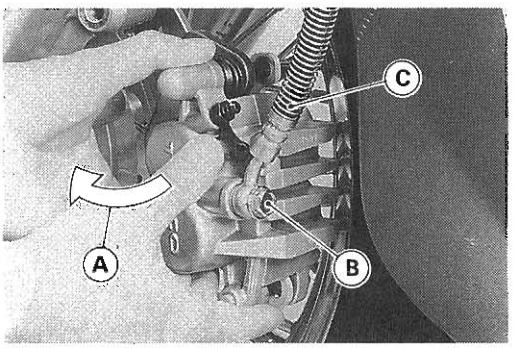

- Twist [A] the caliper outboard to clear the disc, and then take off the caliper.
- Unscrew the banjo bolt [B] and remove the brake hose [C] from the caliper.

CAUTION
Immediately wash away any brake fluid that spills.

NOTE

○ *If the caliper is to be disassembled after removal and if compressed air is not available, remove the piston(s) before the brake hose is removed (see Caliper Disassembly).*

Caliper Disassembly (Periodic Maintenance)

NOTE

○ *The procedure to disassemble the front caliper is as follows. The rear caliper disassembly is the same as for the front caliper.*

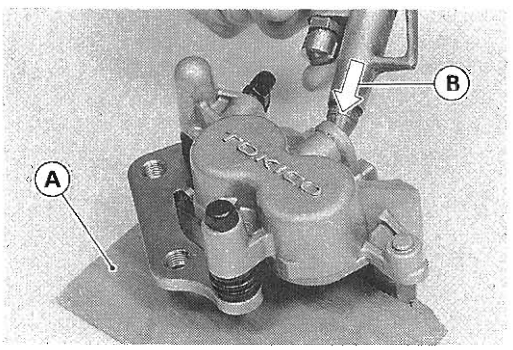

- Remove the caliper (see Caliper Removal in the Base Manual).
- Remove the pads and spring (see Pad Removal in the Base Manual).
- Insert a wooden board [A] 5 mm thick inside the caliper opening.
- Lightly apply compressed air [B] to the hose joint opening until the piston(s) hit the wooden board.
- Remove the board and pull out the piston(s) by hand.

⚠WARNING
To avoid serious injury, never place your fingers or palm inside the caliper opening. If you apply compressed air into the caliper, the piston(s) may crush your hand or fingers.

★ If compressed air is not available, remove the pistons using the following steps before disconnecting the brake hose from the caliper.

○ Remove the pads (see Brake Pad Removal).
○ Insert a wooden board 5 mm thick inside the caliper opening.
○ Pump the brake lever until the piston(s) push the wooden board.
○ Remove the caliper.
○ Remove the board and pull out the pistons by hand.

CAUTION
Immediately wash away any brake fluid that spills.

Brake Pads

Front Brake Pad Removal

- Remove the caliper with the hose installed.
- Remove:
  Clip [A]
  Pad Pin [B]
  Piston Side Pad [C]

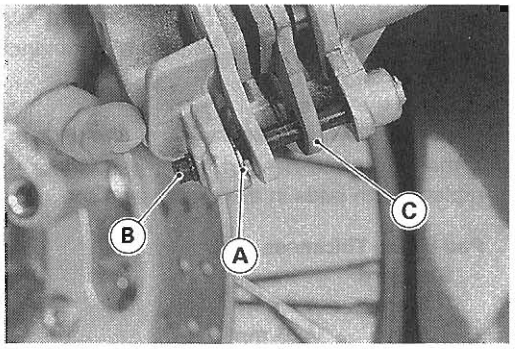

- Remove the other pad [A].

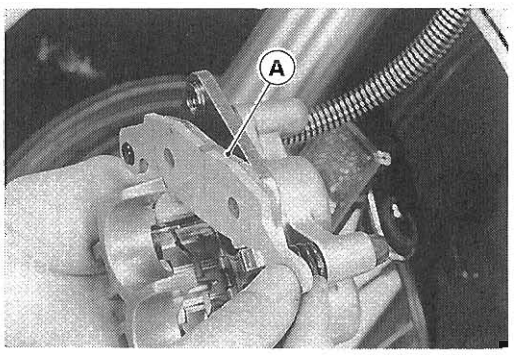

Rear Brake Pad Removal

- Remove the caliper with the hose installed.
- Take off the piston side pad from the caliper holder.
- Push [A] the caliper holder [B] to the piston side, and then remove the pad [C] from the caliper holder shaft [D].

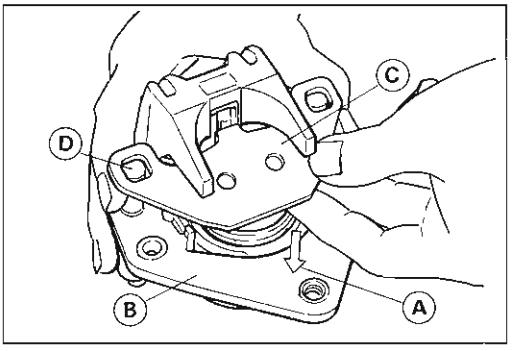

Installation

- Before installation, clean the pads with a high-flash point solvent.
- Push the caliper pistons in by hand as far as they will go.
- Be sure to install the pad pin clip for the front caliper.

⚠WARNING

Do not attempt to drive the motorcycle until a full brake lever or pedal is obtained by pumping the brake lever or pedal until the pads are against the disc. The brake will not function on the first application of the lever or pedal if this is not done.

Brake Pad Wear Inspection (Periodic Inspection)

In accordance with the Periodic Maintenance Chart, inspect the brake pads for wear.

- Remove the pads.
- Check the lining thickness [A] of the pads in each caliper.

★If the lining thickness of either pad is less than the service limit [B], replace both pads in the caliper as a set.

Pad Lining Thickness
Standard
Front: 4.5 mm
Rear: 4.85 mm
Service Limit: 1 mm

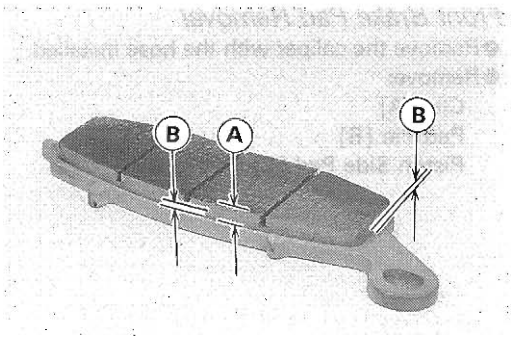

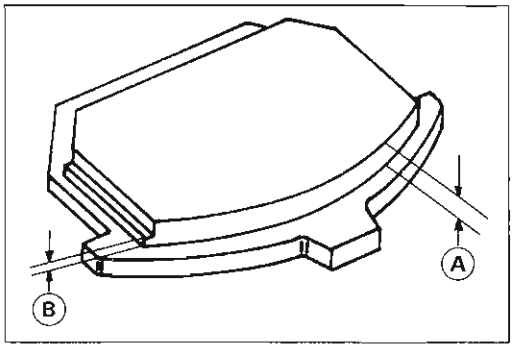

Master Cylinders

Front Master Cylinder Installation

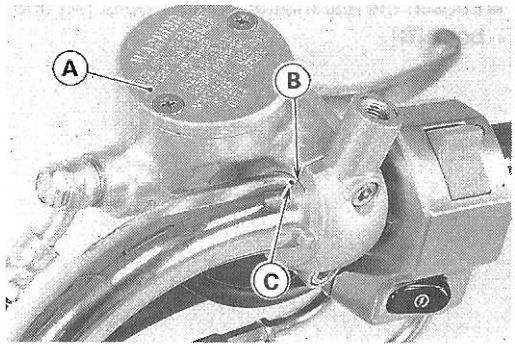

● Set the front master cylinder [A] to match its mating face [B] to the punch mark [C] of the handlebar.

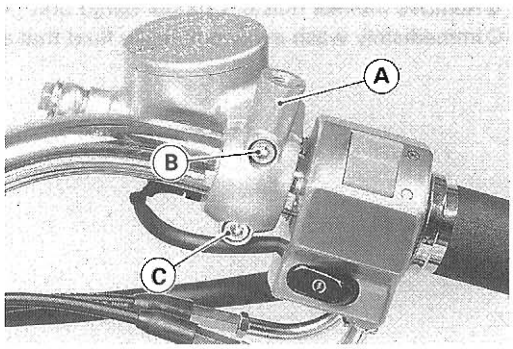

○ The master cylinder clamp must be installed with the rear view mirror boss [A] upward.

● Tighten the upper clamp bolt [B] first, and then the lower clamp bolt [C]. There will be a gap at the lower part of the clamp after tightening.

Torque – Front Master Cylinder Clamp Bolts: 8.8 N-m (0.90 kg-m, 78 in-lb)

● Use a new flat washer on each side of the brake hose fitting.

● Tighten the brake hose banjo bolt.

Torque – Brake Hose Banjo Bolt: 25 N-m (2.5 kg-m, 18.0 ft-lb)

● Replenish the fluid in the reservoir, and bleed the brake line (see Bleeding the Brake Line).

● Check the brake for proper braking power, no brake drag, and no fluid leakage.

Rear Master Cylinder Removal

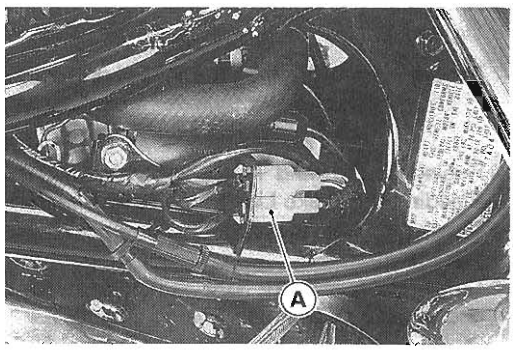

● Remove the fuel tank (see Fuel System chapter).

● Pull off the rear brake light switch connector [A].

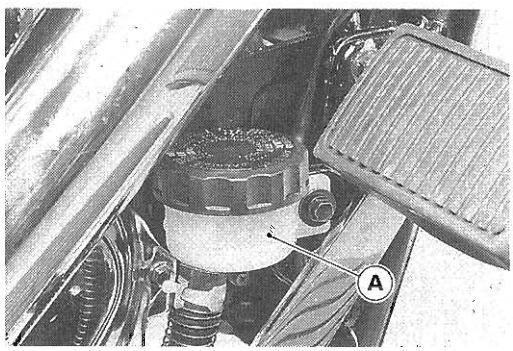

● Remove the brake fluid reservoir cover and take off the brake fluid reservoir [A].

● Loosen the rear master cylinder bolts [A] and remove the front footpeg bolts [B].

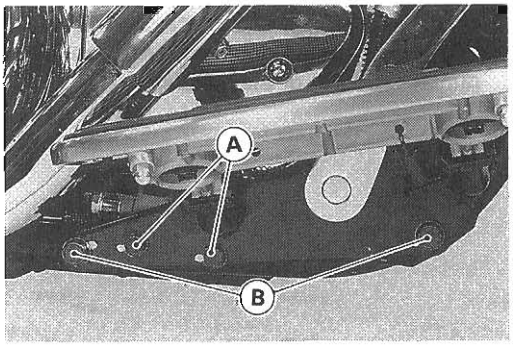

● Remove the rear master cylinder banjo bolt [A].
○ Immediately wash away any brake fluid that spills.

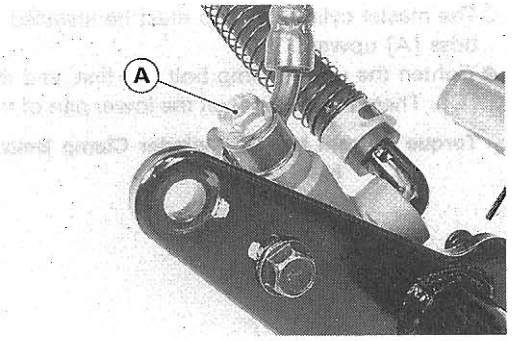

● Remove:
Cotter Pin [A]
Joint Pin [B]
● Remove the rear master cylinder bolts and take off the rear master cylinder.

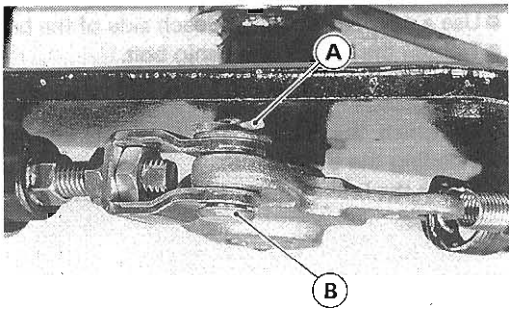

Rear Master Cylinder Installation

● Tighten:

Torque – Front Footpeg Bolts: 34 N-m (3.5 kg-m, 25 ft-lb)
Rear Master Cylinder Mounting Bolts: 25 N-m (2.5 kg-m, 18.0 ft-lb)

● Replenish the fluid in the reservoir, and bleed the brake line (see Bleeding the Brake Line in the Base Manual).
● Check the brake for proper braking power, no brake drag, and no fluid leakage.
● Check the rear brake light switch operation and adjust the switch if necessary (see Electrical System chapter).

Suspension

Table of Contents

Exploded View 12-2
Specifications 12-4
Front Fork 12-5
  Fork Oil Change 12-5
  Removal (each fork leg) 12-6
  Installation (each fork leg) ..... *
  Disassembly 12-6
  Assembly 12-8
  Inner Tube, Outer Tube Inspection 12-9
  Guide Bush Inspection ..... *
  Oil Seal and Dust Seal Inspection ..... *
  Spring Tension ..... *
Rear Shock Absorber ..... *
  Adjustment ..... *
  Removal ..... *
  Installation Notes ..... *
  Rear Shock Absorber Wear ..... *
  Bushing Wear ..... *
Swingarm 12-10
  Removal 12-10
  Installation 12-10
  Grease Seal and Needle Bearing Removal/Assembly ..... *
  Grease Seal and Needle Bearing Lubrication ..... *
  Sleeve and Needle Bearing Wear ..... *

(*): Refer to Base Manual.

Exploded View

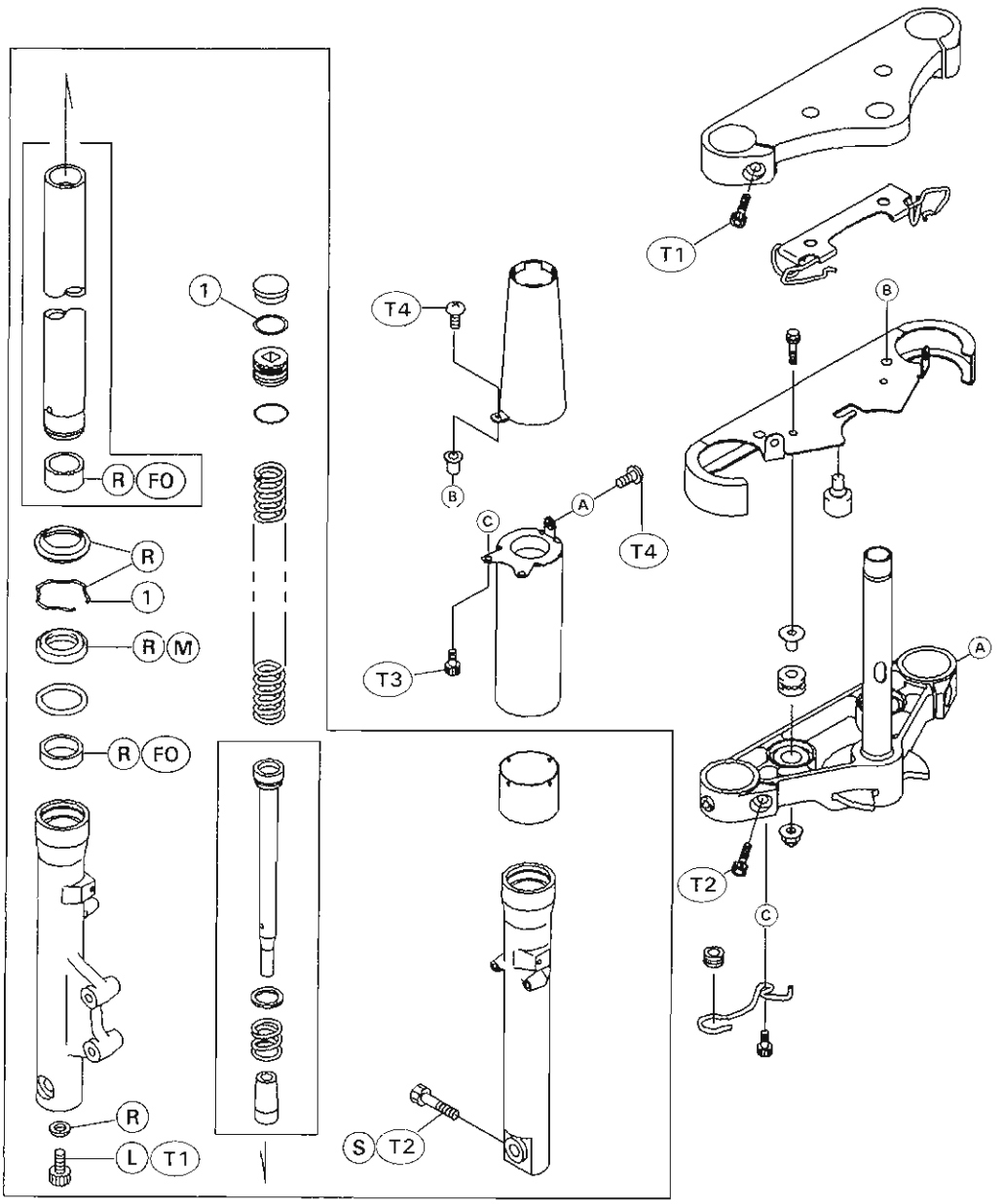

1. Retaining Ring
FO: Apply fork oil.
L: Apply a non-permanent locking agent.
M: Apply molybdenum disulfide grease.
R: Replacement Parts
S: Follow the specific tightening sequence.

T1: 20 N-m (2.0 kg-m, 14.5 ft-lb)
T2: 34 N-m (3.5 kg-m, 25 ft-lb)
T3: 7.4 N-m (0.75 kg-m, 65 in-lb)
T4: 4.4 N-m (0.45 kg-m, 39 in-lb)

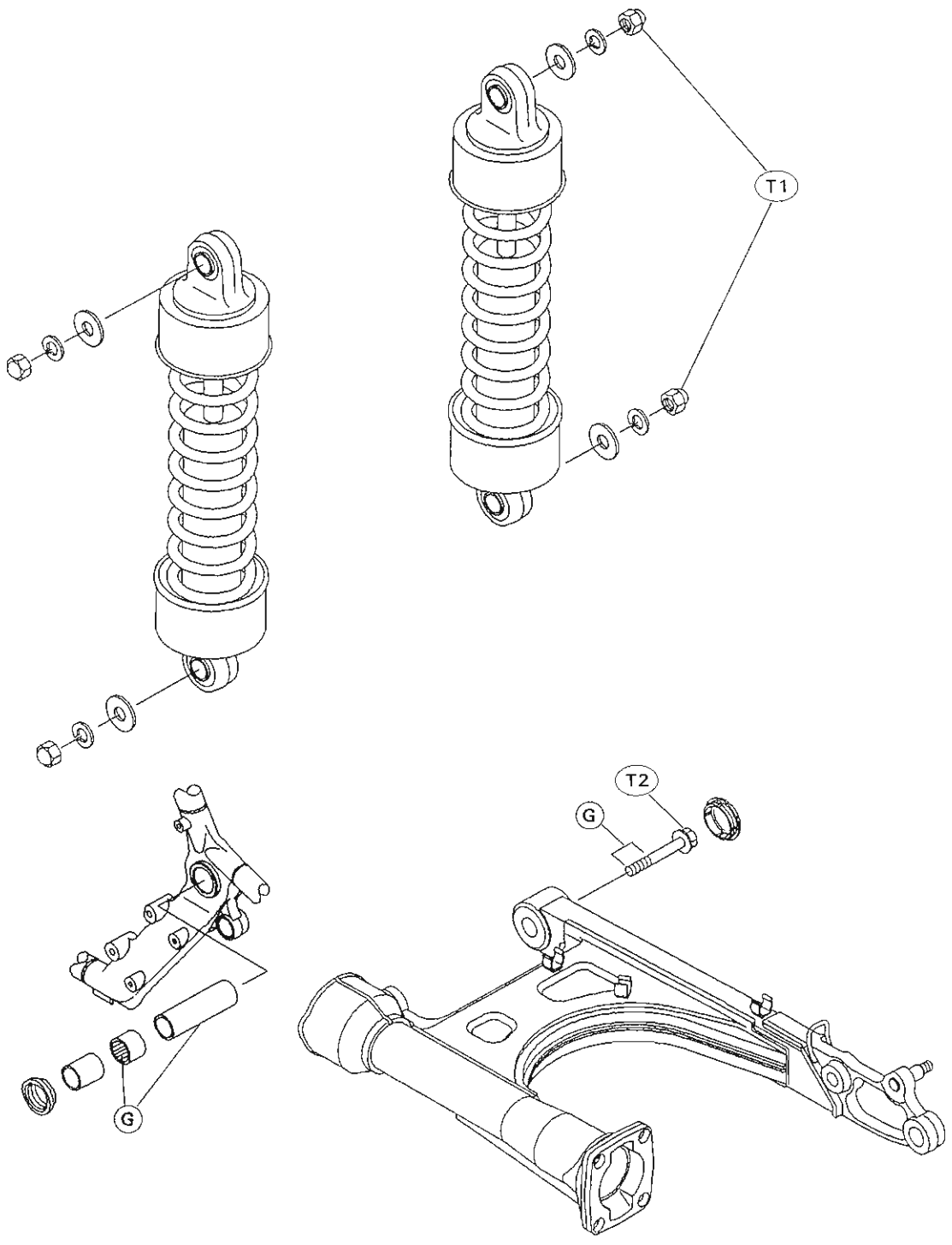

G: Apply grease.

T1: 34 N-m (3.5 kg-m, 25 ft-lb)
T2: 125 N-m (13.0 kg-m, 94 ft-lb)

Specifications

Item	Standard
Front Fork (per one unit):	
Fork inner tube diameter	Φ 41 mm
Fork spring setting	Non-adjustable
Air pressure	Atmospheric pressure (Non-adjustable)
Rebound damper setting	Non-adjustable
Fork oil viscosity	SAE 10W-20
Fork oil capacity	464 ± 4 mL (completely dry) approx. 395 mL (when changing oil)
Fork oil level	Fully compressed, without fork spring, below from inner tube top 137 ±2 mm
Fork spring free length	560.2 mm (Service limit: 550 mm)
Rear Shock Absorber:	
Rebound damper set	Non-adjustable
Spring setting position	No. 2 of 5 positions
Gas pressure	No gas

Special Tools – **Jack: 57001-1238**
Attachment Jack: 57001-1398
Fork Oil Level Gauge: 57001-1290
Fork Cylinder Holder Handle: 57001-183
Fork Cylinder Holder Adapter: 57001-1057
Fork Outer Tube Weight: 57001-1218
Front Fork Oil Seal Driver: 57001-1219
Oil Seal & Bearing Remover: 57001-1058
Bearing Driver Set: 57001-1129

Front Fork

Fork Oil Change (Periodic Maintenance)

The oil should be changed in accordance with the Periodic Maintenance Chart.

- Remove the front fork (see Front Fork Removal).
- Hold the outer tube vertically in a vise.
- Push the top plug [A] down to remove the plug retaining ring [B], and then remove the plug.

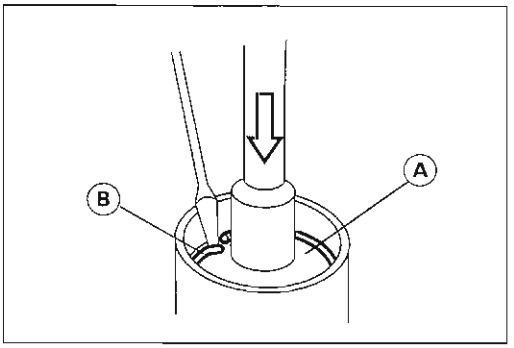

- Remove:
  Fork Spring [A]

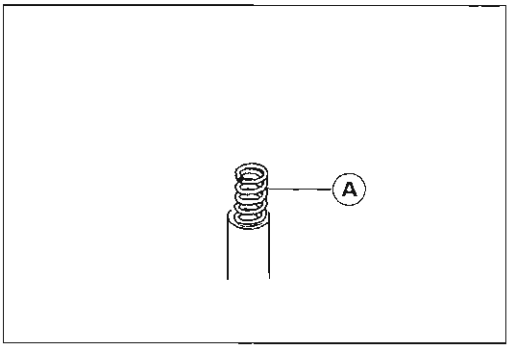

- Pour out the fork oil [A] with the fork upside down.
- Hold the outer tube vertically in a vise.
- Fill the front fork with the specified oil.

Fork Oil Viscosity : SAE10W-20
Fork Oil Capacity (when changing oil) : Approx. 395 mL

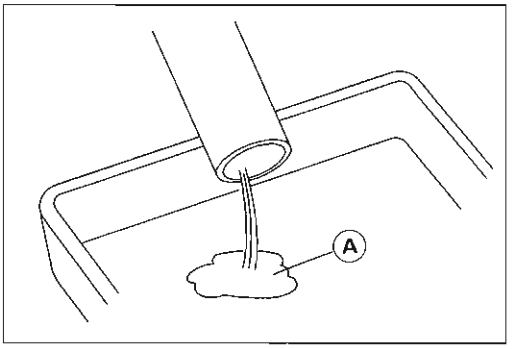

- Wait for about five minutes so that any suspended air bubbles can surface.
- Measure the oil level, using the fork oil level gauge [A].

Special Tool – Fork Oil Level Gauge: 57001-1290

- ○ Set the gauge stopper [B] so that its lower side shows the oil level distance specified [C].
- ○ Insert the gauge tube into the inner tube [D] and position the stopper across the top of the inner tube [E].
- ○ Pull the handle slowly to draw out the excess oil until no more oil comes up the tube.
- ★ If no oil is drawn out, there is not enough oil in the fork. Pour in some more oil, then draw out the excess.

Front Fork Oil Level (Fully compressed without fork spring)
Standard: 137 ±2 mm

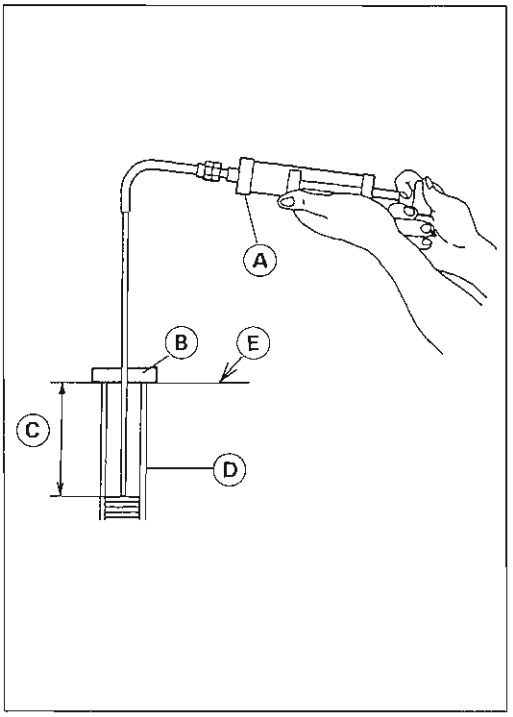

● Install the fork spring with the smaller diameter end [A] facing down.
● Tighten:

Torque – Upper Fork Clamp Bolts: 20 N-m (2.0 kg-m, 14.5 ft-lb)
Lower Fork Clamp Bolts: 34 N-m (3.5 kg-m, 25 ft-lb)
Front Axle Nut: 110 N-m (11.0 kg-m, 80 ft-lb)
Front Axle Clamp Bolts: 34 N-m (3.5 kg-m, 25 ft-lb)
Front Caliper Mounting Bolts: 34 N-m (3.5 kg-m, 25 ft-lb)

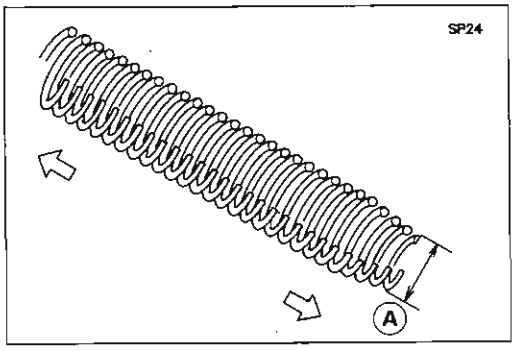

Removal (each fork leg)

● Lift the front wheel off the ground, using the jack [A], the attachment jack [B], and a suitable jack [C].

Special Tools – Jack: 57001-1238
Attachment Jack: 57001-1398

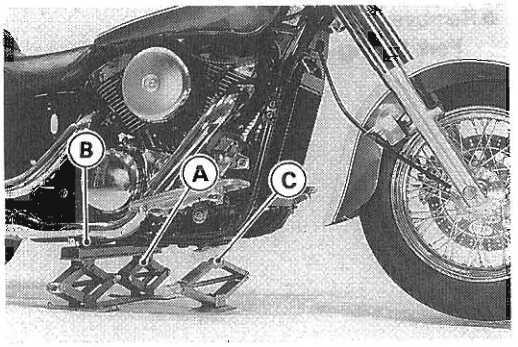

● Remove:
Front Caliper
Front Wheel (see Wheels/Tires chapter in the Base Manual)
Front Fender (see Frame chapter)
● Loosen:
Turn Signal Holder Clamp Bolt [A]
Upper Fork Clamp Bolt [B]
Lower Fork Clamp Bolt [C]

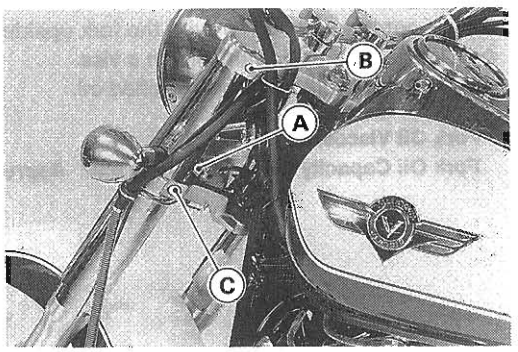

NOTE

○ *Do not remove the fork covers [A]. Refer to the Steering chapter for fork cover removal.*

● With a twisting motion [B], work the fork leg down out.

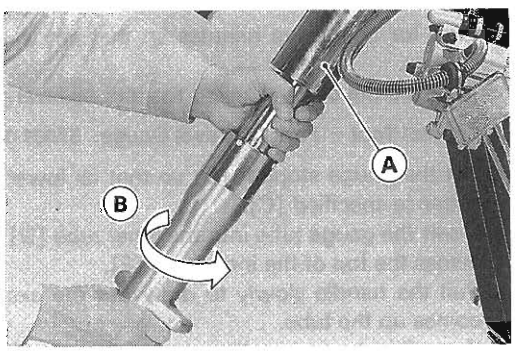

Disassembly

● Remove the front fork (see Front Fork Removal).
● Drain the fork oil (see Fork Oil Change).
○ The following parts are removed during draining the fork oil.
Retaining Ring [A]
Top Plug [B]
Fork Spring [C]

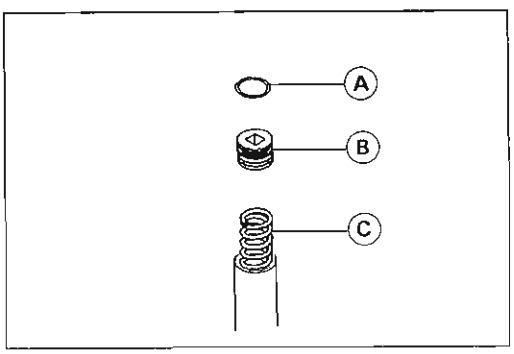

● Hold the front fork horizontally in a vise [A].
● Stop the cylinder unit [B] from turning by using the special tools.
● Unscrew the Allen bolt [C], and take the gasket out of the bottom of the outer tube.

Special Tools – Fork Cylinder Holder Handle: 57001-183 [D]
Fork Cylinder Holder Adapter: 57001-1057 [E]

● Take the cylinder unit out of the inner tube.

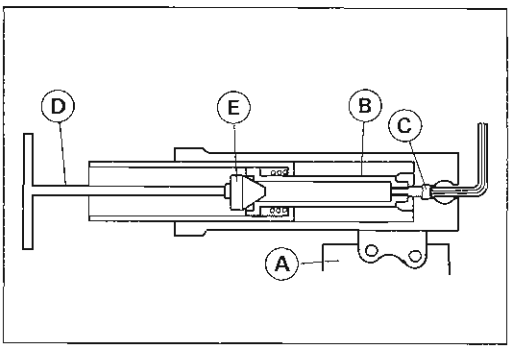

● Tap the dust seal cover [A] out of the fork tube, using a thick-bladed screwdriver.

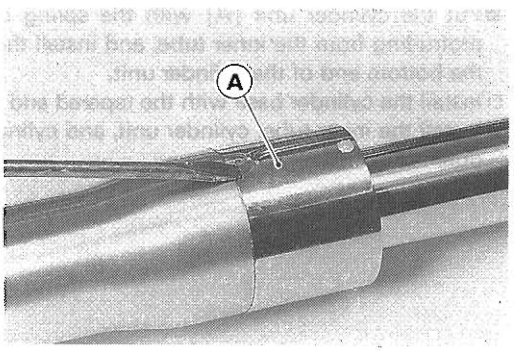

● Separate the inner tube from the outer tube as follows:
○ Remove the dust seal [A] from the outer tube.
○ Remove the retaining ring [B] from the outer tube.

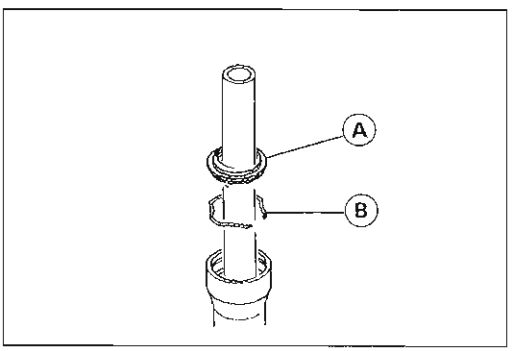

○ Use the fork outer tube weight [A] to separate the outer tube [B] from the inner tube [C]. Holding the inner tube by hand, pull the outer tube several times to pull out the inner tube.

Special Tool – Fork Outer Tube Weight: 57001-1218

○ Take out the cylinder base out of the outer tube.

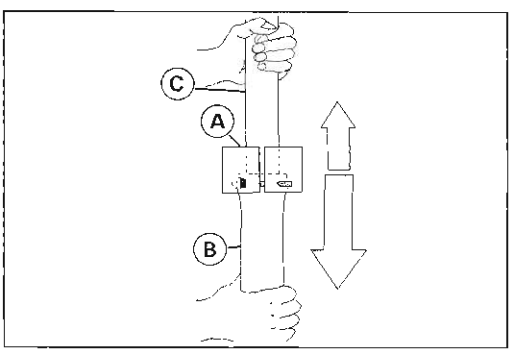

● Remove the guide bushings [A], washer [B], and oil seal [C] from the inner tube.

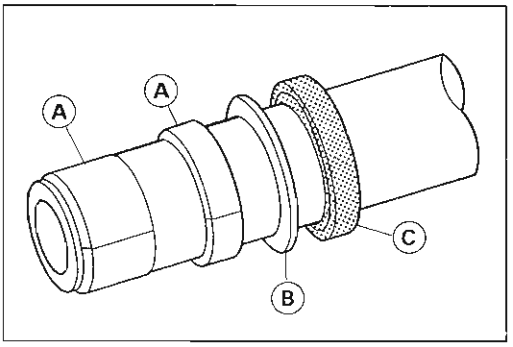

Assembly

● Replace the following parts with new ones after removal.
Dust Seal [A]
Retaining Ring [B]
Oil Seal [C]
Inner Guide Bushing [D]
Outer Guide Bushing [E]
Bottom Allen Bolt Gasket [F]

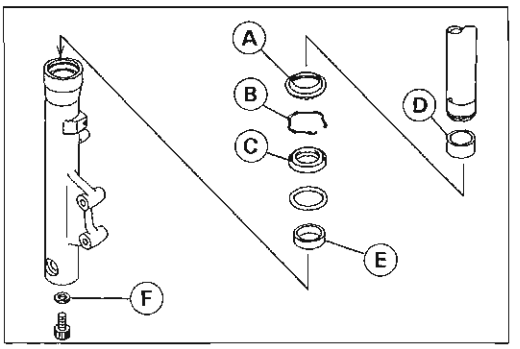

● Put the cylinder unit [A] with the spring into the inner tube [B], protruding from the inner tube, and install the cylinder base [C] onto the bottom end of the cylinder unit.
○ Install the cylinder base with the tapered end [D] up.
● Install the inner tube, cylinder unit, and cylinder base as a set into the outer tube.

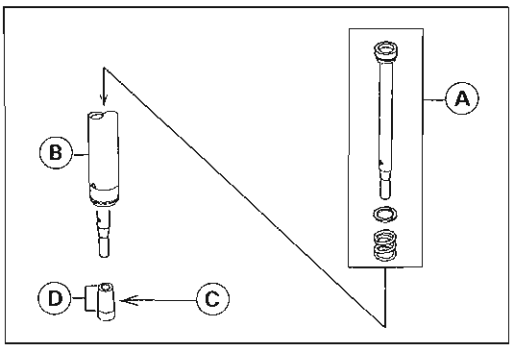

● Install the new guide bushing [A] with a used guide bushing [B] on it by tapping the used guide bushing with fork oil seal driver [C] until it stops.
○ The split [D] of the bushing should face toward the side of the vehicle.

Special Tool – Front Fork Oil Seal Driver: 57001-1219

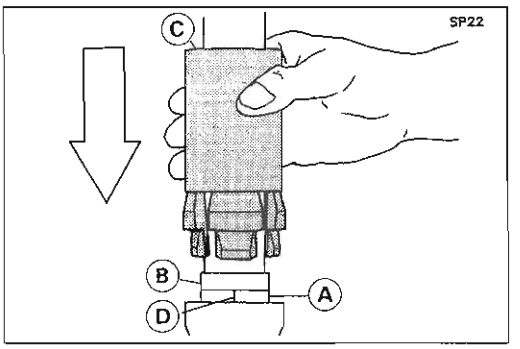

● Apply molybdenum disulfide grease to the oil seal lips and install the washer and the oil seal [A] into the outer tube.
○ Face the spring side of the seal upward.

Special Tool – Front Fork Oil Seal Driver: 57001-1219 [B]

● Install:
Retaining Ring
Dust Seal

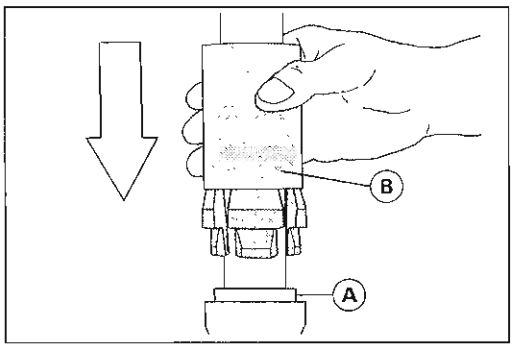

● Face the notch [A] of the dust seal cover rearward [B] and install the dust seal cover by tapping with the fork outer tube weight [C] until it stops.

Special Tool – Fork Outer Tube Weight: 57001-1218

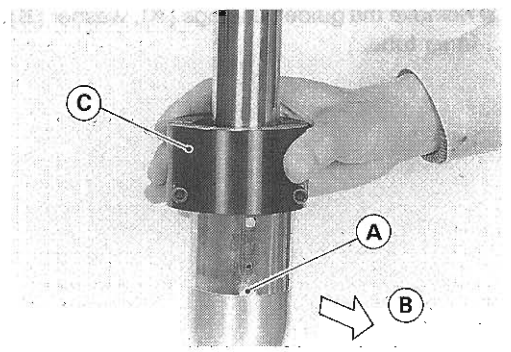

● Stake [A] the dust cover with a punch.

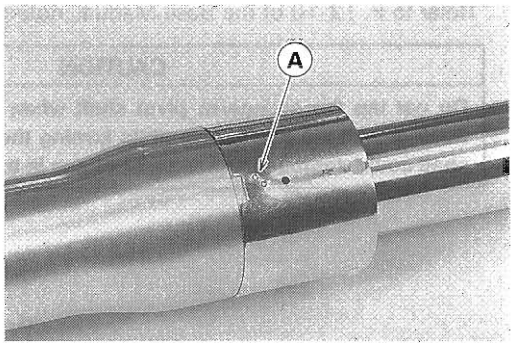

● Apply a non-permanent locking agent to the threads of the Allen bolt and screw the Allen bolt into the bottom of the outer tube.
● Hold the front fork horizontally in a vise [A].
● Hold the cylinder unit [B] with the special tools and tighten the Allen bolt [C].

Special Tools – Fork Cylinder Holder Handle: 57001-183 [D]
Fork Cylinder Holder Adapter: 57001-1057 [E]

Torque – Bottom Allen Bolt: 20 N-m (2.0 kg-m, 14.5 ft-lb)

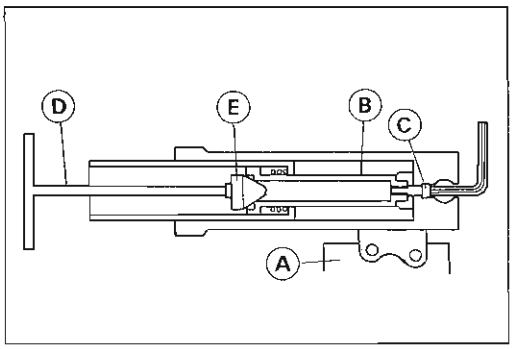

● Pour in the specified type of oil and install the parts removed (see Fork Oil Change).

Fork Oil Viscosity: SAE10W-20
Fork Oil Capacity (completely dry): 464 ±4 mL

Inner Tube, Outer Tube Inspection

● Visually inspect the inner tube [A] and repair any damage.
● Nick or rust damage can sometimes be repaired by using a wet-stone to remove sharp edges or raised areas which cause seal damage.
★ If the damage is not repairable, replace the inner tube. Since damage to the inner tube damages the oil seal, replace the oil seal whenever the inner tube is repaired or replaced.

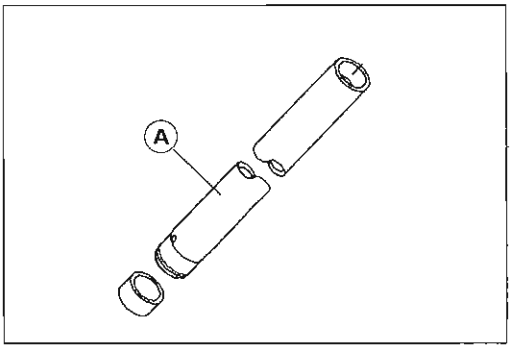

CAUTION

If the inner tube is badly bent or creased, replace it. Excessive bending, followed by subsequent straightening, can weaken the inner tube.

⚠WARNING

A straightened inner or outer fork tube [B] may fail in use, possibly, causing an accident. Replace a badly bent or damaged inner or outer tube, and inspect the other tube carefully before reusing it.

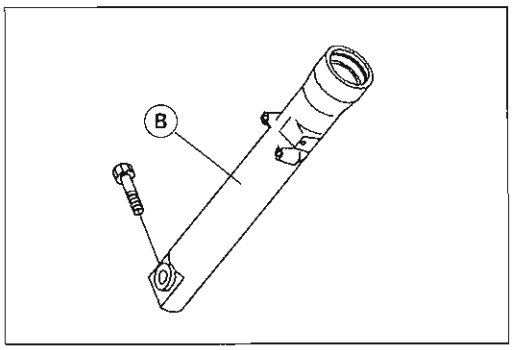

Swingarm

Refer to P. 12-10 of the Base Manual, noting the following.

CAUTION
Do not tap the swingarm pivot shaft when removing or installing. Push or pull the pivot shaft while turning the shaft. Tapping on the shaft could damage the needle bearings in the swingarm.

Removal

- Before removing the swingarm, unscrew the banjo bolt [A] on the rear caliper [B].
- Temporarily secure the end of the brake hose to some high place to keep fluid loss to a minimum.
- Immediately wash away any brake fluid that spills.
- Detach the rear brake hose [C] from the swingarm.

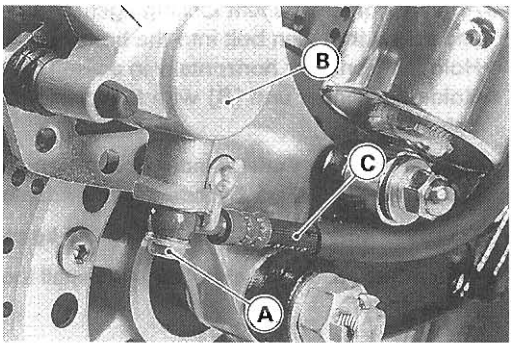

Installation

- Apply grease to the threads [A] of the swingarm pivot shaft.

Torque – Swingarm Pivot Shaft: 125 N-m (13.0 kg-m, 94 ft-lb)

- After installing the swingarm, replenish the brake fluid into the reservoir and bleed the brake line (see Bleeding the Brake Line in the Base Manual).

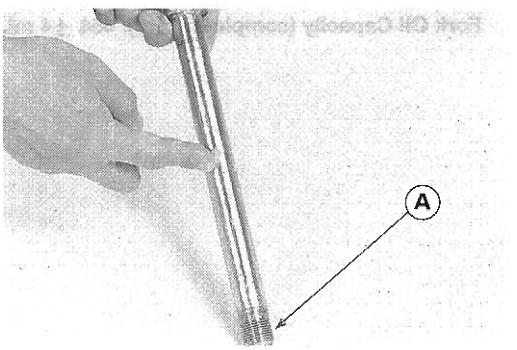

Steering

Table of Contents

Exploded View 13-2
Specifications 13-3
Handlebar 13-4
  Handlebar Installation 13-4
Steering 13-5
  Check 13-5
  Adjustment 13-5
Steering Stem 13-6
  Removal 13-6
  Installation 13-7
Steering Stem Bearing ..... *
  Bearing Lubrication ..... *
  Bearing Wear, Damage ..... *
  Stem Cap Deterioration, Damage ..... *
  Steering Stem Warp ..... *

(*): Refer to Base Manual.

Exploded View

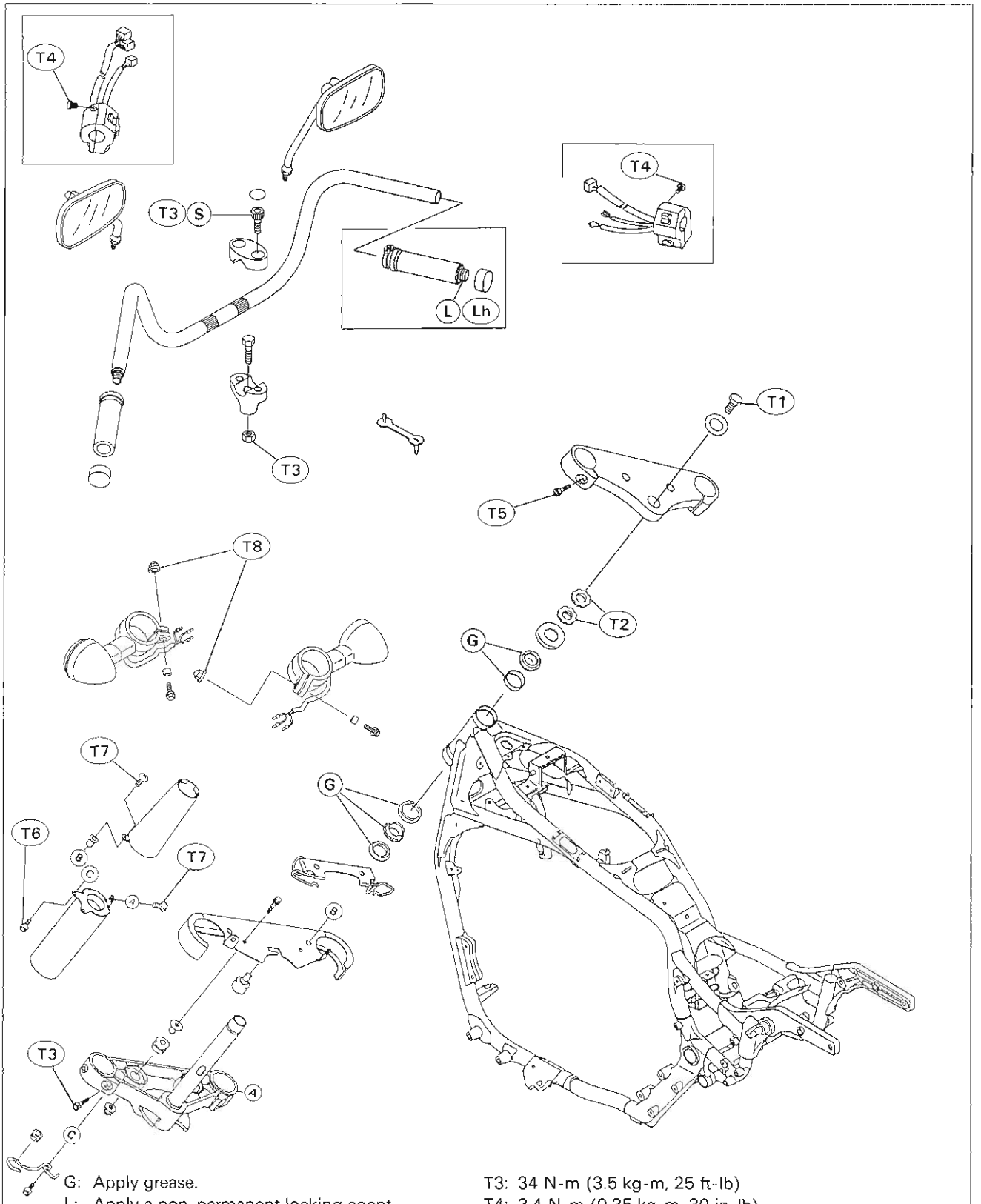

G: Apply grease.
L: Apply a non-permanent locking agent.
S: Follow the specific tightening sequence.
T1: 44 N-m (4.5 kg-m, 33 ft-lb)
T2: 4.9 N-m (0.50 kg-m, 43 in-lb) or hand-tight
T3: 34 N-m (3.5 kg-m, 25 ft-lb)
T4: 3.4 N-m (0.35 kg-m, 30 in-lb)
T5: 20 N-m (2.0 kg-m, 14.5 ft-lb)
T6: 7.4 N-m (0.75 kg-m, 65 in-lb)
T7: 4.4 N-m (0.45 kg-m, 39 in-lb)
T8: 5.9 N-m (0.60 kg-m, 52 in-lb)

Specifications

Special Tools – Jack: 57001-1238
Attachment Jack: 57001-1398
Steering Stem Nut Wrench: 57001-1100
Head Pipe Outer Race Remover: 57001-1107
Head Pipe Outer Race Press Shaft: 57001-1075
Head Pipe Outer Race Driver: 57001-1106
Head Pipe Outer Race Driver: 57001-1076
Steering Stem Bearing Driver: 57001-137
Steering Stem Bearing Driver Adapter: 57001-1074

Handlebar

Handlebar Installation

● Set the handlebar to match its punched mark [A] to the lower mating face [B] of the clamp rear part.

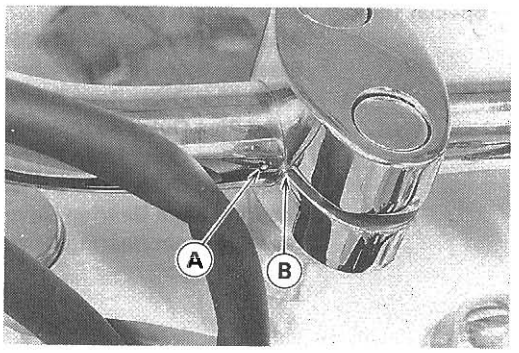

● Tighten the front clamp bolts first, and then the rear clamp bolts. There will be a gap [A] at the rear part of the clamp after tightening.

Torque – Handlebar Clamp Bolts: 34 N-m (3.5 kg-m, 25 ft-lb)

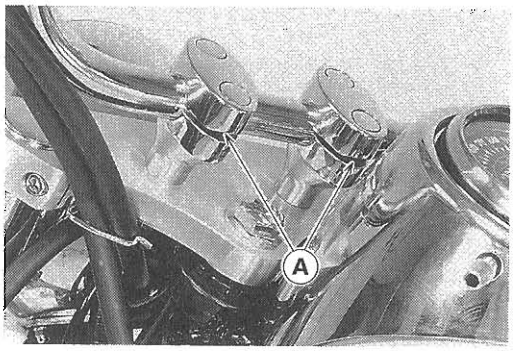

● The front half of the right and left switch housings [A] has a small projection [B]. Fit the projection into the small hole [C] in the handlebar.

● Install the handlebar switch housing.

Torque – Handlebar Switch Housing Screws: 3.4 N-m (0.35 kg-m, 30 in-lb)

● Install:
Clutch Master Cylinder (see Clutch chapter)
Front Master Cylinder (see Brakes chapter)

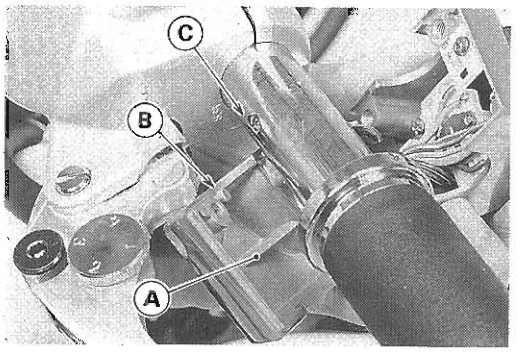

Steering

Check (Periodic Maintenance)

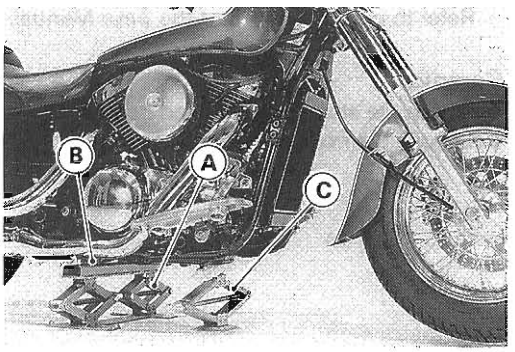

● Check steering as follows.

○ Use the jack [A], the attachment jack [B], and a suitable jack [C] to lift the front wheel off the ground.

Special Tools – Jack: 57001-1238
Attachment Jack: 57001-1398

○ With the front wheel pointing straight ahead, alternately tap each end of the handlebar. The front wheel should swing fully right and left from the force of gravity until the fork hits the stop.

★ If the wheel binds or catches before the stop, the steering is too tight.

○ Feel for steering looseness by pushing and pulling the fork.

★ If you feel looseness, the steering is too loose.

NOTE

○ *The cables and wiring will have some effect on the motion of the fork which must be taken into account. Be sure the wires and cables are properly routed.*

○ *The bearings must be in good condition and properly lubricated in order for any test to be valid.*

Adjustment

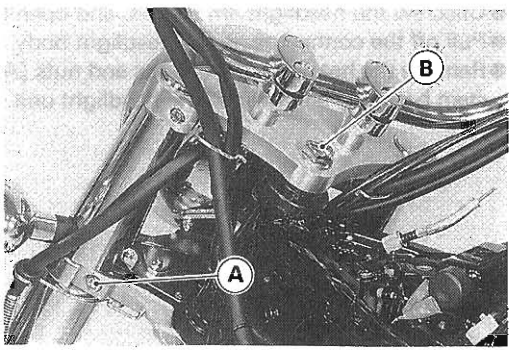

★ Adjust the steering if necessary.

● Remove:
Fuel Tank (see Fuel System chapter)

● Loosen the stem head bolt [B] and both fork lower clamp bolts [A].

● Adjust the steering with the stem nut wrench.

NOTE

○ *Do not separate the stem nut and stem locknut when adjusting.*

○ *Turn the stem nut ⅛ turn at a time maximum.*

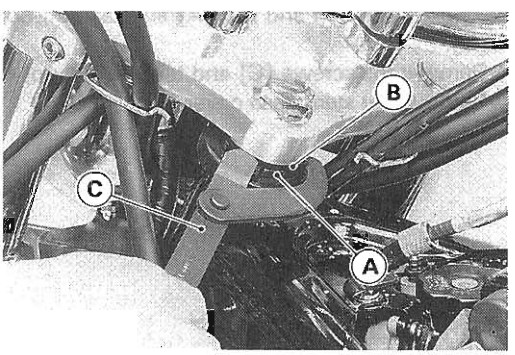

★ If the steering is too tight, loosen the stem nut (lower) [A] a fraction of a turn.

★ If the steering is too loose, tighten the stem locknut (upper) [B] a fraction of a turn.

Special Tool – Steering Stem Nut Wrench: 57001-1100 [C]

Torque – Steering Stem Nut and Locknut: 4.9 N-m (0.50 kg-m, 43 in-lb, for reference)
Steering Stem Head Bolt: 44 N-m (4.5 kg-m, 33 ft-lb)

Steering Stem

Refer to p.p 13-4, 13-5 of the Base Manual, noting the following.

Removal

- Loosen the steering stem head bolt [A].
- Remove the front fork (see Suspension chapter).

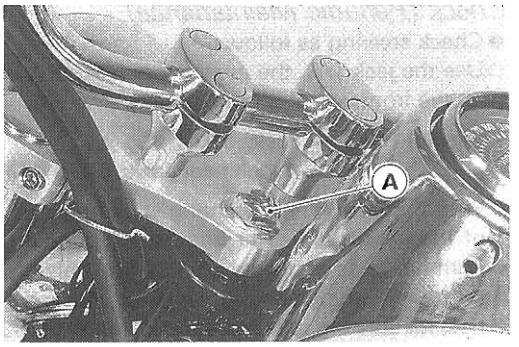

- Remove the holder [A], free the brake hose [B] from the stem base [C], and move the front brake caliper to the rear.

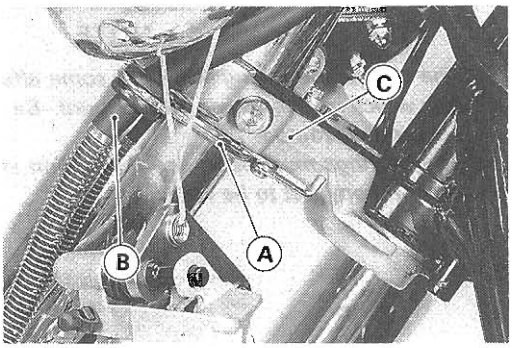

- Unscrew the headlight rim screws, and open the headlight body.
- Pull off the connectors in the headlight body.
- Remove the headlight lower bolts and nuts [A] from the bottom of the stem base [B] and remove the headlight unit.

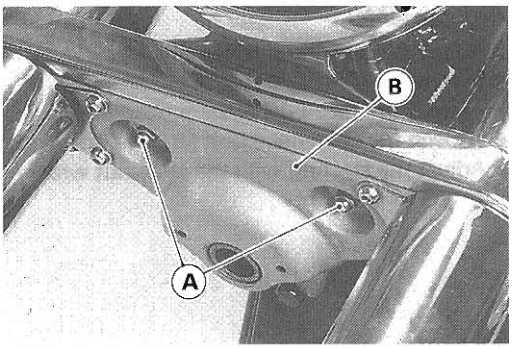

- Remove the bolt and nut [A] and take off both turn signal light units [B].
- Remove the screws [C] and take off the upper fork covers [D].
- Remove the stem base cover [E].

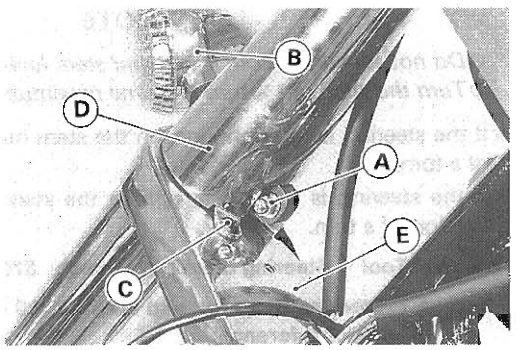

- Unscrew the bolts [A] and the screws [B], then remove both lower fork covers [C].

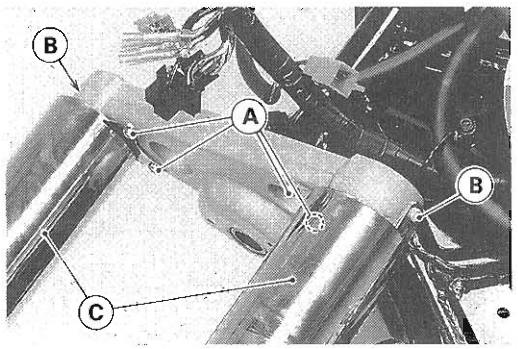

● Remove the handlebar holder nuts [A] and take off the handlebar assembly [B] from the stem head.

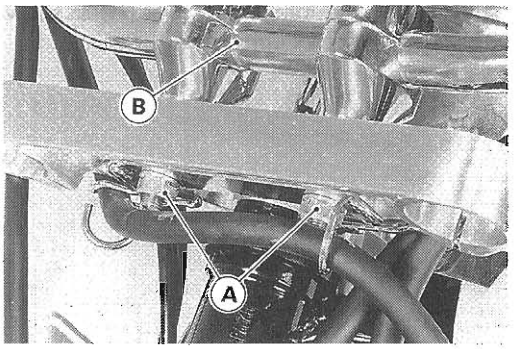

● Remove the stem head bolt [A] and flat washer.
● Lift up the steering stem head [B] and remove it.

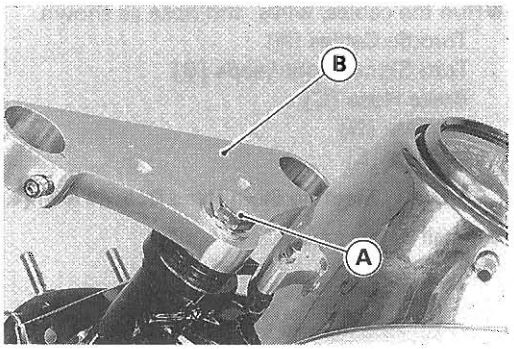

● Push up on the stem base [A], and remove the steering stem locknut [B] and steering stem nut [C] with the stem cap, using the stem nut wrench, then remove the steering stem [D] and stem base.

Special Tool – Steering Stem Nut Wrench: 57001-1100

● Remove the upper tapered roller bearing inner race.

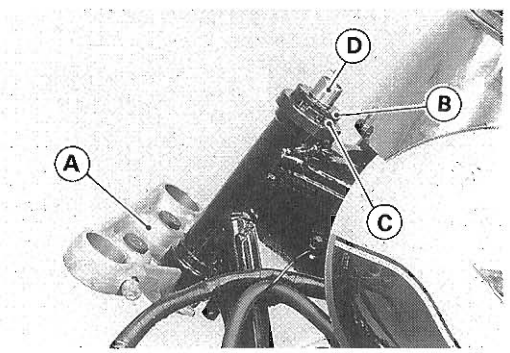

Installation

○ The left fork lower cover has an **L** mark [A] on it, and the right fork lower cover an **R** mark [B]. Be careful not to confuse it.

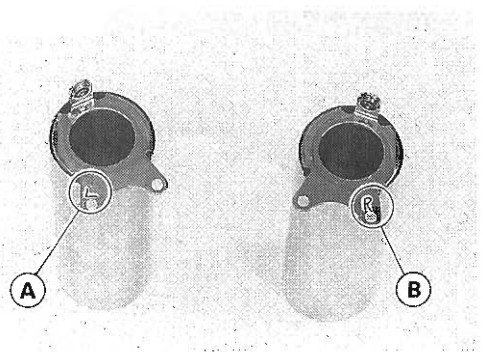

○ The left turn signal light unit has an **L** mark [A] on it, and the right turn signal light unit an **R** mark [B].

Torque – Turn Signal Light Mounting Nuts: 5.9 N-m (0.60 kg-m, 52 in-lb)

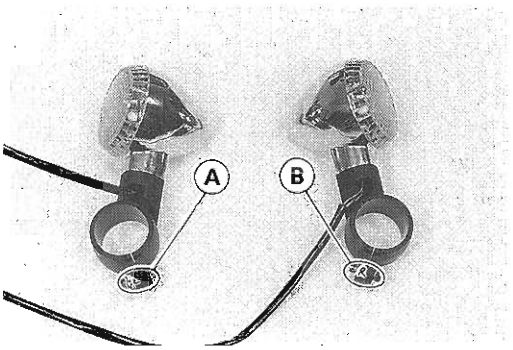

● Install the right fork upper cover [A] as shown.
● Install the left fork upper cover.

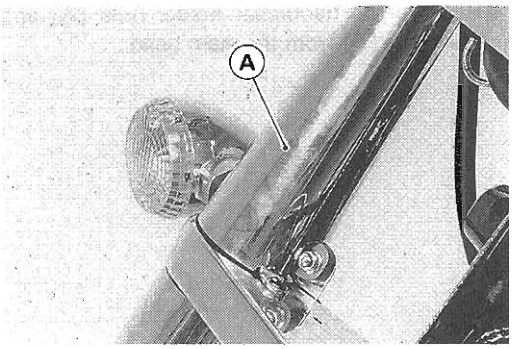

● Run the cables, wires, and hose as shown.
Throttle Cables [A]
Turn Signal Light Leads [B]
Brake Hose [C]
Harness [D]
Holders [E]

Torque – Steering Stem Head Bolt: 44 N-m (4.5 kg-m, 33 ft-lb)

● Install the front fork.

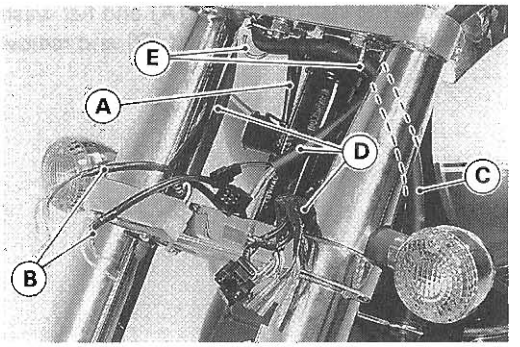

Frame

Table of Contents

Exploded View 14-2
Specifications 14-4
Seats 14-5
  Front Seat Removal 14-5
  Front Seat Installation 14-5
  Rear Seat Removal 14-5
  Rear Seat Installation 14-5
Side Covers 14-6
  Left Side Cover Removal 14-6
  Left Side Cover Installation 14-6
  Right Side Cover Removal 14-6
  Right Side Cover Installation 14-7
Fenders 14-8
  Front Fender Removal 14-8
  Rear Fender Removal 14-8
Battery Case 14-9
  Battery Case Removal 14-9
Downtube 14-10
  Removal 14-10
  Installation 14-10
Frame 14-10
  Frame Inspection 14-10

Exploded View

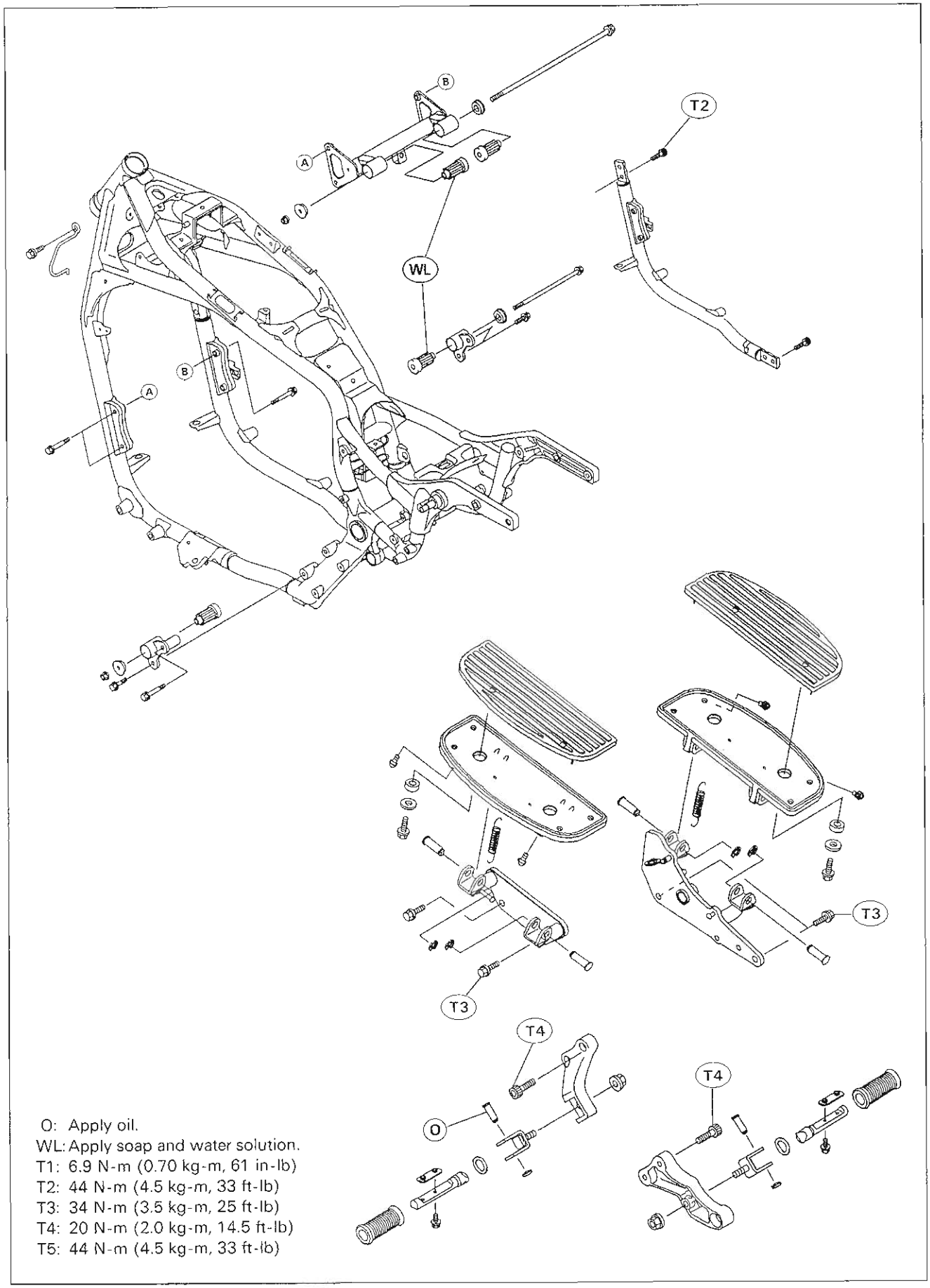

O: Apply oil.
WL: Apply soap and water solution.
T1: 6.9 N-m (0.70 kg-m, 61 in-lb)
T2: 44 N-m (4.5 kg-m, 33 ft-lb)
T3: 34 N-m (3.5 kg-m, 25 ft-lb)
T4: 20 N-m (2.0 kg-m, 14.5 ft-lb)
T5: 44 N-m (4.5 kg-m, 33 ft-lb)

1. Tool Box
2. Battery Case

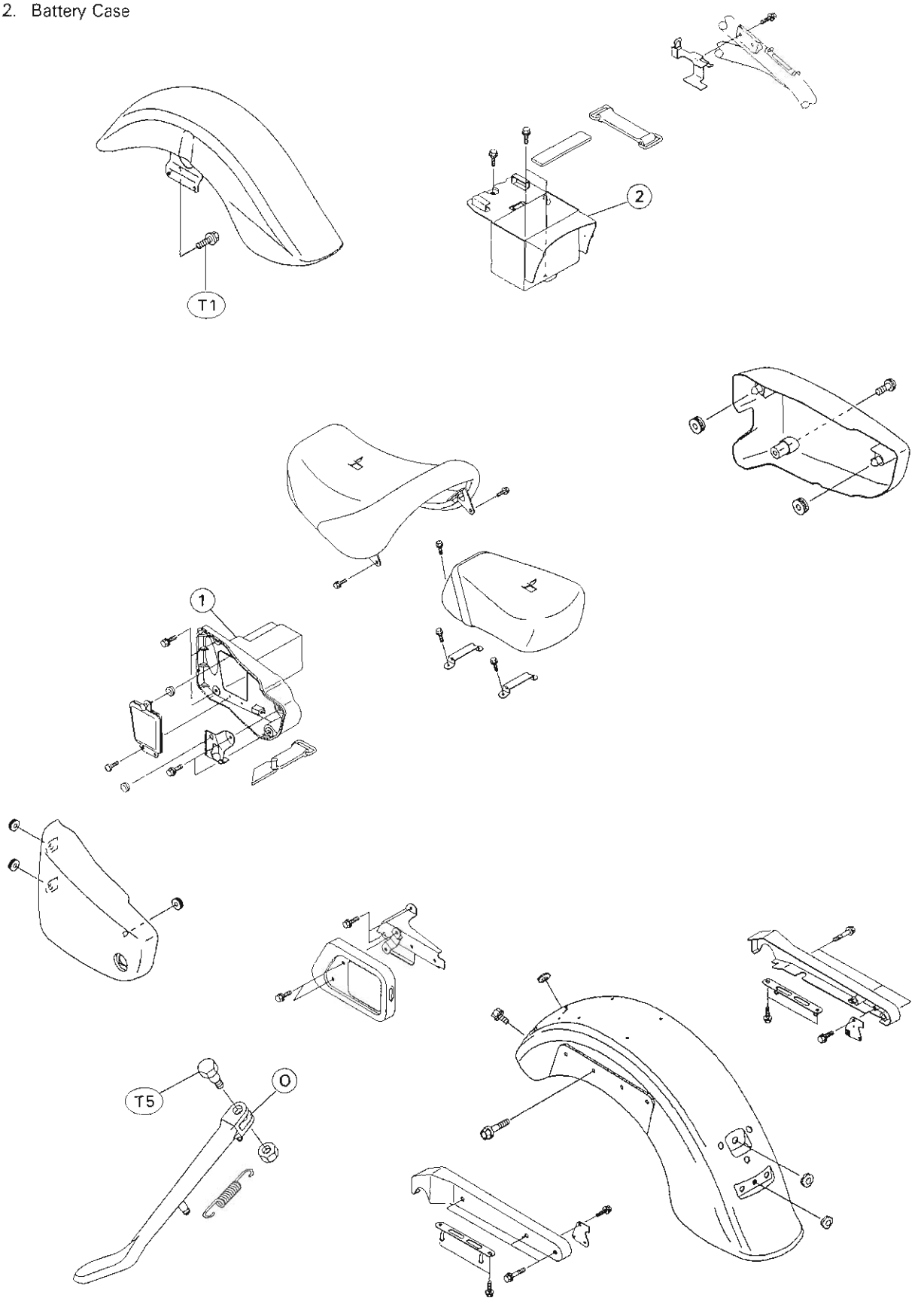

Specifications

Special Tools – Jack: 57001-1238
Attachment Jack: 57001-1398

Seats

Front Seat Removal

- Remove the seat bolts [A] on both sides.
- Pull the front seat [B] forward and remove it.

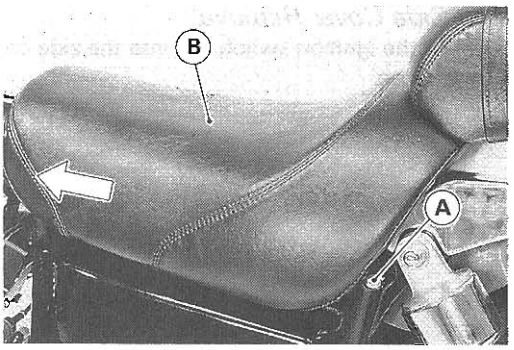

Front Seat Installation

- Insert the rear part [A] of the seat under the rear seat, then slip the seat hook [B] under the washer [C].
- Tighten the seat bolts.

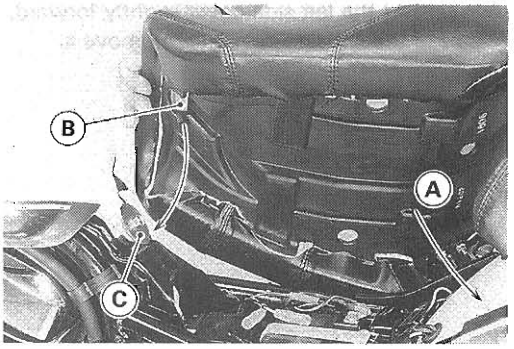

Rear Seat Removal

- Remove the front seat (see this chapter).
- Remove the seat bolt [A] and move the rear seat forward [B] and remove it.

Rear Seat Installation

- Slip the hooks [A] of the rear seat under the braces [B] on the rear fender.

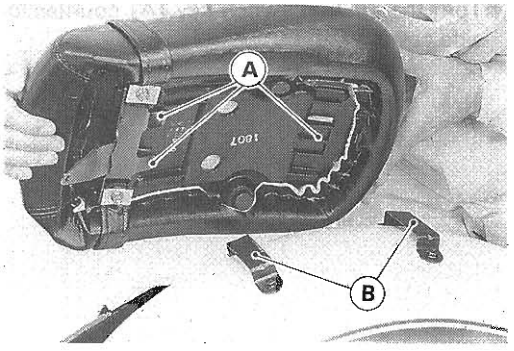

Side Covers

Left Side Cover Removal

● Insert the ignition switch key into the side cover, and turn the key [A] clockwise.

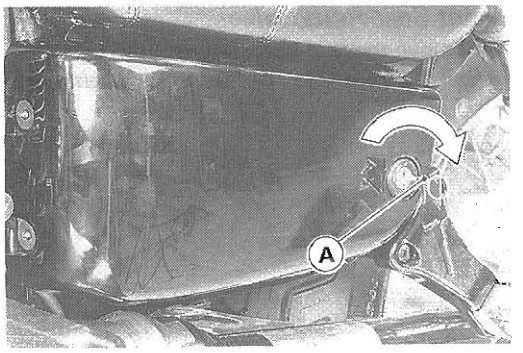

● Push [A] the left side cover slightly forward, swing open [B] the rear part of the left side cover, and remove it.

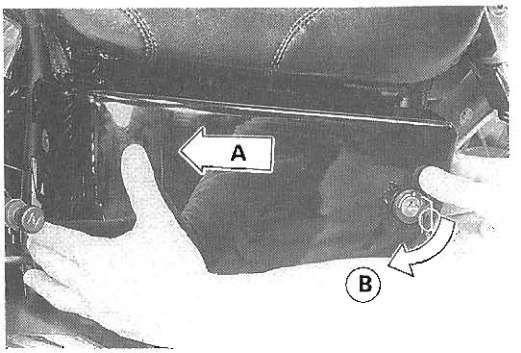

Left Side Cover Installation

● Put the front stoppers [A] into the grommets first, then put the rear stopper into the grommet.

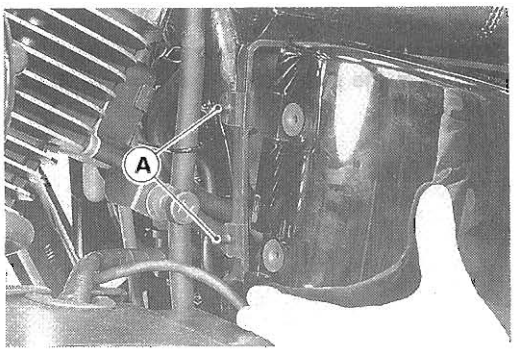

● Turn the ignition switch key [A] counterclockwise to secure the left side cover.

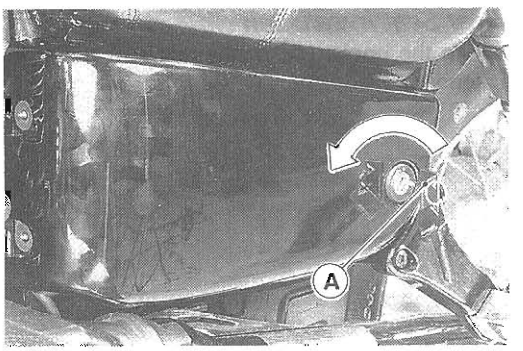

Right Side Cover Removal

● Remove the screw [A].

CAUTION
Be careful not to scratch the right side cover surface with the rear exhaust pipe [B] during removal or installation.

● Cover the right side cover with a towel and pull the cover evenly outward to clear the stoppers.
● Remove the right side cover.

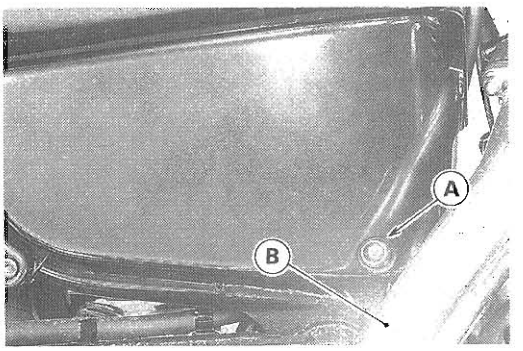

Right Side Cover Installation

● Run the reserve tank hose [A] and the reserve tank overflow hose [B] as shown.

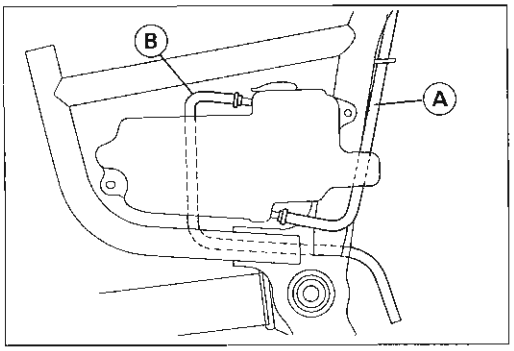

Fenders

Front Fender Removal

CAUTION
Be careful not to scratch the painted surface during removal or installation.

● Using the jack and the attachment jack, raise the rear wheel off the ground.

Special Tools – Jack: 57001-1238
Attachment Jack: 57001-1398

● Remove the mounting bolts [A] on both sides to separate the fender from the front fork.
● Move back the fender with the wheel installed and remove it.

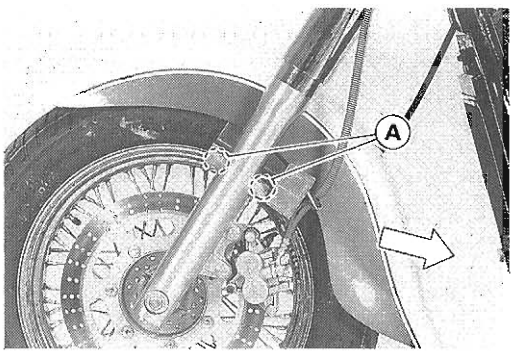

Rear Fender Removal

CAUTION
Be careful not to scratch the painted surface during removal or installation.

● Remove the rear seat (see this chapter).
● Remove:
Front Hook Bolt [A]
Rear Fender Stay Bolts [B]
Stays [C]

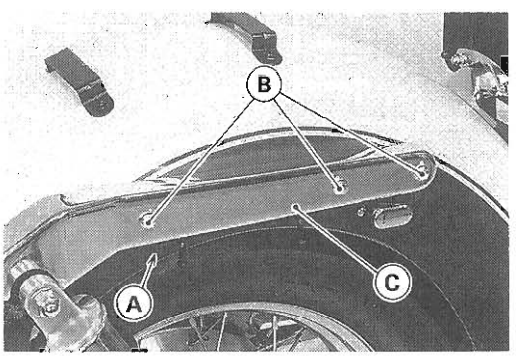

● Disconnect the rear turn signal and taillight wire connectors.
● Remove:
Rear Fender Front Bolts [A]
Rear Fender Allen Bolts [B]
● Remove the rear fender [C] rearward.

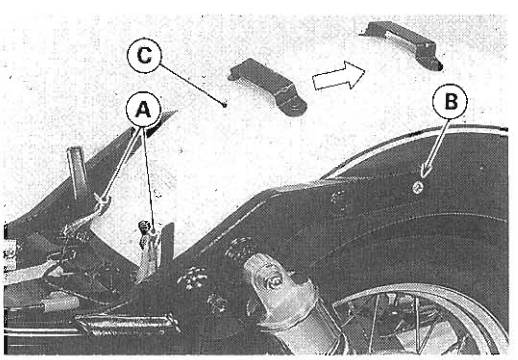

Battery Case

Battery Case Removal

- Remove:
  Front Seat (see this chapter)
  Side Covers (see this chapter)
  Battery (see Electrical System chapter)
- Remove (from the right side):

Coolant Reserve Tank [A]
IC Igniter [B]
Turn Signal Relay [C]
Starter Relay [D]

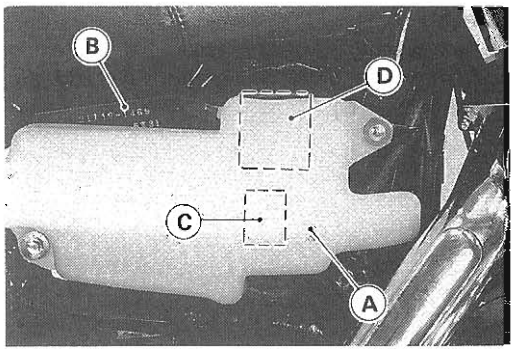

- Remove (from the left side):
  Canister (California)
- Unscrew the four bolts [A] and remove the tool box [B].

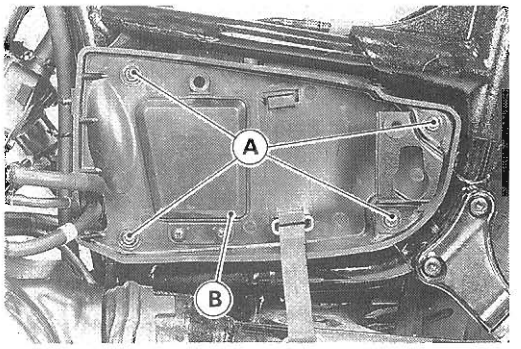

- Unscrew the three bolts [A].

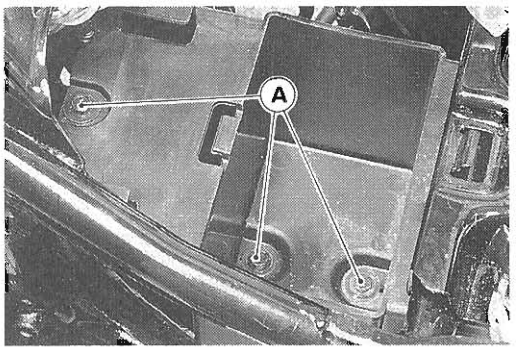

- Turn the battery case [A] clockwise and take it out from the left side.

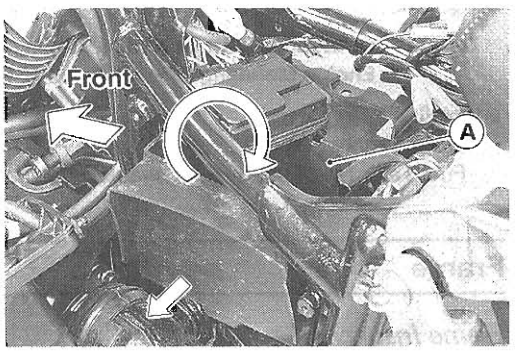

Downtube

Removal

● Remove the fuel tank (see Fuel System chapter) and pull off the radiator fan motor connector [A] and the rear brake light switch connector [B].

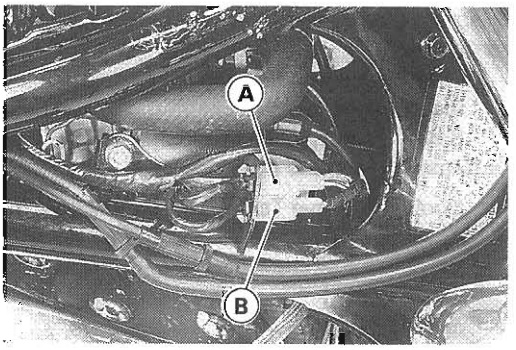

● Remove:
Front Exhaust Pipe (see Engine Top End chapter)
Engine Mounting Bracket Bolts [A]
Downtube Bolts [B]
Rear Exhaust Pipe [C]

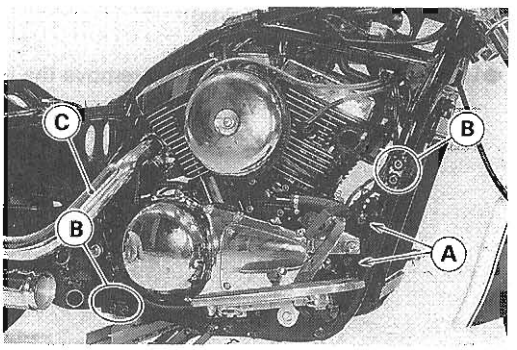

● Remove the downtube [D] with the right footpeg and rear master cylinder installed.

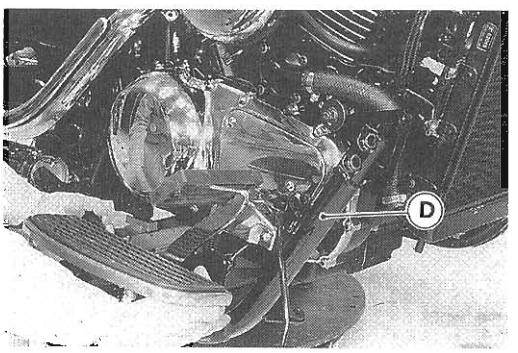

Installation

● Tighten:

Torque – Downtube Bolts: 44 N-m (4.5 kg-m, 33 ft-lb)
Engine Mounting Bracket Bolts: 23 N-m (2.3 kg-m, 16.5 ft-lb)

● Install:
Front Exhaust Pipe
Fuel Tank (see Fuel System chapter)

Frame

Frame Inspection

● Visually inspect the frame [A] for cracks, dents, bending, or warp.

★ If there is any damage to the frame, replace it.

⚠WARNING

A repaired frame may fail in use, possibly causing an accident. If the frame is bent, dented, cracked, or warped, replace it.

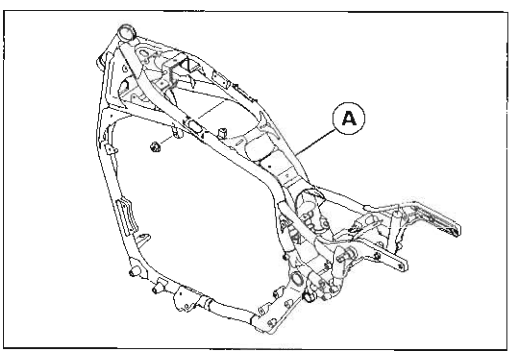

Electrical System

Table of Contents

Precautions ..... *
Parts Location 15-2
Exploded View 15-3
Specifications 15-6
VN1500-D1 Wiring Diagram (US and Canada) 15-7
VN1500-D1 Wiring Diagram (Australia) 15-8
VN1500-D1 Wiring Diagram (Other than US, Canada, and Australia) 15-9
Electrical Wiring 15-11
Battery 15-12
- Battery Removal/Installation 15-12
- Electrolyte Filling 15-12
- Initial Charge 15-14
- Precautions 15-14
- Interchange 15-14
- Charging Condition Inspection 15-15
- Refreshing Charge 15-15

Alternator 15-17
- Alternator Outer Cover Removal 15-17
- Alternator Outer Cover Installation 15-17
- Alternator Inner Cover Removal 15-17
- Alternator Rotor Removal ..... *
- Alternator Rotor Installation ..... *
- Alternator Stator Removal ..... *
- Alternator Inspection ..... *
- Rectifier Inspection ..... *
- Regulator/Rectifier Output Voltage Inspection ..... *

Ignition System 15-19
- Pickup Coil Removal 15-20
- Pickup Coil Installation 15-20
- Pickup Coil Inspection ..... *
- Ignition Timing Inspection 15-20
- Ignition Coil Removal 15-21
- Ignition Coil Installation 15-21
- Ignition Coil Inspection 15-21
- Spark Plug Gap ..... *
- IC Igniter Inspection 15-22

Starter Motor 15-24
- Removal 15-24
- Installation ..... *
- Disassembly ..... *
- Assembly ..... *
- Brush Inspection ..... *
- Commutator Cleaning and Inspection ..... *
- Armature Inspection ..... *
- Negative Brush and Lead Assembly Inspection ..... *
- Positive Brush and Lead Assembly Inspection ..... *
- Starter Relay Inspection 15-24

Headlight 15-26
- Headlight Beam Horizontal Adjustment 15-26
- Headlight Beam Vertical Adjustment 15-26
- Headlight Bulb Replacement 15-26
- Headlight Body Removal 15-27
- Tail/Brake Light Bulb Replacement 15-28
- Turn Signal Light Bulb Replacement 15-28
- Turn Signal Relay Inspection 15-29

Fuel Pump 15-31
- Removal/Installation 15-31
- Internal Resistance 15-31
- Operation Check 15-31

Radiator Fan System 15-33
- Fan System Circuit Inspection 15-33
- Fan Motor Inspection 15-33

Meter, Gauge 15-34
- Meter Unit Removal 15-34
- Meter Unit Installation 15-34
- Meter Unit Disassembly 15-34
- Bulb Replacement 15-34
- Water Temperature Warning System Inspection 15-35
- Fuel Gauge Operation Inspection 15-36
- Fuel Gauge Sensor Inspection ..... *

Switches and Sensors 15-37
- Front Brake Light Switch Inspection 15-37
- Rear Brake Light Switch Adjustment 15-37
- Fan Switch Inspection ..... *

Junction Box 15-38
- Junction Box Fuse Circuit Inspection 15-38
- Starter Circuit/Headlight Relay Inspection 15-38
- Diode Circuit Inspection 15-39

Fuse 15-41
- Main Fuse Removal 15-41
- Junction Box Fuse Removal 15-41
- Fuse Installation 15-41
- Fuse Inspection 15-41

Parts Location

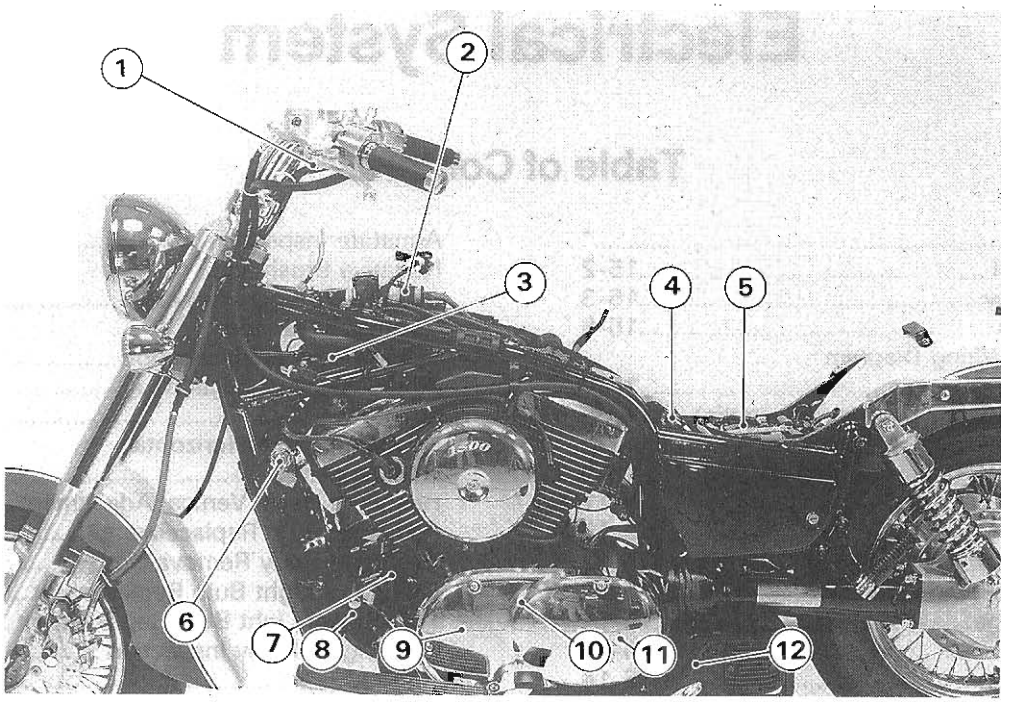

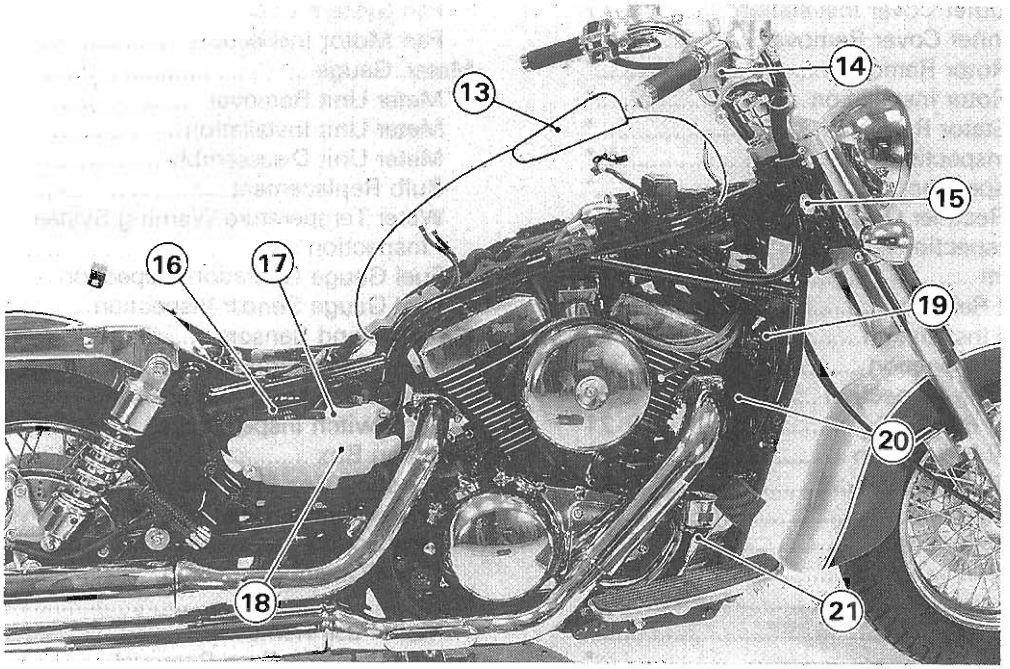

1. Starter Lockout Switch
2. Fuel Pump
3. Ignition Coils
4. Junction Box
5. MF Battery
6. Ignition Switch
7. Starter Motor
8. Water Temperature Switch
9. Alternator
10. Pickup Coils
11. Neutral Switch
12. Oil Pressure Switch
13. Meter Unit
14. Front Brake Light Switch
15. Steering Lock
16. IC Igniter
17. Starter Relay and Main Fuse
18. Turn Signal Relay
19. Horns
20. Radiator Fan
21. Radiator Fan Switch

Exploded View

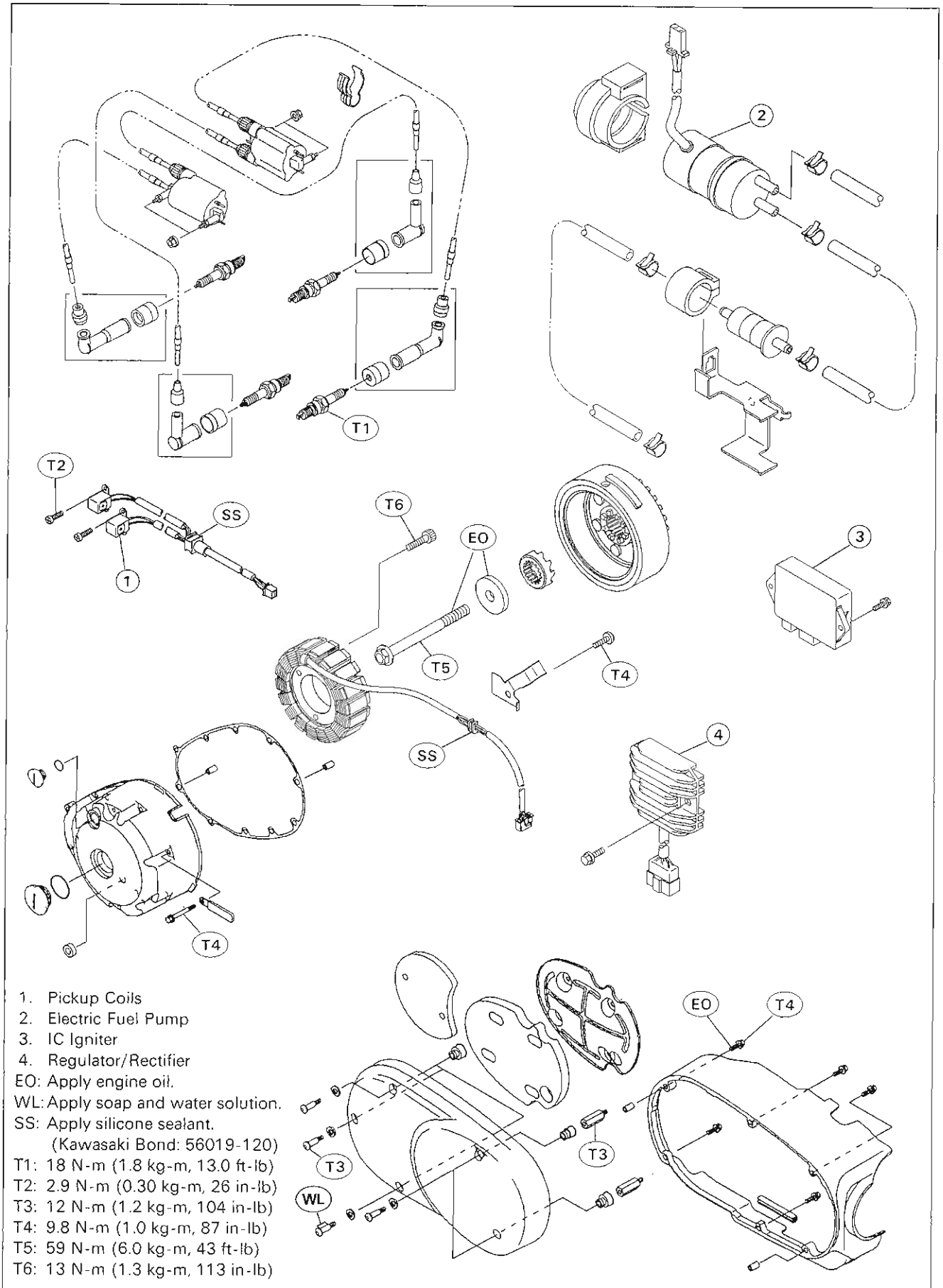

1. Pickup Coils
2. Electric Fuel Pump
3. IC Igniter
4. Regulator/Rectifier

EO: Apply engine oil.
WL: Apply soap and water solution.
SS: Apply silicone sealant.
(Kawasaki Bond: 56019-120)
T1: 18 N-m (1.8 kg-m, 13.0 ft-lb)
T2: 2.9 N-m (0.30 kg-m, 26 in-lb)
T3: 12 N-m (1.2 kg-m, 104 in-lb)
T4: 9.8 N-m (1.0 kg-m, 87 in-lb)
T5: 59 N-m (6.0 kg-m, 43 ft-lb)
T6: 13 N-m (1.3 kg-m, 113 in-lb)

1. Starter Lockout Switch
2. Rear Brake Light Switch
3. Front Brake Light Switch
4. Sidestand Switch
5. Starter Relay
6. Fuel Level Sensor

L: Apply a non-permanent locking agent.
T1: 11 N-m (1.1 kg-m, 95 in-lb)
T2: 4.9 N-m (0.50 kg-m, 43 in-lb)
T3: 9.8 N-m (1.0 kg-m, 87 in-lb)
T4: 2.9 N-m (0.30 kg-m, 26 in-lb)
T5: 1.0 N-m (0.10 kg-m, 9 in-lb)
T6: 3.4 N-m (0.35 kg-m, 30 in-lb)
T7: 8.8 N-m (0.90 kg-m, 78 in-lb)
T8: 1.2 N-m (0.12 kg-m, 10 in-lb)

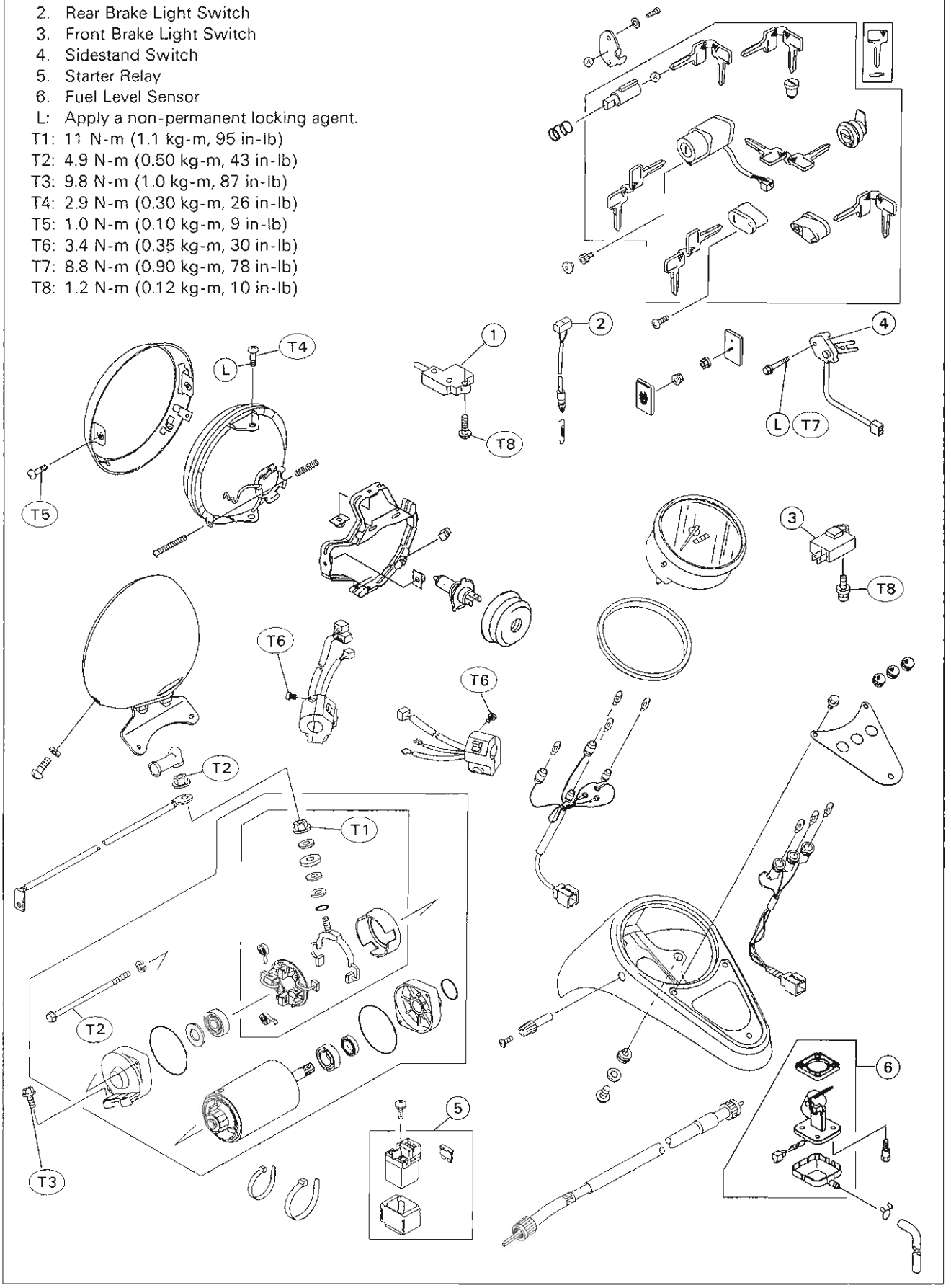

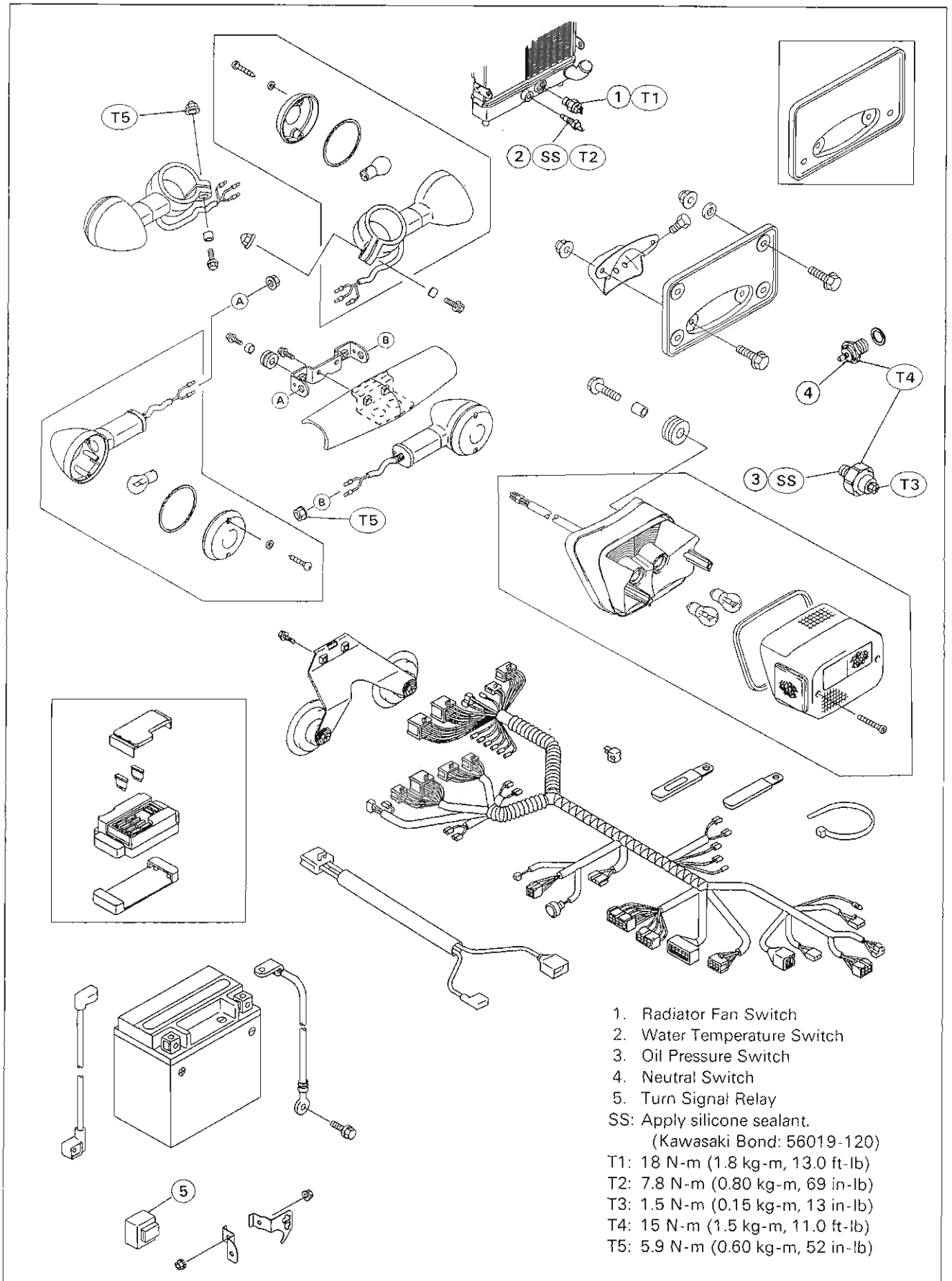

1. Radiator Fan Switch
2. Water Temperature Switch
3. Oil Pressure Switch
4. Neutral Switch
5. Turn Signal Relay

SS: Apply silicone sealant.
(Kawasaki Bond: 56019-120)

T1: 18 N-m (1.8 kg-m, 13.0 ft-lb)
T2: 7.8 N-m (0.80 kg-m, 69 in-lb)
T3: 1.5 N-m (0.15 kg-m, 13 in-lb)
T4: 15 N-m (1.5 kg-m, 11.0 ft-lb)
T5: 5.9 N-m (0.60 kg-m, 52 in-lb)

Specifications

Item	Standard
Battery:	
Type	MF (Maintenance Free) Battery
Capacity	12 V 14 Ah
Voltage	12.8 V or more
Charging System:	
Alternator type	Three-phase AC
DC battery charging voltage	14 ~ 15 V @3 000 r/min (rpm)
Alternator output voltage (no load)	45 ~ 65 V @3 000 r/min (rpm)
Stator coil (battery charging coil) resistance	0.34 ~ 0.50 Ω (x 1Ω)
Regulator/rectifier Type	Load dumping regulator with full-wave rectifier
Resistance	in the text (see Base Manual)
Ignition System:	
Pickup coil air gap	1.0 mm (Non-measurable and non-adjustable)
Pickup coil resistance	380 ~ 560 Ω (x 100 Ω)
Ignition coil:	
3 needle arcing distance	6 mm or more
Primary winding resistance	1.9 ~ 2.9 Ω (x 1 Ω)
Secondary winding resistance	18 ~ 28 kΩ (x 1 kΩ)
Spark plug:	
Spark plug gap	0.8 ~ 0.9 mm
Spark plug cap resistance	3.75 ~ 6.25 kΩ (x 1 kΩ)
IC igniter resistance	in the text
Electric Starter System:	
Starter motor:	
Brush length	12 mm (Service limit 8.5 mm)
Commutator diameter	28 mm (Service limit 27 mm)
Fuel Pump:	
Fuel pump pressure	14 ~ 19 kPa (0.14 ~ 0.19 kg/cm², 2.0 ~ 2.7 psi)
Switch and Sensor:	
Rear brake light switch timing	ON after about 15 mm pedal travel
Engine oil pressure switch connections	When engine is stopped: ON
	When engine is running: OFF
Radiator Fan Switch Connections	
Rising temperature	From OFF to ON @100 ~ 110°C (212 ~ 230°F)
Falling temperature	From ON to OFF @97 ~ 103°C (203 ~ 217°F)
	ON: Less than 0.5 Ω
	OFF: More than 1 MΩ
Water temperature switch resistance	ON: 110 ~ 120°C (230° ~ 248°F)
	OFF: 108°C (226°F) ~temperature less than ON temperature
Fuel level sensor resistance	FULL position: 4 ~ 10 Ω
	EMPTY position: 90 ~ 100 Ω

Special Tools – **Hand Tester: 57001-1394**
Spark Plug Wrench, Hex 18: 57001-1024
Timing Light: 57001-1241
Igniter Checker: 57001-1378
Flywheel Holder: 57001-1313
Harness Adapter #12: 57001-1397

Sealant – **Kawasaki Bond (Silicone Sealant): 56019-120**

VN1500-D1 Wiring Diagram (US and Canada)

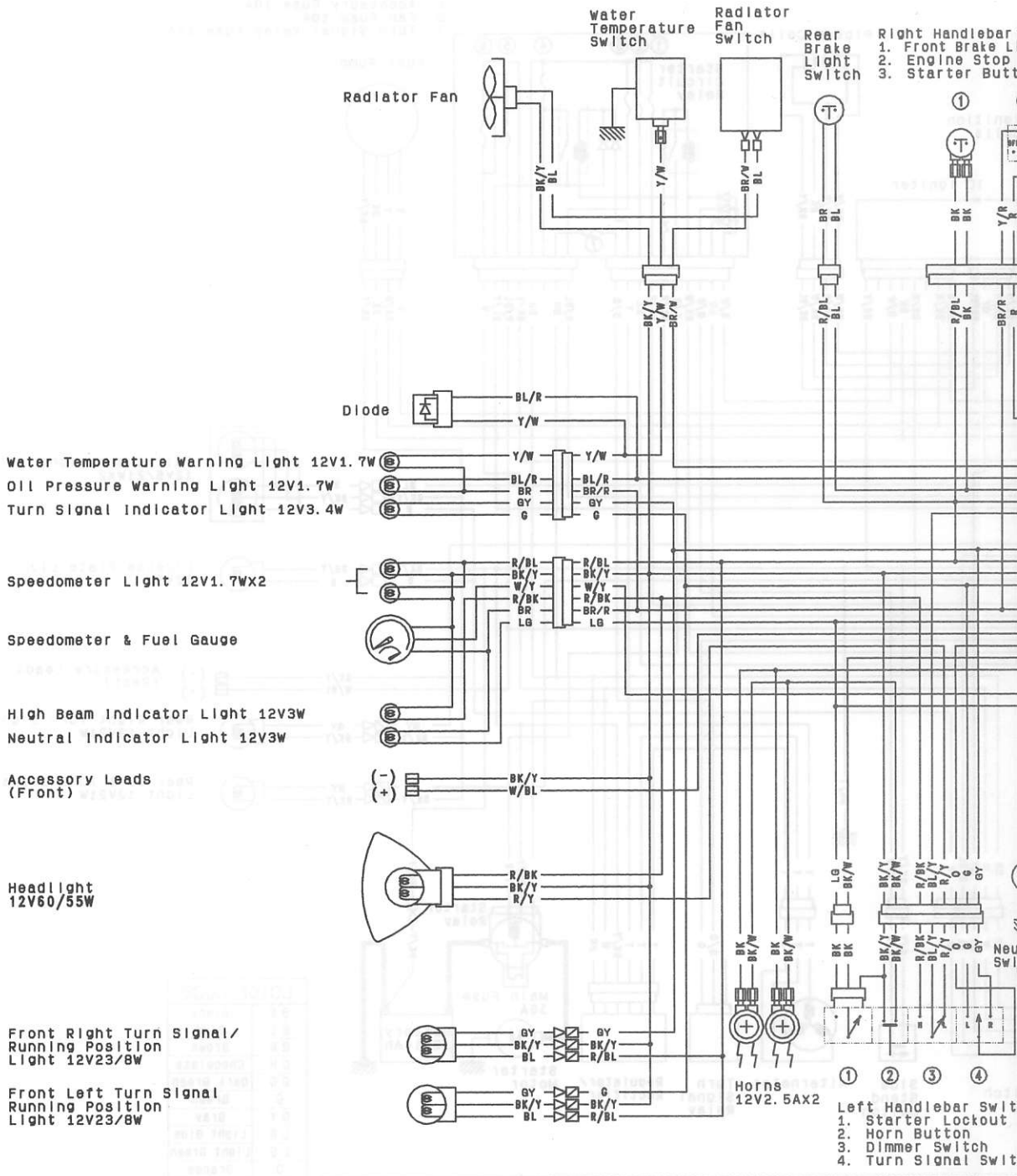

LEFT HANDLEBAR SWITCH CONNECTIONS													
Starter Lockout Switch				Horn Button			Dimmer Switch						T
Color	BK	BK	BK/Y	Color	BK/W	BK/Y	Color	R/Y	BL/Y	R/BK	C		
Clutch Lever							HI						
Released				Push									
Pulled In							LO						

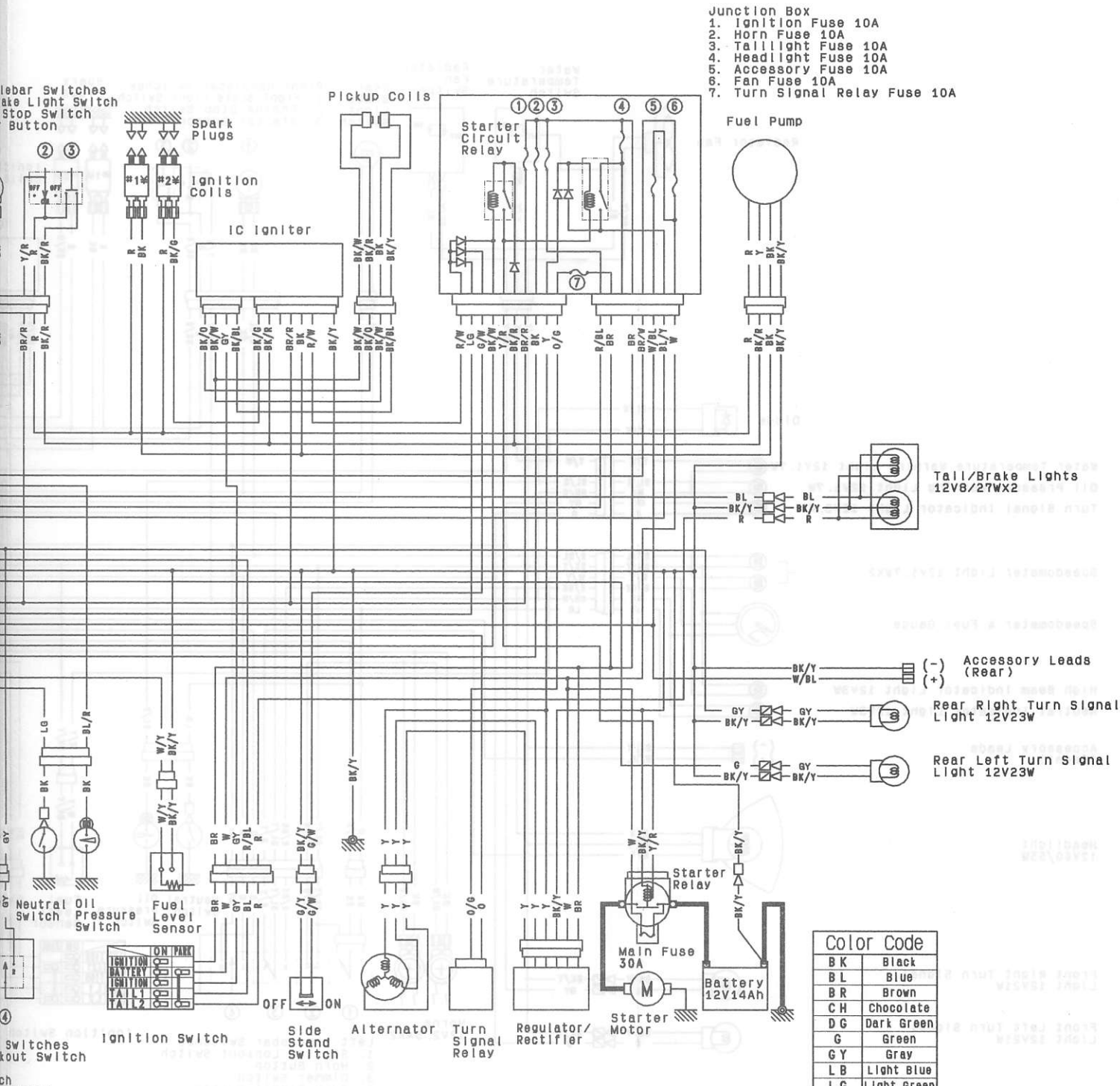

Color Code	
BK	Black
BL	Blue
BR	Brown
CH	Chocolate
DG	Dark Green
G	Green
GY	Gray
LB	Light Blue
LG	Light Green
O	Orange
P	Pink
PU	Purple
R	Red
W	White
Y	Yellow

IONS				
h	Turn Signal Switch			
R/BK	Color	G	O	GY
	L			
	OFF(Push)			
	R			

IGNITION SWITCH CONNECTIONS					
	Ignition	Battery	Ignition	Tail1	Tail2
Color	BR	W	GY	BL	R
OFF					
ON					
P(PARK)					

RIGHT HANDLEBAR SWITCH CONNECTIONS								
Front Brake Light Switch			Engine Stop Switch			Starter Button		
Color	BK	BK	Color	Y/R	R	Color	R	BK/R
Brake Lever			OFF			Released		
Pulled In			RUN			Push		

(98051-1605C)C

VN1500-D1 Wiring Diagram (Australia)

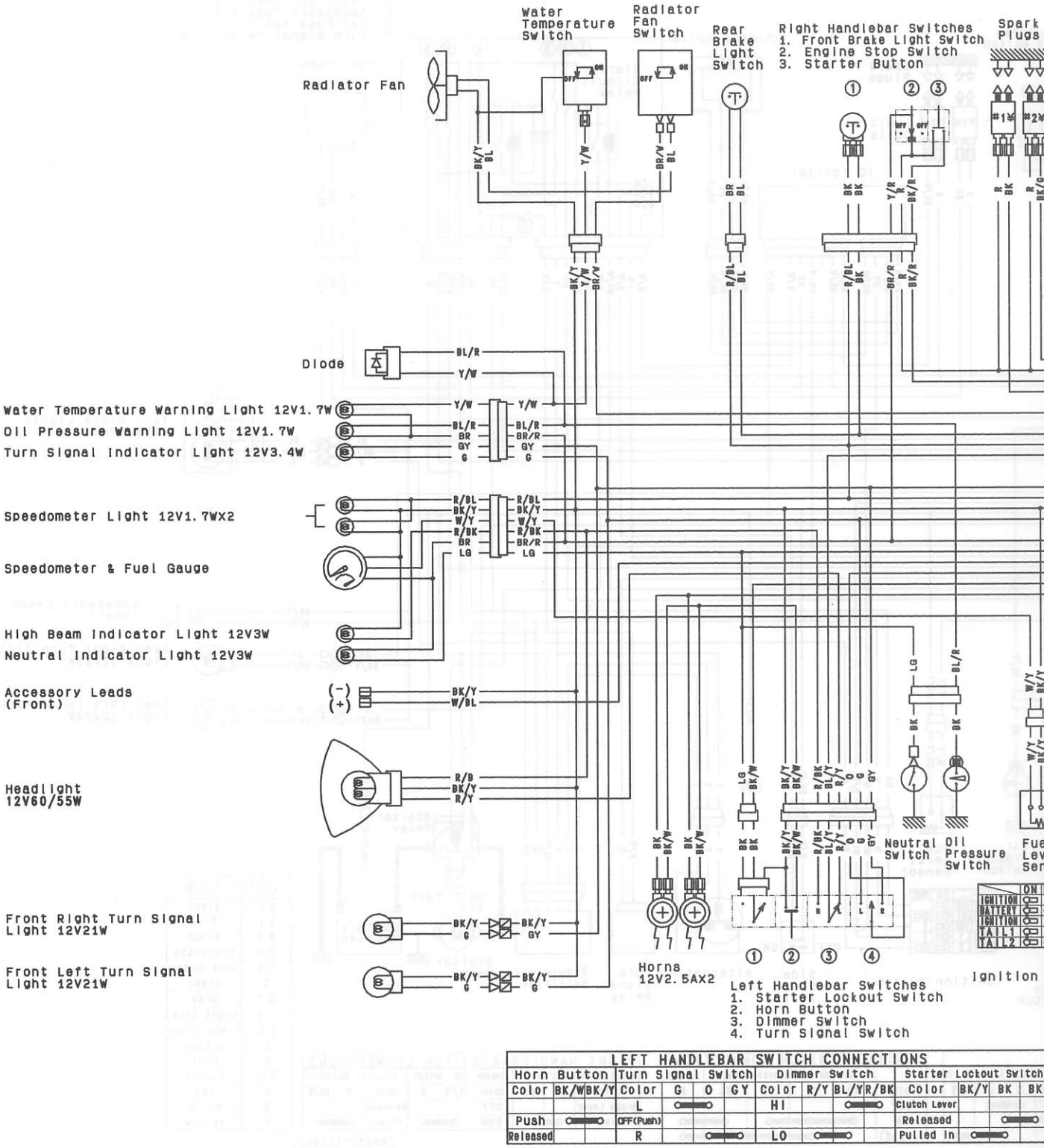

LEFT HANDLEBAR SWITCH CONNECTIONS

Horn Button			Turn Signal Switch				Dimmer Switch					Starter Lockout Switch			
Color	BK/W	BK/Y	Color	G	O	GY	Color	R/Y	BL/Y	R/BK		Color	BK/Y	BK	BK
			L	○			HI		○			Clutch Lever			
Push	○		OFF(Push)									Released		○	
Released			R		○		LO	○				Pulled In	○		

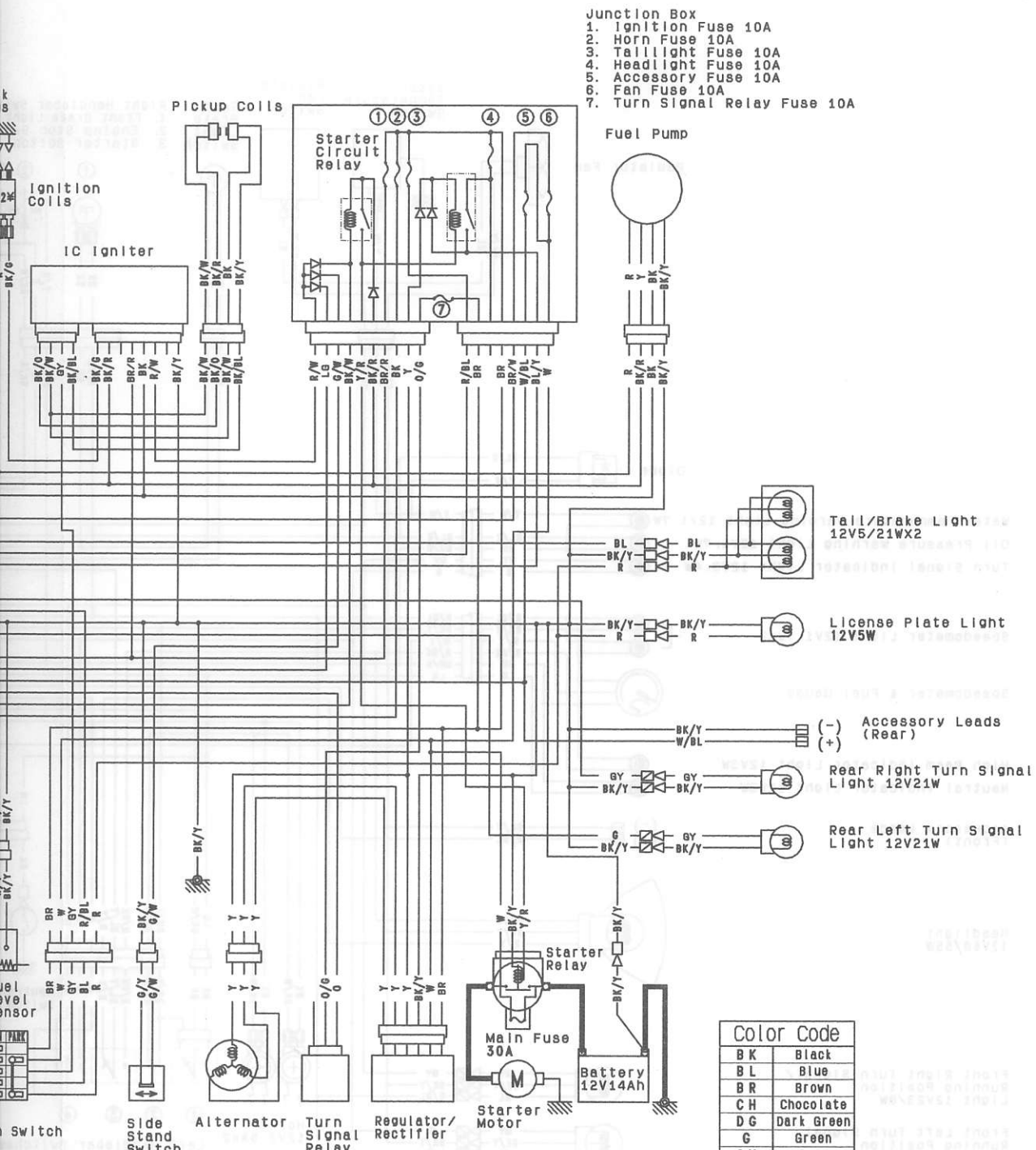

Color Code	
BK	Black
BL	Blue
BR	Brown
CH	Chocolate
DG	Dark Green
G	Green
GY	Gray
LB	Light Blue
LG	Light Green
O	Orange
P	Pink
PU	Purple
R	Red
W	White
Y	Yellow

IGNITION SWITCH CONNECTIONS

	Ignition	Battery	Ignition	Tail1	Tail2
Color	BR	W	GY	BL	R
OFF					
ON	○	○	○	○	
P(PARK)		○	○	○	○

RIGHT HANDLEBAR SWITCH CONNECTIONS

Front Brake Light Switch			Engine Stop Switch			Starter Button		
Color	BK	BK	Color	Y/R	R	Color	R	BK/R
Brake Lever			OFF			Released		
Pulled In	○	○	RUN	○	○	Push	○	○

(98051-1616A)C

VN1500-D1 Wiring Diagram (Other than US, Canada, and Australia)

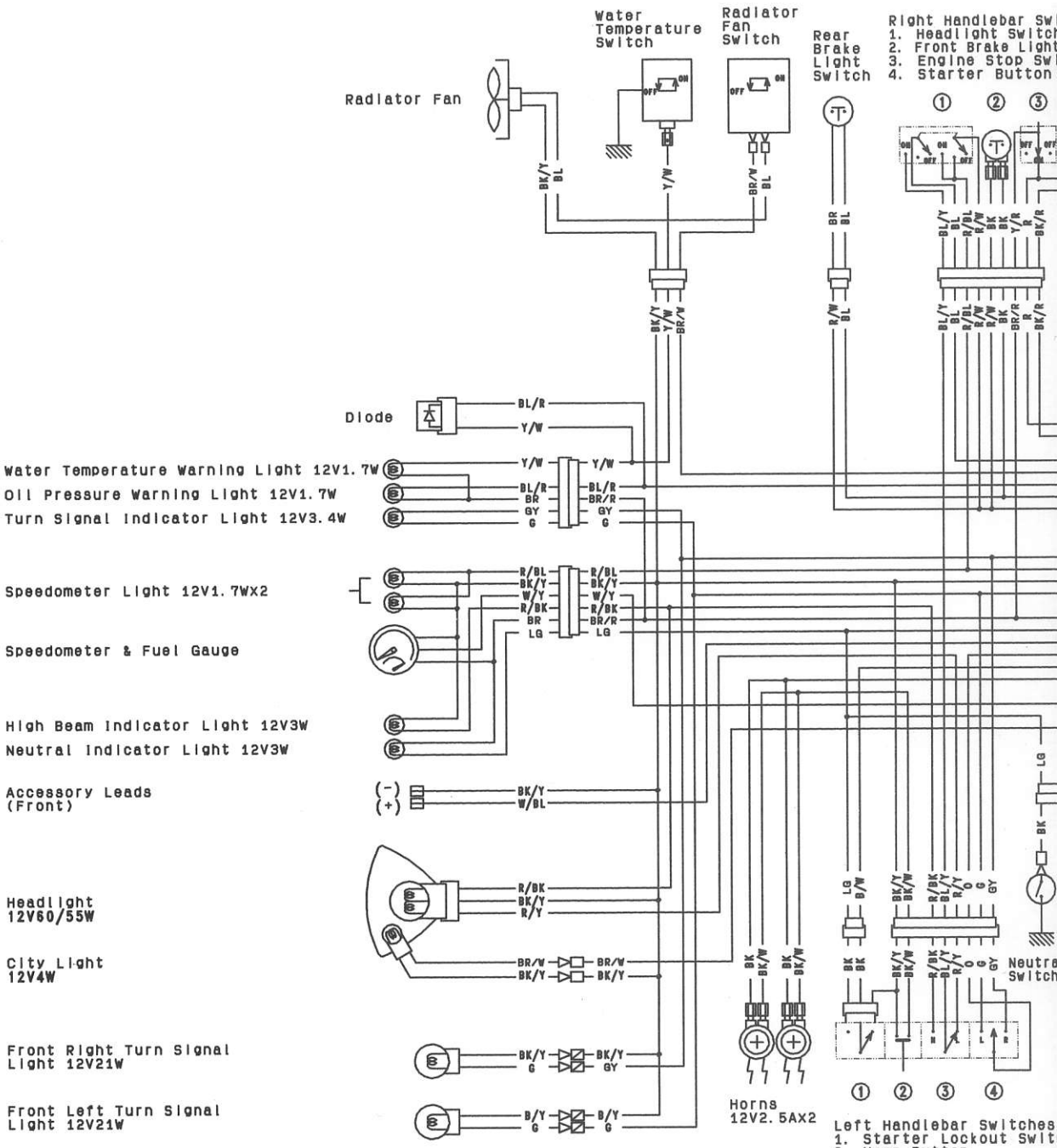

LEFT HANDLEBAR SWITCH CONNECTIONS

Horn Button			Turn Signal Switch				Dimmer Switch				Starter Lockout Switch			
Color	BK/W	BK/Y	Color	G	O	GY	Color	R/Y	BL/Y	R/BK	Color	BK/Y	BK	BK
Push	○	○	R		○		LO	○			Clutch Lever			
Released			OFF(Push)								Released		○	
			L	○			HI		○		Pulled In	○		

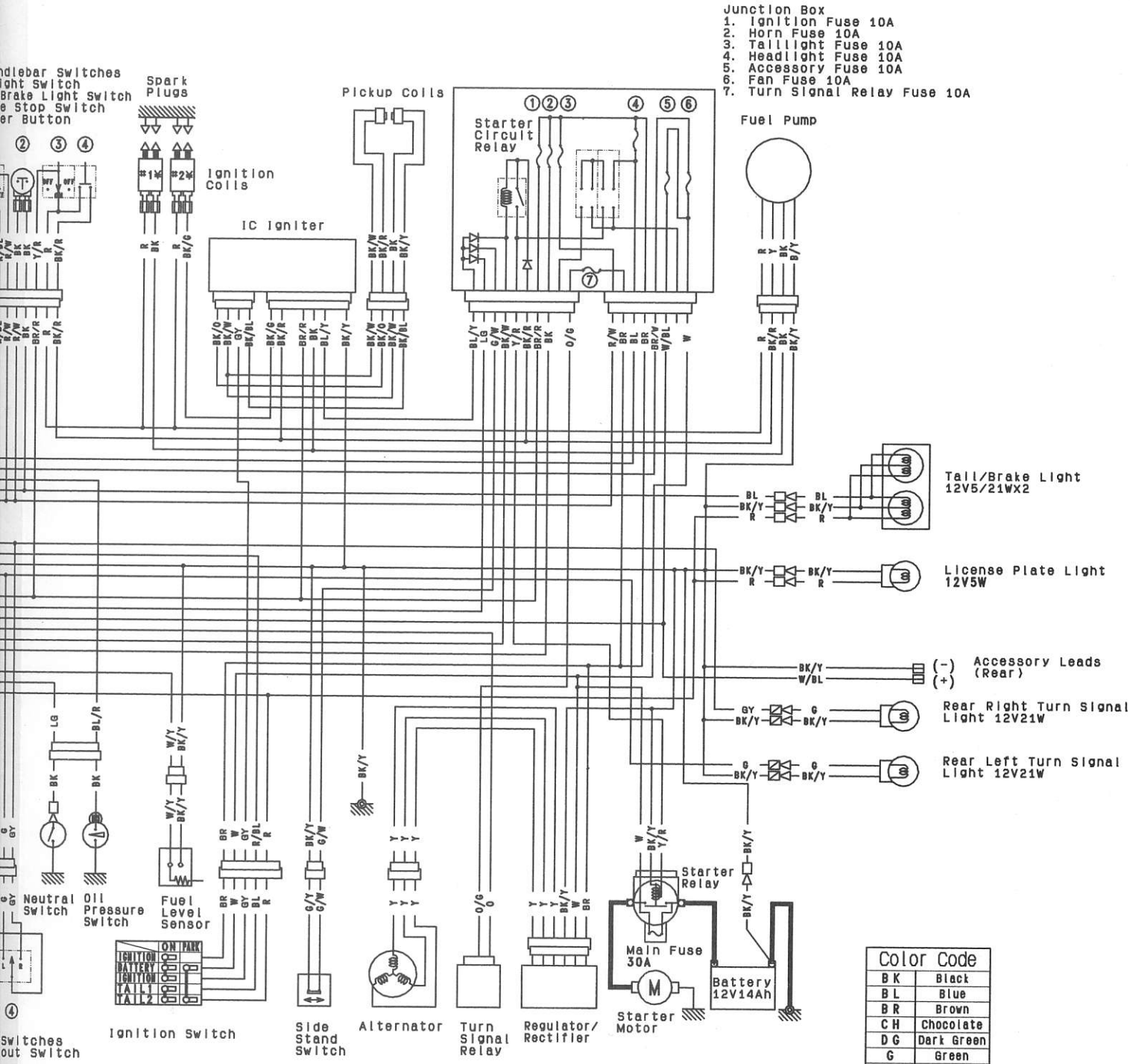

IGNITION SWITCH CONNECTIONS					
	Ignition	Battery	Ignition	Tail1	Tail2
Color	BR	W	GY	BL	R
ON					
P(PARK)					

RIGHT HANDLEBAR SWITCH CONNECTIONS														
Headlight Switch					Front Brake Light Switch			Engine Stop Switch			Starter Button		
Color	R/BL	R/W	BL/Y	BL	Color	BK	BK	Color	R	Y/R	Color	R	BK/R
●					Brake Lever			OFF			Push	●	
PARK	●	●			Pulled In	●					Released		
Hi light	●	●	●	●	Released			RUN	●				

Color Code	
BK	Black
BL	Blue
BR	Brown
CH	Chocolate
DG	Dark Green
G	Green
GY	Gray
LB	Light Blue
LG	Light Green
O	Orange
P	Pink
PU	Purple
R	Red
W	White
Y	Yellow

(98051-1606C)C

Electrical Wiring

Wiring Inspection

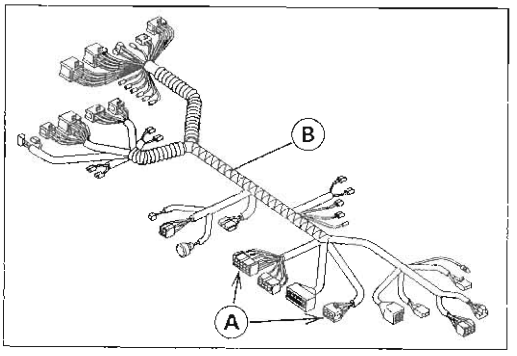

- ● Visually inspect the wiring for signs of burning, fraying, etc.
- ★ If any wiring is poor, replace the damaged wiring.
- ● Pull each connector [A] apart and inspect it for corrosion, dirt, and damage.
- ★ If the connector is corroded or dirty, clean it carefully. If it is damaged, replace it.
- ● Check that the connectors are not loose.
- ● Check the wiring for continuity.
- ○ Use the wiring diagram to find the ends of the lead which is suspected of being a problem.
- ○ Connect the hand tester between the ends of the leads.

Special Tool – Hand Tester: 57001-1394

- ○ Set the tester to the x 1 Ω range, and read the tester.
- ★ If the tester does not read 0 Ω, the lead is defective. Replace the lead or the wiring harness [B] if necessary.

Battery

Battery Removal/Installation

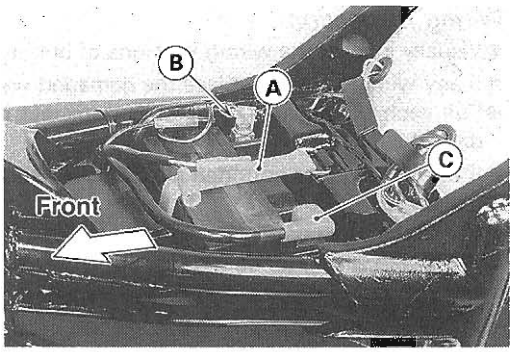

- Remove:
  Front Seat (see Frame chapter)
  Battery Band [A]
- Remove the negative (−) lead [B] from the battery first.
- Remove the positive (+) lead [C] from the battery and pull out the battery.

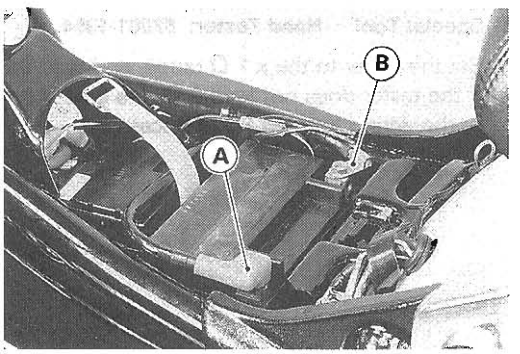

- When installing, connect the positive (+) lead first [A], then the negative (−) lead [B] to the battery.

Electrolyte Filling

CAUTION

Do not remove the seal sheet sealing the filler ports until just before use.
Be sure to use the dedicated electrolyte container for correct electrolyte volume.

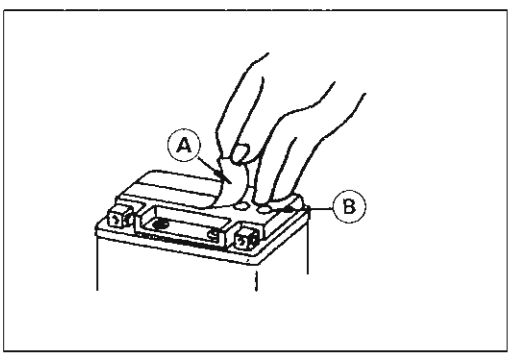

- Check to see that there is no peeling, tears or holes in the seal sheet on the top of the battery.
- Place the battery on a level surface.
- Remove the seal sheet [A].

NOTE

○*A battery whose seal sheet has any peeling, tears, or holes, requires a refreshing charge (initial charge).*

- Take the electrolyte container out of the vinyl bag.
- Detach the seal cap [A] from the container.

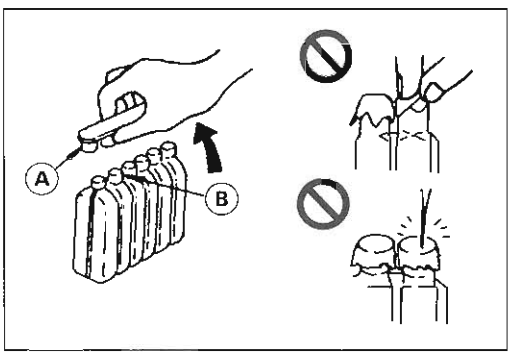

NOTE

○*Do not discard the seal cap because it is used as the battery plugs later.*
○*Do not peel back or pierce the seals [B] on the container.*

● Place the electrolyte container upside down aligning the six seals with the six battery filler ports.
● Push the container down strongly enough to break the seals. Now the electrolyte should start to flow into the battery.

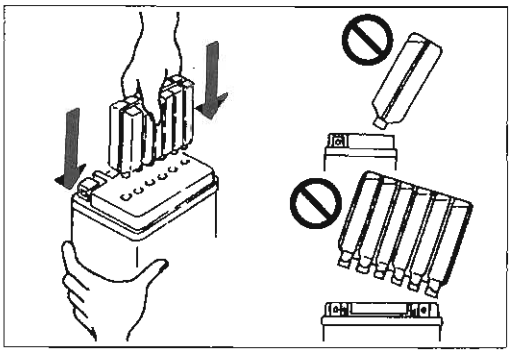

NOTE

○ *Do not tilt the container as the electrolyte flow may be interrupted.*

● Make sure air bubbles [A] are coming up from all six filler ports.
○ Leave the container this way for 5 minutes or longer.

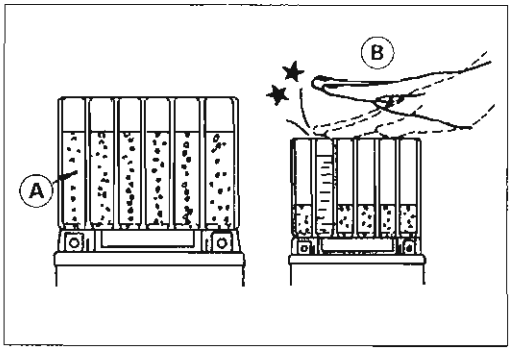

NOTE

○ *If no air bubbles are coming up from a filler port, tap [B] the bottom of the container two or three times. Never remove the container from the battery.*

CAUTION

Fill the electrolyte into the battery until the container is completely emptied.

● Be certain that all the electrolyte has flowed out.
● Tap the bottom the same way as above if there is any electrolyte left in the container.
● Now pull the container gently out of the battery.
● Let the battery sit for **20** minutes. During this time, the electrolyte permeates the special separators and the gas generated by chemical reaction is released.
● Fit the seal cap [A] tightly into the filler ports until the seal cap is at the same level as the top of the battery.

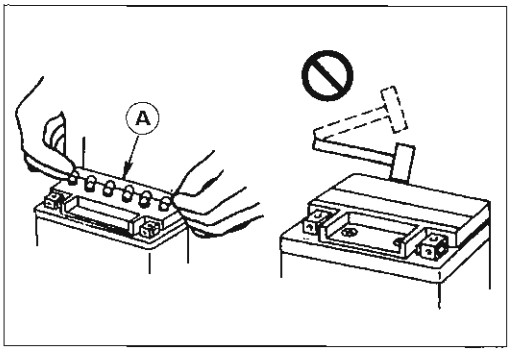

NOTE

○ *Do not hammer. Press down evenly with both hands.*

⚠WARNING

Once you installed the seal cap after filling the battery, never remove it, nor add any water or electrolyte.

Initial Charge

While a maintenance free battery can be used after only filling with electrolyte, a battery may not be able to sufficiently move a starter motor to start an engine in the cases shown in the table below, where an initial charge is required before use. However, if a battery shows a terminal voltage of higher than 12.8 V after 10 minutes of filling (Note 1), no initial charge is necessary.

Condition requiring initial charge	Charging method
At low temperature (lower than 0°C)	1.4 A x 2 ~ 3 hours
Battery has been stored under high temperature and humidity.	1.4 A x 15 ~ 20 hours
Seal sheet has been removed, or broken – peeling, tear or hole.	
Battery as old as 2 years or more after manufacture. Battery manufacturing date is printed on battery top. Example) 12 (Day) 10 (Month) 95 (Year) T1 (Mfg. location)	

Note 1 : Terminal voltage – To measure battery terminal voltage, use a digital voltmeter.

Precautions

1) No need of topping-up
No topping-up is necessary in this battery until it ends its life under normal use. Forcibly prying off the seal cap to add water is very dangerous. Never do that.

2) Refreshing charge
If an engine will not start, a horn sounds weak, or lamps are dim, it indicates the battery has been discharged. Give refresh charge for 5 to 10 hours with charge current shown in the specification (see this chapter).
When a fast charge is inevitably required, do it following precisely the maximum charge current and time conditions indicated on the battery.

CAUTION

This battery is designed to sustain no unusual deterioration if refresh-charged according to the method specified above. However, the battery's performance may be reduced noticeably if charged under conditions other than given above. Never remove the seal cap during refresh charge.
If by chance an excessive amount of gas is generated due to overcharging, the safety valve operates to keep the battery safe.

3) When you do not use the motorcycle for months:
Give a refresh charge before you store the motorcycle and store it with the negative lead removed. Give a refresh charge **once a month** during storage.

4) Battery life:
If the batter will not start the engine even after several refresh charges, the battery has exceeded its useful life. Replace it. (Provided, however, the vehicle's starting system has no problem).

⚠WARNING

Keep the battery away from sparks and open flames during charging, since the battery gives off an explosive gas mixture of hydrogen and oxygen. When using a battery charger, connect the battery to the charger before turning on the charger. This procedure prevents sparks at the battery terminals which could ignite any battery gases.
No fire should be drawn near the battery, or no terminals should have the tightening loosened.
The electrolyte contains sulfuric acid. Be careful not to have it touch your skin or eyes. If touched, wash it off with liberal amount of water. Get medial attention if severe.

Interchange

A maintenance free battery can fully display its performance only when combined with a proper vehicle electric system. Therefore, replace a maintenance free battery only on a motorcycle which was originally equipped with a maintenance free battery.

Be careful, if a maintenance free battery is installed on a motorcycle which had an ordinary battery as original equipment, the maintenance free battery's life will be shortened.

Charging Condition Inspection

○ Battery charging condition can be checked by measuring battery terminal voltage.

● Remove the front seat (see Frame chapter).

● Disconnect the battery terminals.

CAUTION
Be sure to disconnect the negative terminal first.

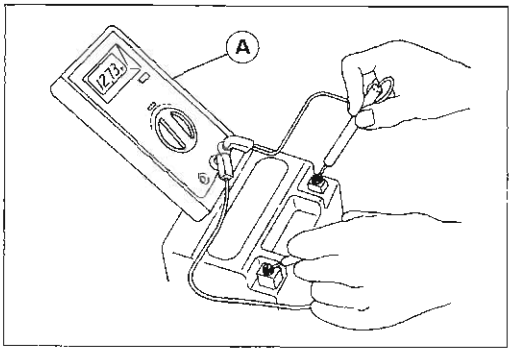

● Measure the battery terminal voltage.

NOTE

○ *Measure with a digital voltmeter [A] which can be read one decimal place voltage.*

★ If the reading is below the specified, refreshing charge is required.

Battery Terminal Voltage
Standard: 12.8 V or more

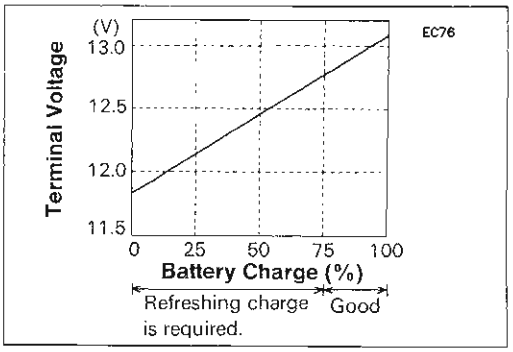

Refreshing Charge

● Disconnect the battery terminals (see Charging Condition Inspection).

● Remove the battery [A].

● Do refresh-charge by following method according to the battery terminal voltage.

⚠WARNING
This battery is sealed type. Never remove seal cap [B] even at charging. Never add water. Charge with current and time as stated below.

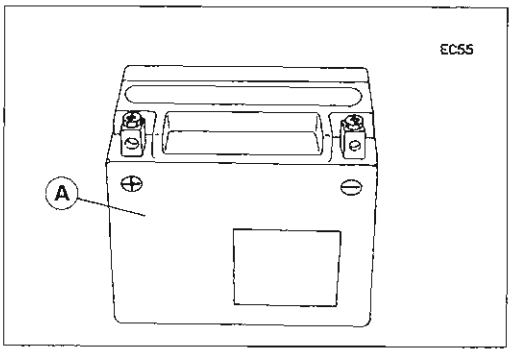

Terminal Voltage: 11.5 ~ less than 12.8 V
Standard Charge
1.4 A x 2 ~ 12 h (see following chart)
Quick Charge
7.0 A x 1.0 h

CAUTION
If possible, do not quick charge. If the quick charge is done due to unavoidable circumstances, do standard charge later on.

Terminal Voltage: less than 11.5 V
Charging Method : 1.4 A x 20 h

NOTE

○ *If the current does not flow when charging, raise the voltage initially (25 V as maximum), and charge for about 5 minutes as a yardstick. If ammeter shows no change in current after 5 minutes, you need a new battery. The current, if it can flow into the battery, tends to become excessive. Adjust the voltage as often as possible to keep the current at standard value (1.4 A).*

Battery [A] Standard Value [C]
Battery Charger [B]

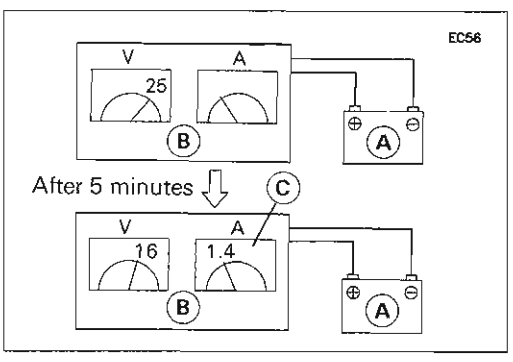

Battery Standard Charge Time Chart

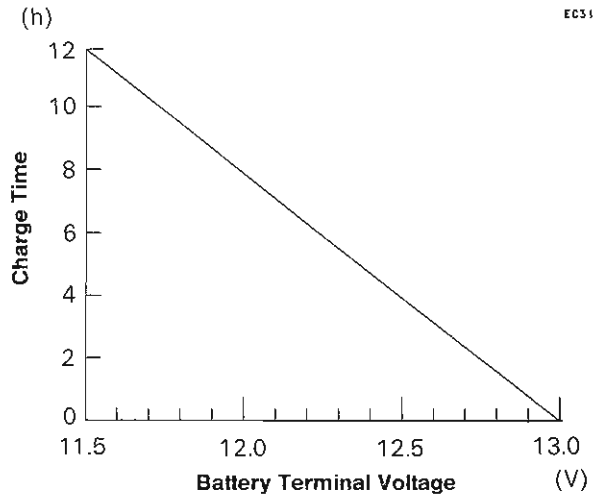

● Determine battery condition after refreshing charge.
○ Determine the condition of the battery 30 minutes after completion of the charge by measuring the terminal voltage according to the table below.

Criteria	Judgement
12.8 V or higher	Good
12.0 ~ 12.8 V or lower	Charge insufficient → Recharge.
12.0 V or lower	Unserviceable → Replace

Alternator

Alternator Outer Cover Removal

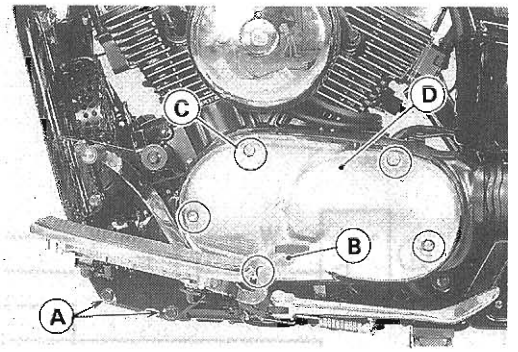

- Remove:
  Front Footpeg and Bolts [A]
  Rear Shift Pedal [B]
- Unscrew the bolts [C] and take off the alternator outer cover [D].

Alternator Outer Cover Installation

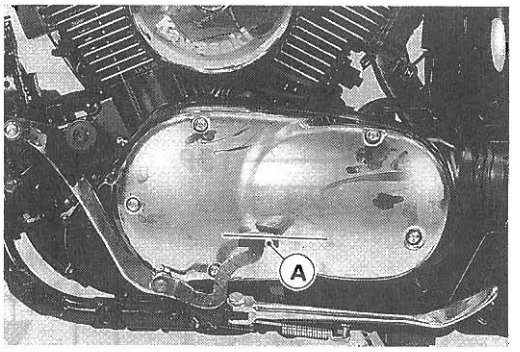

- Install the rear shift pedal so that the pad [A] is almost horizontal.
- Apply a soap and water solution to the body of the alternator outer cover bolts for easy installation.

Torque – Alternator Outer Cover Bolts: 12 N-m (1.2 kg-m, 104 in-lb)

Alternator Inner Cover Removal

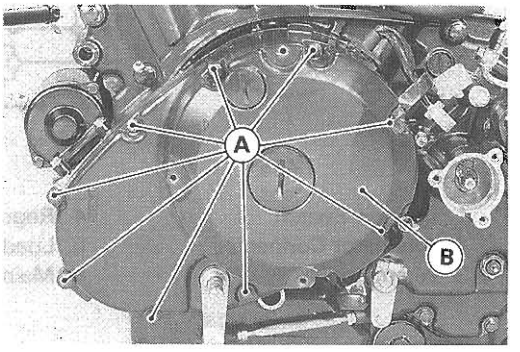

- Remove:
  Alternator Outer Cover (see this chapter)
  Alternator, Pickup Coil, Regulator/Rectifier Connectors
  Engine (see Engine Removal/Installation in the Base Manual)
- Unscrew the bolts [A] and take off the alternator inner cover [B].

○ The front shift lever and shaft come off with the cover.

Charging System Circuit

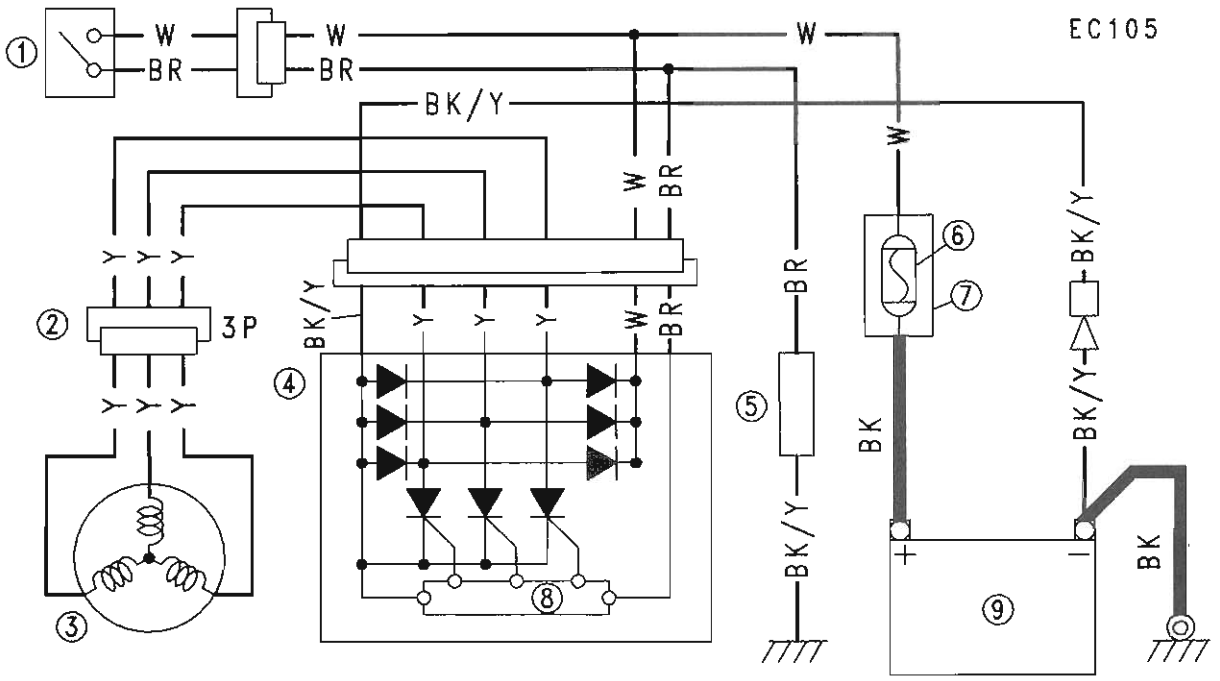

Ignition System

Ignition System Circuit

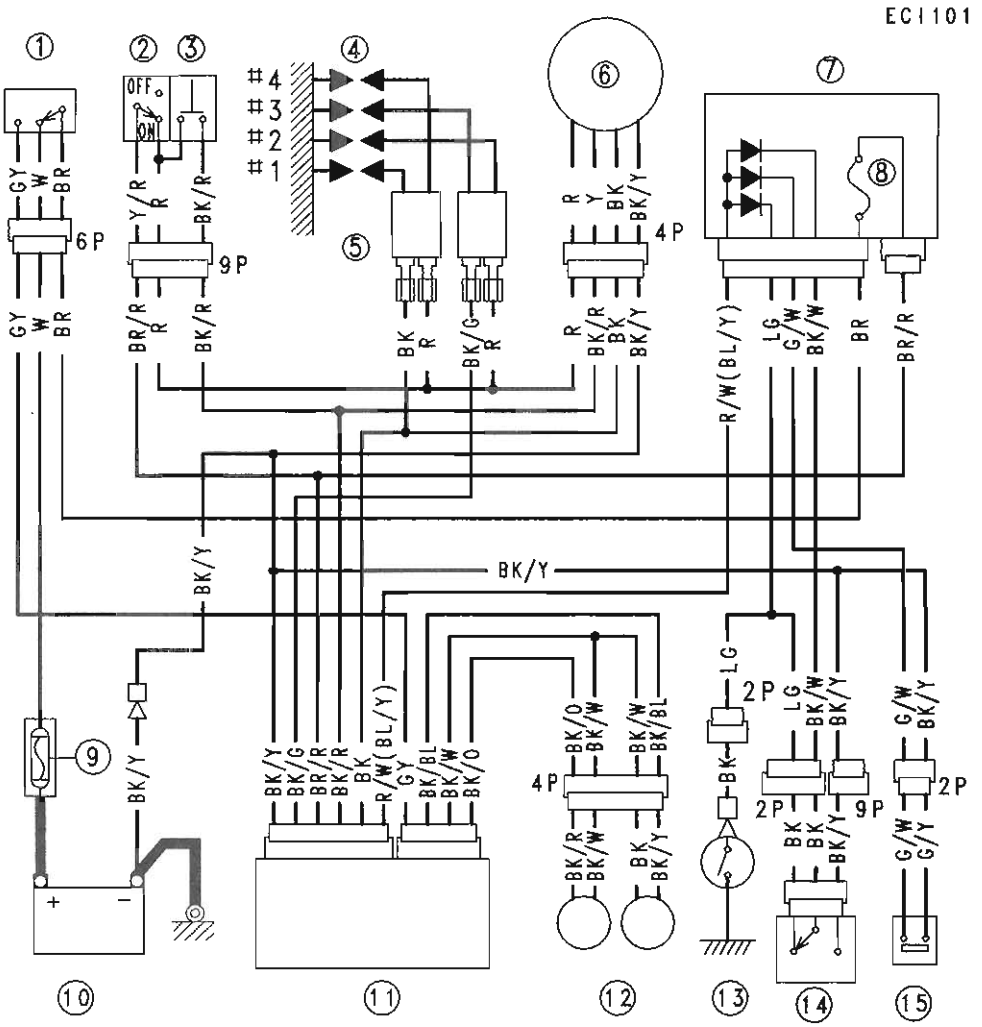

( ): other than US, CN, and AS

1. Ignition Switch
2. Engine Stop Switch
3. Starter Button
4. Spark Plugs
5. Ignition Coils
6. Fuel Pump
7. Junction Box
8. Ignition Fuse 10 A
9. Main Fuse 30 A
10. Battery
11. IC Igniter
12. Pickup Coils
13. Neutral Switch
14. Starter Lockout Switch
15. Sidestand Switch

Pickup Coil Removal

- Remove the alternator outer cover (see this chapter)
- Pull off the pickup coil connector [A].
- Remove the engine (see Engine removal/Installation).
- Remove the alternator inner cover [B].

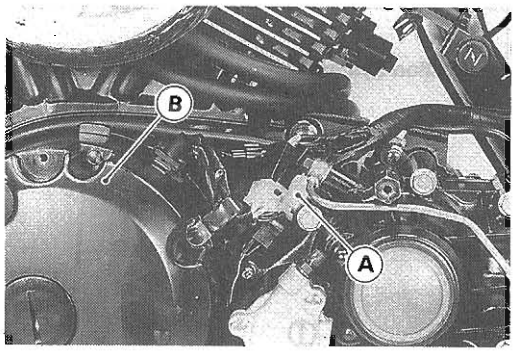

- Remove the pickup coils [A] from the alternator inner cover [B].

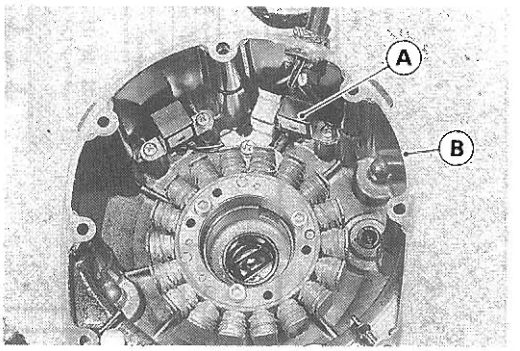

Pickup Coil Installation

- Install the pickup coils as shown.
  Pickup Coil [A] with longer leads (BK and BK/Y) for #1 (front)
  Pickup Coil [B] with shorter leads (BK/W and BK/R) for #2 (rear)
- Bend the leads sharply along the cover inside so that the slack is as little as possible not to touch the alternator rotor.
- Apply silicone sealant to the pickup coil lead grommet [C] and push into the notch of the alternator inner cover with the round mark [D] up.

  Alternator Lead Grommet [E]

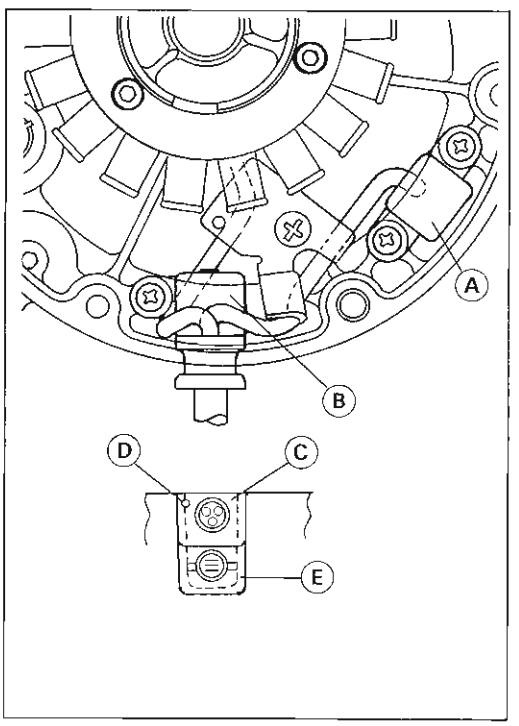

Ignition Timing Inspection

- Remove the alternator outer cover (see this chapter).
- Remove the ignition timing inspection plug.
- Attach the timing light [A] in the manner prescribed by the manufacturer.

  Special Tool – Timing Light: 57001-1241

- Start the engine and aim the timing light at the ignition timing mark on the alternator rotor.
- Run the engine at the speeds specified and note the alignment of the ignition timing marks.

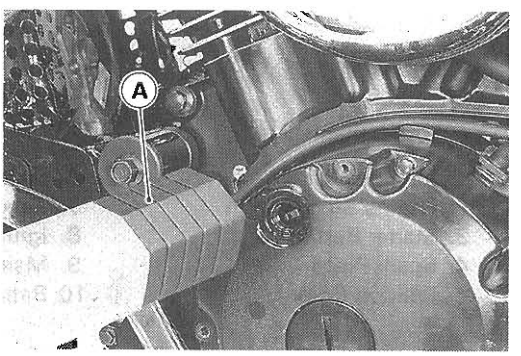

Ignition Timing

Engine speed r/min (rpm)	Crankcase rib [A] aligns with:
800 (FG, AR, CA, ST 1000) and below	F mark [B] on alternator rotor
3 500 and above	Advance mark [C] on alternator rotor

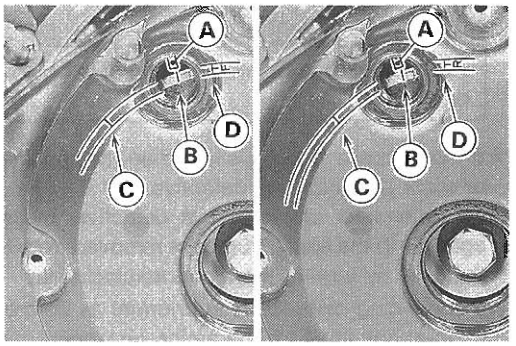

NOTE

○*Do not mix up the ignition timing marks with the top mark "T" [D].*

● Repeat the test for the other cylinder.

★ If the ignition timing is incorrect, replace the IC igniter and the pickup coil.

Ignition Coil Removal

● Remove the fuel tank (see Fuel System chapter).

● Disconnect the primary leads and remove the mounting nuts [A].

● Pull off the secondary leads from the spark plugs.

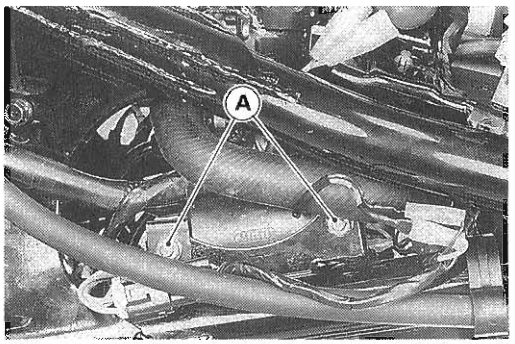

● Take out the ignition coil [A] as shown.

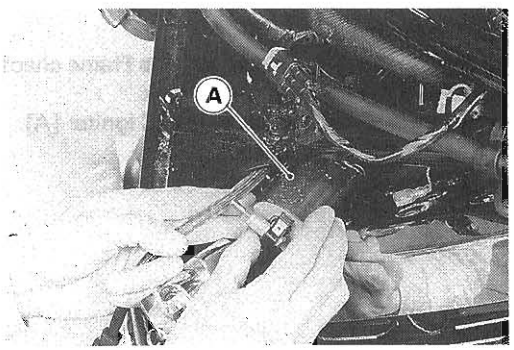

Ignition Coil Installation

● Install the ignition coils, noting the following.

○ Connect the primary leads to the ignition coil terminals and run the secondary leads according to the Cable, Wire, and Hose Routing section in the General Information chapter.

Ignition Coil Inspection

● Remove the ignition coils (see this chapter).

● Measure the arcing distance with the suitable commercially available coil tester [A] to check the condition of the ignition coil [B].

● Connect the ignition coil (with the spark plug cap left attached at the end of the spark plug lead) to the tester in the manner prescribed by the manufacturer and measure the arcing distance.

Ignition Coil Arcing Distance: 6mm or more

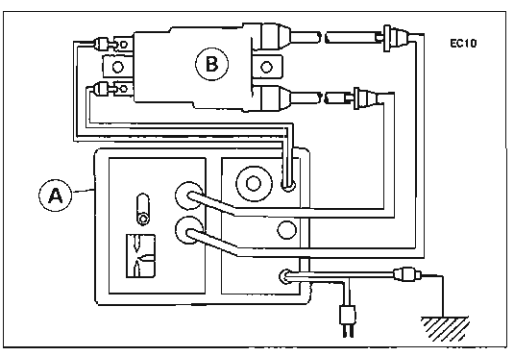

⚠WARNING

To avoid extremely high voltage shocks, do not touch the coil body or leads.

★If the distance reading is less than the specified value, the ignition coil or spark plug caps are defective.

●To determine which part is defective, measure the arcing distance again with the spark plug caps removed from the ignition coil. Remove the caps by turning them counterclockwise.

★If the arcing distance is subnormal as before, the trouble is with the ignition coil itself. If the arcing distance is now normal, the trouble is with the spark plug cap.

IC Igniter Inspection

●Remove the right side cover (see Frame chapter).
●Remove the coolant reserve tank.
●Pull the connectors out of the IC igniter [A].
●Remove the IC igniter.

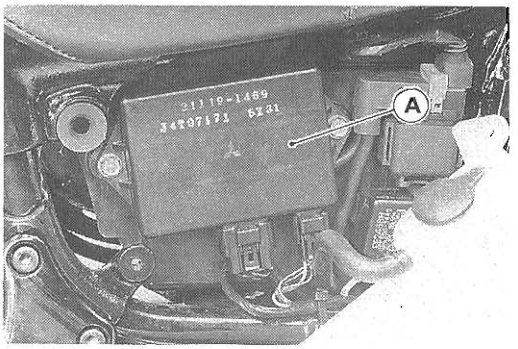

●To check the condition of the IC igniter, connect the igniter checker to the IC igniter as shown.

Special Tools – Igniter Checker: 57001-1378 [A]
Harness Adapter #12: 57001-1397 [B]
Harness Adapter: 57001-1383 [C]

IC Igniter [D] Battery [E]

○Turn the select knob to "D" position.

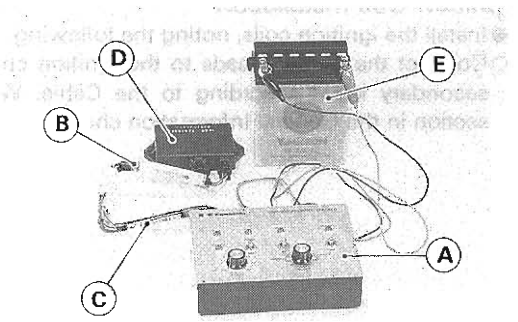

NOTE

○*When using the igniter checker, refer to the manufacturer's instructions.*
○*Using the igniter checker is a more reliable way to determine the condition of the IC igniter than igniter internal resistance measurements.*
○*The igniter checker can detect the simulated dynamic characteristics: igniter response to r.p.m., interlock circuit signal, tachometer signal and engine overspeed limiter signal.*
○*The igniter checker cannot inspect the condition of the CDI unit.*

★If the igniter checker is not available, the IC igniter can be checked for a broken or badly shorted wiring with the hand tester (special tool).

●Set the hand tester (special tool) to the x 1 kΩ range and make the measurements shown in the table.

Special Tool – Hand Tester: 57001-1394

★If the tester readings are not as specified, replace the IC igniter.

CAUTION
Use only Hand Tester 57001-983 for this test. A tester other than the Kawasaki Hand Tester may show different readings. **If a megger or a meter with a large-capacity battery is used, the IC igniter will be damaged.**

IC Igniter Internal Resistance (4P) **Unit: kΩ**

		Tester (+) Lead Connection			
	Terminal	1	2	3	4
(−)*	1	–	26 ~ 150	26 ~ 150	60 ~ 400
	2	28 ~ 150	–	0 ~ 0.8	28 ~ 150
	3	28 ~ 150	0 ~ 0.8	–	28 ~ 150
	4	60 ~ 400	26 ~ 150	26 ~ 150	–

(−)*: Tester (−) Lead Connection

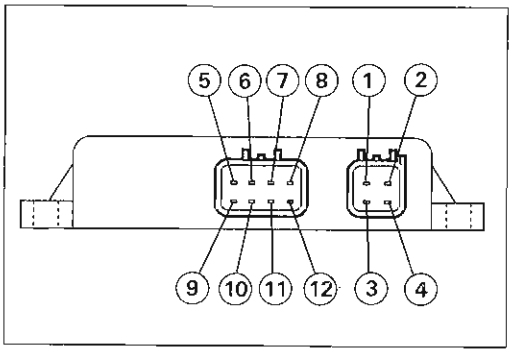

IC Igniter Internal Resistance (8P)

		Tester (+) Lead Connector							
	Terminal	5	6	7	8	9	10	11	12
(−)*	5	–	∞	∞	∞	∞	∞	∞	∞
	6	35 ~ 200	–	∞	22 ~ 90	35 ~ 200	50 ~ 400	∞	18 ~ 80
	7	∞	∞	–	∞	∞	∞	∞	∞
	8	4.4 ~ 18	4.6 ~ 19	∞	–	4.4 ~ 18	3 ~ 13	∞	2 ~ 8.5
	9	∞	∞	∞	∞	–	∞	∞	∞
	10	∞	∞	∞	∞	∞	–	∞	∞
	11	∞	∞	∞	∞	∞	∞	–	∞
	12	1.4 ~ 6	1.6 ~ 7	∞	1.6 ~ 7	1.4 ~ 6	6 ~ 24	∞	–

(−)*: Tester (−) Lead Connection

Starter Motor

Removal

- Remove the radiator with the hoses attached for the access to the starter (see Cooling System chapter). Do not drain the coolant.
- Remove:
  Starter Motor Terminal Nut and Lead [A]
  Starter Motor Bolts [B]

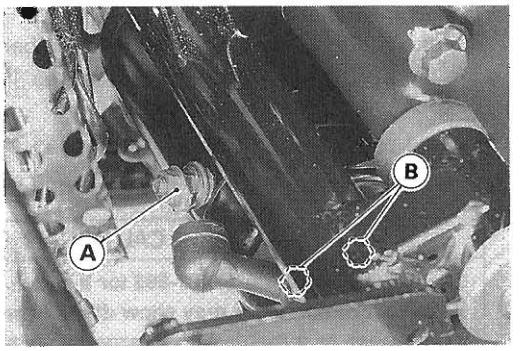

- Pull the starter motor [A] toward the left and remove it.

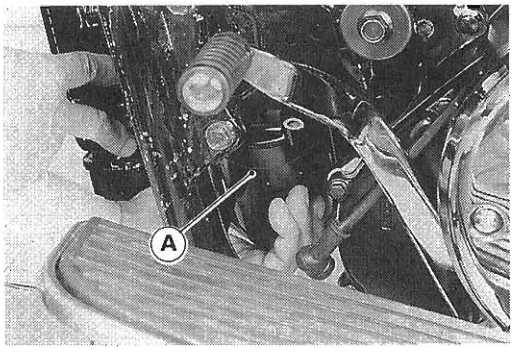

Starter Relay Inspection

- Remove the right side covers (see Frame chapter).
- Remove the coolant reserve tank, then the starter relay.
- Connect the hand tester [A] and 12 V battery [B] to the starter relay [C] as shown.

★If the relay does not work as specified, the relay is defective. Replace the relay.

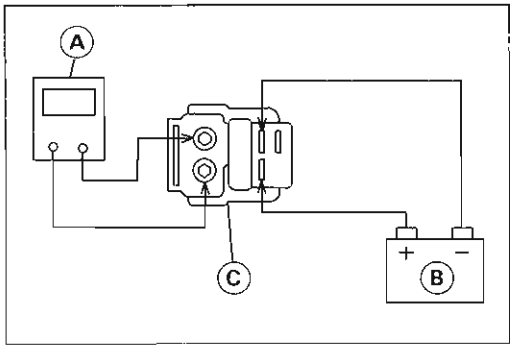

Testing Relay

Tester Range: x 1 Ω range

Criteria: **When battery is connected → 0 Ω**
When battery is disconnected → ∞ Ω

Electric Starter Circuit

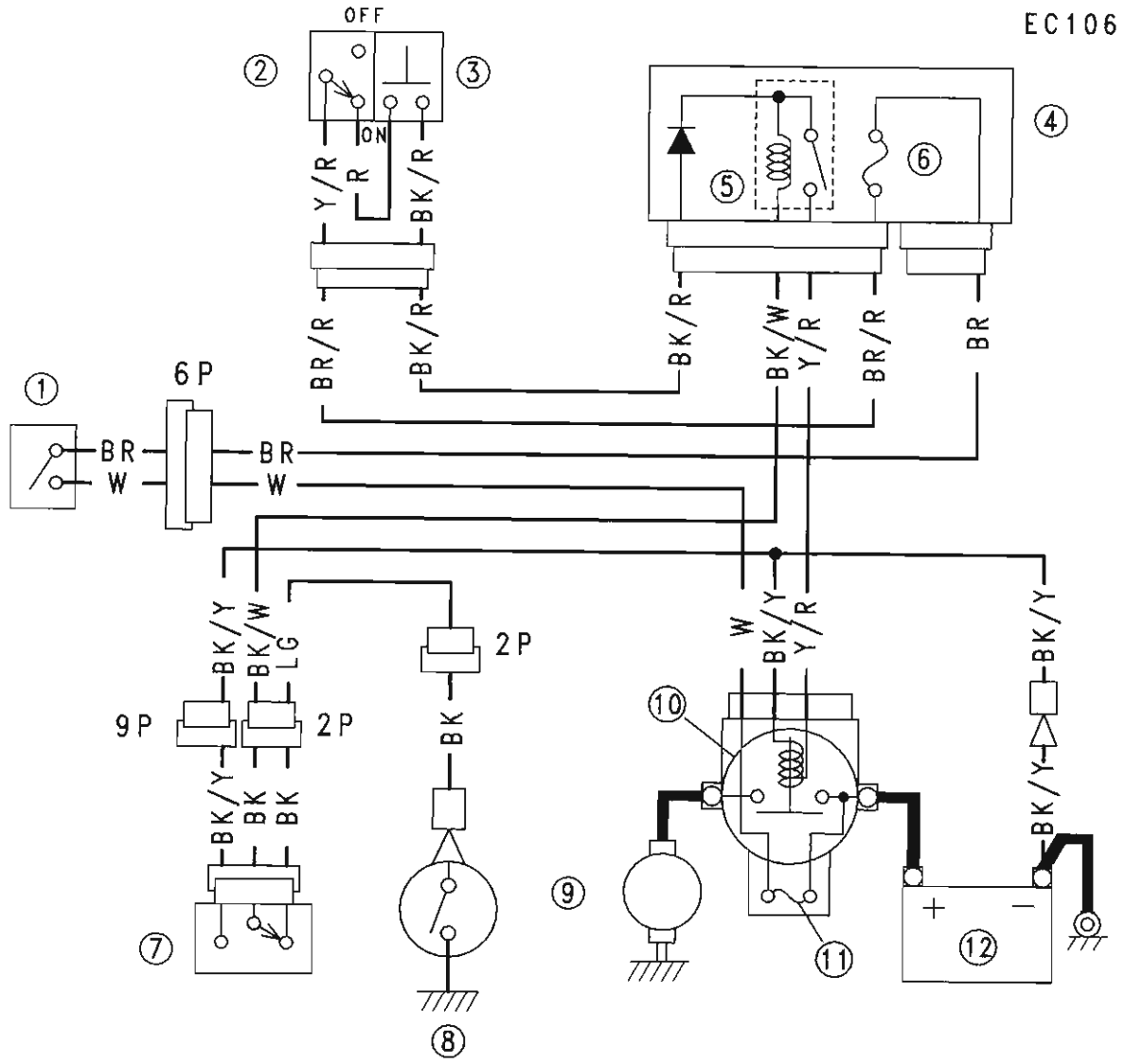

1. Ignition Switch
2. Engine Stop Switch
3. Starter Button
4. Junction Box
5. Starter Circuit Relay
6. Ignition Fuse 10 A
7. Starter Lockout Switch
8. Neutral Switch
9. Starter Motor
10. Starter Relay
11. Main Fuse 30 A
12. Battery

Headlight

US, Canada, and Australia models have a full-time headlight system with a headlight relay in the junction box. In these models, the headlight does not go on when the ignition switch and the engine stop switch are first turned on. The headlight comes on when the engine starts running and stays on even if the engine stalls. The headlight goes out when the ignition switch is turned off. It also goes out while the starter button is depressed.

Headlight Beam Horizontal Adjustment

- ●Turn the horizontal adjuster [A] on the headlight with a screwdriver in or out until the beam points straight ahead.
- ○Turn the adjuster clockwise to face the headlight to the left.

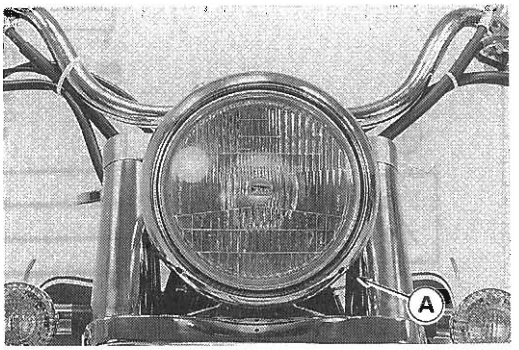

Headlight Beam Vertical Adjustment

- ●Turn the vertical adjuster [B] in the headlight in or out with a screwdriver to adjust the headlight vertically.
- ○Turn the adjuster clockwise to face the headlight up.

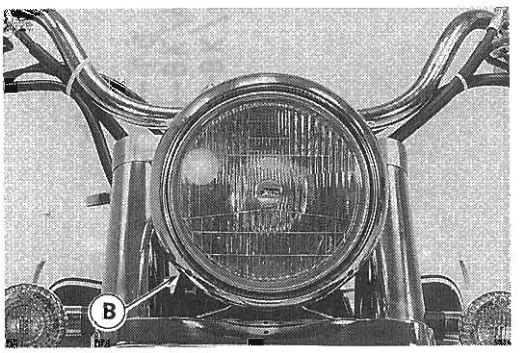

NOTE

- ○*ON high beam, the brightest points should be slightly below horizontal with the motorcycle on its wheels and the rider seated. Adjust the headlight to the proper angle according to local regulations.*
- ○*For US model, the proper angle is 0.4 degrees below horizontal. This is 50 mm (2 in.) drop at 7.6 m (25 ft.) measured from the center of the headlight with the motorcycle on its wheels and the rider seated.*

50 mm (2 in) [A] Center of Brightest Spot [B] 7.6 m (25 ft) [C]

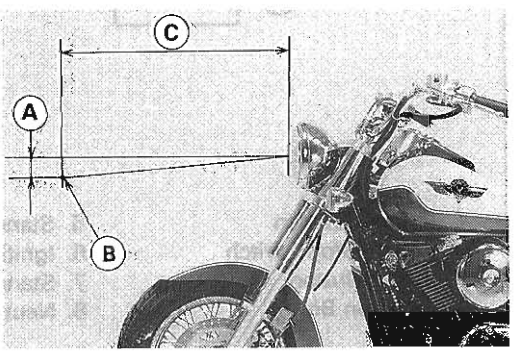

Headlight Bulb Replacement

- ●Remove the headlight rim screws [A].

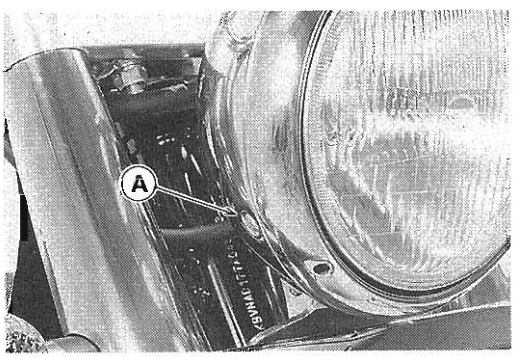

● Pull the headlight unit and drop it out.
● Remove the headlight dust cover [A].
● Push the hook [B] to unlock.

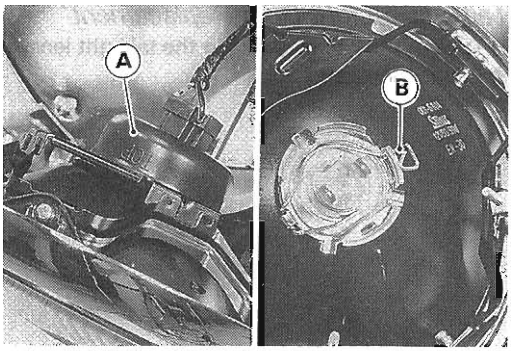

● Take out the bulb [A].

CAUTION
When handing the guartz-halogen bulb, never touch the glass portion with bare hands. Always use a clean cloth. Oil contamination from hands or dirty rags can reduce bulb life or cause the bulb to explode.

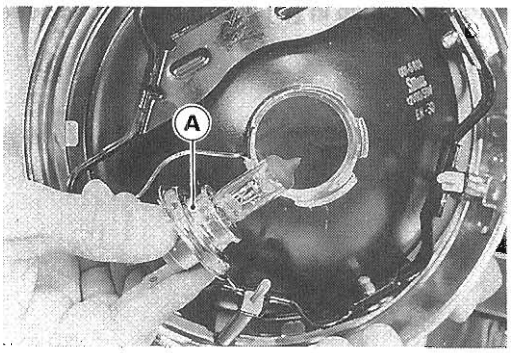

○ Clean off any contamination that inadvertently gets on the bulb with alcohol or soap and water solution.

● Replace the headlight bulb.
● Fit the dust cover [A] with the TOP mark [B] upward onto the bulb [C] firmly as shown.
● Tighten:

Torque – Headlight Rim Screws: 1.0 N-m (0.10 kg-m, 9 in-lb)

● After installation, adjust the headlight aim (see this chapter).

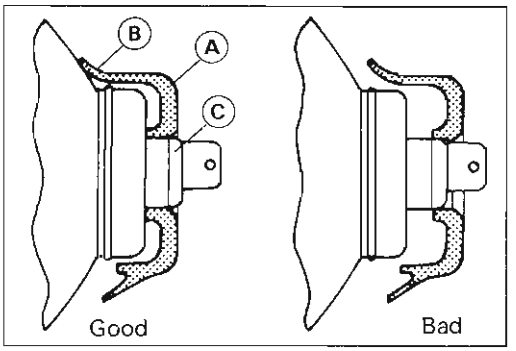

Headlight Body Removal

● Remove the headlight rim screws [A].
● Pull the headlight unit and drop it out.

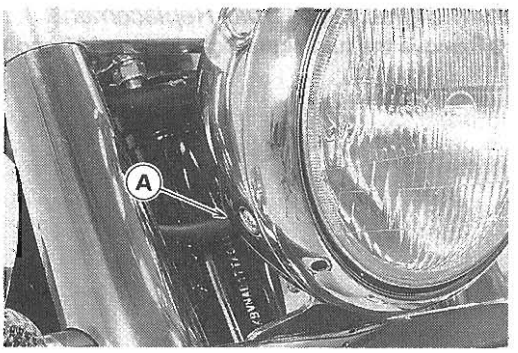

● Disconnect the wiring connectors [A].
● Remove the headlight body bolts and nuts [B], then take off the body [C].

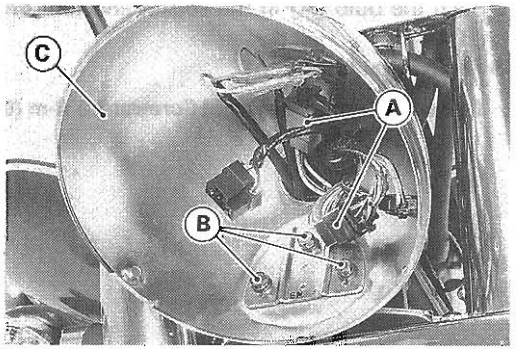

Tail/Brake Light Bulb Replacement

- Take out the screws [A] in the taillight lens.
- Pull the lens off.

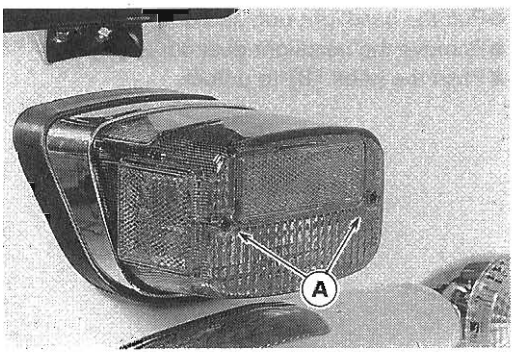

- Push the bulb in [A], turn it counterclockwise [B], and pull it out.

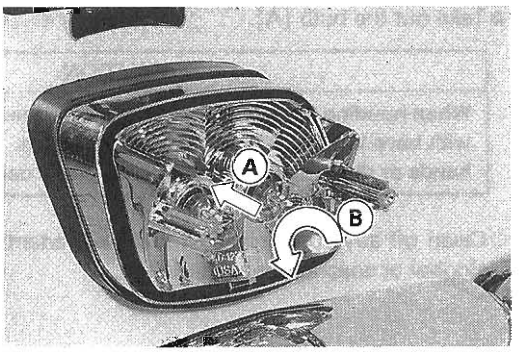

- With the front pin [A] up and the rear pin [B] down, insert the new bulb by aligning the front pin with the groove in the walls of the socket [C].
- Push the bulb in, turn it clockwise, and release it. It should lock in position.
- Tighten the lens screws. Be careful not to overtighten them.

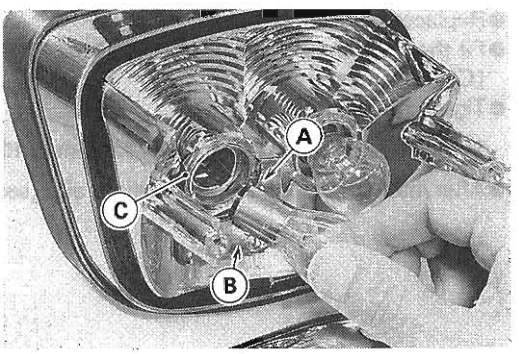

Turn Signal Light Bulb Replacement

- Remove the turn signal light screws [A] and take off the lens [B].

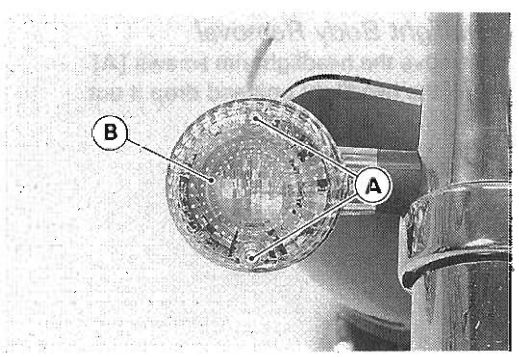

- Push the bulb [A] in the socket and turn the bulb counterclockwise [B].
- Replace the bulb.

Torque – Turn Signal Light Screws: 1.0 N-m (0.10 kg-m, 9 in-lb)

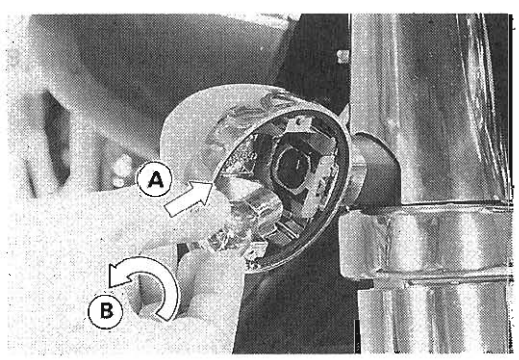

Turn Signal Relay Inspection

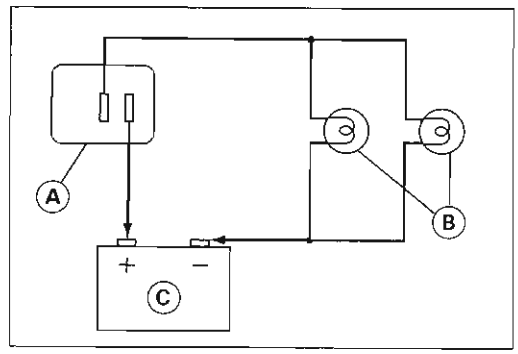

- Remove the right side cover (see Frame chapter).
- Remove the coolant reserve tank.
- Connect one 12 V battery and turn signal lights as indicated in the figure, and count how may times the lights flash for one minute.

  Turn Signal Relay [A]
  Turn Signal Lights [B]
  12 V Battery [C]

★If the lights do not flash as specified, replace the turn signal relay.

Testing Turn Signal Relay

Load		Flashing times (c/m*)
The Number of Turn Signal Lights	Wattage (W)	
1 **	21 – 23	Light stay on
2	42 – 46	75 – 95

(*): Cycle(s) per minute
(**): Corresponds to "light burned out".

Headlight Circuit (Other than U.S., Canada, and Australia)

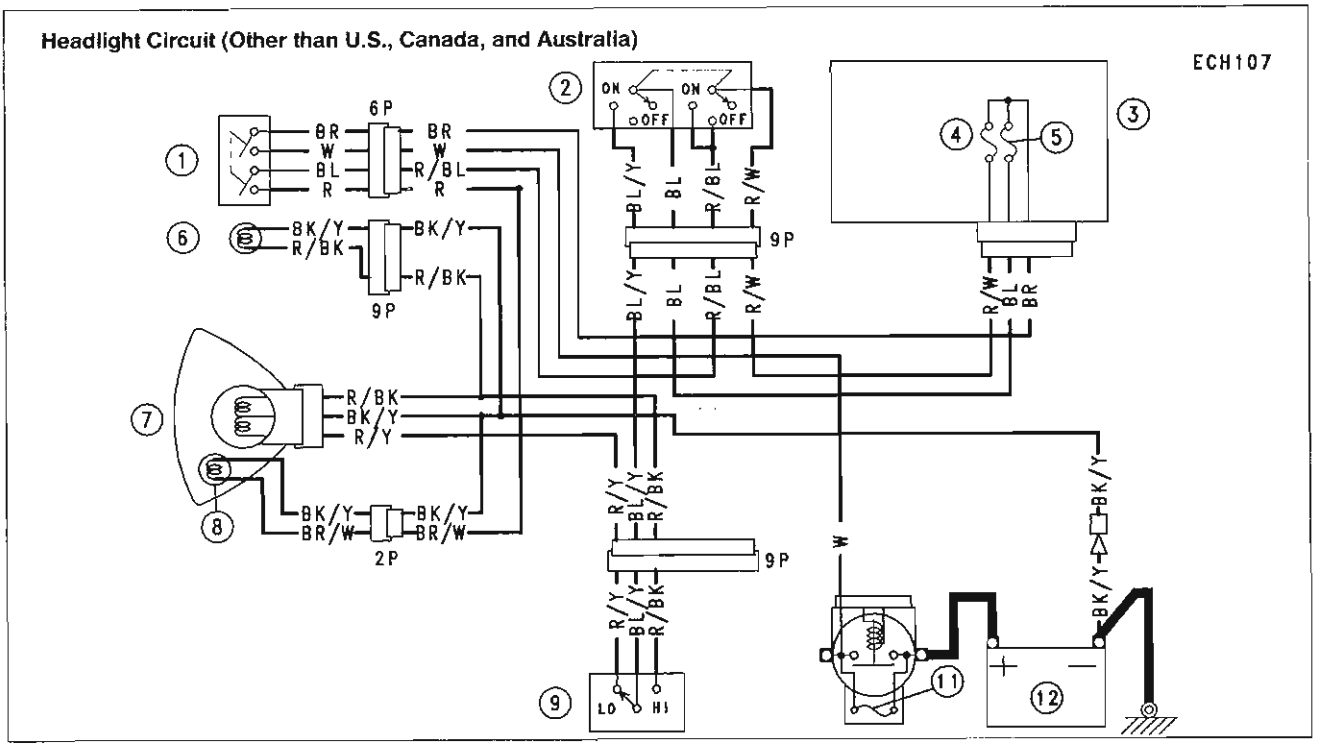

Headlight Circuit (U.S., Canada, and Australia)

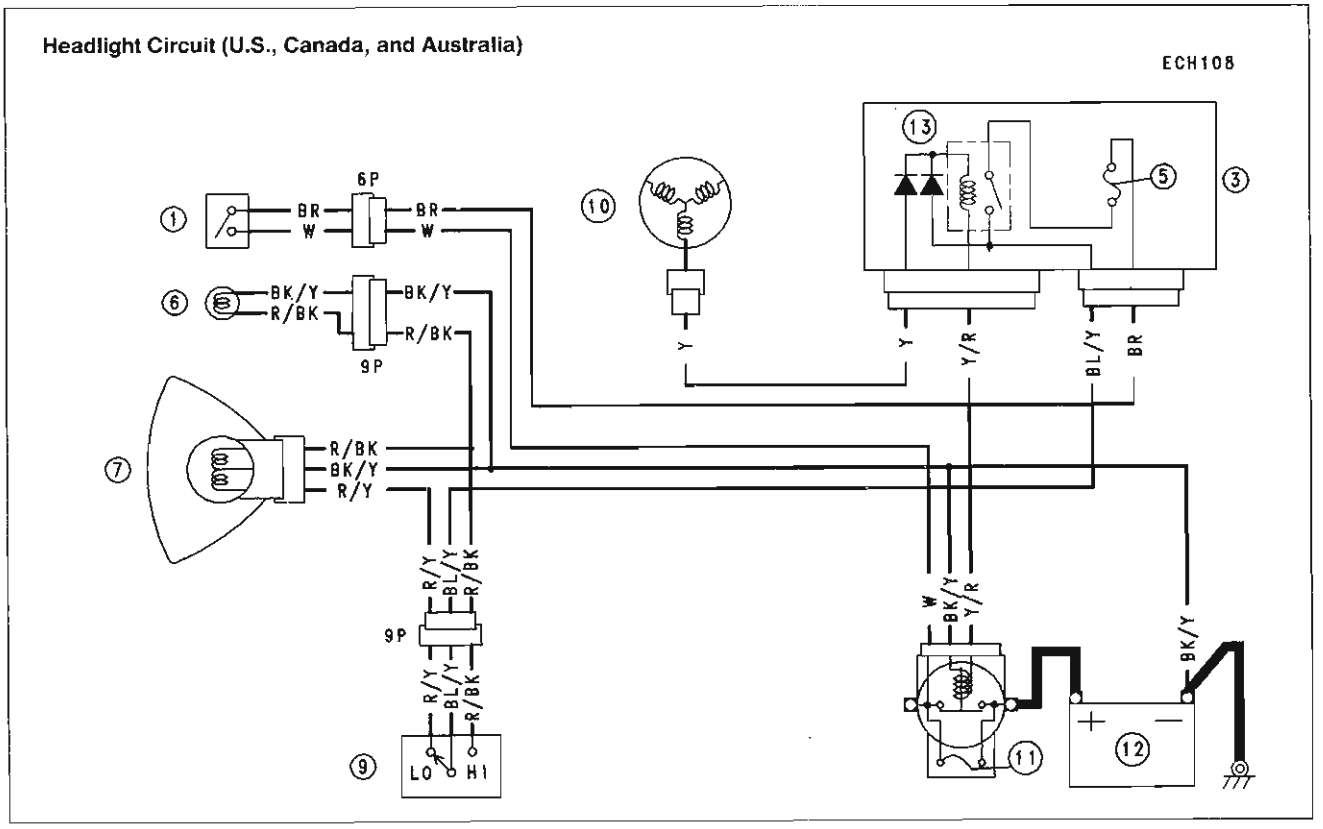

1. Ignition Switch
2. Headlight Switch
3. Junction Box
4. Taillight Fuse 10A
5. Headlight Fuse 10A
6. High Beam Indicator Light
7. Headlight
8. City Light
9. Dimmer Switch
10. Alternator
11. Main Fuse 30A
12. Battery
13. Headlight Relay

Fuel Pump

○The fuel pump [A] operates when the starter button is pushed on or the engine is running.
○When fuel level in the float chamber is low, the fuel pump operates to supply fuel into the float chamber. When the fuel reaches a certain level, the fuel pressure rises, and the fuel pump stops.

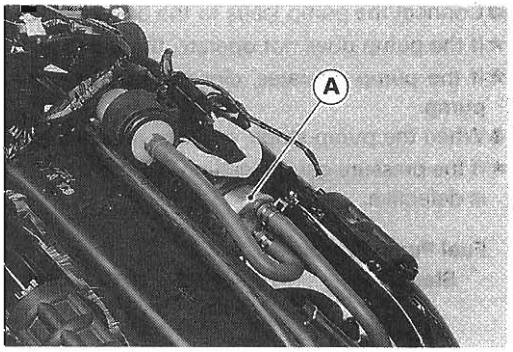

Removal/Installation

● Refer to the fuel system chapter.

Internal Resistance

● Remove the fuel tank (see Fuel System chapter).
● Disconnect the fuel pump connector [A].
● Set the hand tester to the x 1 kΩ range and make the measurements shown in the table.

Special Tool – Hand Tester: 57001-1394

★If the tester readings are not as specified, replace the fuel pump.
★If the tester readings are normal, check the fuel pump operation.

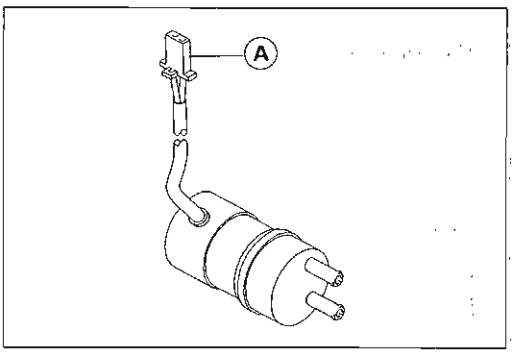

CAUTION
Use only Hand Tester 57001-1394 for this test. An ohmmeter other than the Kawasaki Hand Tester may show different readings. If a megger or a meter with a large-capacity battery is used, the pump relay will be damaged.

Fuel Pump Internal Resistance

		Tester (+) Lead Connection		
		R	BK	Y
*	R	–	∞	∞
	BK	∞	–	∞
	Y	∞	More than 20 kΩ	–

(*): Tester (–) Lead Connection

Operation Check

● Remove the fuel pump with the fuel filter (see Fuel System chapter).
● Prepare a container filled with kerosene.
● Prepare the rubber hoses, and connect them to the pump fittings.
● Connect the suitable pressure gauge to the outlet hose as shown.

Fuel Pump [A]
Pressure Gauge [B]
Outlet Hose [C]
Inlet Hose [D]
Fuel Filter [E]
Kerosene [F]
2-Pin Connector [G]
Battery [H]
Auxiliary Leads [I]

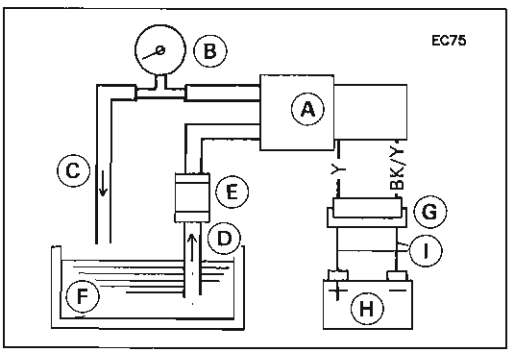

●Connect the pump leads to the battery using auxiliary wires as shown.
★If the pump does not operate, the pump is defective.
★If the pump operates, close the outlet hose while operating the fuel pump.
●When the pump stops, read the pressure gauge.
★If the pressure gauge reading is out of the specified pressure, the pump is defective.

Fuel Pump Pressure
Standard: **14 ~ 19 kPa (0.14 ~ 0.19 kg/cm², 2.0 ~ 2.7 psi)**

Fuel Pump Circuit

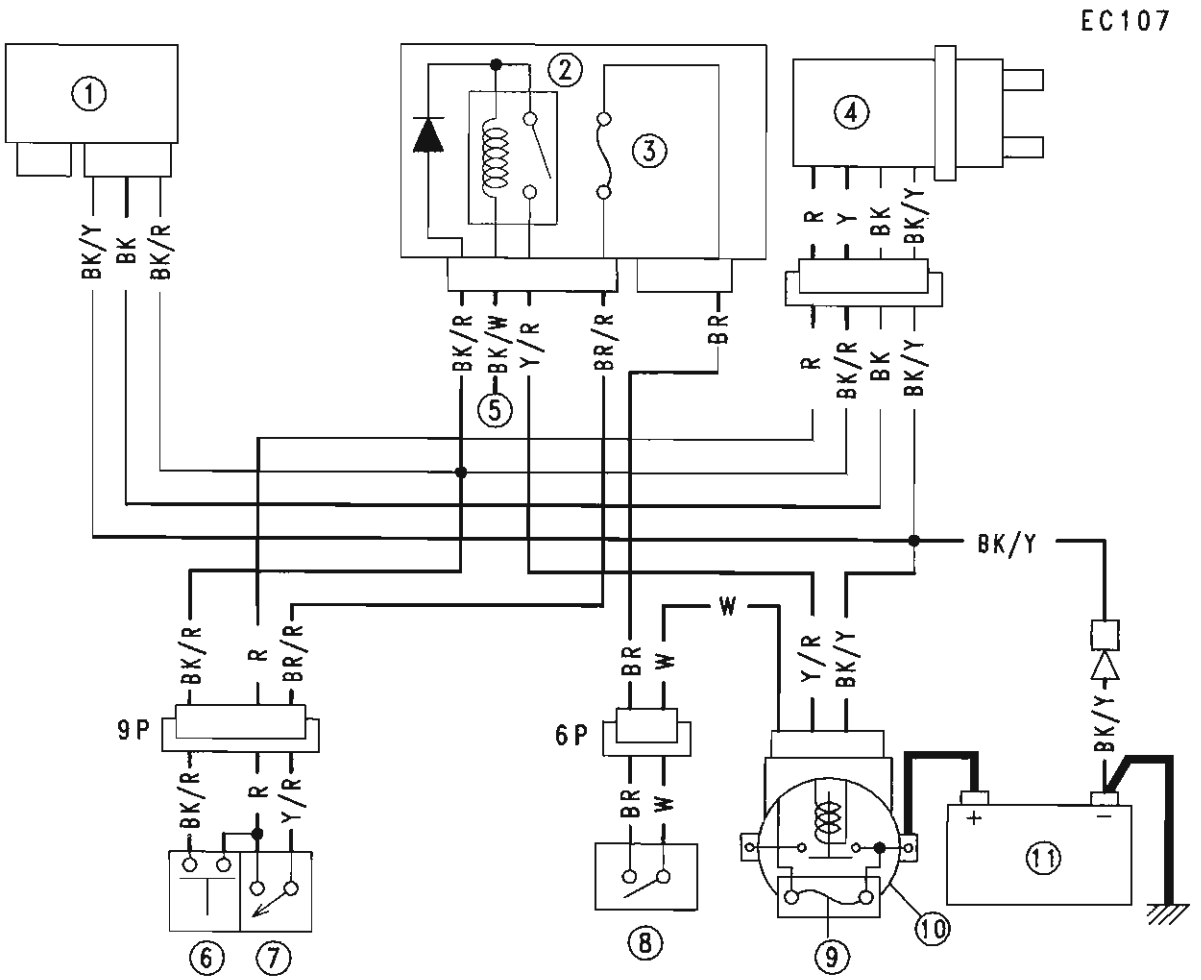

1. IC Igniter
2. Starter Circuit Relay
3. Ignition Fuse 10A
4. Fuel Pump
5. Starter Lockout Switch
6. Starter Button
7. Engine Stop Switch
8. Ignition Switch
9. Main Fuse 30A
10. Starter Relay
11. Battery

Radiator Fan System

⚠WARNING

The radiator fan is connected directly to the battery. The fan may start even if the ignition switch is off. NEVER TOUCH THE RADIATOR FAN UNTIL THE RADIATOR FAN CONNECTOR IS DISCONNECTED. TOUCHING THE FAN BEFORE THE CONNECTOR IS DISCONNECTED COULD CAUSE INJURY FROM THE FAN BLADES.

Fan System Circuit Inspection

- Disconnect the leads from the radiator fan switch [A].
- Using an auxiliary wire [B], connect the radiator fan switch leads.

★If the fan rotates, inspect the fan switch.

★If the fan does not rotate, inspect the following.

Leads and Connectors Fan Motor
Main Fuse and Fan Fuse

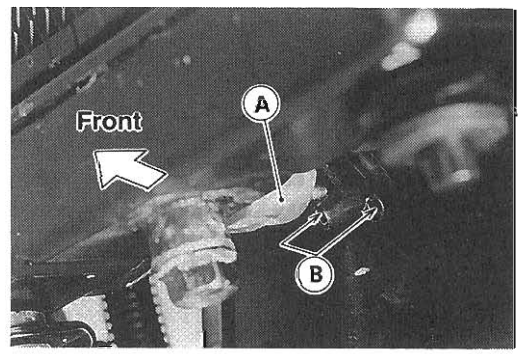

Fan Motor Inspection

- Remove the fuel tank (see Fuel System chapter).
- Disconnect the leads [A] from the radiator fan switch [B].
- Using two auxiliary wires [C], supply battery [D] power to the fan motor.

★If the fan dose not rotate, the fan motor is defective and must be replaced.

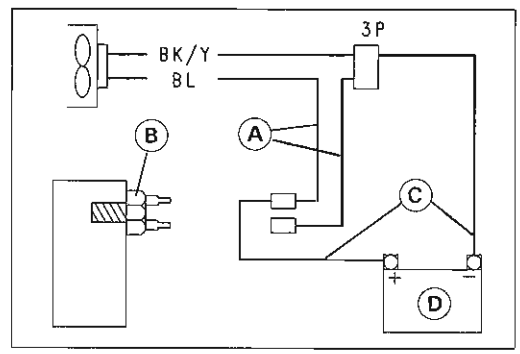

Radiator Fan Circuit

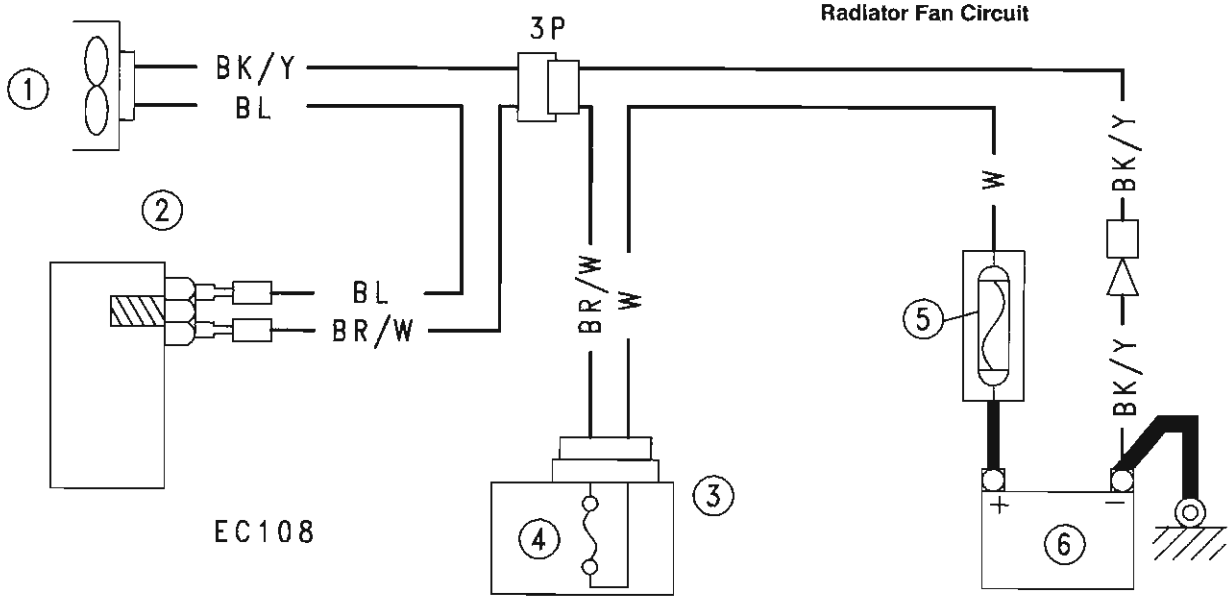

1. Radiator Fan
2. Radiator Fan Switch
3. Junction Box
4. Fan Fuse 10A
5. Main Fuse 30A
6. Battery

Meter, Gauge

Meter Unit Removal

● Remove the bolt [A], and separate the meter unit [B] from the fuel tank.

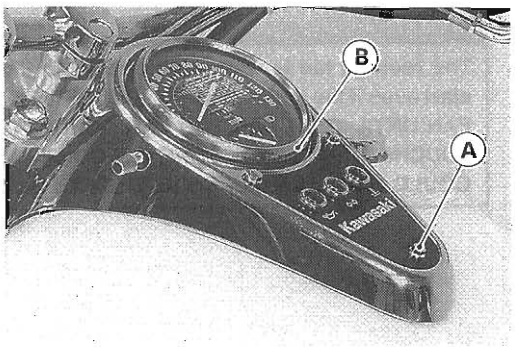

● Remove:

Connectors [A]
Speedometer Cable [B]

CAUTION
Place the meter so that the face is up. If a meter is left upside down or sideways for any length of time, it will malfunction.

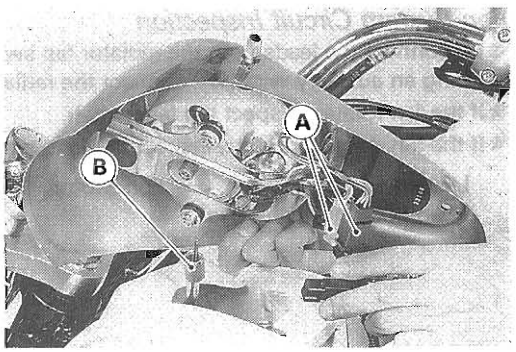

Meter Unit Installation

● Insert the tongue [A] of the meter panel into the damper slit [B] of the fuel tank.

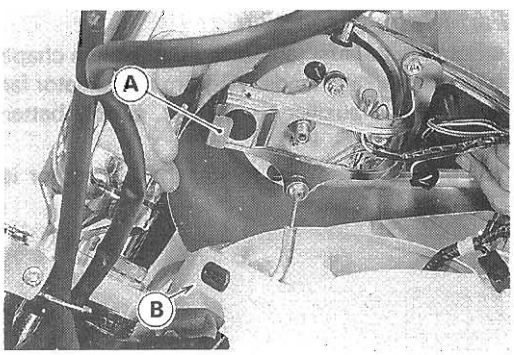

Meter Unit Disassembly

● Remove:

Meter Unit (see this chapter)
Screw [A] and Knob [B]
Nuts [C]
Speedometer [D]

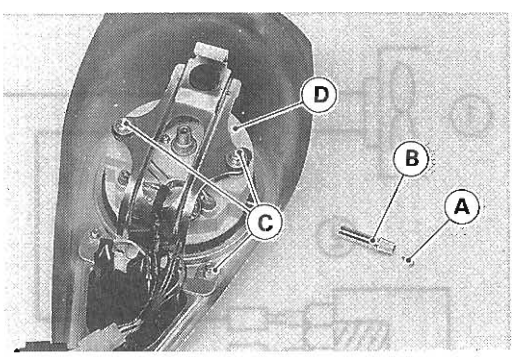

Bulb Replacement

● To remove the wedge-base type bulb [A], pull the bulb out of the socket [B].

CAUTION
Do not turn the bulb. Pull the bulb out to prevent damage to the bulb. Do not use bulb rated for other than voltage or wattage specified in the wiring diagram.

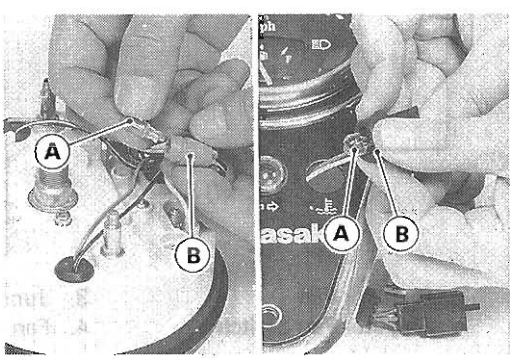

Water Temperature Warning System Inspection

The water temperature warning light goes on when the ignition switch is turned on and goes off soon after the engine starts running (oil pressure switch off) to ensure that its circuit functions properly. The warning light also goes on whenever the coolant temperature rises to **110 ~ 120°C (230 ~ 248°F)** when the motorcycle is in operation. If it stays on, stop the engine and check the coolant level in the reserve tank after the engine cools down.

- Inspect the water temperature warning light and the system wiring (see Wiring Inspection).
- Turn on the ignition switch.
- Disconnect the water temperature switch lead [A] and oil pressure switch lead, then ground them to the frame or engine using auxiliary lead.

★If the warning light is lit, inspect the water temperature switch [B] (see Specifications) and the oil pressure switch [C]. Replace any switch if damaged.

★If the warning light is not lit, check the warning light bulb.

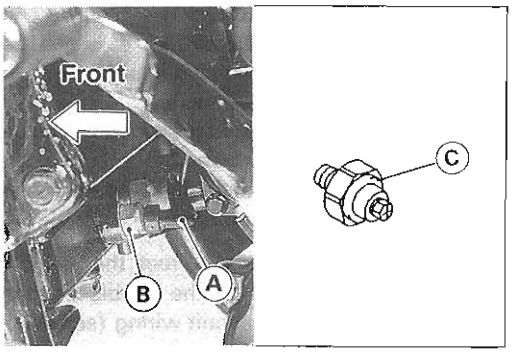

Water Temperature Warning System

ECM103

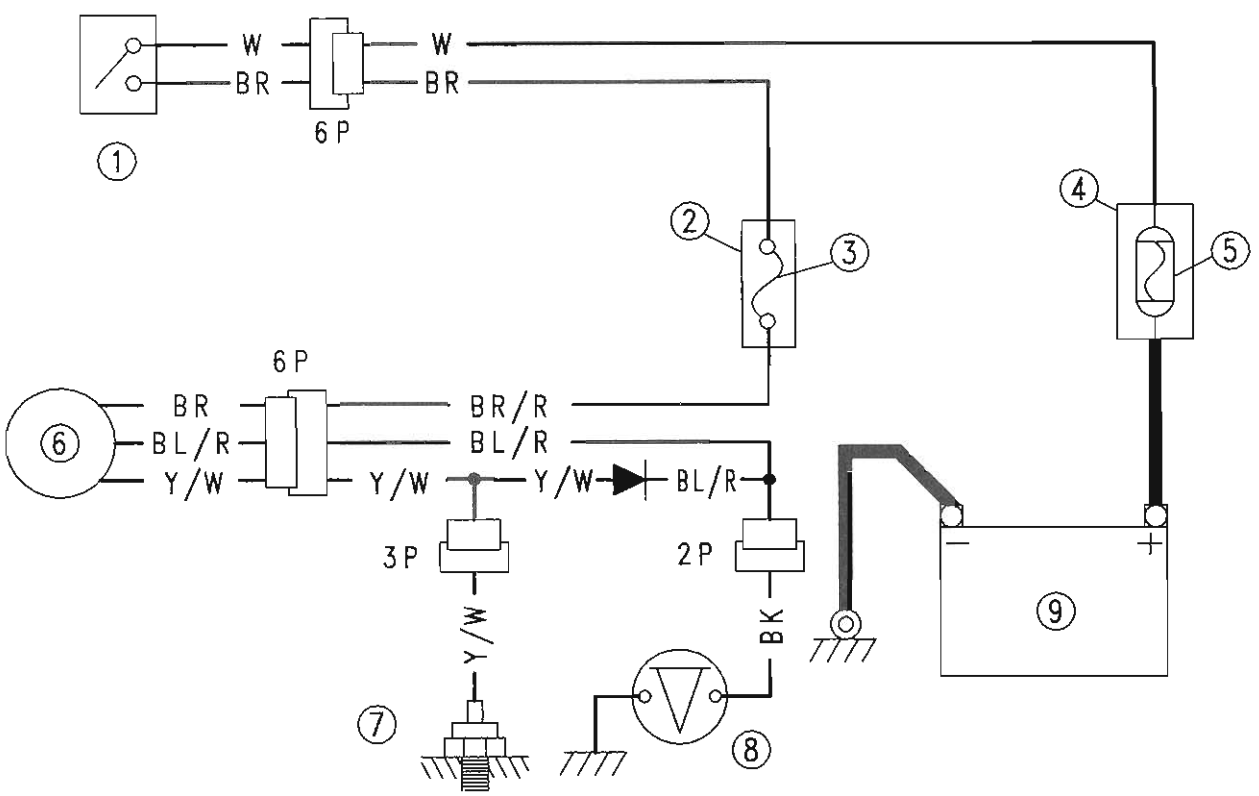

1. Ignition Switch
2. Junction Box
3. Ignition Fuse 10A
4. Starter Relay
5. Main Fuse 30A
6. Warning Light
7. Water Temperature Switch
8. Oil Pressure Switch
9. Battery

Fuel Gauge Operation Inspection

- Remove the fuel tank (see Fuel System chapter).
- Connect the meter connector [A] (6P white) as shown.
- Prepare an auxiliary wire, and check the operation of the gauge.

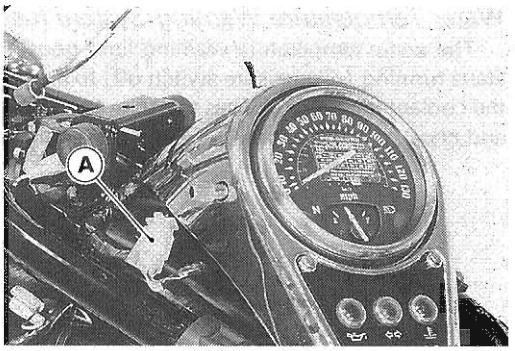

Fuel Gauge Operation Check
Ignition Switch Position: ON
Wire Location: Female 2-pin fuel gauge connector [A] (disconnected)
Results: Gauge should read E when connector wires are opened.
Gauge should read F when connector wires are shorted.

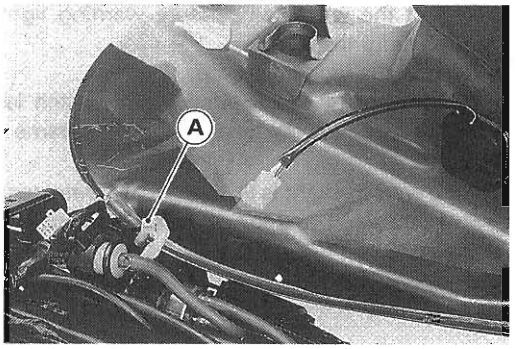

★If the gauge readings are correct, the fuel level sensor is bad. If these readings are not obtained, the trouble is with the gauge and/or wiring.

- Check the fuel gauge circuit wiring (see Wiring Inspection).

★If all wiring and components other than the fuel gauge unit check out good the gauge is defective.

Switches and Sensors

Front Brake Light Switch Inspection (Periodic Inspection)

- Turn on the ignition switch.
- The brake light should go on when the front brake is applied.

★If it does not, replace the switch.

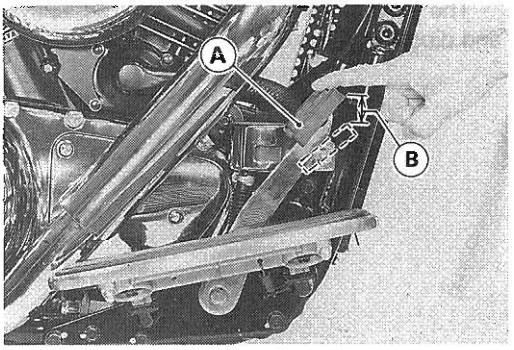

Rear Brake Light Switch Adjustment (Periodic Inspection)

- Check the operation of the rear brake light switch by depressing the brake pedal [A]. The brake light should go on after about **15 mm** of pedal travel [B].

★If it does not, adjust the brake light switch.

- While holding the switch body, turn the adjusting nut to adjust the switch.

Switch Body [A]	Light sooner as the body rises [C]
Adjusting Nut [B]	Light later as the body lowers [D]

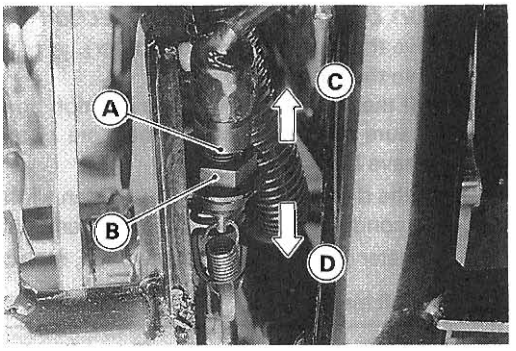

CAUTION

To avoid damaging the electrical connections inside the switch, be sure that the switch body does not turn during adjustment.

Junction Box

The junction box [A] has fuses [B], relays, and diodes. The relays and diodes can not be removed.

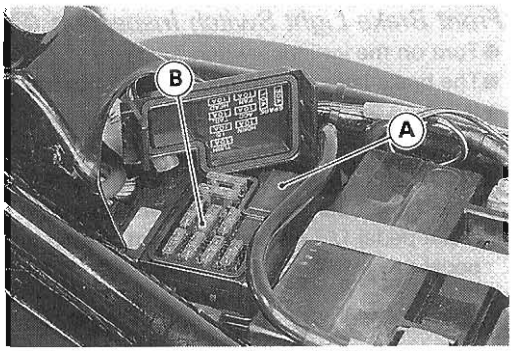

Junction Box Fuse Circuit Inspection

- Remove the seat (see Frame chapter).
- Remove the junction box.
- Pull off the connectors from the junction box.
- Make sure all connector terminals are clean and tight, and none of them have been bent.

★Clean the dirty terminals, and straighten slightly-bent terminals.

- Check conductivity of the numbered terminals with the hand tester.

★If the tester does not read as specified, replace the junction box.

Fuse Circuit Inspection

Tester Connection	Tester Reading (Ω)
1 - 1A	0
1 - 2	0
3A - 4	0
6 - 5	0
6 - 10	0
6 - 7	0
6 - 17	0

Tester Connection	Tester Reading (Ω)
1A - 8	∞
2 - 8	∞
3A - 8	∞
6 - 2	∞
6 - 3A	∞
17 - 3A	∞

Starter Circuit/Headlight Relay Inspection

- Remove the junction box.
- Check conductivity of the following numbered terminals by connecting the hand tester and one 12 V battery to the junction box as shown.

★If the tester does not read as specified, replace the junction box.

Relay Circuit Inspection (with the battery disconnected)

	Tester Connection	Tester Reading (Ω)
Headlight Relay	*7 – 8	∞
	*7 – 13	∞
	(+) (–) *13 – 9	Not ∞ **

	Tester Connection	Tester Reading (Ω)
Starter Circuit Relay	9 – 11	∞
	12 – 13	∞
	(+) (–) 13 – 11	∞
	(+) (–) 12 – 11	Not ∞ **

(*): US, Canada, and Australia Models only
(**): The actual reading varies with the hand tester used.
(+): Apply tester positive lead.
(–): Apply tester negative lead.

Relay Circuit Inspection (with the battery connected)

	Battery Connection (+) (−)	Tester Connection	Tester Reading (Ω)
Headlight Relay	*9 − 13	*7 − 8	0
Starter Circuit Relay	11 − 12	(+) (−) 13 − 11	Not ∞ **

(*): US, Canada, and Australia Models only
(**): The actual reading varies with the hand tester used.
(+): Apply tester positive lead.
(−): Apply tester negative lead.

Diode Circuit Inspection

- Remove the junction box.
- Check conductivity of the following pairs of terminals.

Diode Circuit Inspection

Tester Connection	*13-8, *13-9, 12-11, 12-14, 15-14, 16-14

(*): US, Canada, and Australia Models only

★The resistance should be low in one direction and more than ten times as much in the other direction. If any diode shows low or high in both directions, the diode is defective and the junction box must be replaced.

NOTE

○*The actual meter reading varies with the meter used and the individual diodes, but generally speaking, the lower reading should be from zero to one half the scale.*

Junction Box Internal Circuit (US, Canada, and Australia)

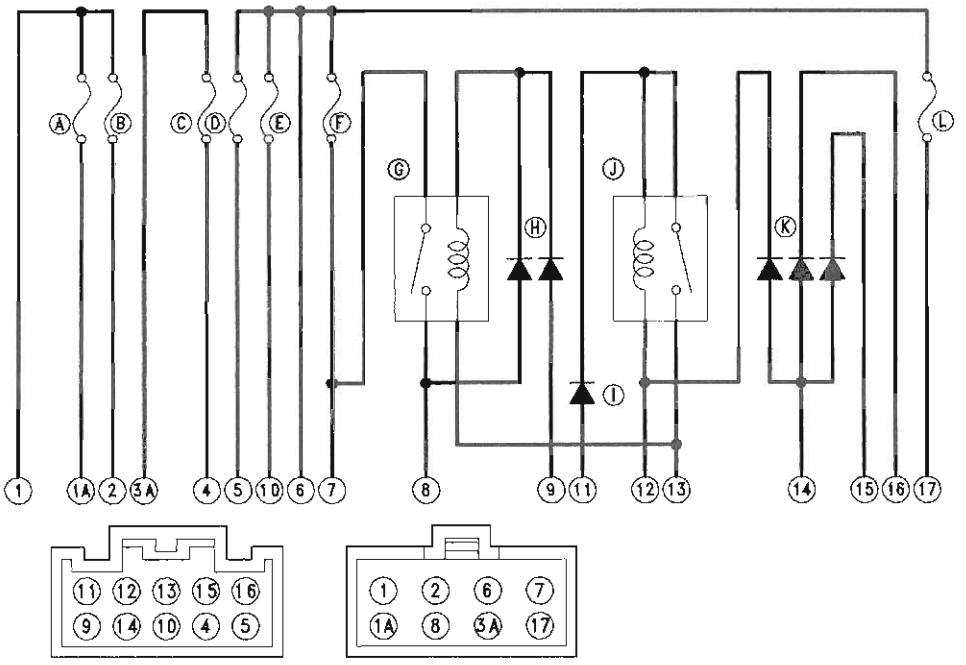

Junction Box Internal Circuit (Other than US, Canada, and Australia)

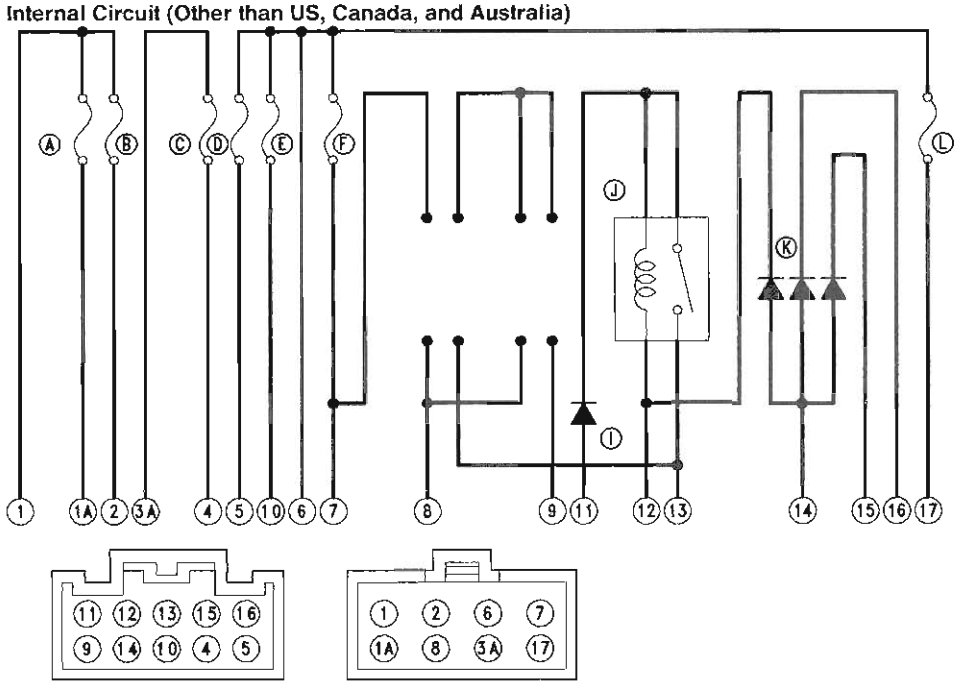

A. Accessory Fuse 10A
B. Fan Fuse 10A
C. Turn Signal Fuse 10A
D. Horn Fuse 10A
E. Ignition Fuse 10A
F. Headlight Fuse 10A
G. Headlight Relay
H. Headlight Diodes
I. Starter Diode
J. Starter Circuit Relay
K. Interlock Diodes
L. Taillight Fuse 10A

Fuse

Main Fuse Removal

- Remove the right side cover (see Frame chapter).
- Pull out the main fuse [A] from the starter relay with needle nose pliers.

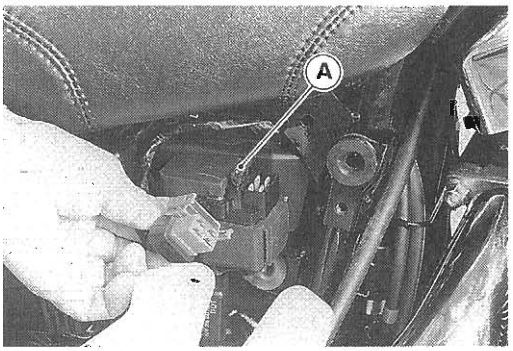

Junction Box Fuse Removal

- Remove the front seat (see Frame chapter).
- Unlock the hook to lift up the lid [A].
- Pull the fuses [B] straight out of the junction box with needle pliers.

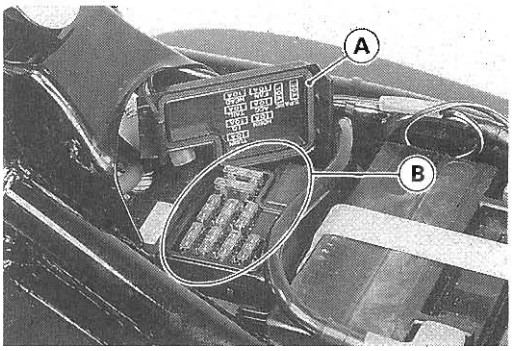

Fuse Installation

- If a fuse fails during operation, inspect the electrical system to determine the cause, and then replace it with a new fuse of proper amperage.
- Install the junction box fuses on the original position as specified on the lid.

Fuse Inspection

- Remove the fuse (see Fuse Removal).
- Inspect the fuse element.
- ★If it is blown out, replace the fuse. Before replacing a blown fuse, always check the amperage in the affected circuit. If the amperage is equal to or grater than the fuse rating, check the wiring and related components for a short circuit.

Housing [A] Terminals [C]
Fuse Element [B] Blown Element [D]

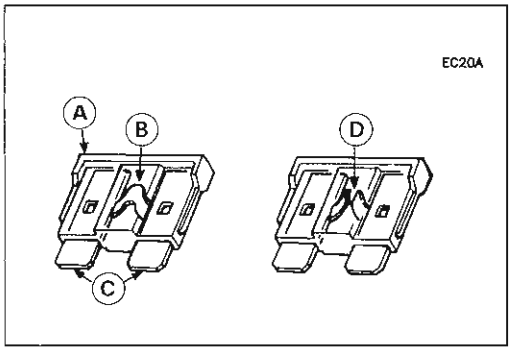

CAUTION

When replacing a fuse, be sure the new fuse matches the specified fuse rating for that circuit. Installation of a fuse with a higher rating may cause damage to wiring and components.

Appendix

Table of Contents

Troubleshooting Guide 16-2
General Lubrication 16-3
  Lubrication (Periodic Maintenance) 16-3
Nut, Bolt, and Fastener Tightness 16-4
  Tightness Inspection (Periodic Inspection) 16-4
  Unite Conversion Table ..... *

Troubleshooting Guide

Refer to pp. 16-4 ~ 16-7 of the Base Manual, noting the following.

Engine Doesn't Start, Starting Difficulty:

Compression low:
Compression release cam (K.A.C.R.) sticks open
(Engine stalls when moving off)

Poor Running at Low Speed:

Compression low:
Compression release cam (K.A.C.R.) sticks open
(Engine stalls when moving off)
HLA seizure

Poor Running or No Power at High Speed:

Compression low:
Compression release cam (K.A.C.R.) sticks open
(Engine stalls when moving off)
HLA seizure

Overheating:

Compression high:
Compression release cam (K.A.C.R.) sticks close

Water temperature warning system incorrect:
Water temperature warning light broken
Water temperature switch broken

Abnormal Engine Noise:

Valve noise:
HLA aeration due to low oil level

Battery Discharged:

Charge insufficient
Battery faulty (too low terminal voltage)
Load excessive (e.g;, bulb of excessive wattage)
Ignition switch trouble
Alternator trouble
Wiring faulty

Battery Overcharged:

Alternator trouble
Regulator/rectifier trouble
Battery faulty

General Lubrication

Lubrication (Periodic Maintenance)

- Before lubricating each part, clean off any rusty spots with rust remover and wipe off any grease, oil, dirt, or grime.
- Lubricate the points listed below with indicated lubricant.

NOTE

○ *Perform the general lubrication in accordance with the Periodic Maintenance Chart or whenever the vehicle has been operated under wet or rainy conditions, or especially after using a high-pressure water spray.*

Pivots: Lubricate with Motor Oil.

Sidestand
Rear Brake Rod Joint

Points: Lubricate with Grease.

Throttle Inner Cable Lower Ends [A]
Speedometer Inner Cable*
Brake Pedal
Clutch Lever (Apply silicone grease)
Brake Lever (Apply silicone grease)
(*): Grease the lower part of the inner cable sparingly.

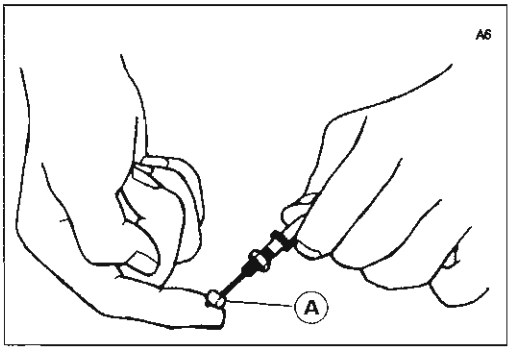

Cables: Lubricate with Cable Lubricant.

Choke Cable
Throttle Cables

- Lubricate the cables by seeping the oil between the cable and housing.

○ The cable may be lubricated by using a pressure cable luber [A] with an aerosol cable lubricant [B].

Special Tool – Pressure Cable Luber: K56019-021

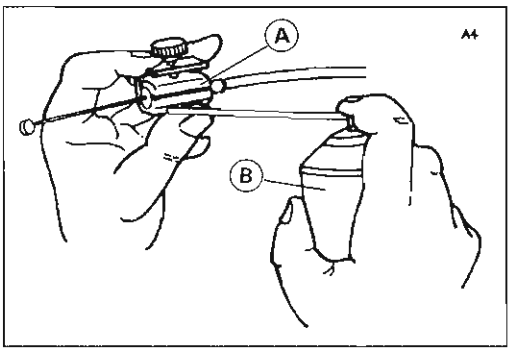

- With the cable disconnected at the both ends, the cable should move freely [A] within the cable housing.

★ If cable movement is not free after lubricating, if the cable is frayed, or if the cable housing is kinked, replace the cable.

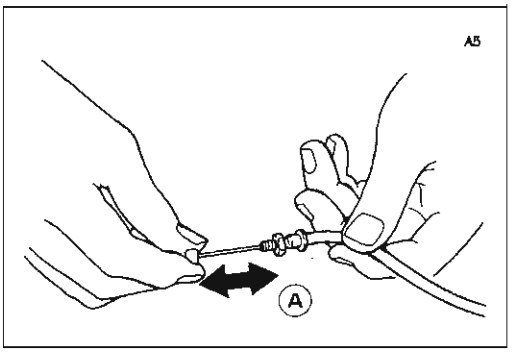

Nut, Bolt, and Fastener Tightness

Tightness Inspection (Periodic Inspection)

● Check the tightness of the bolts and nuts listed here accordance with the Periodic Maintenance Chart. Also, check to see that each cotter pin is in place and in good condition.

NOTE

○ *For the engine fasteners, check the tightness of them when the engine is cold (at room temperature).*

★ If there are loose fasteners, retorque them to the specified torque following the specified tightening sequence. Refer to the Torque and Locking Agent section of the General Information chapter for torque specifications. For each fastener, first loosen it by 1/2 turn, then tighten it.

★ If cotter pins are damaged, replace them with new ones.

Nut, Bolt and Fastener to be checked

Wheels:
- Front Axle Nut
- Front Axle Clamp Bolts
- Rear Axle Nut Cotter Pin
- Rear Axle Nut

Final Drive
- Final Gear Case Mounting Nuts

Brakes:
- Front Master Cylinder Clamp Bolts
- Caliper Mounting Bolts
- Rear Master Cylinder Mounting Bolts
- Rear Caliper Holder Bolt
- Brake Lever Pivot Nut
- Brake Pedal Bolt
- Brake Rod Joint Cotter Pin

Suspension:
- Front Fork Clamp Bolts
- Front Fender Mounting Bolts
- Rear Shock Absorber Mounting Nuts
- Swingarm Pivot Shaft

Steering:
- Stem Head Bolt
- Handlebar Clamp Bolts

Engine:
- Throttle Cable Adjuster Locknuts
- Engine Mounting Bolts and Nuts
- Shift Pedal Bolts
- Muffler Mounting Bolts and Nuts
- Exhaust Pipe Holder Nuts
- Clutch Master Cylinder Clamp Bolts
- Clutch Lever Pivot Nut
- Radiator Mounting Bolts
- Clutch Master Cylinder Clamps

Others:
- Sidestand Bolt and Nut
- Footpeg Mounting Bolts
- Downtube Bolts (Right)

MODEL APPLICATION

Year	Model	Beginning Frame No.
1996	VN1500-D1	JKBVNAD1□TA000001 (U.S., Canada, Australia), VNT50D-000001 (Germany), or VNT50A-040001 (General)

□ : This digit in the frame number changes from one machine to another.

Kawasaki
KAWASAKI HEAVY INDUSTRIES, LTD.
Consumer Products Group

Part No. 99924-1191-51

Printed in Japan