Kawasaki

MICRO-K

PARTS CATALOG

Year & Model	**'16 ZX1000SGF**	**'16 ZX1000SGFA**	**'16 ZX1000SGFB**
Color	1. METALLIC MATTE CARBON GRAY (51B)	1. LIME GREEN (777)	1. FLAT EBONY TYPE2 (45L)
VIN No. Range	JKAZXCS1√GA000001 ~	JKAZXCS1√GA000001 ~	JKAZXCS1√GA000001 ~
Engine No. Range	ZXT00JE000001 ~	ZXT00JE000001 ~	ZXT00JE000001 ~

'16 ZX1000 SGF/SGFA/SGFB
(Ninja ZX-10R ABS)

Publications.....A-2
Model Identification..... A-4
Engine..... B-1
Chassis..... E-1

© Kawasaki Heavy Industries, Ltd. 2015

Engine No. Location:
Upper crankcase, right side

Year & Model	Owner's Manual	A&P Manual		Service Manual		Microfiche
		General	Supplement	Basic	Supplement	
2016 ZX1000SGF	99986-1884			99924-1509-01		99912-0030-01
2016 ZX1000SGFA	See above			See above		See above
2016 ZX1000SGFB	See above			See above		See above

PARTS LIST INFORMATION

This parts catalog lists parts and sub-assemblies provided as spare parts.
When it becomes necessary to replace parts always use KAWASAKI GENUINE PARTS. Strict inspection assures quality and performance of KAWASAKI GENUINE PARTS.

1. HOW TO PLACE AN ORDER FOR PART

When ordering parts be sure to use the catalog for the correct model and year of the vehicle. Include the following items exactly as listed in this catalog on your parts order.

Part Number
Part Name
Color Code
Specify the color using both color code (which is part of the part number) and name when ordering painted parts.
Example: 51001-5074-H8 TANK-COMP-FUEL,EBONY

Parts not shown disassembled in the illustrations of this parts catalog are not sold separately; only the complete units or next higher assemblies illustrated, are supplied, as spare parts.

2. EXPLANATION OF PARTS CATALOG FORMAT

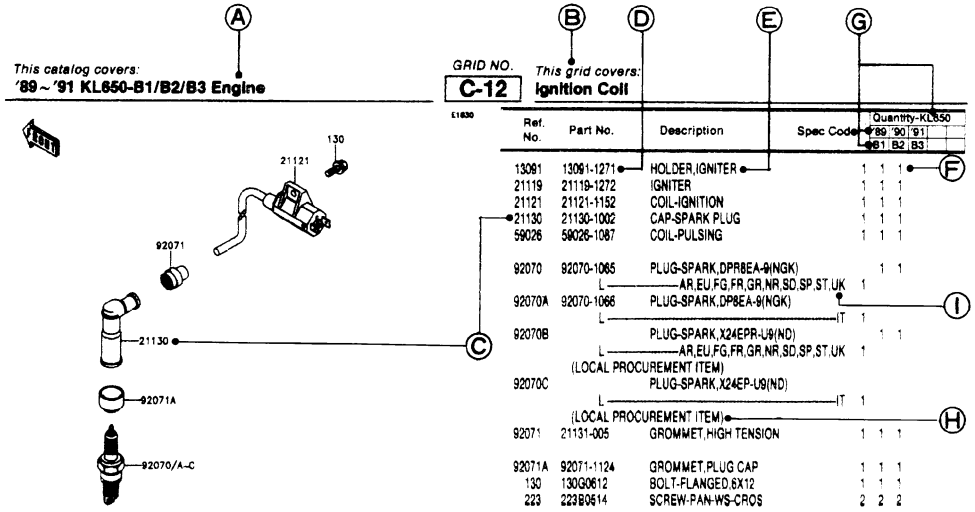

A. Year & Model Title
This title describes the year(s) and model(s) contained in this catalog.

B. Part Group Title
A representative name for the group of parts illustrated on this page.

C. Referernce Number
The reference number is listed on the illustration and parts list. It is the link between the illustration and the parts list.

D. Part Number
The number assigned to a part for the purpose of parts ordering.

1) Part Number (New Structure)
00000 – 0000 – 00 or 00000 – 0000 – 000

(Old Structure)
00000 – 000 – 00

Color Code
Production Number
Function Code

2) Standard Hardware Number
000 0 0000

Size Number
Material or Surface Treatment Code (Alphabet)
Item Number

E. Description
Describes the main function of the part and includes data such as size, number of teeth, color,etc.

List of Abbreviations

(+)	Plus	HEX	Hexagonal	REF	Reference
(-)	Minus	ID =	Inside Diameter	RH	Right Hand
&	And	KPH	Killometers Per Hour	RPM	Revolutions Per Minute
2ND	Second	L	Link	RR	Rear
3RD	Third	L =	Length	STD	Standard
4TH	Fourth	L/	Less	T	Teeth
AR	As Required	LH	Left Hand	T =	Thickness
ASSY	Assembly	LWR	Lower	U/S	Under Size
CA	Cut Away	MM	Millimeter	UPP	Upper
CNT	Center	MPH	Miles Per Hour	V	Volt
COMP	Complete	NA	Not Available	W	Watt
D	Degree	O/S	Over Size	W/	With
FR	Front	OD =	Outside Diameter	WD	With Decal
G	Gram	PR	Ply Rating	WOD	Without Decal

F. Quantity
Specifies how many of a part are required at the indicated position on the illustration.

G. Year & Model
Indicates which parts are used for a specific vehicle year and model.

H. Additional Information
Additional Information is shown as follows:
1) (OPTION) Part is not installed as original equipment, but is available separately.
2) (RACING USE ONLY) Part is to be used for closed course racing only on this vehicle.
3) (OFF-ROAD USE ONLY) Part is for off-road use only this vehicle.
4) (LOCAL PROCUREMENT ITEM) Part is obtainable from a local source. No part number is listed.
5) Technical relationships between old part numbers and new part numbers are shown as follows:
INTERCHANGE - Old part or new part can be used.
SUBSTITUTE - New part replaces old part. Old part cannot be used in place of new part.
6) Mid-Year part number changes on a vehicle are noted by engine or frame number references.

(- KZ400DE001181)	Affected units are from beginning of model year production up to and including this engine number.
(KZ400D-008111 -)	Affected units are from this frame number to the end of model year production.
(KZ400DE008181 - KZ400DE018888)	Affected units are in this engine number range.

I. Specification Code
Identifies the specification of the vehicle for which the part applies. If no spec code is listed, that means the part is used for all specifications.

Spec Code	Specification	'16 SGF	'16 SGFA	'16 SGFB		
AS	Australia	O	O	O		

ZX1000SGF

Left Side View

Right Side View

ZX1000SGFA

Left Side View

Right Side View

ZX1000SGFB

Left Side View

Right Side View

'16 ZX1000SGF

O : Applicable ×: Not applicable

Color: METALLIC MATTE CARBON GRAY (51B) (1)

Part No.	Description	Spec.Code AS												
11065-0958-50Y	CAP,G.B.GREEN	O												
14092-0786-51B	COVER,TANK,CNT,M.M.C.GRAY	O												
14092-0788-51B	COVER,TANK,RH,M.M.C.GRAY	O												
14093-0342-51B	COVER,TANK,LH,M.M.C.GRAY	O												
32043-0604-18R	BRACKET-STAND,F.S.BLACK	O												
32160-0506-18R	FRAME-COMP,RR,LH,F.S.BLACK	O												
32160-0507-18R	FRAME-COMP,RR,RH,F.S.BLACK	O												
34024-0137-18R	STAND-SIDE,F.S.BLACK	O												
35004-0342-51B	FENDER-FRONT,M.M.C.GRAY	O												
35063-0697-18R	STAY,FR STEP,LH,F.S.BLACK	O												
35063-0700-18R	STAY,RR STEP,RH,F.S.BLACK	O												
35063-0852-18R	STAY,RR STEP,LH,F.S.BLACK	O												
35063-1331-18R	STAY,FR STEP,RH,F.S.BLACK	O												
36001-0640-51B	COVER-SIDE,TAIL,LH,M.M.C.GRAY	O												
36001-0641-51B	COVER-SIDE,TAIL,RH,M.M.C.GRAY	O												
36041-0024-51B	COVER-TAIL,M.M.C.GRAY	O												
41073-0677-18F	WHEEL-ASSY,FR,G.BLACK	O												
41073-0688-18F	WHEEL-ASSY,RR,G.BLACK	O												
41080-0648-18U	DISC,BLACK/BLACK	O												
43080-0097-DJ	CALIPER-SUB-ASSY,RR,BLACK	O												
43080-0172-51J	CALIPER-SUB-ASSY,FR,LH,GRAY	O												
43080-0173-51J	CALIPER-SUB-ASSY,FR,RH,GRAY	O												
44008-0082-11G	PIPE-FORK OUTER,GRAY	O												
44013-0284-58Y	PIPE-FORK INNER,LH,GRAY	O												
44013-0285-58Y	PIPE-FORK INNER,RH,GRAY	O												
44071-1207-58T	DAMPER-ASSY,LH,GRAY	O												
44071-1208-58T	DAMPER-ASSY,RH,GRAY	O												
45014-0515-52J	SHOCKABSORBER,GREEN/GRAY	O												
51089-5418-51B	TANK-COMP-FUEL,M.M.C.GRAY	O												
53003-0209-MA	LEATHER,FR SEAT,BLACK	O												

'16 ZX1000SGF

O : Applicable ×: Not applicable

Color: METALLIC MATTE CARBON GRAY (51B) (2)

Part No.	Description	Spec.Code AS
53003-0420-MA	LEATHER,RR SEAT,BLACK	O
53065-0038-51B	COVER SEAT,M.M.C.GRAY	O
53066-0506-12Y	SEAT-ASSY,RR,BLACK/BLACK	O
53066-0521-MA	SEAT-ASSY,FR,BLACK	O
55028-0336-6Z	COWLING,SIDE,FR,LH,F.BLACK	O
55028-0337-6Z	COWLING,SIDE,FR,RH,F.BLACK	O
55028-0572-51B	COWLING,UPP,M.M.C.GRAY	O
55028-0576-6Z	COWLING,INNER,LH,F.BLACK	O
55028-0577-6Z	COWLING,INNER,RH,F.BLACK	O
55028-0585-51B	COWLING,SIDE,LH,M.M.C.GRAY	O
55028-0586-51B	COWLING,SIDE,RH,M.M.C.GRAY	O
55057-5080-51B	COWLING,SIDE,UPP,LH,M.M.C.GRAY	O
55057-5081-51B	COWLING,SIDE,UPP,RH,M.M.C.GRAY	O
99994-0667-51B	KIT,SINGLE SEAT COVER,GRAY	O

'16 ZX1000SGFA

O : Applicable ×: Not applicable

Color: LIME GREEN (777) (1)

Part No.	Description	Spec.Code AS												
11065-0958-10B	CAP,P.RED	O												
14093-5109-H8	COVER,TANK,CNT,EBONY	O												
14093-5110-H8	COVER,TANK,RH,EBONY	O												
14093-5111-H8	COVER,TANK,LH,EBONY	O												
32043-0604-18R	BRACKET-STAND,F.S.BLACK	O												
32160-0506-18R	FRAME-COMP,RR,LH,F.S.BLACK	O												
32160-0507-18R	FRAME-COMP,RR,RH,F.S.BLACK	O												
34024-0137-18R	STAND-SIDE,F.S.BLACK	O												
35004-0342-777	FENDER-FRONT,L.GREEN	O												
35063-0697-18R	STAY,FR STEP,LH,F.S.BLACK	O												
35063-0700-18R	STAY,RR STEP,RH,F.S.BLACK	O												
35063-0852-18R	STAY,RR STEP,LH,F.S.BLACK	O												
35063-1331-18R	STAY,FR STEP,RH,F.S.BLACK	O												
36001-0640-777	COVER-SIDE,TAIL,LH,L.GREEN	O												
36001-0641-777	COVER-SIDE,TAIL,RH,L.GREEN	O												
36041-5113-777	COVER-TAIL,L.GREEN	O												
41073-0677-18F	WHEEL-ASSY,FR,G.BLACK	O												
41073-0688-18F	WHEEL-ASSY,RR,G.BLACK	O												
41080-0648-18U	DISC,BLACK/BLACK	O												
43080-0097-DJ	CALIPER-SUB-ASSY,RR,BLACK	O												
43080-0172-51J	CALIPER-SUB-ASSY,FR,LH,GRAY	O												
43080-0173-51J	CALIPER-SUB-ASSY,FR,RH,GRAY	O												
44008-0082-499	PIPE-FORK OUTER,BLACK	O												
44013-0284-58X	PIPE-FORK INNER,LH,BLACK	O												
44013-0285-58X	PIPE-FORK INNER,RH,BLACK	O												
44071-1207-58S	DAMPER-ASSY,LH,BLACK	O												
44071-1208-58S	DAMPER-ASSY,RH,BLACK	O												
45014-0515-52G	SHOCKABSORBER,BLACK/GRAY	O												
51089-5419-H8	TANK-COMP-FUEL,EBONY	O												
53003-0209-MA	LEATHER,FR SEAT,BLACK	O												

'16 ZX1000SGFA

O : Applicable ×: Not applicable

Color: LIME GREEN (777) (2)

Part No.	Description	Spec.Code AS												
53003-0420-MA	LEATHER,RR SEAT,BLACK	O												
53065-0038-777	COVER SEAT,L.GREEN	O												
53066-0506-12Y	SEAT-ASSY,RR,BLACK/BLACK	O												
53066-0521-MA	SEAT-ASSY,FR,BLACK	O												
55028-0336-6Z	COWLING,SIDE,FR,LH,F.BLACK	O												
55028-0337-6Z	COWLING,SIDE,FR,RH,F.BLACK	O												
55028-0576-6Z	COWLING,INNER,LH,F.BLACK	O												
55028-0577-6Z	COWLING,INNER,RH,F.BLACK	O												
55057-5096-777	COWLING,UPP,L.GREEN	O												
55057-5097-H8	COWLING,SIDE,UPP,LH,EBONY	O												
55057-5098-H8	COWLING,SIDE,UPP,RH,EBONY	O												
55057-5109-777	COWLING,SIDE,LH,L.GREEN	O												
55057-5112-777	COWLING,SIDE,RH,L.GREEN	O												
99994-0667-777	KIT,SINGLE SEAT COVER,L.GREEN	O												

'16 ZX1000SGFB

O : Applicable ×: Not applicable

Color: FLAT EBONY TYPE2 (45L) (1)

Part No.	Description	Spec.Code AS												
11065-0958-10B	CAP,P.RED	O												
14092-0786-45L	COVER,TANK,CNT,F.EBONY	O												
14092-0788-45L	COVER,TANK,RH,F.EBONY	O												
14093-0342-45L	COVER,TANK,LH,F.EBONY	O												
32043-0604-18R	BRACKET-STAND,F.S.BLACK	O												
32160-0506-18R	FRAME-COMP,RR,LH,F.S.BLACK	O												
32160-0507-18R	FRAME-COMP,RR,RH,F.S.BLACK	O												
34024-0137-18R	STAND-SIDE,F.S.BLACK	O												
35004-0342-45L	FENDER-FRONT,F.EBONY	O												
35063-0697-18R	STAY,FR STEP,LH,F.S.BLACK	O												
35063-0700-18R	STAY,RR STEP,RH,F.S.BLACK	O												
35063-0852-18R	STAY,RR STEP,LH,F.S.BLACK	O												
35063-1331-18R	STAY,FR STEP,RH,F.S.BLACK	O												
36001-0640-45L	COVER-SIDE,TAIL,LH,F.EBONY	O												
36001-0641-45L	COVER-SIDE,TAIL,RH,F.EBONY	O												
36041-5116-45L	COVER-TAIL,F.EBONY	O												
41073-0677-18F	WHEEL-ASSY,FR,G.BLACK	O												
41073-0688-18F	WHEEL-ASSY,RR,G.BLACK	O												
41080-0648-18U	DISC,BLACK/BLACK	O												
43080-0097-DJ	CALIPER-SUB-ASSY,RR,BLACK	O												
43080-0172-51J	CALIPER-SUB-ASSY,FR,LH,GRAY	O												
43080-0173-51J	CALIPER-SUB-ASSY,FR,RH,GRAY	O												
44008-0082-499	PIPE-FORK OUTER,BLACK	O												
44013-0284-58X	PIPE-FORK INNER,LH,BLACK	O												
44013-0285-58X	PIPE-FORK INNER,RH,BLACK	O												
44071-1207-58S	DAMPER-ASSY,LH,BLACK	O												
44071-1208-58S	DAMPER-ASSY,RH,BLACK	O												
45014-0515-52G	SHOCKABSORBER,BLACK/GRAY	O												
51089-5421-45L	TANK-COMP-FUEL,F.EBONY	O												
53003-0209-MA	LEATHER,FR SEAT,BLACK	O												

'16 ZX1000SGFB

O : Applicable ×: Not applicable

Color: FLAT EBONY TYPE2 (45L) (2)

Part No.	Description	Spec.Code AS												
53003-0420-MA	LEATHER,RR SEAT,BLACK	O												
53065-0038-45L	COVER SEAT,F.EBONY	O												
53066-0506-12Y	SEAT-ASSY,RR,BLACK/BLACK	O												
53066-0521-MA	SEAT-ASSY,FR,BLACK	O												
55028-0336-6Z	COWLING,SIDE,FR,LH,F.BLACK	O												
55028-0337-6Z	COWLING,SIDE,FR,RH,F.BLACK	O												
55028-0576-6Z	COWLING,INNER,LH,F.BLACK	O												
55028-0577-6Z	COWLING,INNER,RH,F.BLACK	O												
55057-5104-45L	COWLING,UPP,F.EBONY	O												
55057-5105-45L	COWLING,SIDE,UPP,LH,F.EBONY	O												
55057-5106-45L	COWLING,SIDE,UPP,RH,F.EBONY	O												
55057-5107-45L	COWLING,SIDE,LH,F.EBONY	O												
55057-5110-45L	COWLING,SIDE,RH,F.EBONY	O												
99994-0667-45L	KIT,SINGLE SEAT COVER,F.EBONY	O												

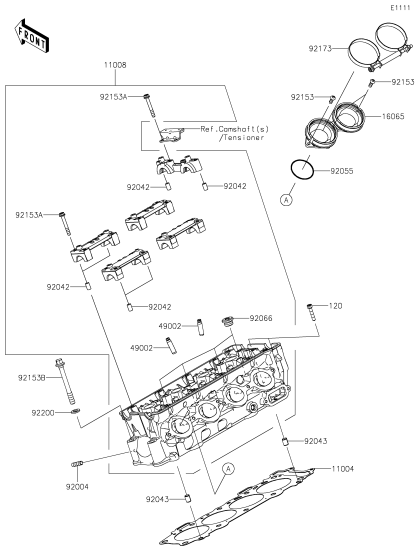

B-3 **Cylinder Head**

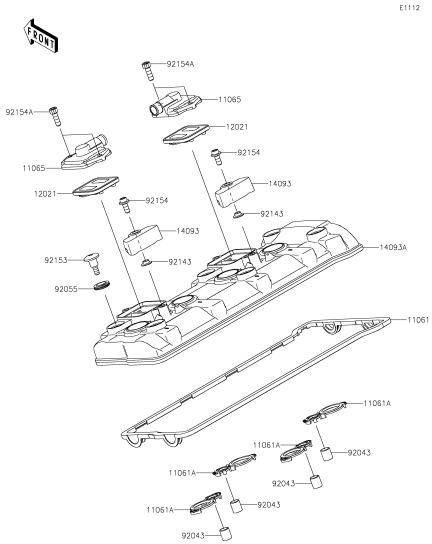

B-4 **Cylinder Head Cover**

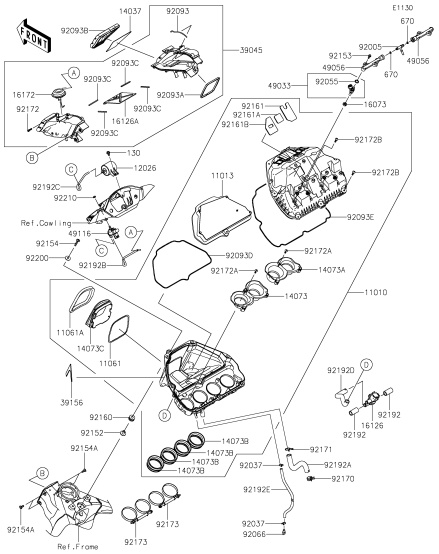

B-5 **Air Cleaner(1/2)**

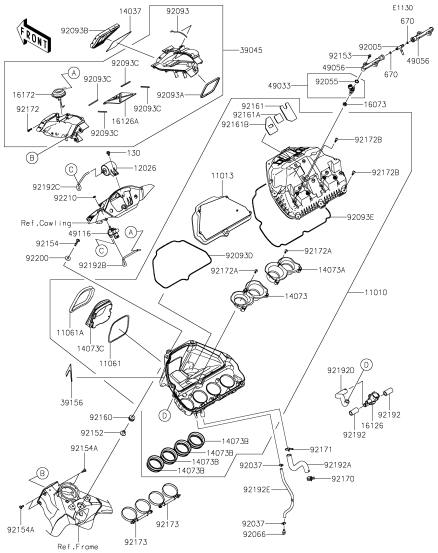

B-6 **Air Cleaner(2/2)**

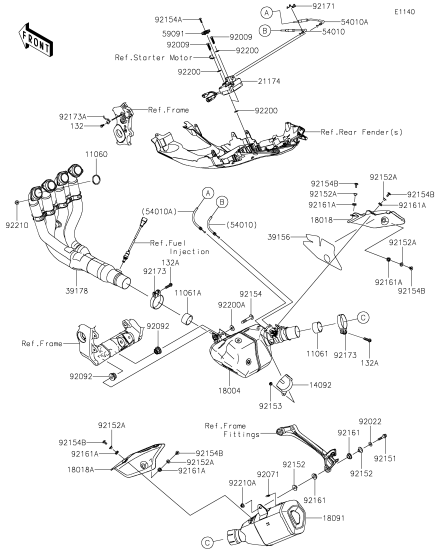

B-7 **Muffler(s)**

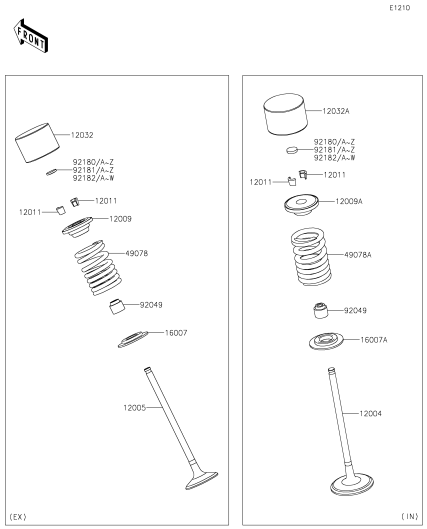

B-8 **Valve(s)(1/3)**

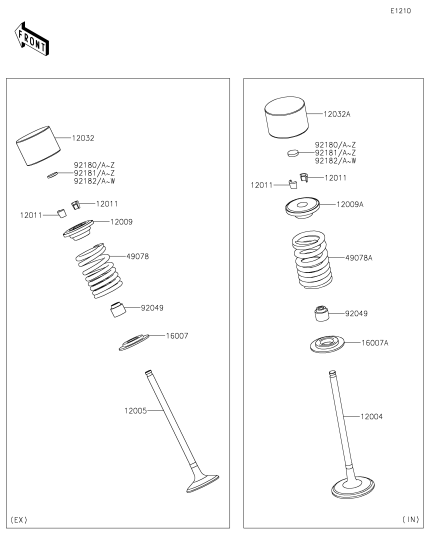

B-9 **Valve(s)(2/3)**

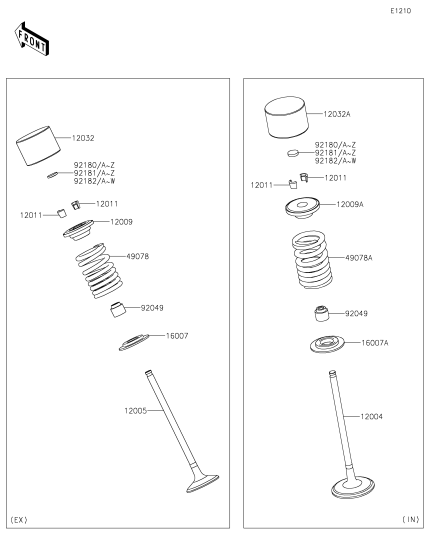

B-10 **Valve(s)(3/3)**

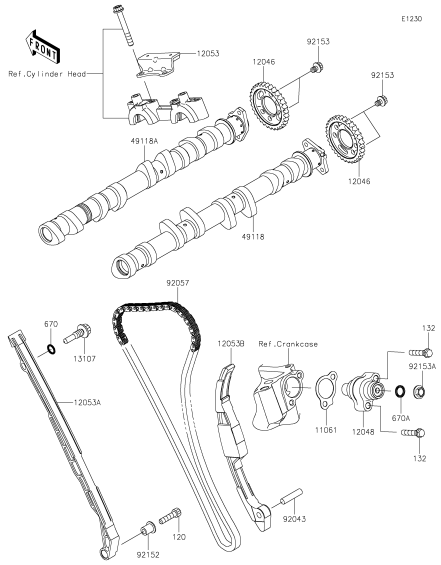

B-11 **Camshaft(s)/Tensioner**

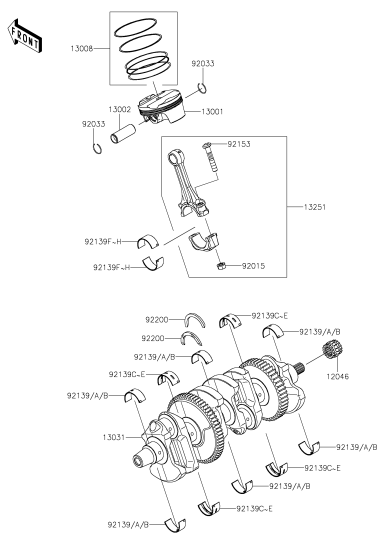

B-12 **Crankshaft/Piston(s)**

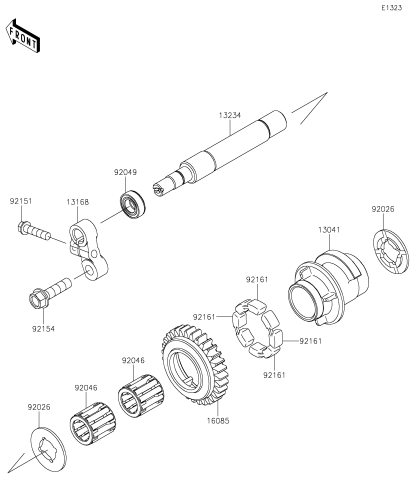

B-13 **Balancer**

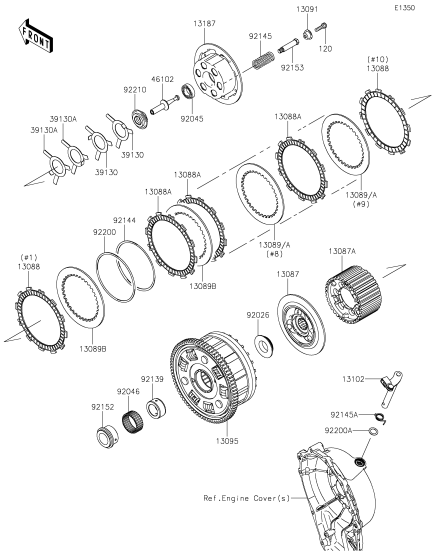

B-14 **Clutch**

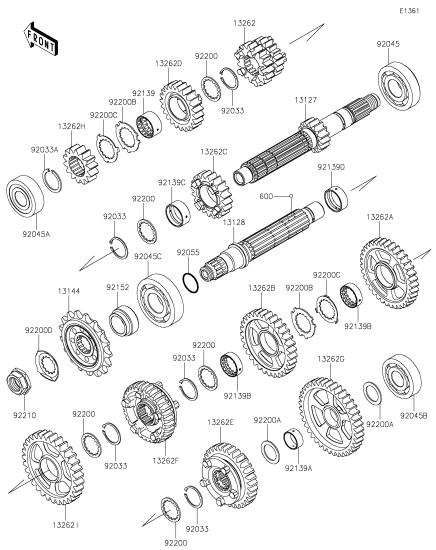

C-3 **Transmission**

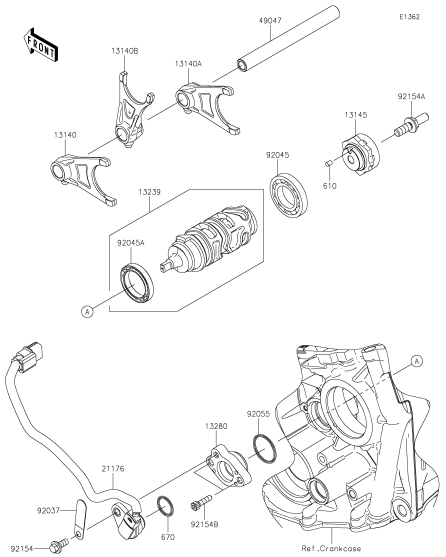

C-4 **Gear Change Drum/Shift Fork(s)**

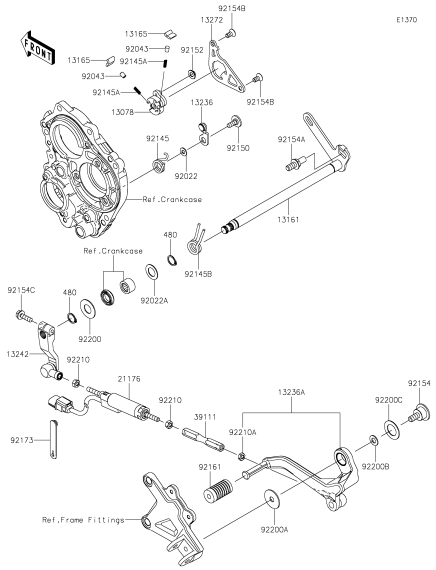

C-5 **Gear Change Mechanism**

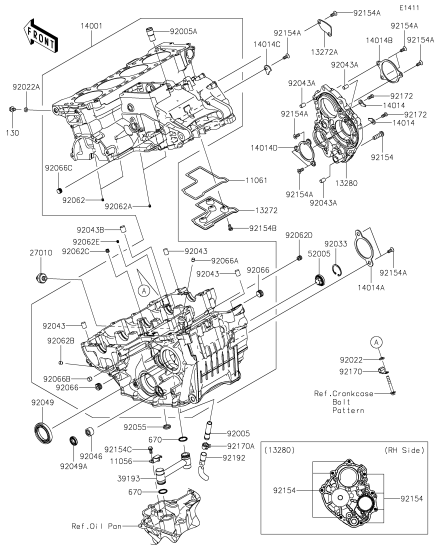

C-6 **Crankcase(1/2)**

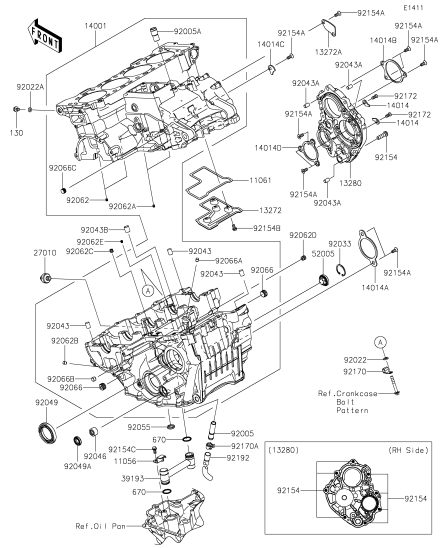

C-7 **Crankcase(2/2)**

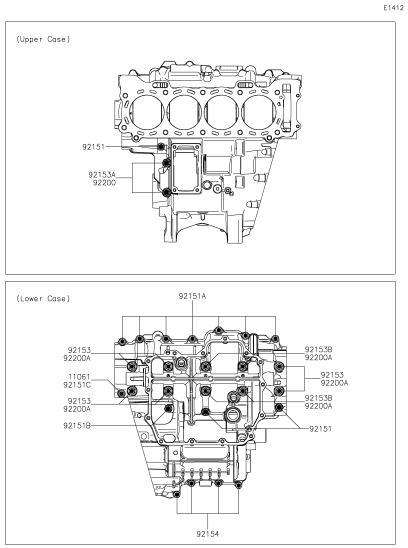

C-8 **Crankcase Bolt Pattern**

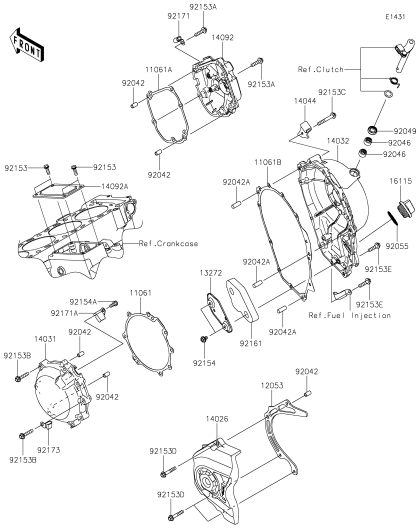

C-9 **Engine Cover(s)**

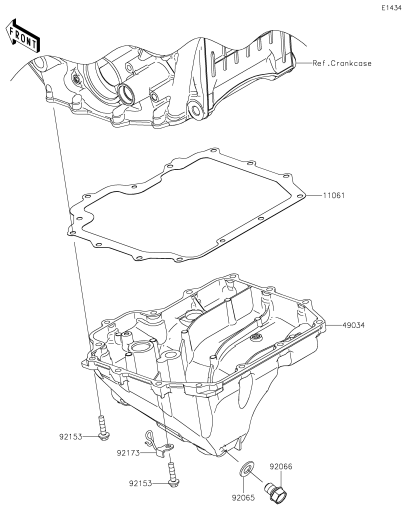

C-10 **Oil Pan**

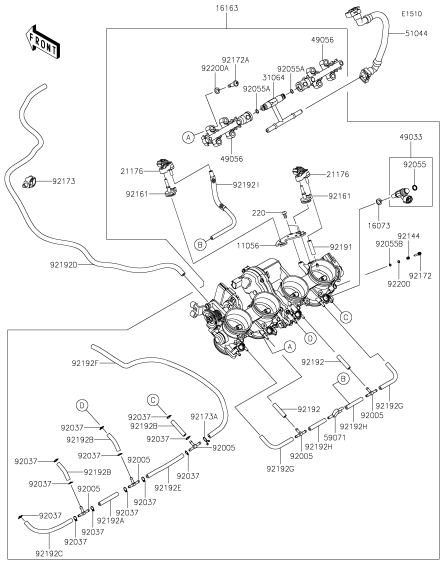

C-11 **Throttle**

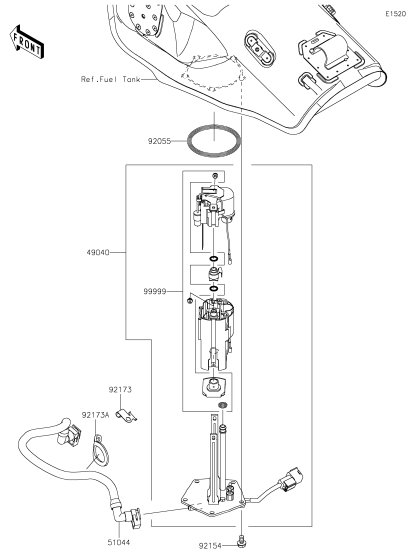

C-12 **Fuel Pump**

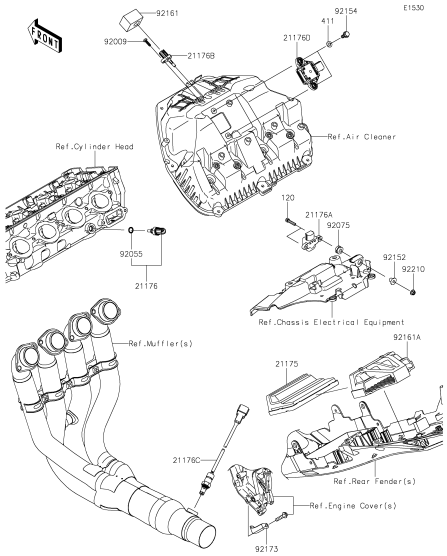

C-13 **Fuel Injection**

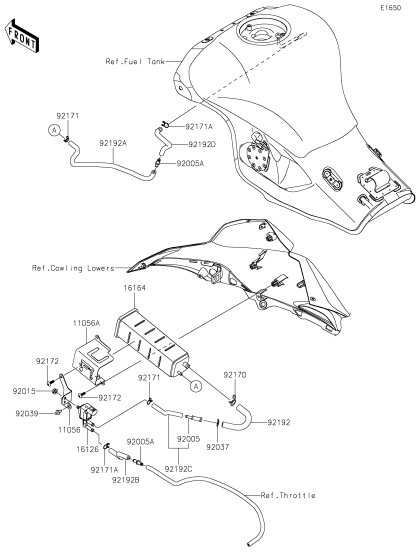

C-14 **Fuel Evaporative System**

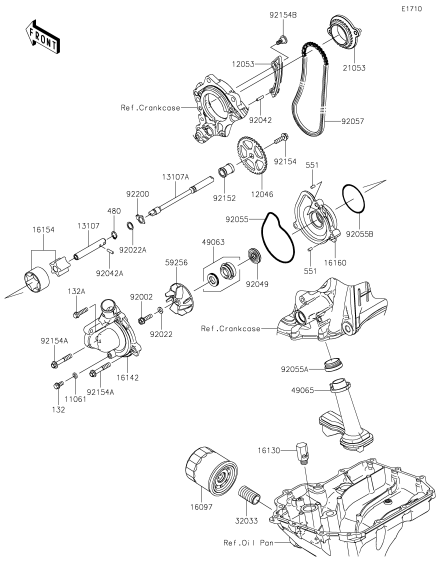

D-3 **Oil Pump**

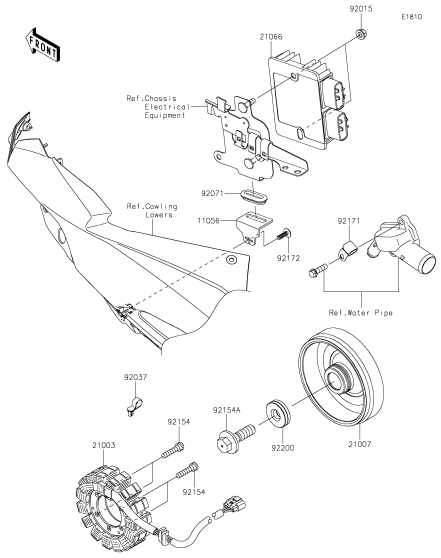

D-4 **Generator**

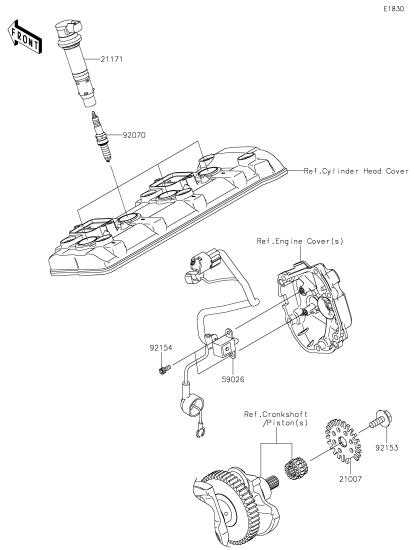

D-5 **Ignition System**

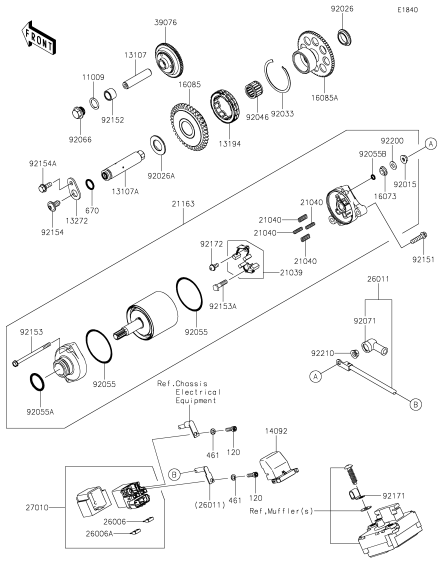

D-6 **Starter Motor**

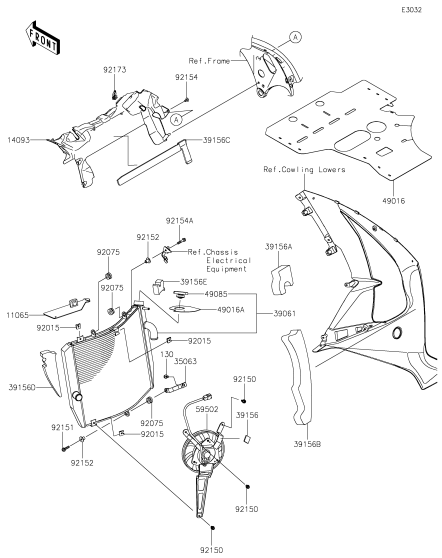

D-7 **Radiator**

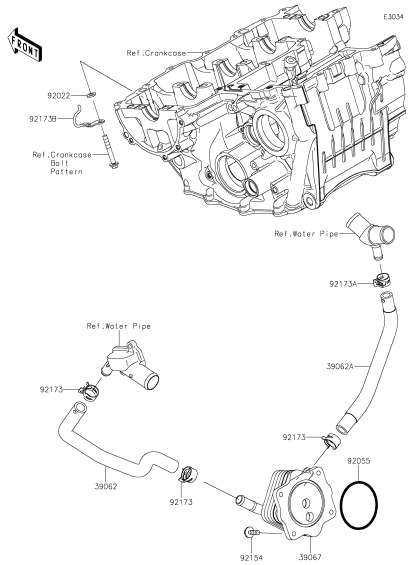

D-8 **Oil Cooler**

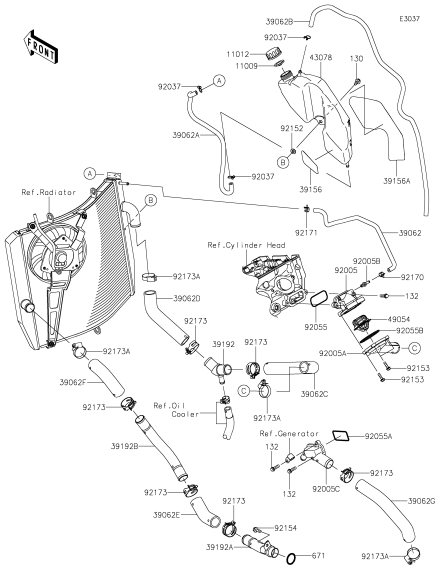

D-9 **Water Pipe**

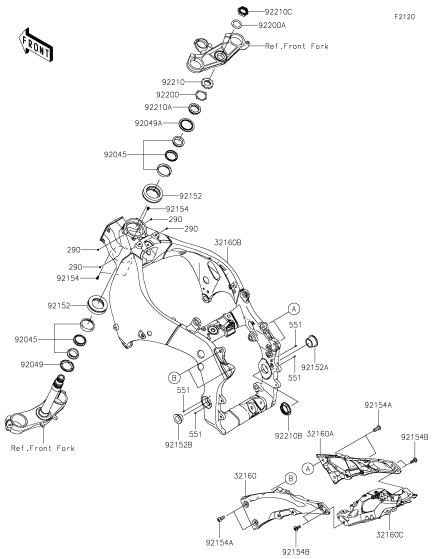

E-3 **Frame**

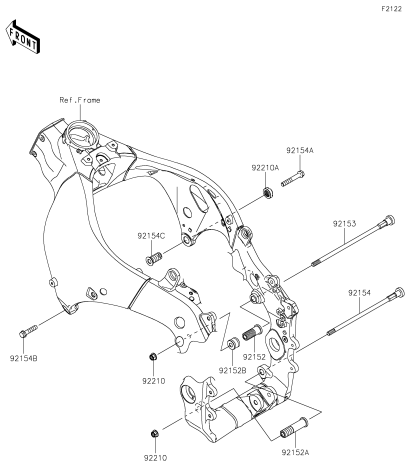

E-4 **Engine Mount**

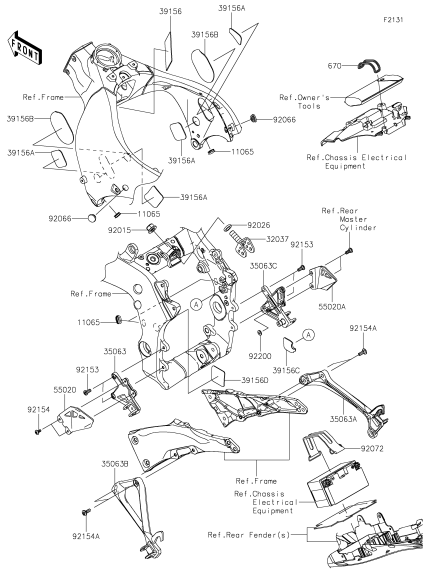

E-5 **Frame Fittings**

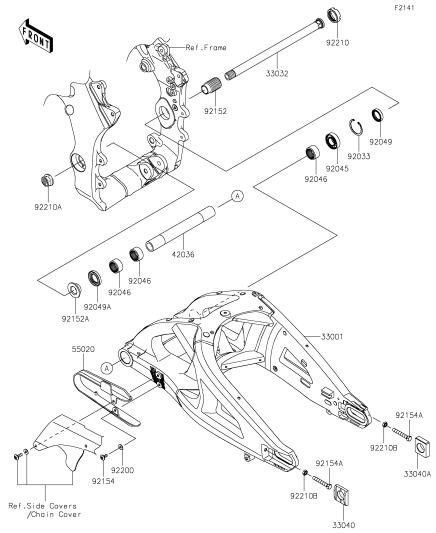

E-6 **Swingarm**

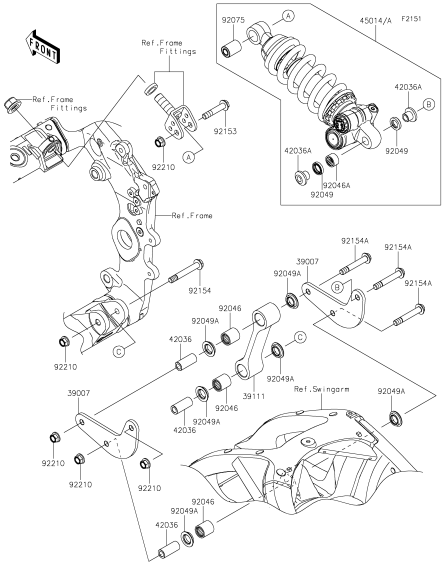

E-7 **Suspension/Shock Absorber**

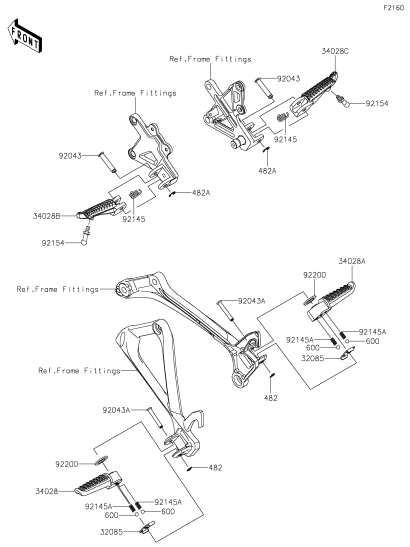

E-8 **Footrests**

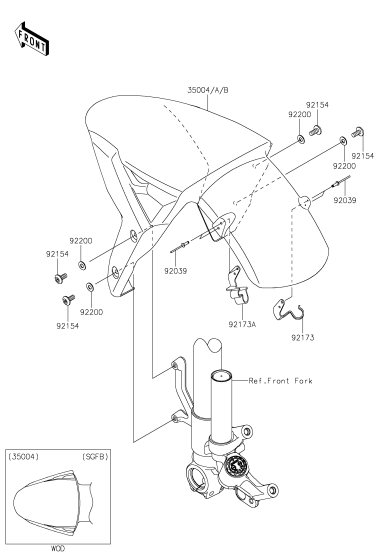

E-9 **Front Fender(s)**

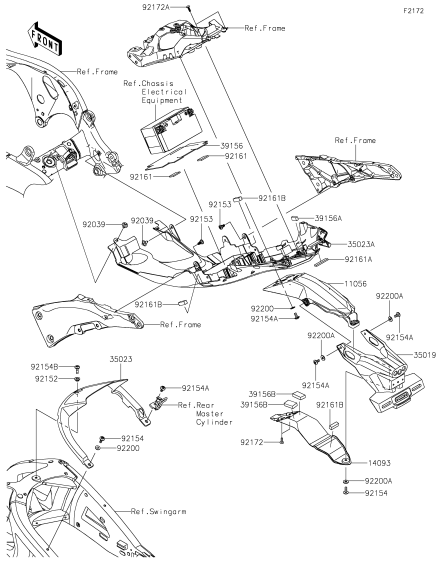

E-10 **Rear Fender(s)**

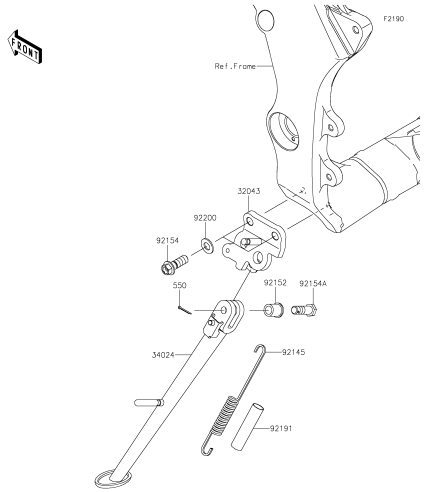

E-11 **Stand(s)**

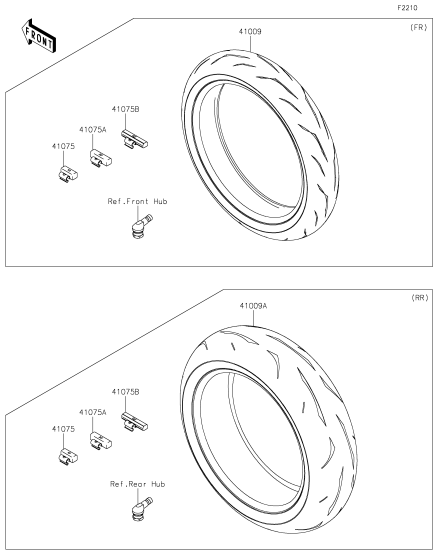

E-12 **Tires**

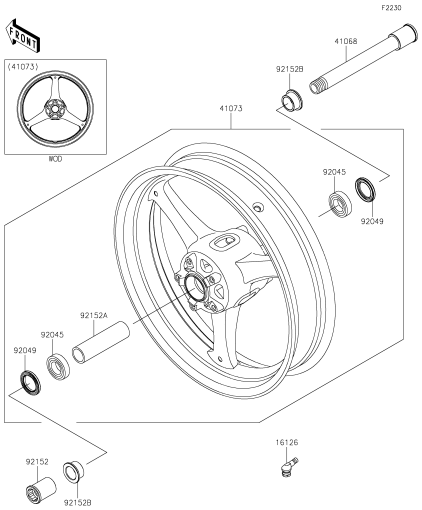

E-13 **Front Hub**

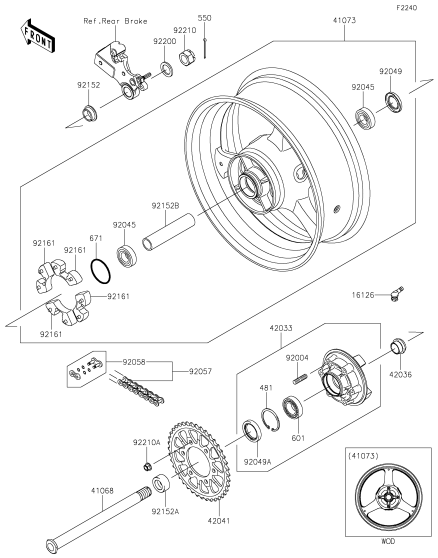

E-14 **Rear Hub**

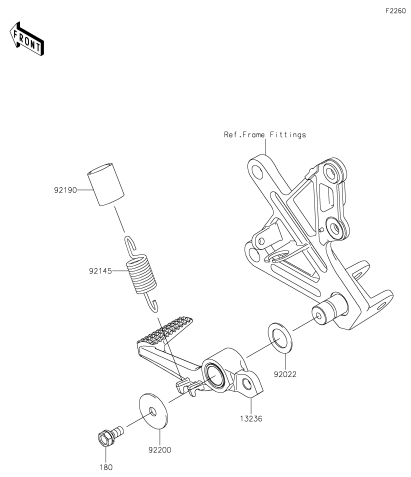

F-3 **Brake Pedal**

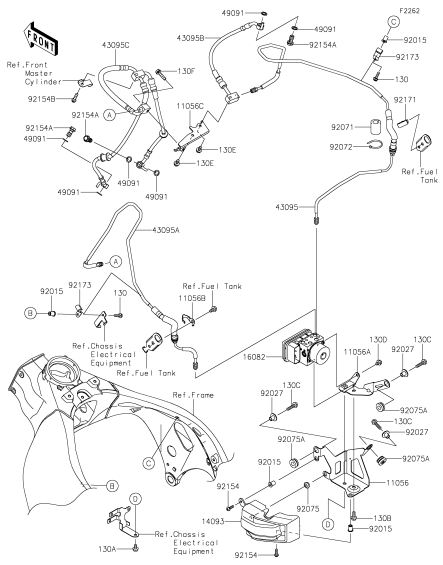

F-4 **Brake Piping**

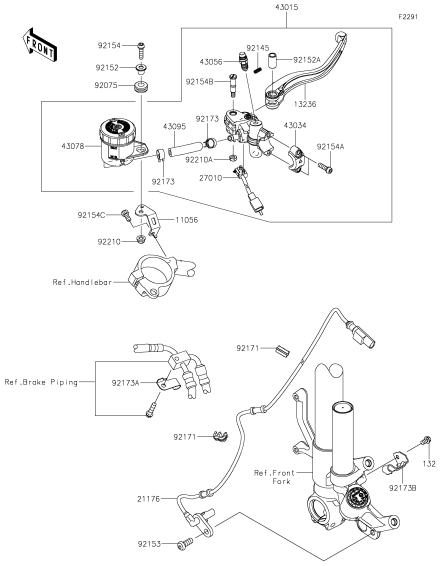

F-5 **Front Master Cylinder**

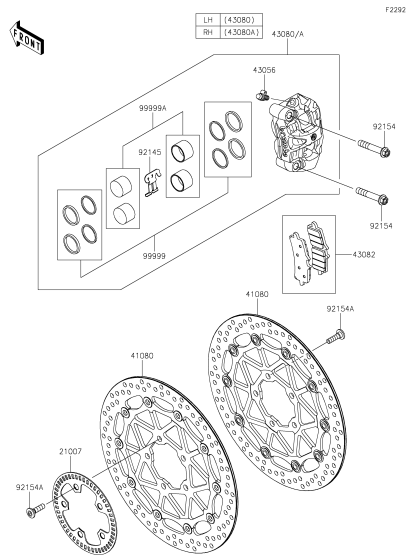

F-6 **Front Brake**

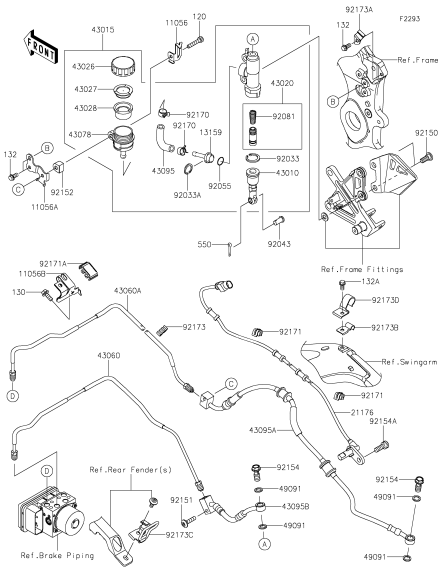

F-7 **Rear Master Cylinder(1/2)**

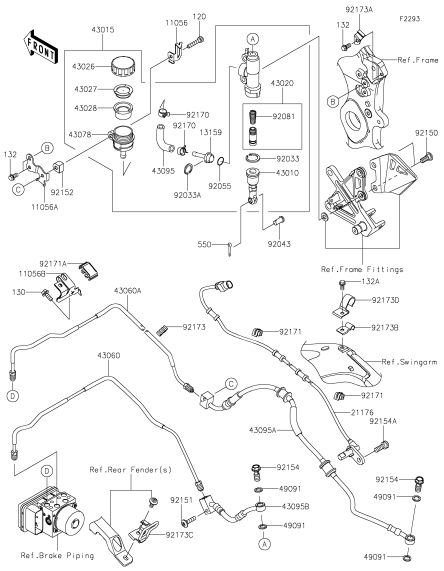

F-8 **Rear Master Cylinder(2/2)**

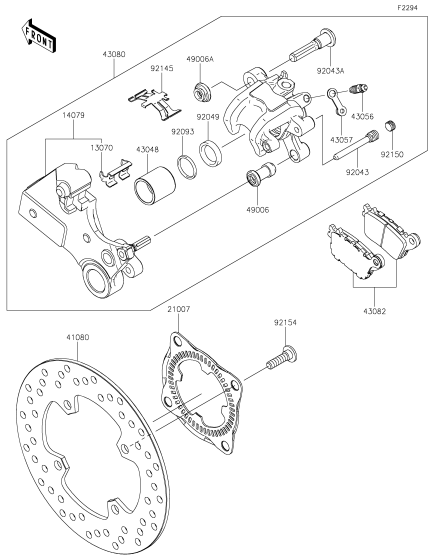

F-9 **Rear Brake**

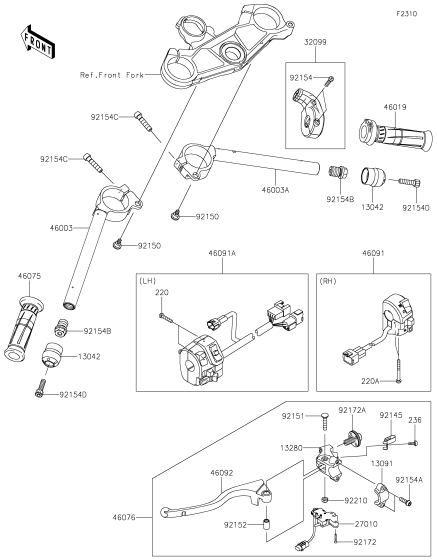

F-10 **Handlebar**

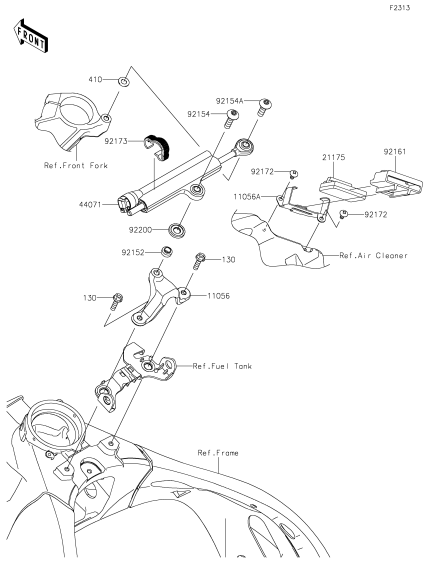

F-11 **Steering Damper**

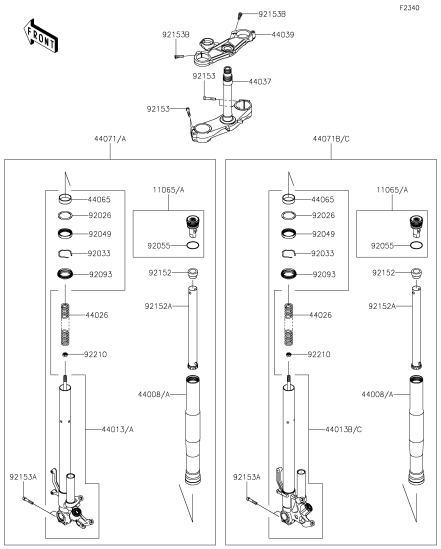

F-12 **Front Fork**

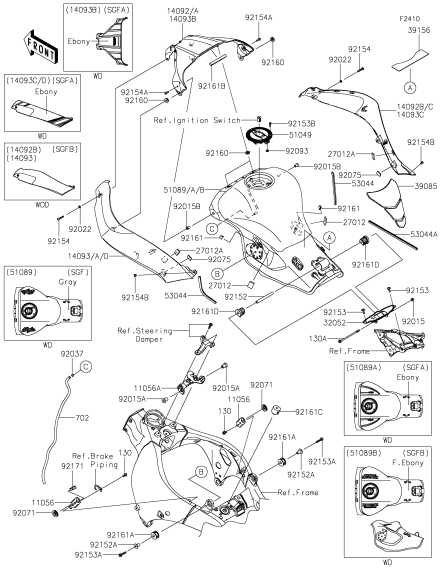

F-13 **Fuel Tank(1/2)**

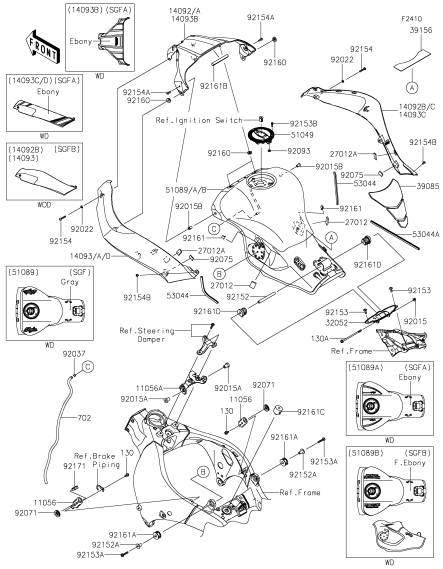

F-14 **Fuel Tank(2/2)**

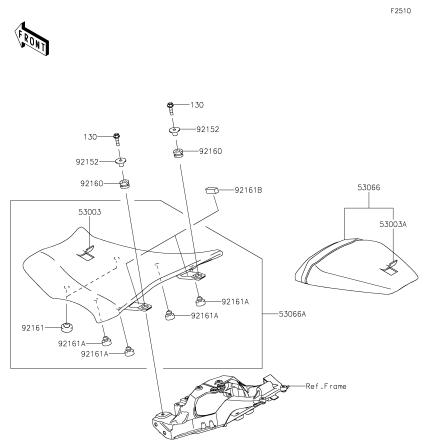

G-3 **Seat**

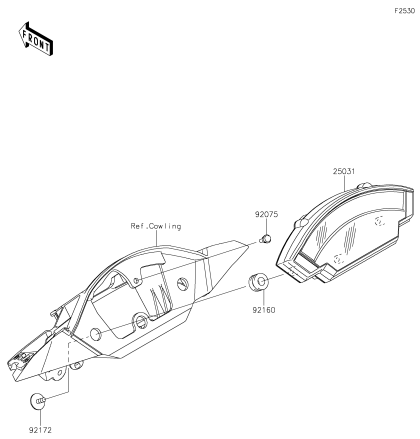

G-4 **Meter(s)**

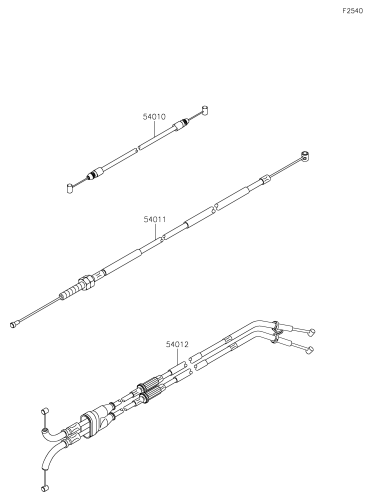

G-5 **Cables**

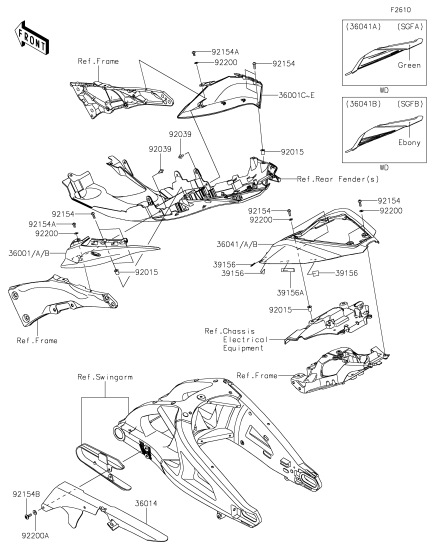

G-6 **Side Covers/Chain Cover**

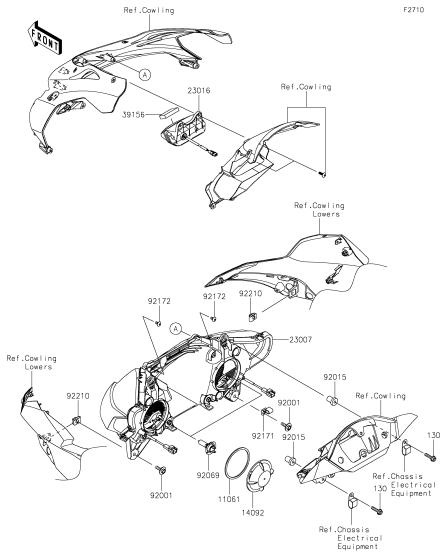

G-7 **Headlight(s)**

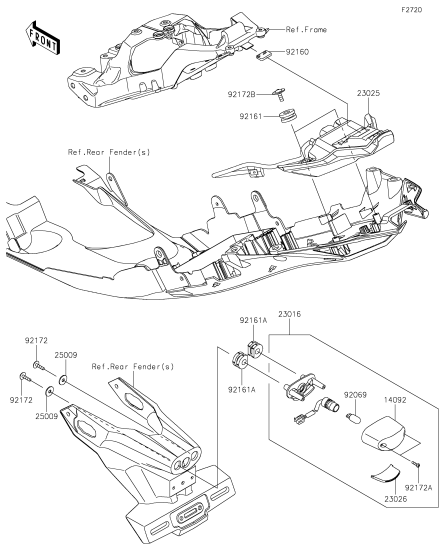

G-8 **Taillight(s)**

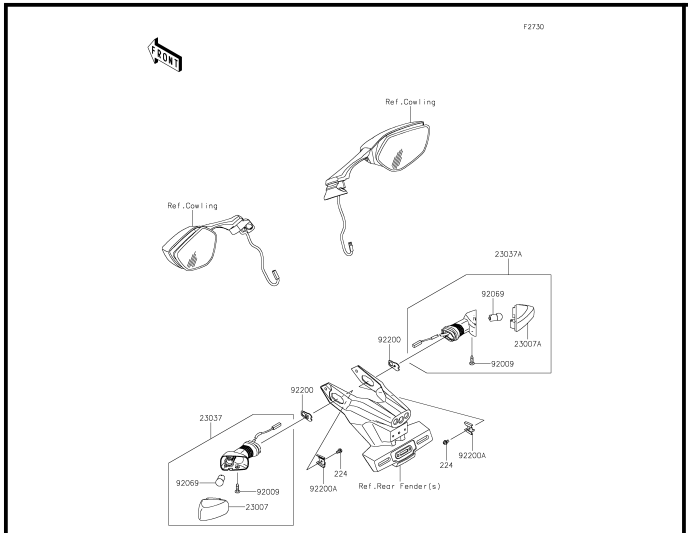

G-9 **Turn Signals**

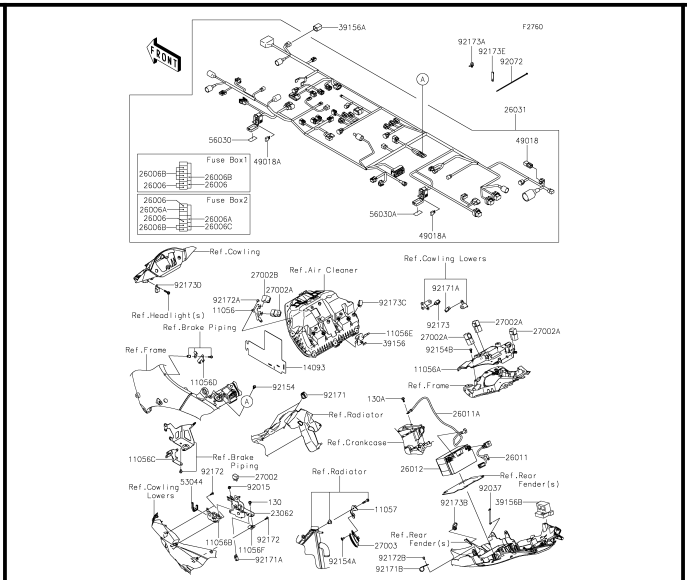

G-10 **Chassis Electrical Equipment(1/2)**

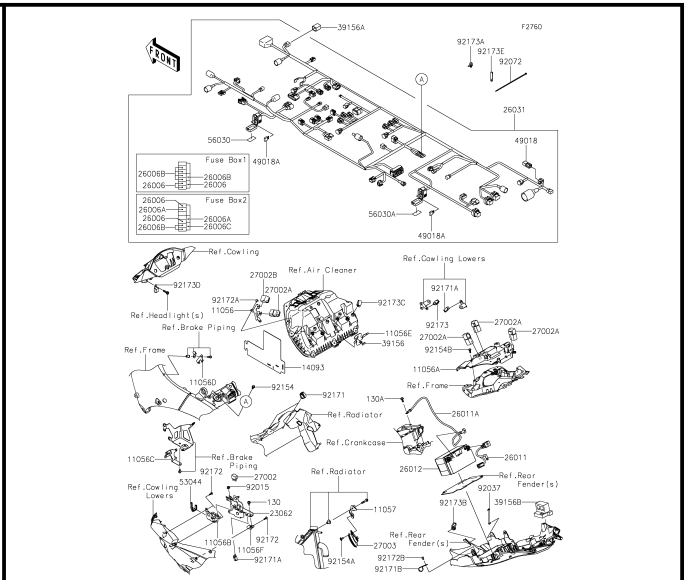

G-11 **Chassis Electrical Equipment(2/2)**

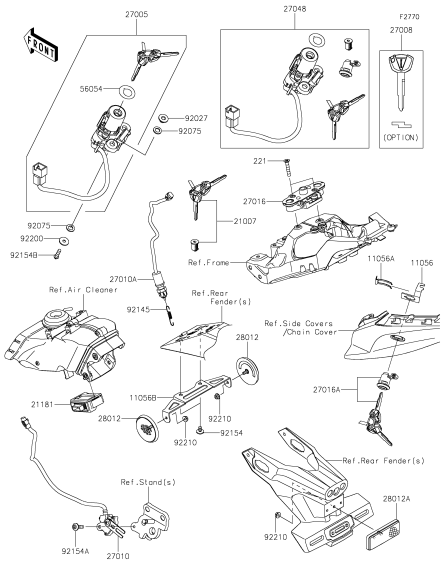

G-12 **Ignition Switch**

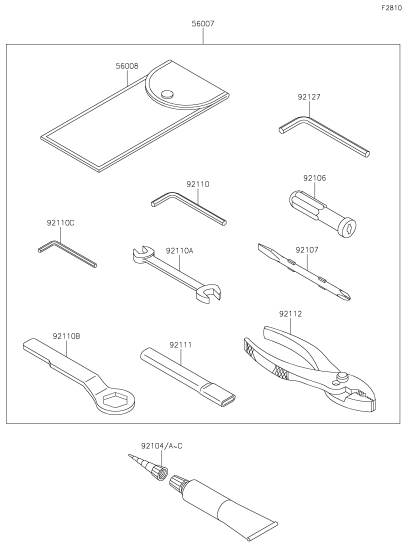

G-13 **Owner's Tools**

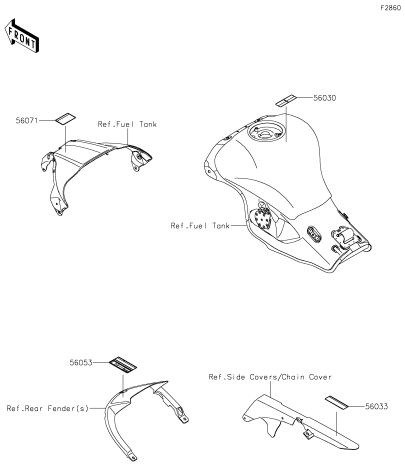

G-14 **Labels**

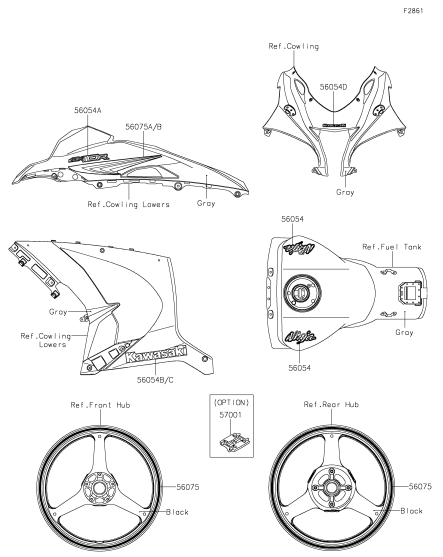

H-3 **Decals(Gray)(SGF)**

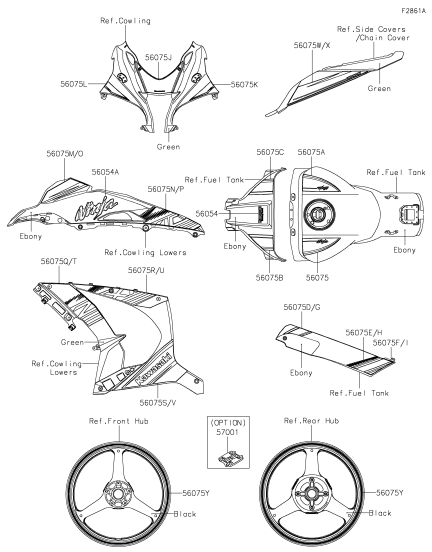

H-4 **Decals(Green)(SGFA)**

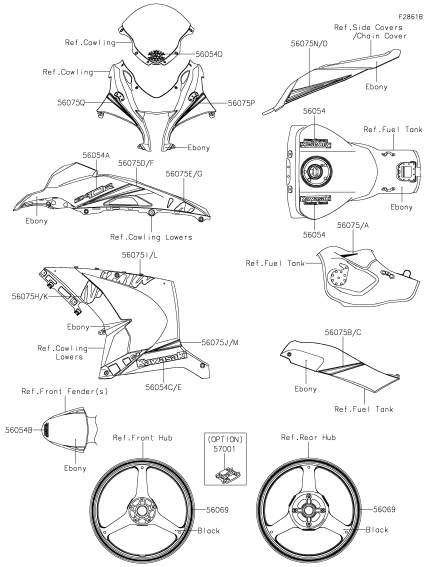

H-5 **Decals(Ebony)(SGFB)**

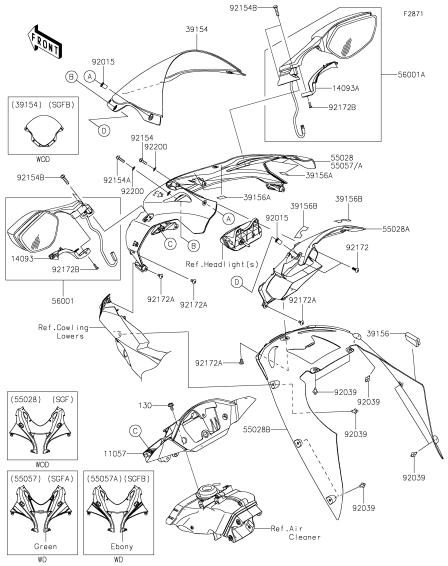

H-6 **Cowling**

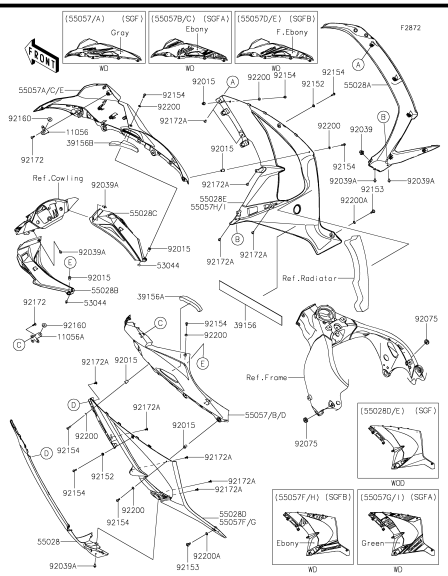

H-7 **Cowling Lowers**

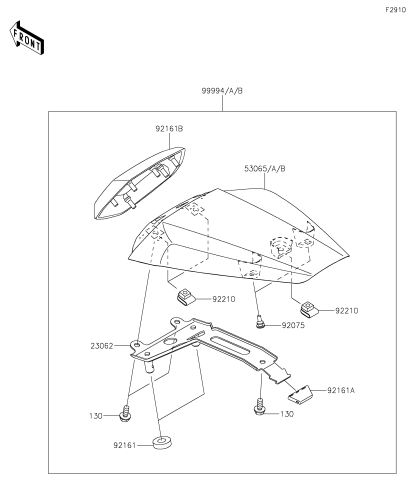

H-8 **Accessory(Single Seat Cover)**

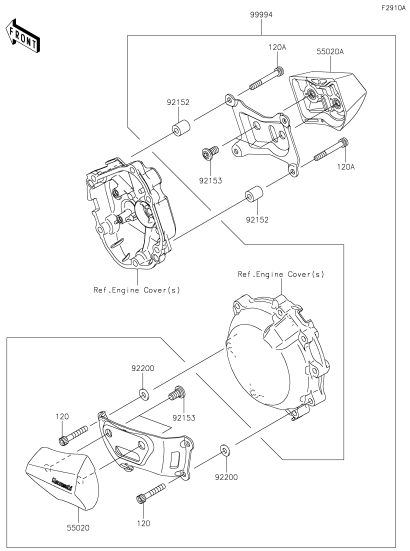

H-9 **Accessory(Frame Slider)**

This catalog covers:

'16 ZX1000 SGF/SGFA/SGFB Engine

GRID NO. **B-3**

This grid covers:

Cylinder Head

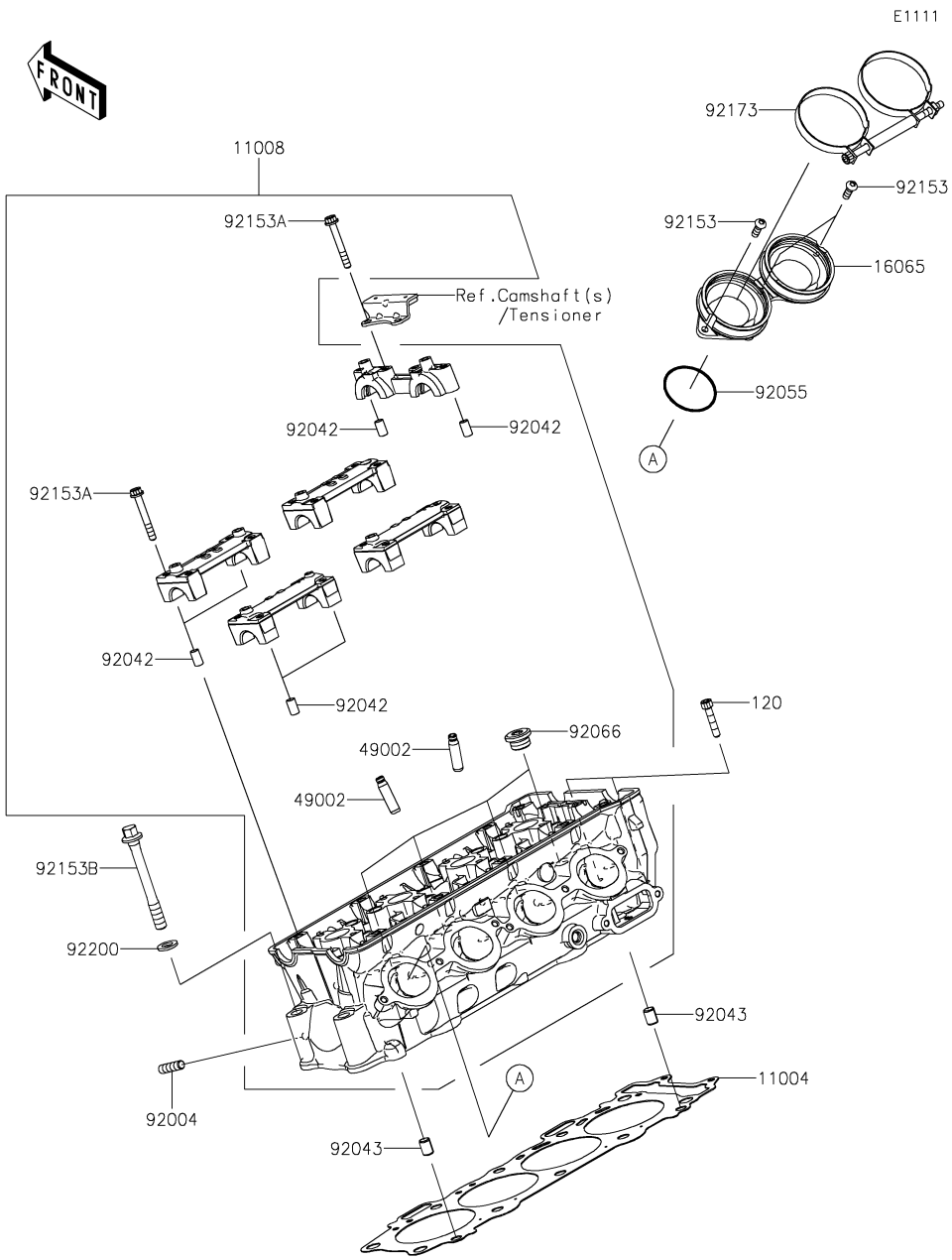

Ref. No.	Part No.	Description	Spec Code	Quantity-ZX1000 '16 SGF	'16 SGFA	'16 SGFB		
11004	11004-0759	GASKET-HEAD		1	1	1		
11008	11008-0869	HEAD-COMP-CYLINDER		1	1	1		
16065	16065-0115	HOLDER-CARBURETOR		2	2	2		
49002	49002-0009	GUIDE-VALVE		16	16	16		
92004	92004-0049	STUD,8X18		8	8	8		
92042	92042-007	PIN,DOWEL,6.3X8X14		10	10	10		
92043	92043-1264	PIN,8.2X10X14		2	2	2		
92055	92055-1600	RING-O,47X1.9		4	4	4		
92066	92066-0832	PLUG,18X10		4	4	4		
92153	92153-0454	BOLT,TORX,6X18		6	6	6		
92153A	92153-0656	BOLT,SOCKET,6X45		20	20	20		
92153B	92153-0893	BOLT,FLANGED,10X90		10	10	10		
92173	92173-0222	CLAMP		2	2	2		
92200	92200-0114	WASHER,10.5X19X2.3		10	10	10		
120	120CD0630	BOLT-SOCKET,6X30		2	2	2		

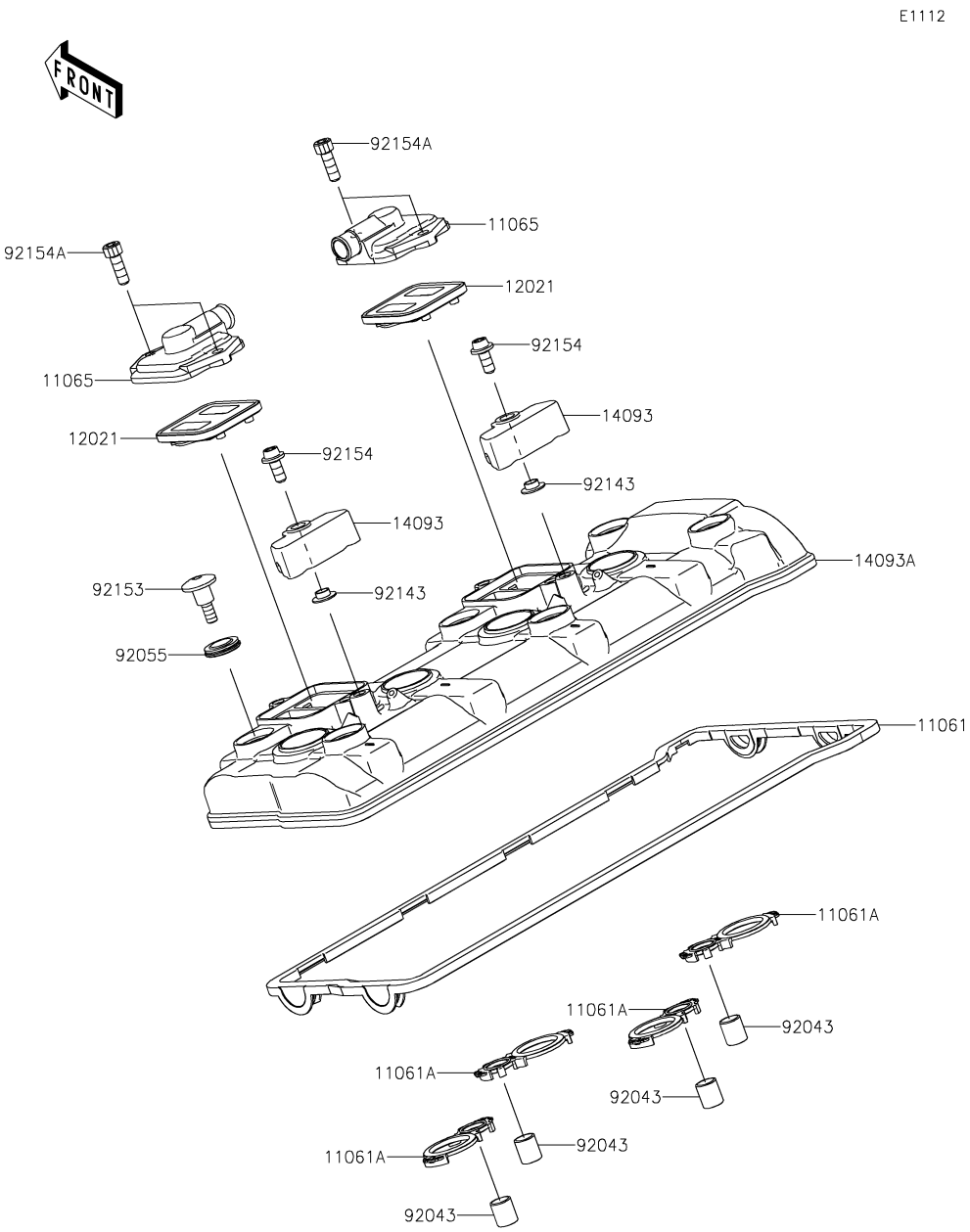

Ref. No.	Part No.	Description	Spec Code	Quantity-ZX1000 '16 SGF	'16 SGFA	'16 SGFB		
11061	11061-0436	GASKET,HEAD COVER		1	1	1		
11061A	11061-0437	GASKET,PLUG HOLE		4	4	4		
11065	11065-0360	CAP		2	2	2		
12021	12021-0021	VALVE-ASSY-REED		2	2	2		
14093	14093-0291	COVER		2	2	2		
14093A	14093-0335	COVER,HEAD		1	1	1		
92043	92043-4009	PIN,10.1X12X14		4	4	4		
92055	92055-0187	RING-O		6	6	6		
92143	92143-1331	COLLAR		2	2	2		
92153	92153-1779	BOLT,SOCKET,6X22.5		6	6	6		
92154	92154-1460	BOLT,SOCKET,6X14		2	2	2		
92154A	92154-1832	BOLT,SOCKET,6X18		4	4	4		

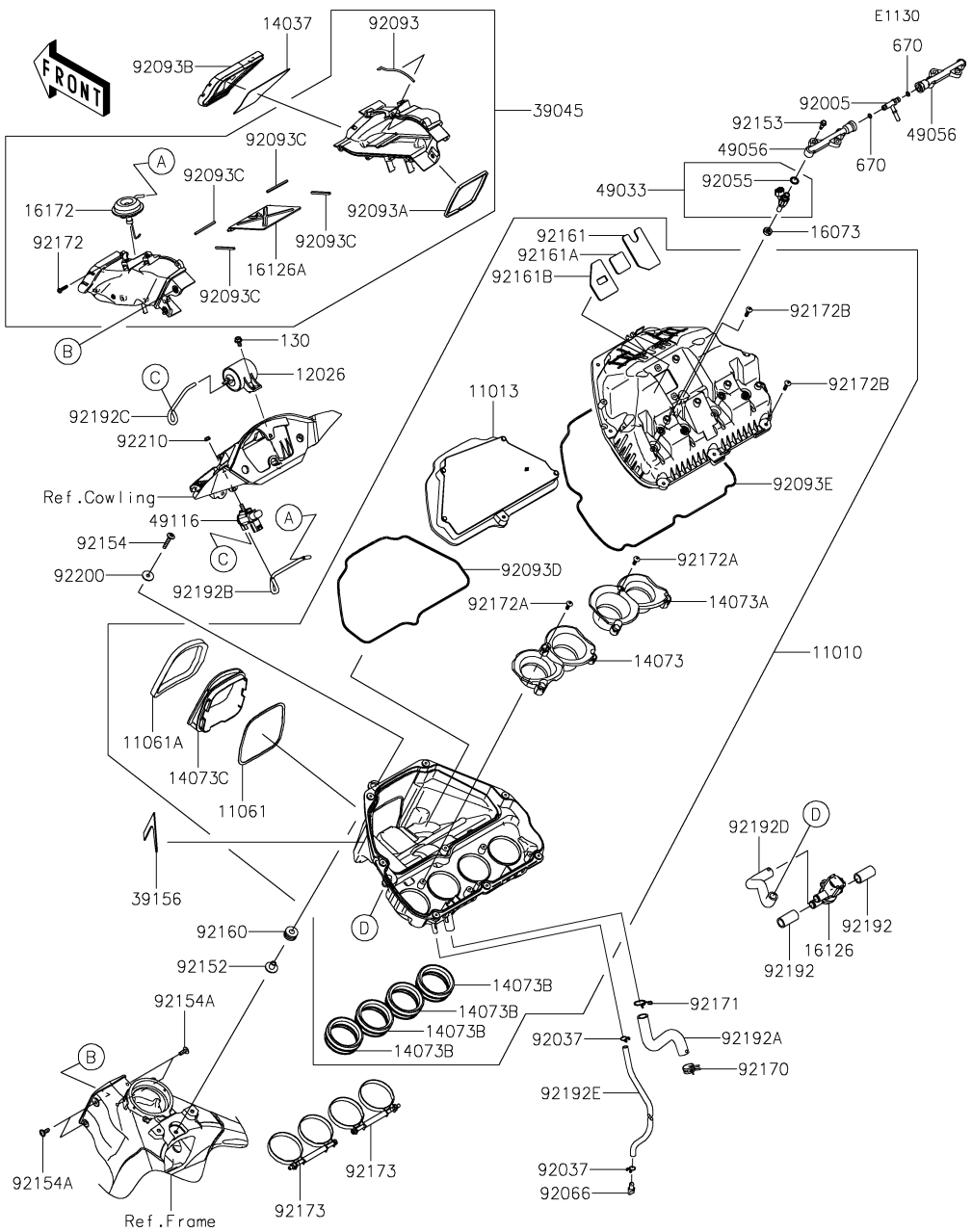

Ref. No.	Part No.	Description	Spec Code	Quantity-ZX1000 '16 SGF	'16 SGFA	'16 SGFB		
11010	11010-0844	FILTER-ASSY-AIR		1	1	1		
11013	11013-0757	ELEMENT-AIR FILTER		1	1	1		
11061	11061-0444	GASKET		1	1	1		
11061A	11061-0445	GASKET		1	1	1		
12026	12026-0009	CHAMBER		1	1	1		
14037	14037-0107	SCREEN		1	1	1		
14073	14073-0833	DUCT,FUNNEL,#1&#2		1	1	1		
14073A	14073-0834	DUCT,FUNNEL,#3&#4		1	1	1		
14073B	14073-0835	DUCT,SUB FUNNEL		4	4	4		
14073C	14073-0841	DUCT		1	1	1		
16073	16073-0129	INSULATOR		4	4	4		
16126	16126-0038	VALVE,AIR SWITCHING		1	1	1		
16126A	16126-0057	VALVE		1	1	1		
16172	16172-0023	ACTUATOR		1	1	1		
39045	39045-0041	DUCT-ASSY,RAM		1	1	1		
39156	39156-1988	PAD		1	1	1		
49033	49033-0027	NOZZLE-INJECTION		4	4	4		
49056	49056-0032	PIPE-INJECTION		2	2	2		
49116	49116-0031	VALVE-ASSY		1	1	1		
92005	92005-0125	FITTING		1	1	1		
92037	92037-147	CLAMP,TUBE		2	2	2		
92055	92055-0124	RING-O,INJECTION NOZZLE		4	4	4		
92066	92066-1211	PLUG,DRAIN		1	1	1		
92093	92093-0175	SEAL		1	1	1		
92093A	92093-0176	SEAL		1	1	1		
92093B	92093-0177	SEAL		1	1	1		
92093C	92093-0178	SEAL		4	4	4		
92093D	92093-0686	SEAL,ELEMENT		1	1	1		
92093E	92093-0693	SEAL,CASE		1	1	1		
92152	92152-2197	COLLAR		1	1	1		
92153	92153-0361	BOLT,FLANGED,5MM		4	4	4		
92154	92154-0435	BOLT,SOCKET,6X30		1	1	1		
92154A	92154-1882	BOLT,FLANGED,BUTTON,6X18		4	4	4		
92160	92160-1162	DAMPER		1	1	1		
92161	92161-1844	DAMPER		1	1	1		
92161A	92161-1845	DAMPER		1	1	1		
92161B	92161-1846	DAMPER		1	1	1		
92170	92170-1060	CLAMP		1	1	1		
92171	92171-0391	CLAMP		1	1	1		
92172	92172-0009	SCREW,TAPPING,5X20		7	7	7		

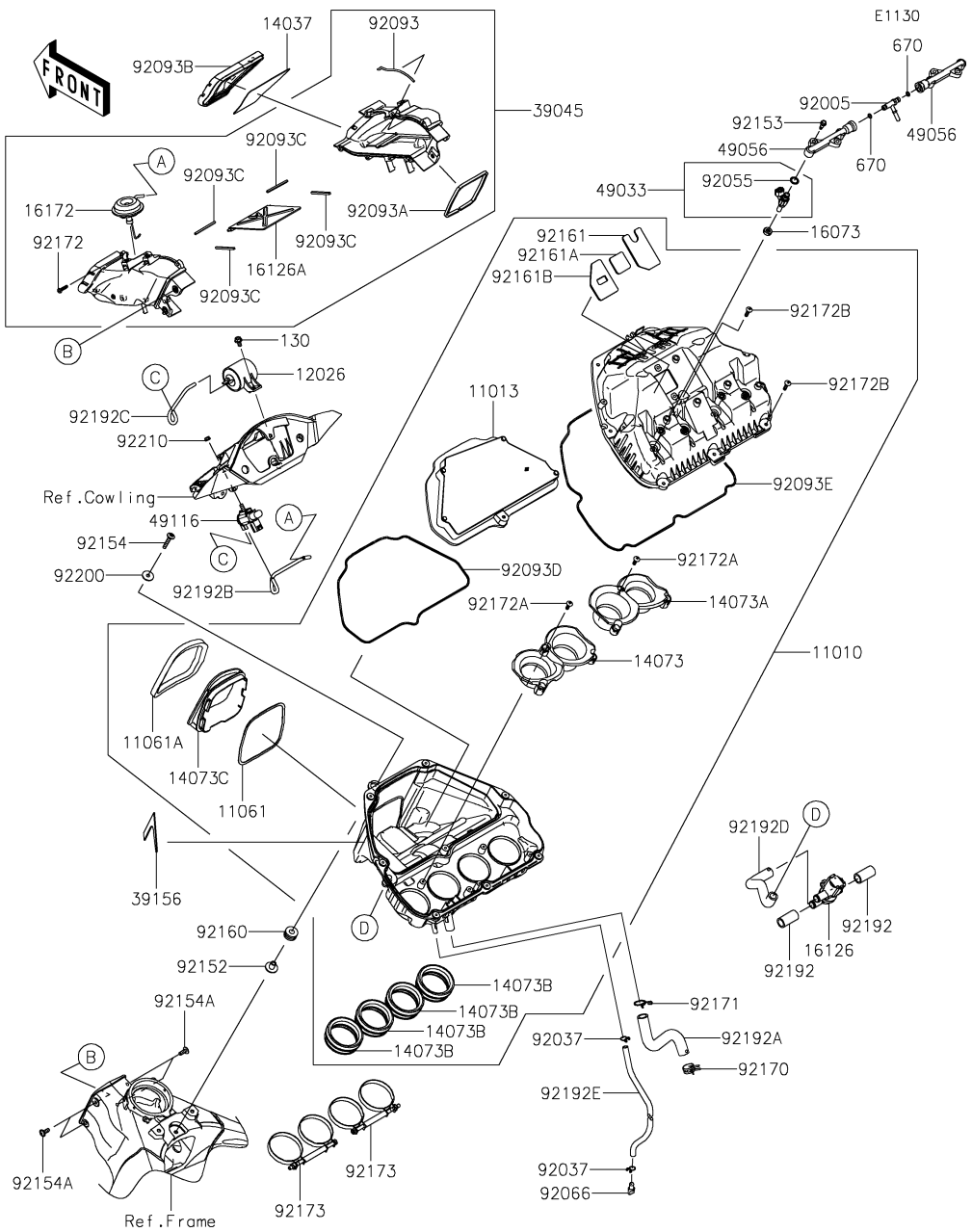

Ref. No.	Part No.	Description	Spec Code	Quantity-ZX1000 '16 SGF	'16 SGFA	'16 SGFB		
92172A	92172-0482	SCREW,TAPPING,5X16		6	6	6		
92172B	92172-0483	SCREW,TAPPING,5X20		8	8	8		
92173	92173-0222	CLAMP		2	2	2		
92192	92192-0887	TUBE,12X17.6X38		2	2	2		
92192A	92192-0889	TUBE,BREATHER		1	1	1		
92192B	92192-0892	TUBE,4X8X250		1	1	1		
92192C	92192-1119	TUBE		1	1	1		
92192D	92192-1619	TUBE,AIR CLEANER-ASV		1	1	1		
92192E	92192-1644	TUBE,10X13X420		1	1	1		
92200	92200-1087	WASHER,6.5X22X1.6		1	1	1		
92210	92210-0368	NUT,FLANGED,6MM		1	1	1		
130	130BA0612	BOLT-FLANGED,6X12		1	1	1		
670	670E1508	O RING,8MM		2	2	2		

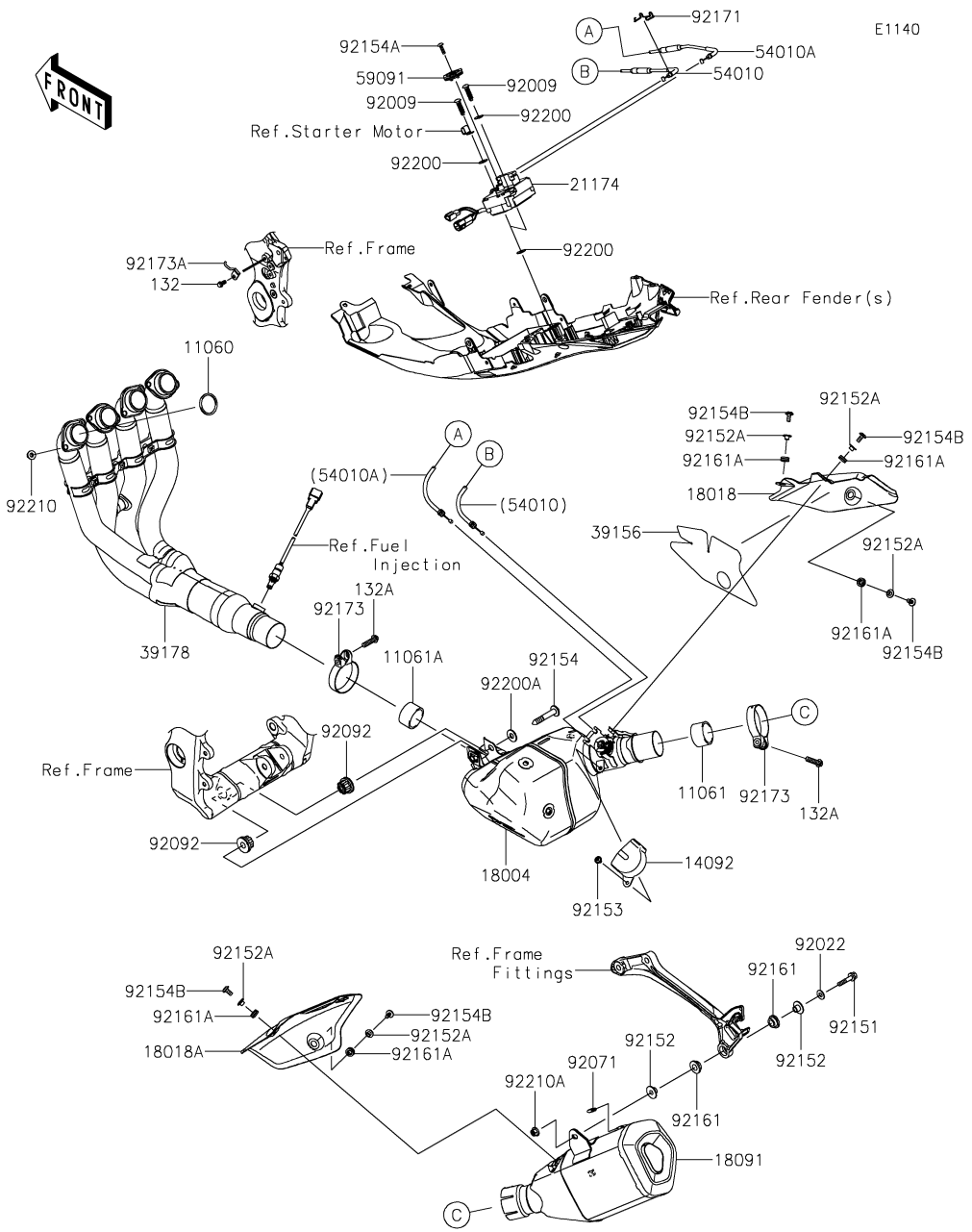

Ref. No.	Part No.	Description	Spec Code	Quantity-ZX1000 '16 SGF	'16 SGFA	'16 SGFB		
11060	11060-1203	GASKET,EXHAUST PIPE		4	4	4		
11061	11061-0447	GASKET,50.8X62X30		1	1	1		
11061A	11061-0448	GASKET,54X62X30		1	1	1		
14092	14092-0705	COVER,PULLEY		1	1	1		
18004	18004-0019	CHAMBER-PREMUFFLER		1	1	1		
18018	18018-0600	PLATE-HEAT GUARD,CHAMBER		1	1	1		
18018A	18018-0601	PLATE-HEAT GUARD,MUFFLER		1	1	1		
18091	18091-0970	BODY-COMP-MUFFLER		1	1	1		
21174	21174-0009	MOTOR-ELECTRIC		1	1	1		
39156	39156-1937	PAD		1	1	1		
39178	39178-0248	MANIFOLD-COMP-EXHAUST		1	1	1		
54010	54010-0610	CABLE,OPEN		1	1	1		
54010A	54010-0611	CABLE,CLOSE		1	1	1		
59091	59091-0007	PULLEY		1	1	1		
92009	92009-1481	SCREW,TAPPING,6X30		2	2	2		
92022	92022-3730	WASHER,8.5X19X1.2		1	1	1		
92071	92071-1270	GROMMET		1	1	1		
92092	92092-1087	BUSHING-RUBBER,MUFFLER		2	2	2		
92151	92151-1532	BOLT,FLANGED,8X40		1	1	1		
92152	92152-0188	COLLAR		2	2	2		
92152A	92152-2180	COLLAR,6.3X8.3X16		5	5	5		
92153	92153-1527	BOLT,SOCKET,6X10		1	1	1		
92154	92154-0125	BOLT,SOCKET,10X61		1	1	1		
92154A	92154-0217	BOLT,TORX,5X18		1	1	1		
92154B	92154-0907	BOLT,SOCKET,6X14		5	5	5		
92161	92161-0135	DAMPER		2	2	2		
92161A	92161-0308	DAMPER		5	5	5		
92171	92171-0292	CLAMP		1	1	1		
92173	92173-0284	CLAMP,64.5MM		2	2	2		
92173A	92173-1528	CLAMP		1	1	1		
92200	92200-0078	WASHER		4	4	4		
92200A	92200-1377	WASHER,10.5X25X2.0		1	1	1		
92210	92210-0076	NUT,8MM		8	8	8		
92210A	92210-0121	NUT,8MM		1	1	1		
132	132BA0612	BOLT-FLANGED-SMALL,6X12		1	1	1		
132A	132BC0830	BOLT-FLANGED-SMALL,8X30		2	2	2		

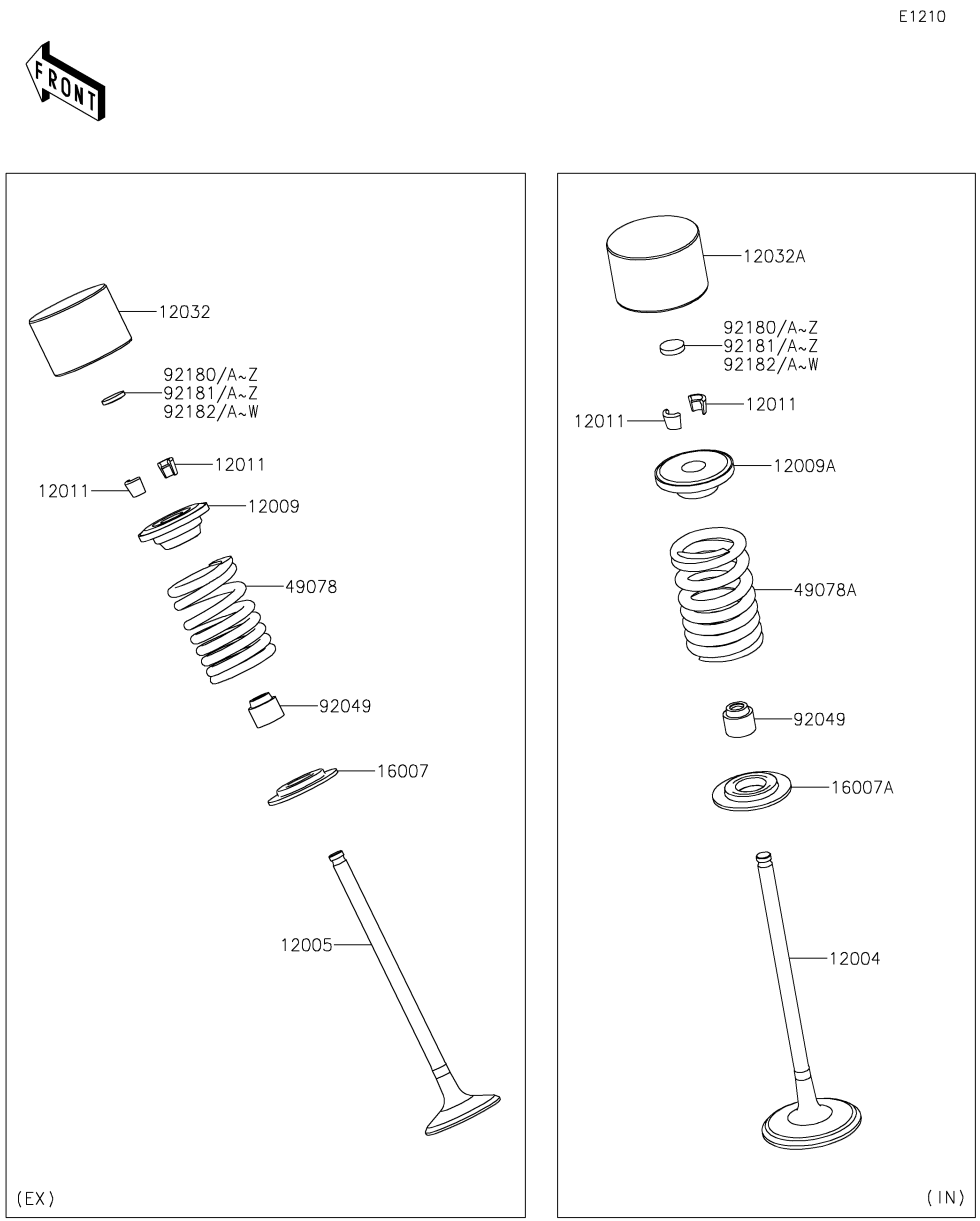

Ref. No.	Part No.	Description	Spec Code	Quantity-ZX1000 '16 SGF	'16 SGFA	'16 SGFB		
12004	12004-0044	VALVE-INTAKE		8	8	8		
12005	12005-0755	VALVE-EXHAUST		8	8	8		
12009	12009-0028	RETAINER-VALVE SPRING,EX		8	8	8		
12009A	12009-0708	RETAINER-VALVE SPRING,IN		8	8	8		
12011	12011-1053	COLLET		32	32	32		
12032	12032-0013	TAPPET,D26.5,EX		8	8	8		
12032A	12032-0015	TAPPET,IN		8	8	8		
16007	16007-0003	SEAT-SPRING,EX		8	8	8		
16007A	16007-0044	SEAT-SPRING,IN		8	8	8		
49078	49078-0729	SPRING-ENGINE VALVE,EX		8	8	8		
49078A	49078-0730	SPRING-ENGINE VALVE,IN		8	8	8		
92049	92049-1349	SEAL-OIL,VSB 4.3 7.5 5.3 8.3		16	16	16		
92180	92180-0108	SHIM,T=1.300		AR	AR	AR		
92180A	92180-0109	SHIM,T=1.325		AR	AR	AR		
92180B	92180-0110	SHIM,T=1.350		AR	AR	AR		
92180C	92180-0865	SHIM,T=1.375		AR	AR	AR		
92180D	92180-0866	SHIM,T=1.388		AR	AR	AR		
92180E	92180-0867	SHIM,T=1.400		AR	AR	AR		
92180F	92180-0868	SHIM,T=1.413		AR	AR	AR		
92180G	92180-0869	SHIM,T=1.425		AR	AR	AR		
92180H	92180-0870	SHIM,T=1.438		AR	AR	AR		
92180I	92180-0871	SHIM,T=1.450		AR	AR	AR		
92180J	92180-0872	SHIM,T=1.463		AR	AR	AR		
92180K	92180-0873	SHIM,T=1.475		AR	AR	AR		
92180L	92180-0874	SHIM,T=1.488		AR	AR	AR		
92180M	92180-0875	SHIM,T=1.500		AR	AR	AR		
92180N	92180-0876	SHIM,T=1.513		AR	AR	AR		
92180O	92180-0877	SHIM,T=1.525		AR	AR	AR		
92180P	92180-0878	SHIM,T=1.538		AR	AR	AR		
92180Q	92180-0879	SHIM,T=1.550		AR	AR	AR		
92180R	92180-0880	SHIM,T=1.563		AR	AR	AR		
92180S	92180-0881	SHIM,T=1.575		AR	AR	AR		
92180T	92180-0882	SHIM,T=1.588		AR	AR	AR		
92180U	92180-0883	SHIM,T=1.600		AR	AR	AR		
92180V	92180-0884	SHIM,T=1.613		AR	AR	AR		
92180W	92180-0885	SHIM,T=1.625		AR	AR	AR		
92180X	92180-0886	SHIM,T=1.638		AR	AR	AR		
92180Y	92180-0887	SHIM,T=1.650		AR	AR	AR		
92180Z	92180-0888	SHIM,T=1.663		AR	AR	AR		
92181	92180-0889	SHIM,T=1.675		AR	AR	AR		

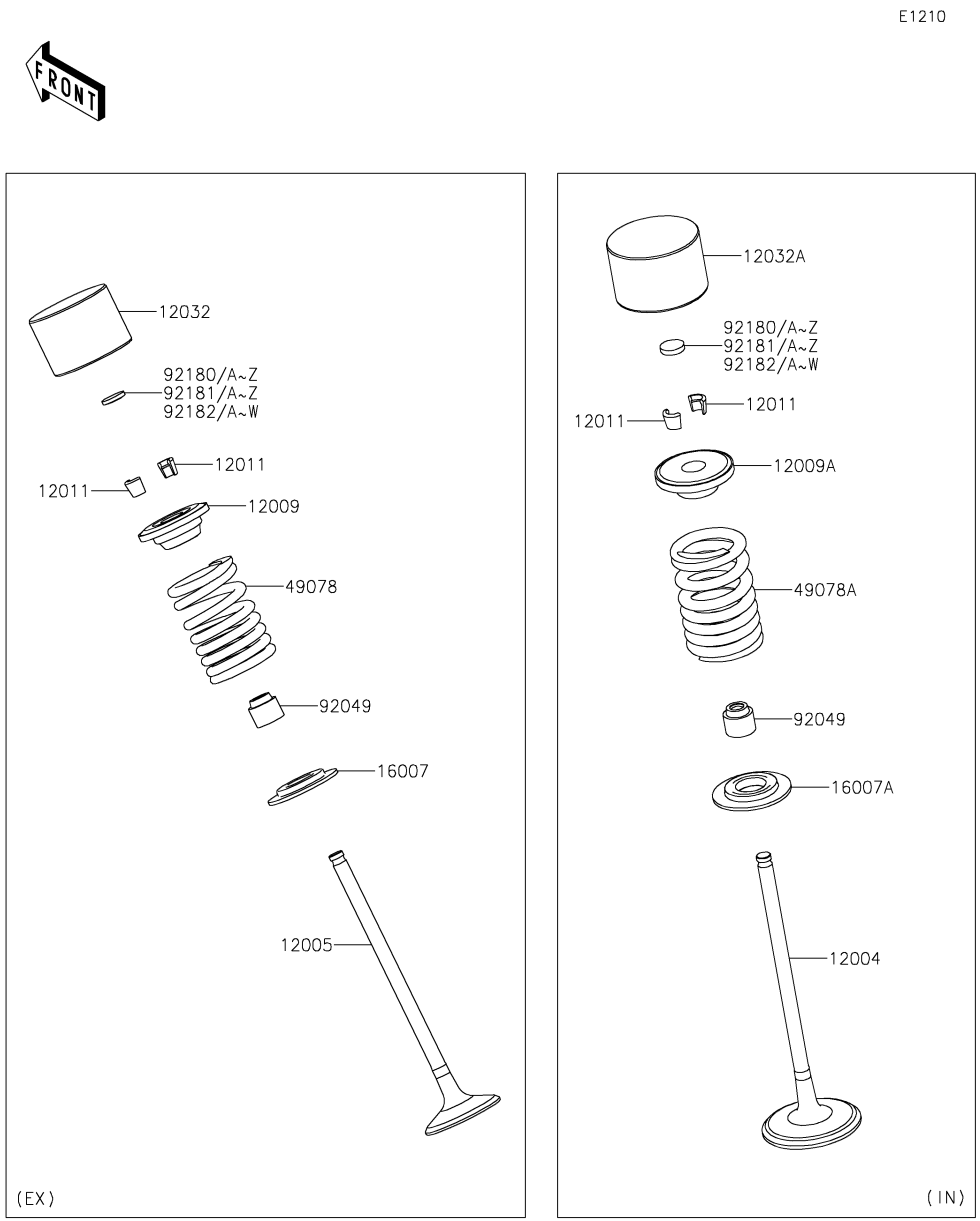

Ref. No.	Part No.	Description	Spec Code	Quantity-ZX1000 '16 SGF	'16 SGFA	'16 SGFB		
92181A	92180-0890	SHIM,T=1.688		AR	AR	AR		
92181B	92180-0891	SHIM,T=1.700		AR	AR	AR		
92181C	92180-0892	SHIM,T=1.713		AR	AR	AR		
92181D	92180-0893	SHIM,T=1.725		AR	AR	AR		
92181E	92180-0894	SHIM,T=1.738		AR	AR	AR		
92181F	92180-0895	SHIM,T=1.750		AR	AR	AR		
92181G	92180-0896	SHIM,T=1.763		AR	AR	AR		
92181H	92180-0897	SHIM,T=1.775		AR	AR	AR		
92181I	92180-0898	SHIM,T=1.788		AR	AR	AR		
92181J	92180-0899	SHIM,T=1.800		16	16	16		
92181K	92180-0900	SHIM,T=1.813		AR	AR	AR		
92181L	92180-0901	SHIM,T=1.825		AR	AR	AR		
92181M	92180-0902	SHIM,T=1.838		AR	AR	AR		
92181N	92180-0903	SHIM,T=1.850		AR	AR	AR		
92181O	92180-0904	SHIM,T=1.863		AR	AR	AR		
92181P	92180-0905	SHIM,T=1.875		AR	AR	AR		
92181Q	92180-0906	SHIM,T=1.888		AR	AR	AR		
92181R	92180-0907	SHIM,T=1.900		AR	AR	AR		
92181S	92180-0908	SHIM,T=1.913		AR	AR	AR		
92181T	92180-0909	SHIM,T=1.925		AR	AR	AR		
92181U	92180-0910	SHIM,T=1.938		AR	AR	AR		
92181V	92180-0911	SHIM,T=1.950		AR	AR	AR		
92181W	92180-0912	SHIM,T=1.963		AR	AR	AR		
92181X	92180-0913	SHIM,T=1.975		AR	AR	AR		
92181Y	92180-0914	SHIM,T=1.988		AR	AR	AR		
92181Z	92180-0915	SHIM,T=2.000		AR	AR	AR		
92182	92180-0916	SHIM,T=2.013		AR	AR	AR		
92182A	92180-0917	SHIM,T=2.025		AR	AR	AR		
92182B	92180-0918	SHIM,T=2.038		AR	AR	AR		
92182C	92180-0919	SHIM,T=2.050		AR	AR	AR		
92182D	92180-0920	SHIM,T=2.063		AR	AR	AR		
92182E	92180-0921	SHIM,T=2.075		AR	AR	AR		
92182F	92180-0922	SHIM,T=2.088		AR	AR	AR		
92182G	92180-0923	SHIM,T=2.100		AR	AR	AR		
92182H	92180-0924	SHIM,T=2.113		AR	AR	AR		
92182I	92180-0925	SHIM,T=2.125		AR	AR	AR		
92182J	92180-0926	SHIM,T=2.138		AR	AR	AR		
92182K	92180-0927	SHIM,T=2.150		AR	AR	AR		
92182L	92180-0928	SHIM,T=2.163		AR	AR	AR		
92182M	92180-0929	SHIM,T=2.175		AR	AR	AR		

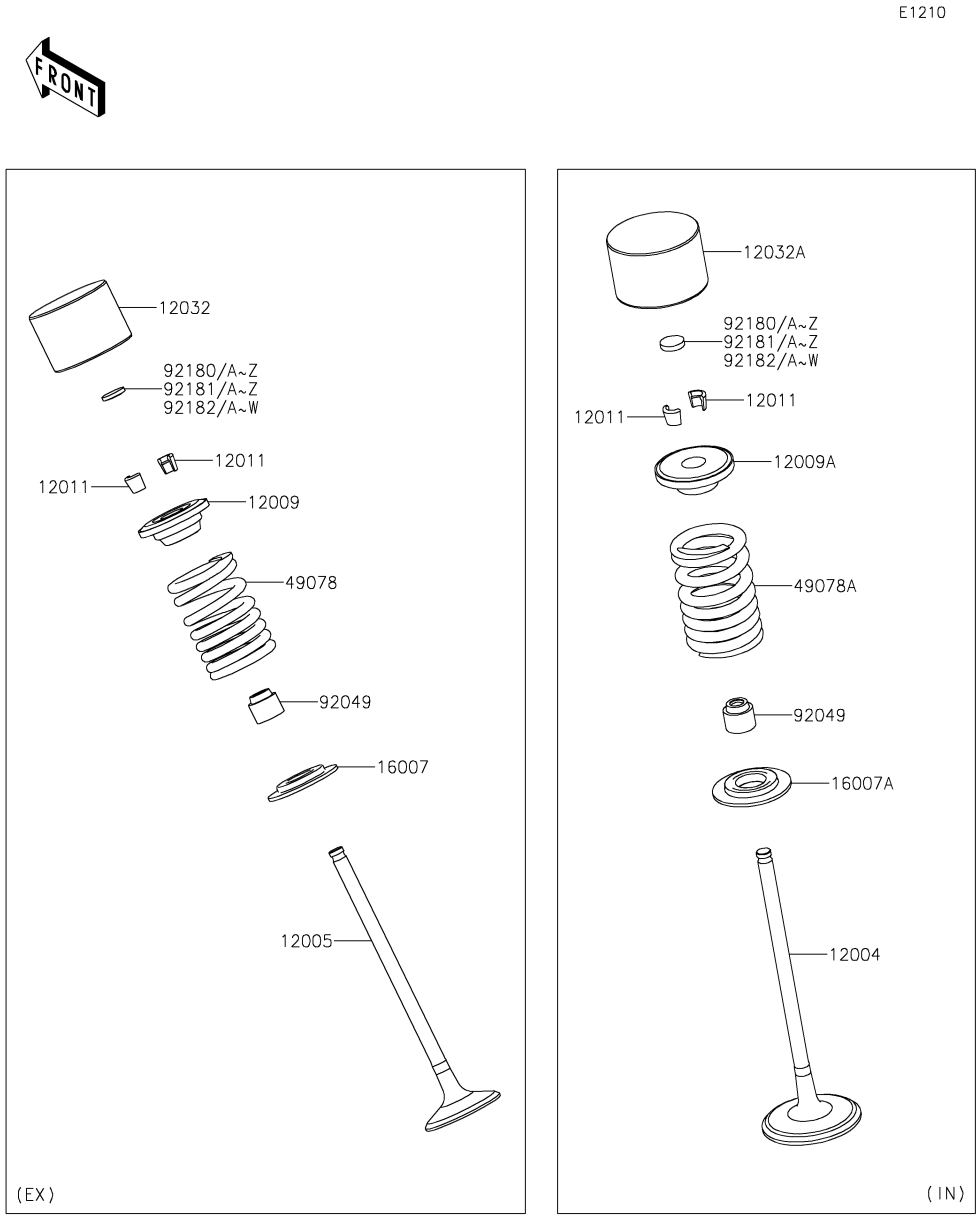

Ref. No.	Part No.	Description	Spec Code	Quantity-ZX1000 '16 SGF	'16 SGFA	'16 SGFB		
92182N	92180-0930	SHIM,T=2.188		AR	AR	AR		
92182O	92180-0931	SHIM,T=2.200		AR	AR	AR		
92182P	92180-0932	SHIM,T=2.213		AR	AR	AR		
92182Q	92180-0933	SHIM,T=2.225		AR	AR	AR		
92182R	92180-0934	SHIM,T=2.238		AR	AR	AR		
92182S	92180-0935	SHIM,T=2.250		AR	AR	AR		
92182T	92180-0936	SHIM,T=2.263		AR	AR	AR		
92182U	92180-0937	SHIM,T=2.275		AR	AR	AR		
92182V	92180-0938	SHIM,T=2.288		AR	AR	AR		
92182W	92180-0939	SHIM,T=2.300		AR	AR	AR		

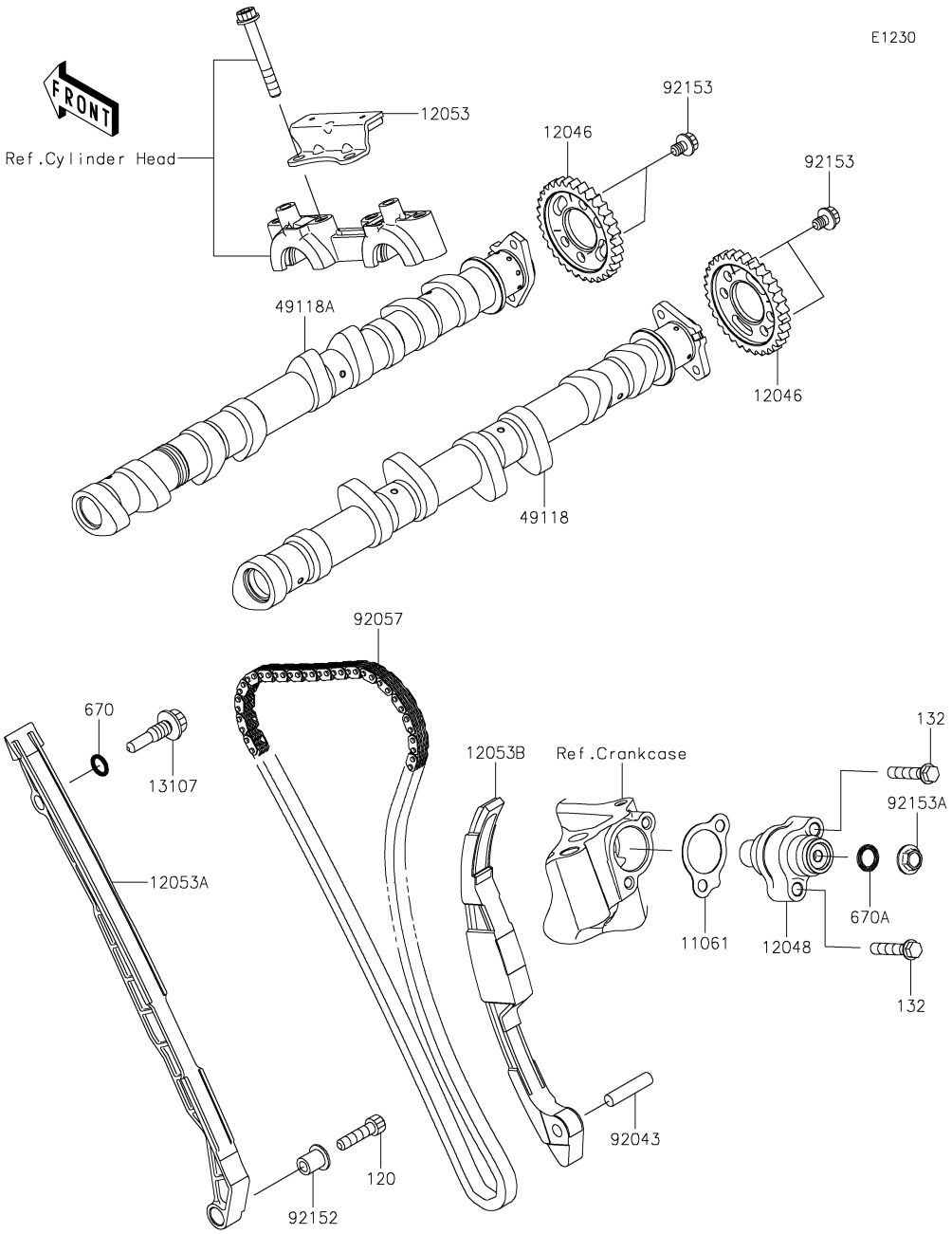

Ref. No.	Part No.	Description	Spec Code	Quantity-ZX1000 '16 SGF	'16 SGFA	'16 SGFB		
11061	11061-0999	GASKET,TENSIONER		1	1	1		
12046	12046-0590	SPROCKET,32T		2	2	2		
12048	12048-0096	TENSIONER-ASSY		1	1	1		
12053	12053-0173	GUIDE-CHAIN,UPP		1	1	1		
12053A	12053-0175	GUIDE-CHAIN,FR		1	1	1		
12053B	12053-0228	GUIDE-CHAIN,RR		1	1	1		
13107	13107-0157	SHAFT,CHAIN GUIDE		1	1	1		
49118	49118-0860	CAMSHAFT-COMP,INTAKE		1	1	1		
49118A	49118-0869	CAMSHAFT-COMP,EXHAUST		1	1	1		
92043	92043-0062	PIN,7X30.7		1	1	1		
92057	92057-0202	CHAIN,98XRH2015-126M		1	1	1		
92152	92152-0413	COLLAR		1	1	1		
92153	92153-0455	BOLT,FLANGED,6X8		4	4	4		
92153A	92153-1380	BOLT,6X6		1	1	1		
120	120CA0625	BOLT-SOCKET,6X25		1	1	1		
132	132BC0630	BOLT-FLANGED-SMALL,6X30		2	2	2		
670	670D1509	O RING,9MM		1	1	1		
670A	670D2010	O RING,10MM		1	1	1		

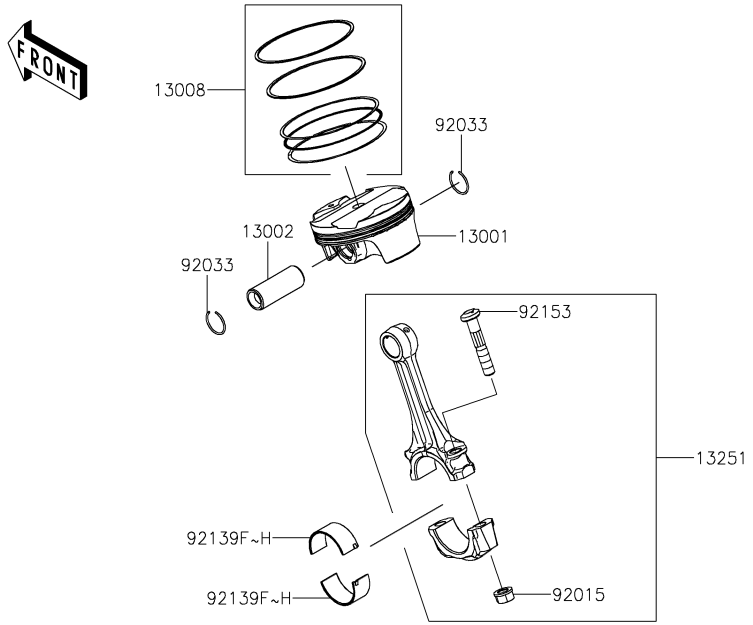

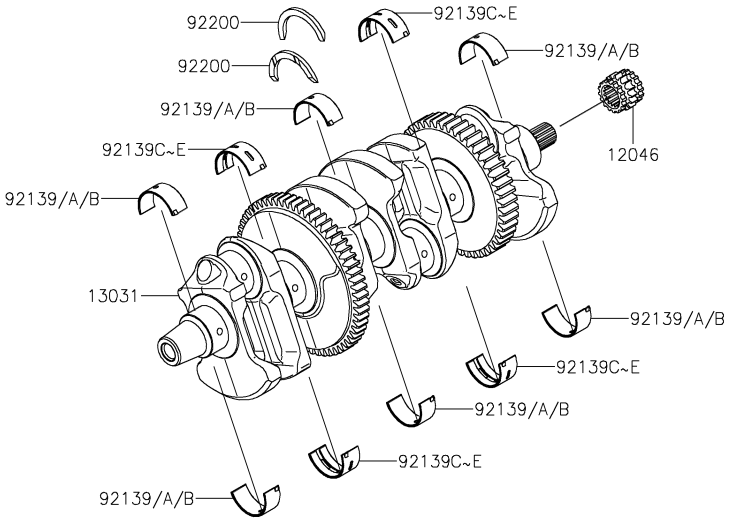

Ref. No.	Part No.	Description	Spec Code	Quantity-ZX1000 '16 SGF	'16 SGFA	'16 SGFB		
12046	12046-0033	SPROCKET,16T		1	1	1		
13001	13001-0774	PISTON-ENGINE		4	4	4		
13002	13002-0004	PIN-PISTON		4	4	4		
13008	13008-0562	RING-SET-PISTON		4	4	4		
13031	13031-0833	CRANKSHAFT-COMP		1	1	1		
13251	13251-0725-HH	ROD-ASSY-CONNECTING,H		4	4	4		
92015	92015-1311	NUT,FLANGED,8MM		8	8	8		
92033	92033-1054	RING-SNAP		8	8	8		
92139	92139-0298	BUSHING,#1&#3&#5,BLUE		AR	AR	AR		
92139A	92139-0299	BUSHING,#1&#3&#5,BLACK		6	6	6		
92139B	92139-0300	BUSHING,#1&#3&#5,BROWN		AR	AR	AR		
92139C	92139-0301	BUSHING,#2&#4,BLUE		AR	AR	AR		
92139D	92139-0302	BUSHING,#2&#4,BLACK		4	4	4		
92139E	92139-0303	BUSHING,#2&#4,BROWN		AR	AR	AR		
92139F	92139-0853	BUSHING,PIN,BLUE		8	8	8		
92139G	92139-0854	BUSHING,PIN,BLACK		AR	AR	AR		
92139H	92139-0855	BUSHING,PIN,BROWN		AR	AR	AR		
92153	92153-0809	BOLT,CON-ROD,M8X45.5		8	8	8		
92200	92200-0424	WASHER,T=3.25		2	2	2		

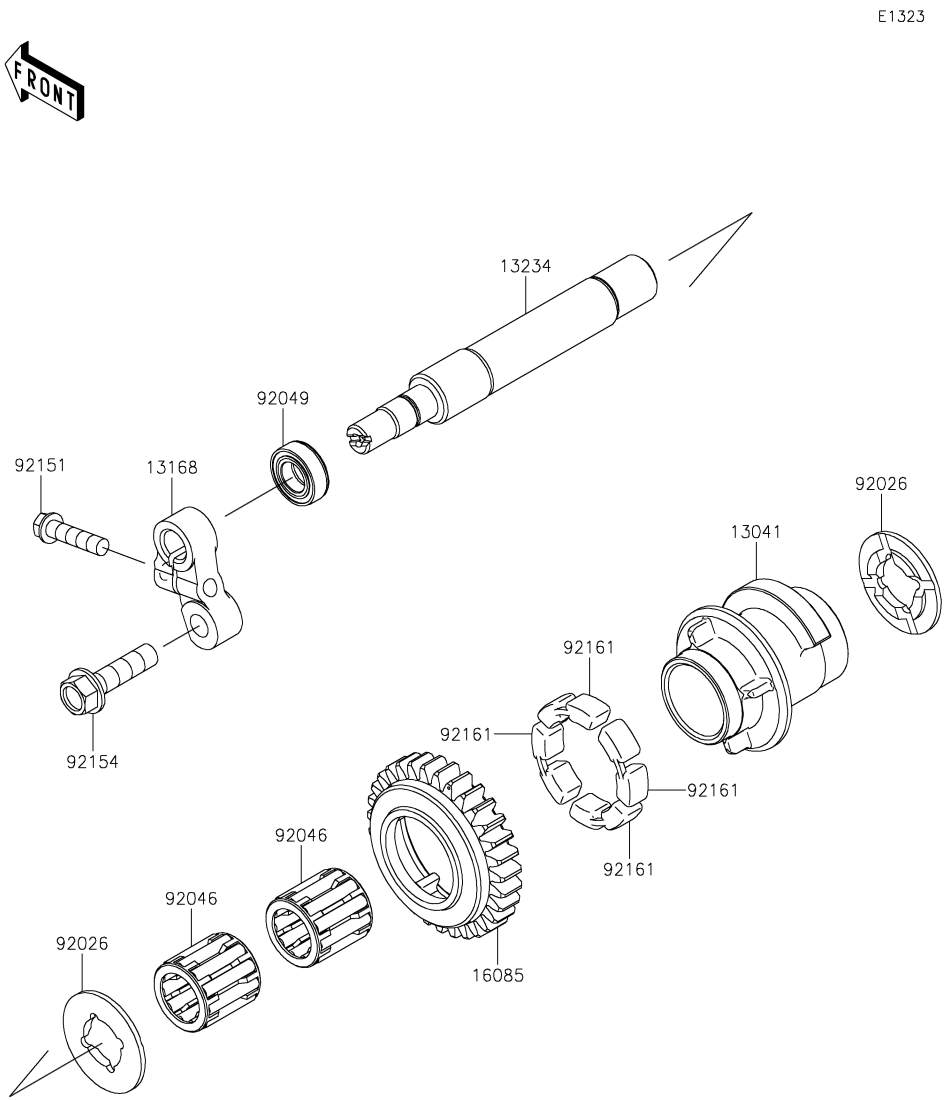

Ref. No.	Part No.	Description	Spec Code	Quantity-ZX1000 '16 SGF	'16 SGFA	'16 SGFB		
13041	13041-0047	BALANCER		1	1	1		
13168	13168-0831	LEVER,BACKLASH ADJUSTMENT		1	1	1		
13234	13234-0589	SHAFT-COMP		1	1	1		
16085	16085-0144	GEAR,BALANCER,31T		1	1	1		
92026	92026-0082	SPACER		2	2	2		
92046	92046-1266	BEARING-NEEDLE		2	2	2		
92049	92049-0720	SEAL-OIL		1	1	1		
92151	92151-1930	BOLT,FLANGED-SMALL,6X25		1	1	1		
92154	92154-1796	BOLT,FLANGED,8X30		1	1	1		
92161	92161-1055	DAMPER		4	4	4		

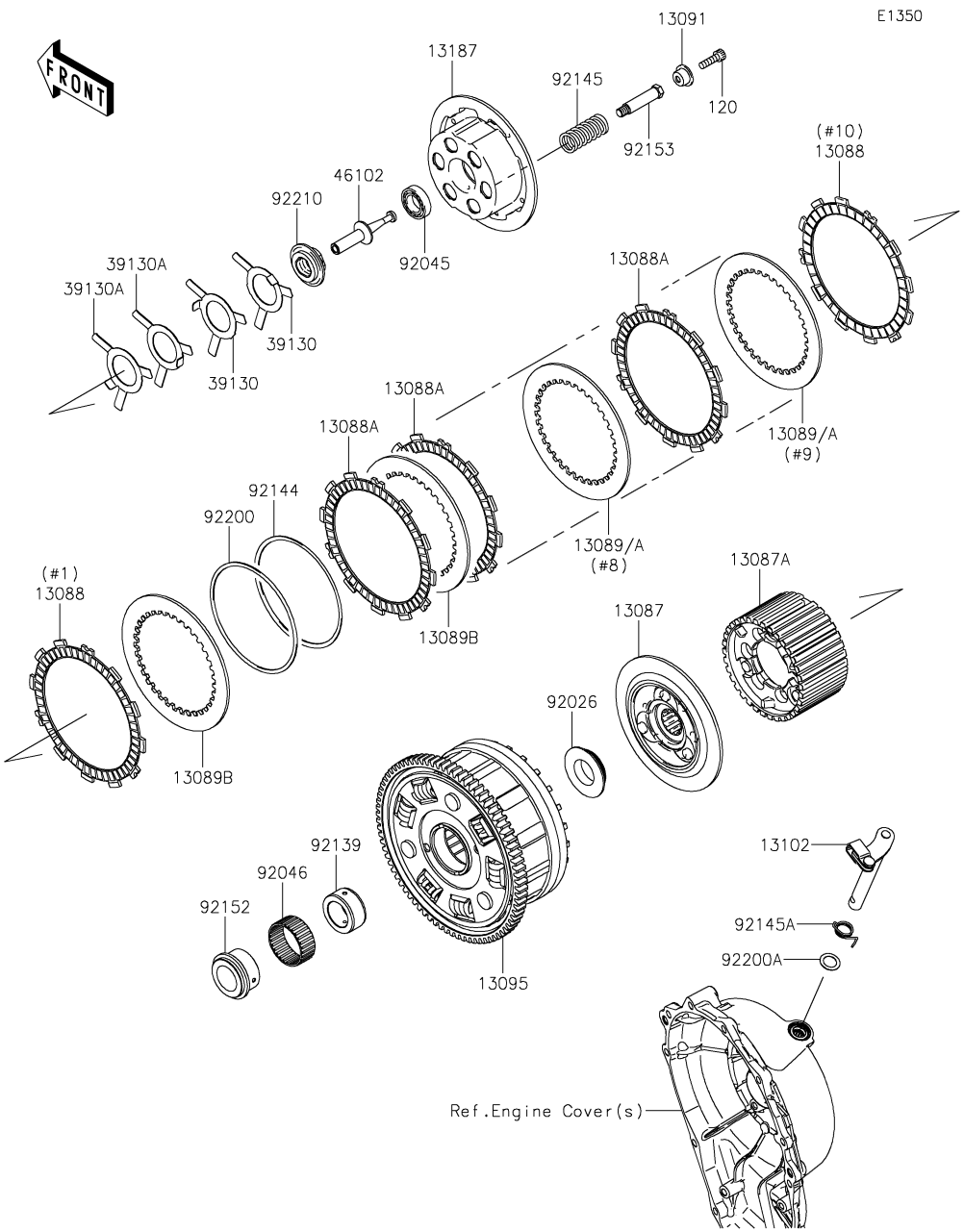

Ref. No.	Part No.	Description	Spec Code	Quantity-ZX1000 '16 SGF	'16 SGFA	'16 SGFB		
13087	13087-0010	HUB-CLUTCH		1	1	1		
13087A	13087-0011	HUB-CLUTCH		1	1	1		
13088	13088-0003	PLATE-FRICTION		2	2	2		
13088A	13088-0013	PLATE-FRICTION		8	8	8		
13089	13089-0008	PLATE-CLUTCH,T=2.3		AR	AR	AR		
13089A	13089-0009	PLATE-CLUTCH,T=2.6		2	2	2		
13089B	13089-1093	PLATE-CLUTCH,T=2.9		7	7	7		
13091	13091-1840	HOLDER,CLUTCH SPRING		6	6	6		
13095	13095-0582	HOUSING-COMP-CLUTCH		1	1	1		
13102	13102-0049	RELEASE-COMP-CLUTCH		1	1	1		
13187	13187-0006	PLATE-CLUTCH OPERATING		1	1	1		
39130	39130-1078	SPRING-LEAF		2	2	2		
39130A	39130-1079	SPRING-LEAF		2	2	2		
46102	46102-0609	ROD		1	1	1		
92026	92026-0164	SPACER		1	1	1		
92045	92045-1053	BEARING-BALL,6903/2A		1	1	1		
92046	92046-0041	BEARING-NEEDLE		1	1	1		
92139	92139-0304	BUSHING,25X38X17.3		1	1	1		
92144	92144-1854	SPRING,FRICTION PLATE		1	1	1		
92145	92145-0220	SPRING,CLUTCH		6	6	6		
92145A	92145-0325	SPRING,RELEASE-COMP		1	1	1		
92152	92152-0866	COLLAR		1	1	1		
92153	92153-0797	BOLT		6	6	6		
92200	92200-1260	WASHER,FRICTION PLATE		1	1	1		
92200A	92200-1487	WASHER,12X18.5X0.5		1	1	1		
92210	92210-0152	NUT		1	1	1		
120	120Q0620	BOLT-SOCKET,6X20		6	6	6		

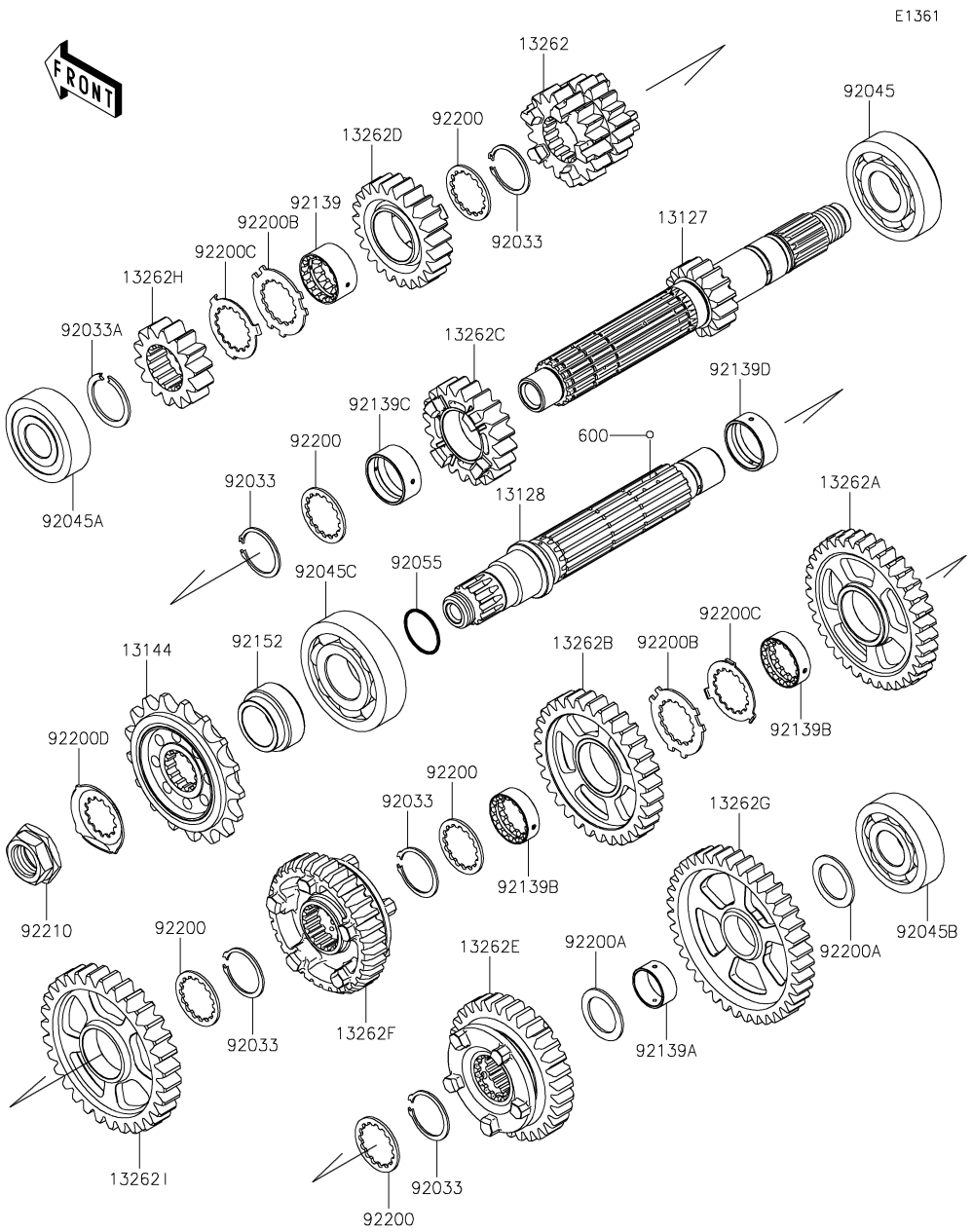

Ref. No.	Part No.	Description	Spec Code	Quantity-ZX1000 '16 SGF	'16 SGFA	'16 SGFB		
13127	13127-0671	SHAFT-TRANSMISSION INPUT,15T		1	1	1		
13128	13128-0670	SHAFT-TRANSMISSION OUTPUT		1	1	1		
13144	13144-0004	SPROCKET-OUTPUT,17T,#525		1	1	1		
13262	13262-1188	GEAR,INPUT 3RD&4TH,18T&18T		1	1	1		
13262A	13262-1192	GEAR,OUTPUT 3RD,35T		1	1	1		
13262B	13262-1193	GEAR,OUTPUT 4TH,31T		1	1	1		
13262C	13262-1203	GEAR,INPUT 5TH,20T		1	1	1		
13262D	13262-1204	GEAR,INPUT 6TH,23T		1	1	1		
13262E	13262-1205	GEAR,OUTPUT 5TH,31T		1	1	1		
13262F	13262-1206	GEAR,OUTPUT 6TH,32T		1	1	1		
13262G	13262-1207	GEAR,OUTPUT LOW,39T		1	1	1		
13262H	13262-1210	GEAR,INPUT 2ND,14T		1	1	1		
13262I	13262-1211	GEAR,OUTPUT 2ND,31T		1	1	1		
92033	92033-1037	RING-SNAP,25.9X30.6X1.2		5	5	5		
92033A	92033-1249	RING-SNAP,T=1.5		1	1	1		
92045	92045-0047	BEARING-BALL,830045-5SH2		1	1	1		
92045A	92045-0048	BEARING-BALL,DG2152RDDSH2		1	1	1		
92045B	92045-0156	BEARING-BALL,63/22LU		1	1	1		
92045C	92045-1189	BEARING-BALL,63/28		1	1	1		
92055	92055-1293	RING-O,21.5X1.5		1	1	1		
92139	92139-0036	BUSHING,GEAR,6TH IN		1	1	1		
92139A	92139-0038	BUSHING,GEAR,LOW OUT		1	1	1		
92139B	92139-0309	BUSHING,25.0X31.0X9.4		2	2	2		
92139C	92139-0324	BUSHING,28.1X31.0X13.5		1	1	1		
92139D	92139-0734	BUSHING,28.1X31.0X11.5		1	1	1		
92152	92152-0885	COLLAR		1	1	1		
92200	92200-0050	WASHER,28.3X34.0X1.6		5	5	5		
92200A	92200-0138	WASHER,22.1X32.0X1.4		2	2	2		
92200B	92200-1522	WASHER,25.8X40.5X1.5		2	2	2		
92200C	92200-1523	WASHER,25.2X37.0X1.0		2	2	2		
92200D	92200-1720	WASHER		1	1	1		
92210	92210-0850	NUT,20MM		1	1	1		
600	600A0500	BALL-STEEL,5/32		3	3	3		

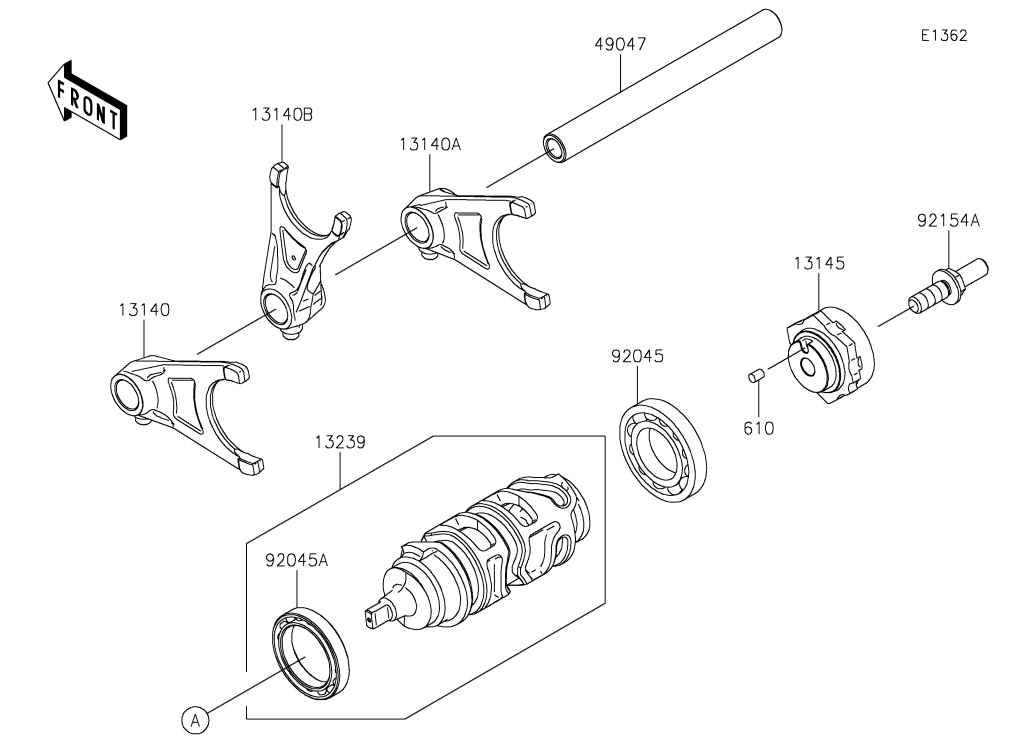

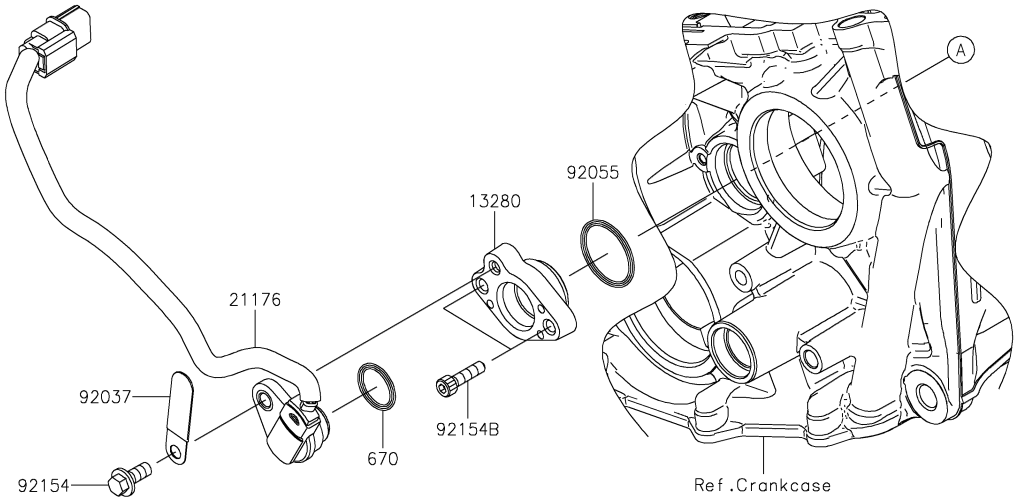

Ref. No.	Part No.	Description	Spec Code	Quantity-ZX1000 '16 SGF	'16 SGFA	'16 SGFB		
13140	13140-0064	FORK-SHIFT,OUTPUT,LH		1	1	1		
13140A	13140-0065	FORK-SHIFT,OUTPUT,RH		1	1	1		
13140B	13140-0650	FORK-SHIFT,INPUT,CNT		1	1	1		
13145	13145-0051	CAM-CHANGE DRUM		1	1	1		
13239	13239-0041	DRUM-ASSY-CHANGE		1	1	1		
13280	13280-0846	HOLDER,GEAR POSITION SENSOR		1	1	1		
21176	21176-0820	SENSOR,GEAR POSITION		1	1	1		
49047	49047-0623	ROD-SHIFT		1	1	1		
92037	92037-1539	CLAMP,L=45		1	1	1		
92045	92045-1045	BEARING-BALL,16005		1	1	1		
92045A	92045-1152	BEARING-BALL,6806		1	1	1		
92055	92055-091	RING-O,27.7X2.4		1	1	1		
92154	92154-1797	BOLT,FLANGED,6X14		1	1	1		
92154A	92154-1883	BOLT		1	1	1		
92154B	92154-2084	BOLT,SOCKET,5X20		2	2	2		
610	610A0406	ROLLER,4X6		1	1	1		
670	670D2018	O RING,18MM		1	1	1		

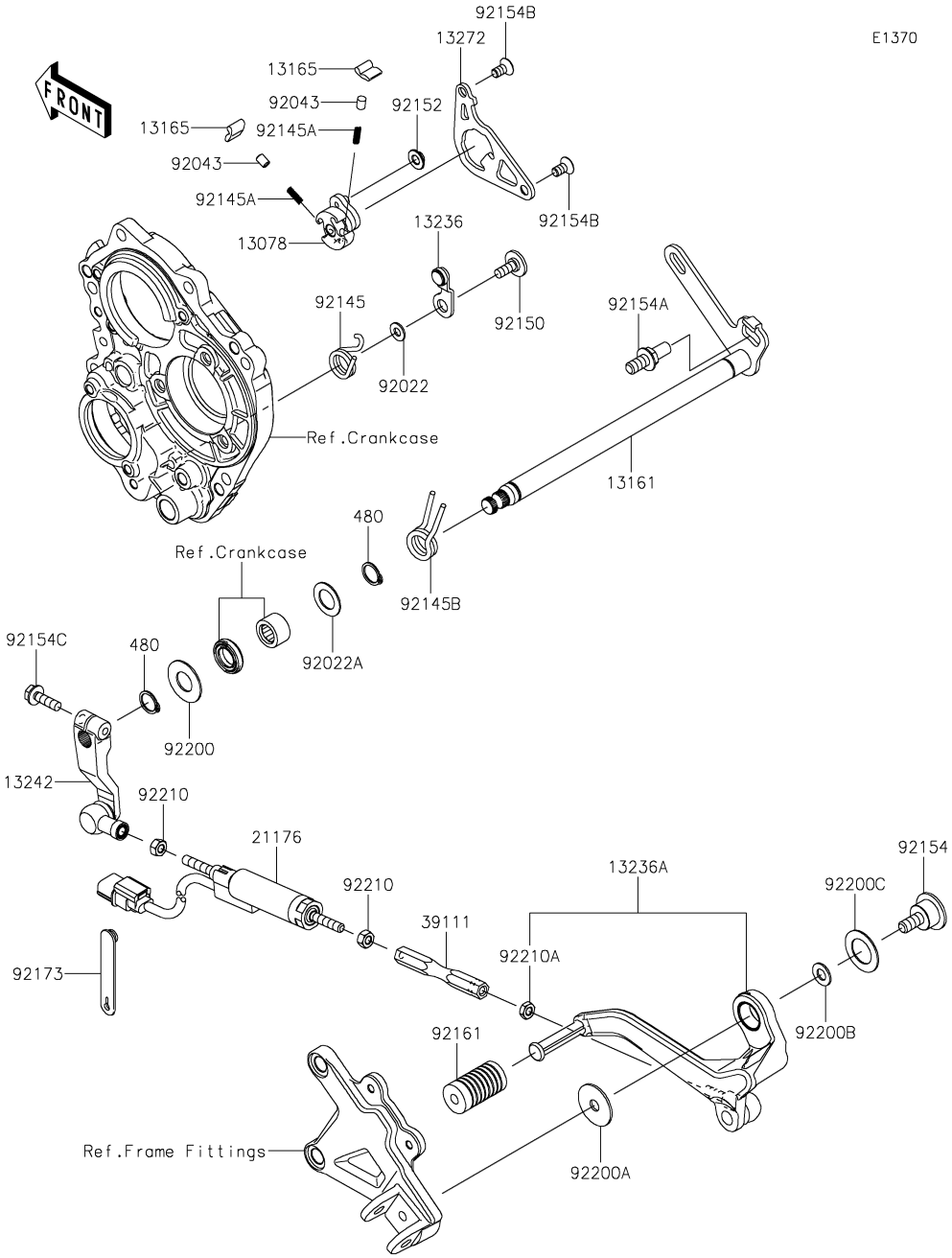

Ref. No.	Part No.	Description	Spec Code	Quantity-ZX1000 '16 SGF	'16 SGFA	'16 SGFB		
13078	13078-0012	RATCHET		1	1	1		
13161	13161-0078	LEVER-COMP-CHANGE SHAFT		1	1	1		
13165	13165-0018	PAWL		2	2	2		
13236	13236-0192	LEVER-COMP,POSITION		1	1	1		
13236A	13236-0769	LEVER-COMP,CHANGE PEDAL		1	1	1		
13242	13242-0128	LEVER-ASSY-CHANGE		1	1	1		
13272	13272-2171	PLATE		1	1	1		
21176	21176-0811	SENSOR,QUICK SHIFTER		1	1	1		
39111	39111-0338	ROD-TIE		1	1	1		
92022	92022-1827	WASHER,6X12.8X1.2		1	1	1		
92022A	92022-272	WASHER,14.3X24X1		1	1	1		
92043	92043-1676	PIN,PLUNGER		2	2	2		
92145	92145-0849	SPRING		1	1	1		
92145A	92145-1490	SPRING		2	2	2		
92145B	92145-1734	SPRING		1	1	1		
92150	92150-1673	BOLT,SOCKET,6X16		1	1	1		
92152	92152-1414	COLLAR		1	1	1		
92154	92154-1884	BOLT		1	1	1		
92154A	92154-1885	BOLT,RETURN SPRING		1	1	1		
92154B	92154-1886	BOLT,TORX,6X8.7		2	2	2		
92154C	92154-2090	BOLT,FLANGED,6X20		1	1	1		
92161	92161-0871	DAMPER		1	1	1		
92173	92173-1526	CLAMP		1	1	1		
92200	92200-0265	WASHER		1	1	1		
92200A	92200-0810	WASHER,8.2X30X1.5		1	1	1		
92200B	92200-0811	WASHER,8.2X18X1.2		1	1	1		
92200C	92200-0812	WASHER,18.3X30X1		1	1	1		
92210	92210-1100	NUT,6MM		2	2	2		
92210A	92210-1101	NUT,LEFT HANDED,6MM		1	1	1		
480	480J1400	CIRCLIP-TYPE-C,14MM		2	2	2		

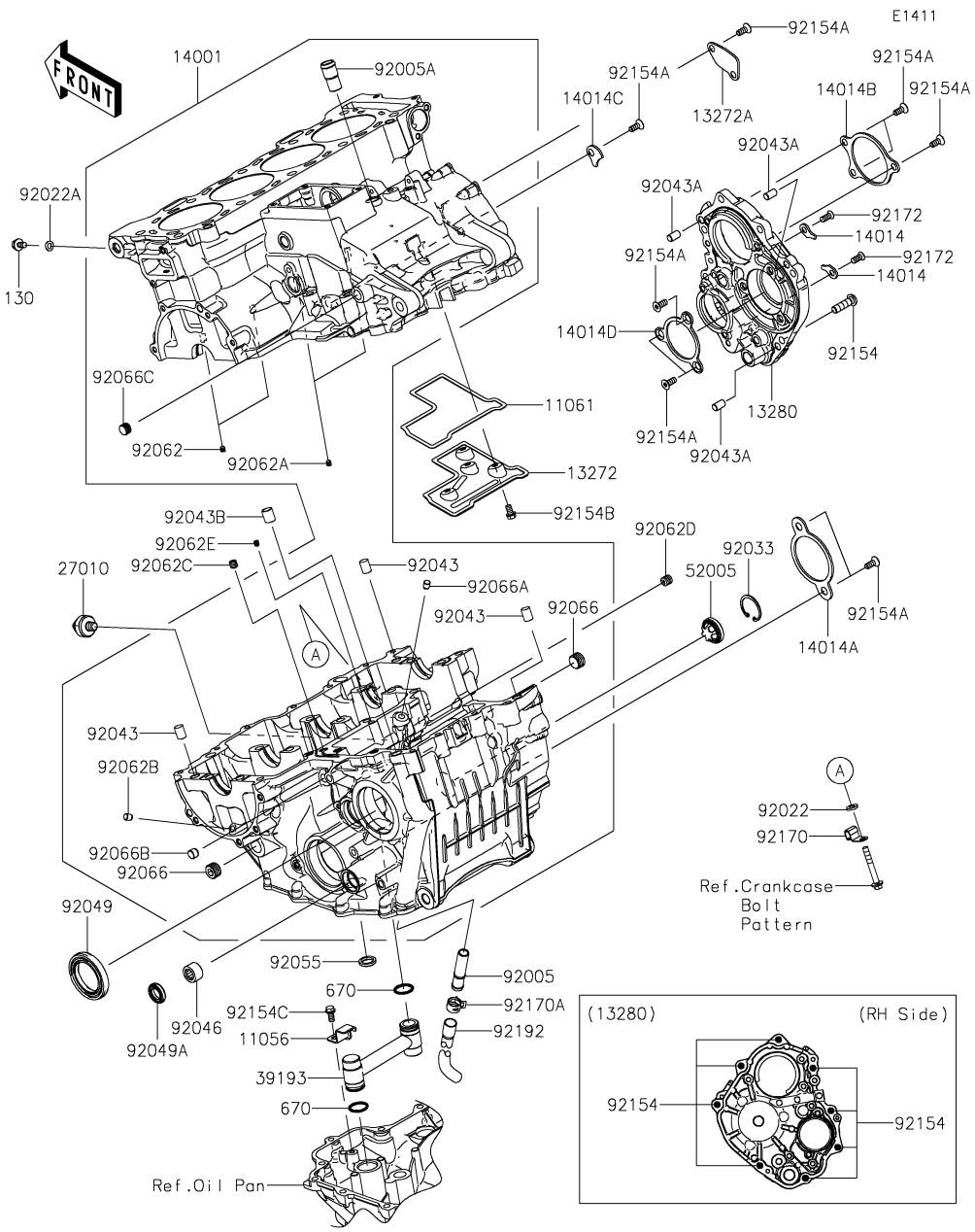

Ref. No.	Part No.	Description	Spec Code	Quantity-ZX1000 '16 SGF	'16 SGFA	'16 SGFB		
11056	11056-0189	BRACKET,OIL PIPE		1	1	1		
11061	11061-0435	GASKET,BREATHER ROOM		1	1	1		
13272	13272-0886	PLATE,BREATHER ROOM		1	1	1		
13272A	13272-0887	PLATE		1	1	1		
13280	13280-0859	HOLDER,TRANSMISSION		1	1	1		
14001	14001-0656	SET-CRANKCASE		1	1	1		
14014	14014-0042	PLATE-POSITION		2	2	2		
14014A	14014-0044	PLATE-POSITION		1	1	1		
14014B	14014-0046	PLATE-POSITION		1	1	1		
14014C	14014-0559	PLATE-POSITION		1	1	1		
14014D	14014-0560	PLATE-POSITION		1	1	1		
27010	27010-1313	SWITCH,OIL PRESSURE		1	1	1		
39193	39193-0061	PIPE-OIL		1	1	1		
52005	52005-1120	GAUGE		1	1	1		
92005	92005-0126	FITTING		1	1	1		
92005A	92005-1238	FITTING,BREATHER		1	1	1		
92022	92022-1523	WASHER,6.5X13X2.0		1	1	1		
92022A	92022-304	WASHER,6.2X11X1		1	1	1		
92033	92033-1305	RING-SNAP		1	1	1		
92043	92043-1506	PIN,10X14		3	3	3		
92043A	92043-1567	PIN,8X14		3	3	3		
92043B	92043-4009	PIN,10.1X12X14		1	1	1		
92046	92046-0043	BEARING-NEEDLE,HK1412FM		1	1	1		
92049	92049-0068	SEAL-OIL,TC38 57 8		1	1	1		
92049A	92049-1520	SEAL-OIL,TC14245		1	1	1		
92055	92055-0211	RING-O		1	1	1		
92062	92062-0004	NOZZLE		2	2	2		
92062A	92062-0010	NOZZLE		2	2	2		
92062B	92062-0012	NOZZLE		1	1	1		
92062C	92062-0020	NOZZLE,8X8		1	1	1		
92062D	92062-0021	NOZZLE,10X10		1	1	1		
92062E	92062-1081	NOZZLE,6X8,SILVER		1	1	1		
92066	92066-0839	PLUG		2	2	2		
92066A	92066-1012	PLUG,OIL LINE,7.2X8		1	1	1		
92066B	92066-1013	PLUG		1	1	1		
92066C	92066-1110	PLUG		1	1	1		
92154	92154-0415	BOLT,TORX,8X28		8	8	8		
92154A	92154-1821	BOLT,TORX,6X11.7		11	11	11		
92154B	92154-1887	BOLT,FLANGED,6X10		4	4	4		
92154C	92154-1888	BOLT,FLANGED-SMALL,6X12		1	1	1		

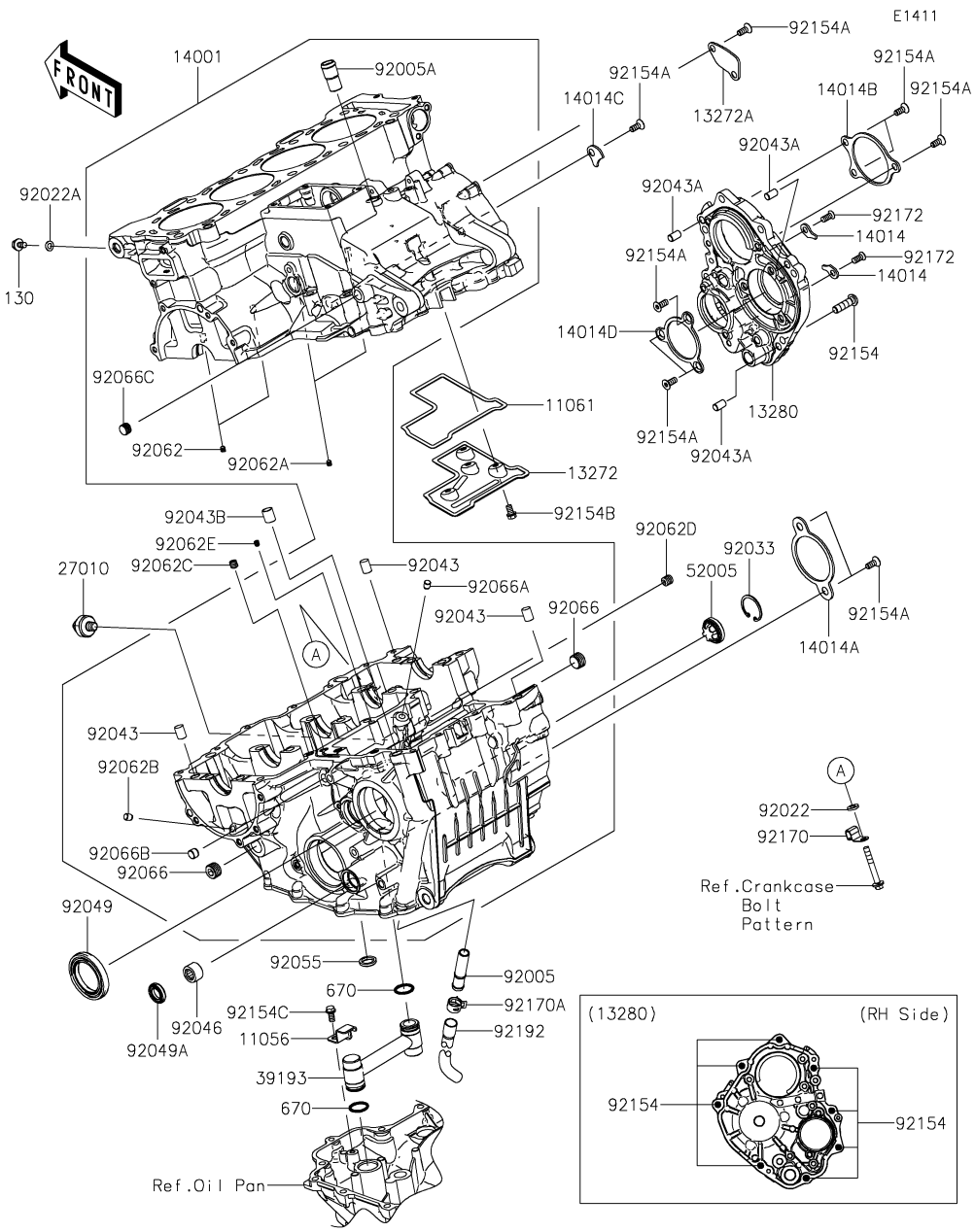

Ref. No.	Part No.	Description	Spec Code	Quantity-ZX1000 '16 SGF	'16 SGFA	'16 SGFB		
92170	92170-1804	CLAMP		1	1	1		
92170A	92170-1938	CLAMP		1	1	1		
92172	92172-0961	SCREW,TORX,6X14		2	2	2		
92192	92192-0985	TUBE,10.5X13X80		1	1	1		
130	130BD0610	BOLT-FLANGED,6X10		1	1	1		
670	670D2018	O RING,18MM		2	2	2		

E1412

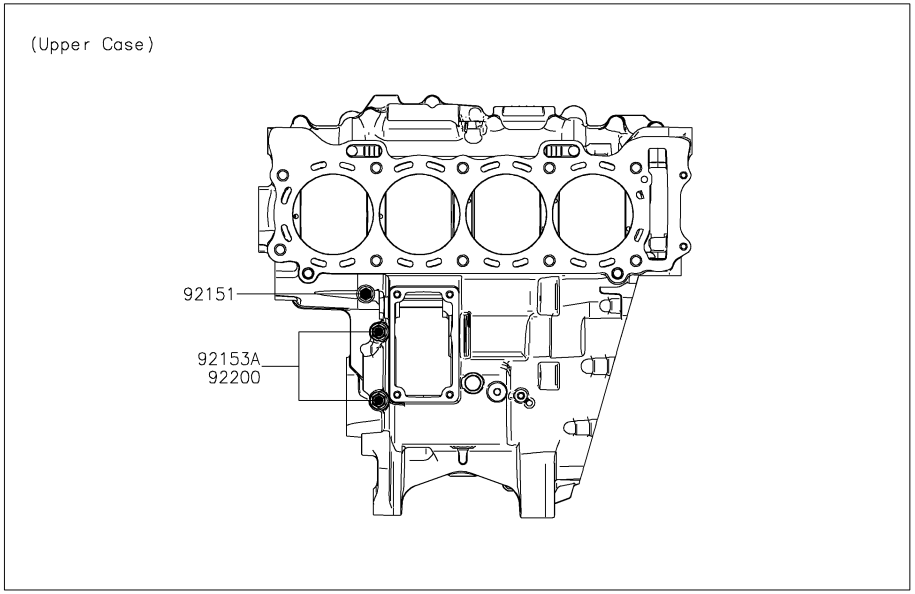

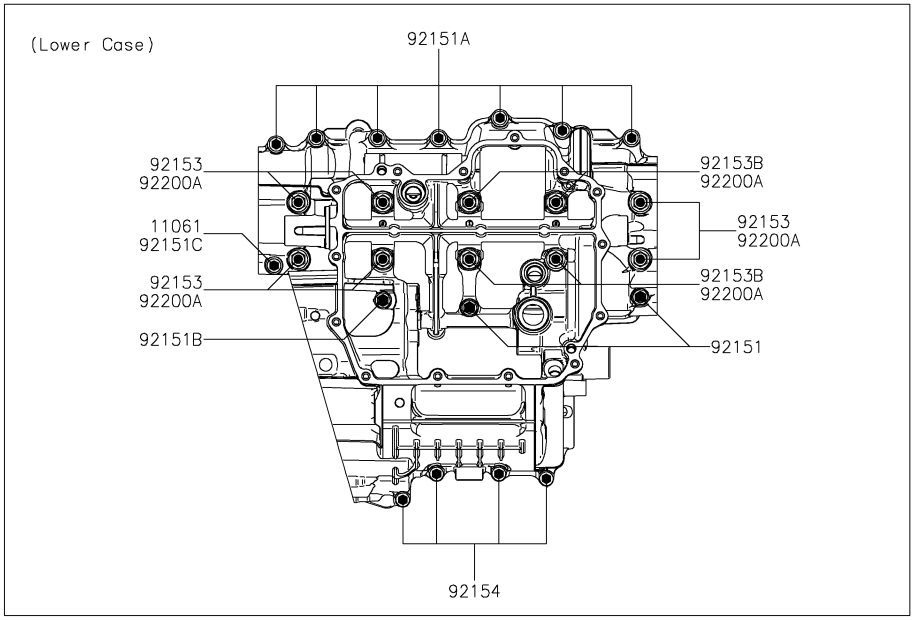

Ref. No.	Part No.	Description	Spec Code	Quantity-ZX1000 '16 SGF	'16 SGFA	'16 SGFB		
11061	11061-0262	GASKET,6.2X13.5X1.0		1	1	1		
92151	92151-1223	BOLT,FLANGED,7X50		3	3	3		
92151A	92151-1521	BOLT,FLANGED,6X45		7	7	7		
92151B	92151-1539	BOLT,FLANGED,7X45		1	1	1		
92151C	92151-1791	BOLT,6X60		1	1	1		
92153	92153-0447	BOLT,FLANGED,9X100		6	6	6		
92153A	92153-1110	BOLT,8X63		2	2	2		
92153B	92153-1449	BOLT,FLANGED,9X113		4	4	4		
92154	92154-0861	BOLT,FLANGED,6X40		4	4	4		
92200	92200-0047	WASHER,8.2X16X1.6		2	2	2		
92200A	92200-0115	WASHER,9.2X19X2.3		10	10	10		

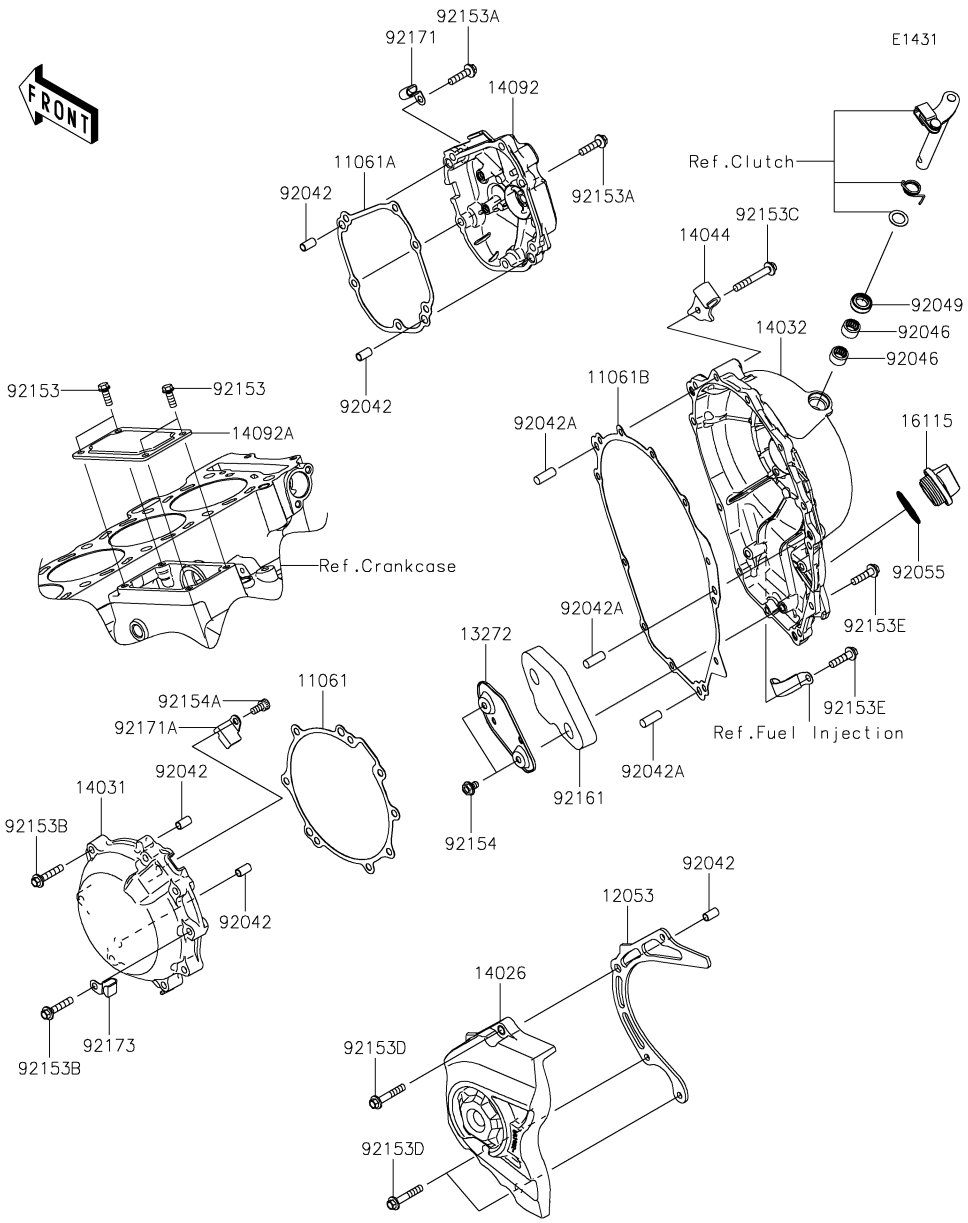

Ref. No.	Part No.	Description	Spec Code	Quantity-ZX1000 '16 SGF	'16 SGFA	'16 SGFB		
11061	11061-0441	GASKET,GENERATOR COVER		1	1	1		
11061A	11061-0442	GASKET,PULSER COVER		1	1	1		
11061B	11061-0735	GASKET		1	1	1		
12053	12053-0229	GUIDE-CHAIN		1	1	1		
13272	13272-0892	PLATE		1	1	1		
14026	14026-0124	COVER-CHAIN		1	1	1		
14031	14031-0555	COVER-GENERATOR		1	1	1		
14032	14032-0560	COVER-CLUTCH		1	1	1		
14044	14044-0566	HOLDER-CABLE		1	1	1		
14092	14092-0152	COVER,PULSER		1	1	1		
14092A	14092-0153	COVER,STARTER		1	1	1		
16115	16115-1009	CAP-OIL FILLER		1	1	1		
92042	92042-007	PIN,DOWEL,6.3X8X14		5	5	5		
92042A	92042-044	PIN,DOWEL,8X22		3	3	3		
92046	92046-0034	BEARING-NEEDLE,HK1210FM		2	2	2		
92049	92049-1475	SEAL-OIL,CLUTCH RELEASE		1	1	1		
92055	92055-049	RING-O,31.5X2.6		1	1	1		
92153	92153-0695	BOLT,6X16		4	4	4		
92153A	92153-1569	BOLT,FLANGED,6X25		6	6	6		
92153B	92153-1574	BOLT,FLANGED,6X30		8	8	8		
92153C	92153-1575	BOLT,FLANGED,6X45		1	1	1		
92153D	92153-1579	BOLT,FLANGED,6X35		3	3	3		
92153E	92153-1716	BOLT,FLANGED,6X25		11	11	11		
92154	92154-0492	BOLT,FLANGED,6X10		2	2	2		
92154A	92154-1889	BOLT,SOCKET,6X12		1	1	1		
92161	92161-0873	DAMPER,CLUTCH COVER		1	1	1		
92171	92171-0534	CLAMP		1	1	1		
92171A	92171-0938	CLAMP		1	1	1		
92173	92173-0082	CLAMP		1	1	1		

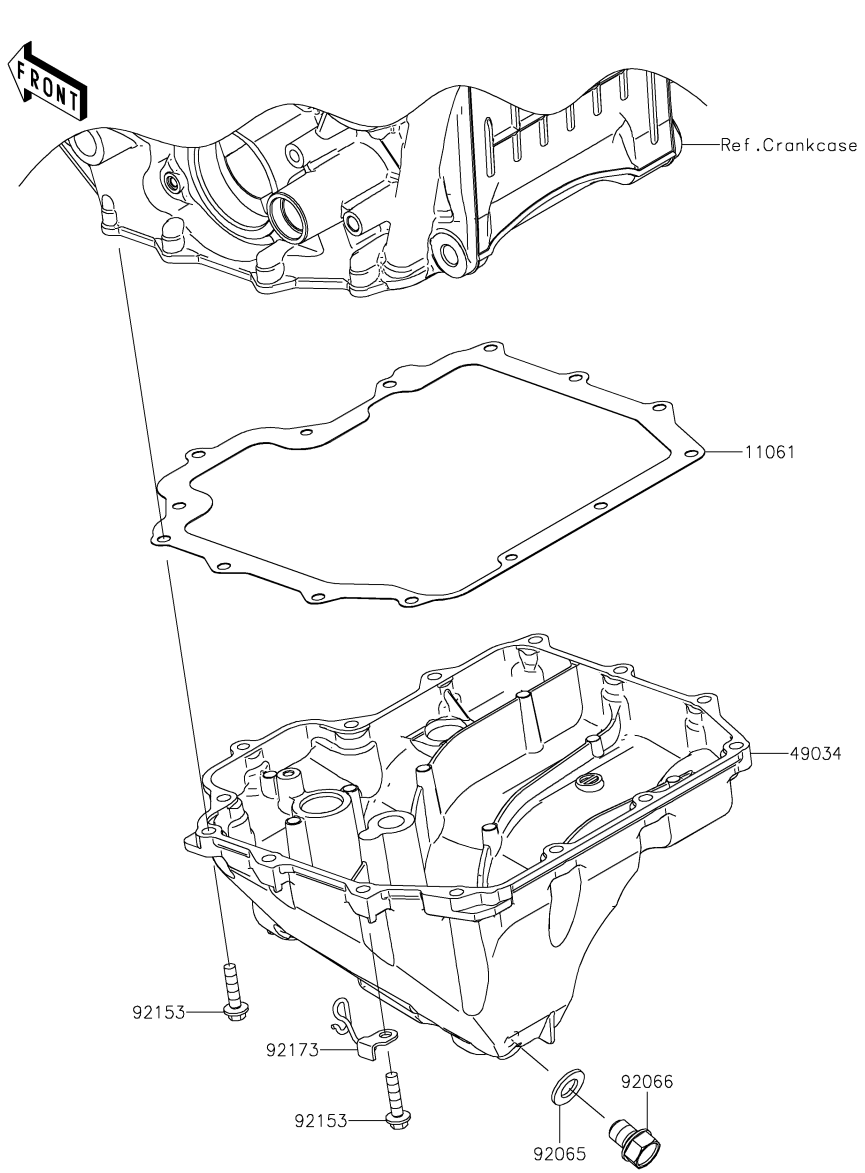

Ref. No.	Part No.	Description	Spec Code	Quantity-ZX1000 '16 SGF	'16 SGFA	'16 SGFB		
11061	11061-0747	GASKET,OIL PAN		1	1	1		
49034	49034-0564	PAN-OIL		1	1	1		
92065	92065-097	GASKET,12X22X2		1	1	1		
92066	92066-0079	PLUG,12X15		1	1	1		
92153	92153-1569	BOLT,FLANGED,6X25		14	14	14		
92173	92173-1555	CLAMP		1	1	1		

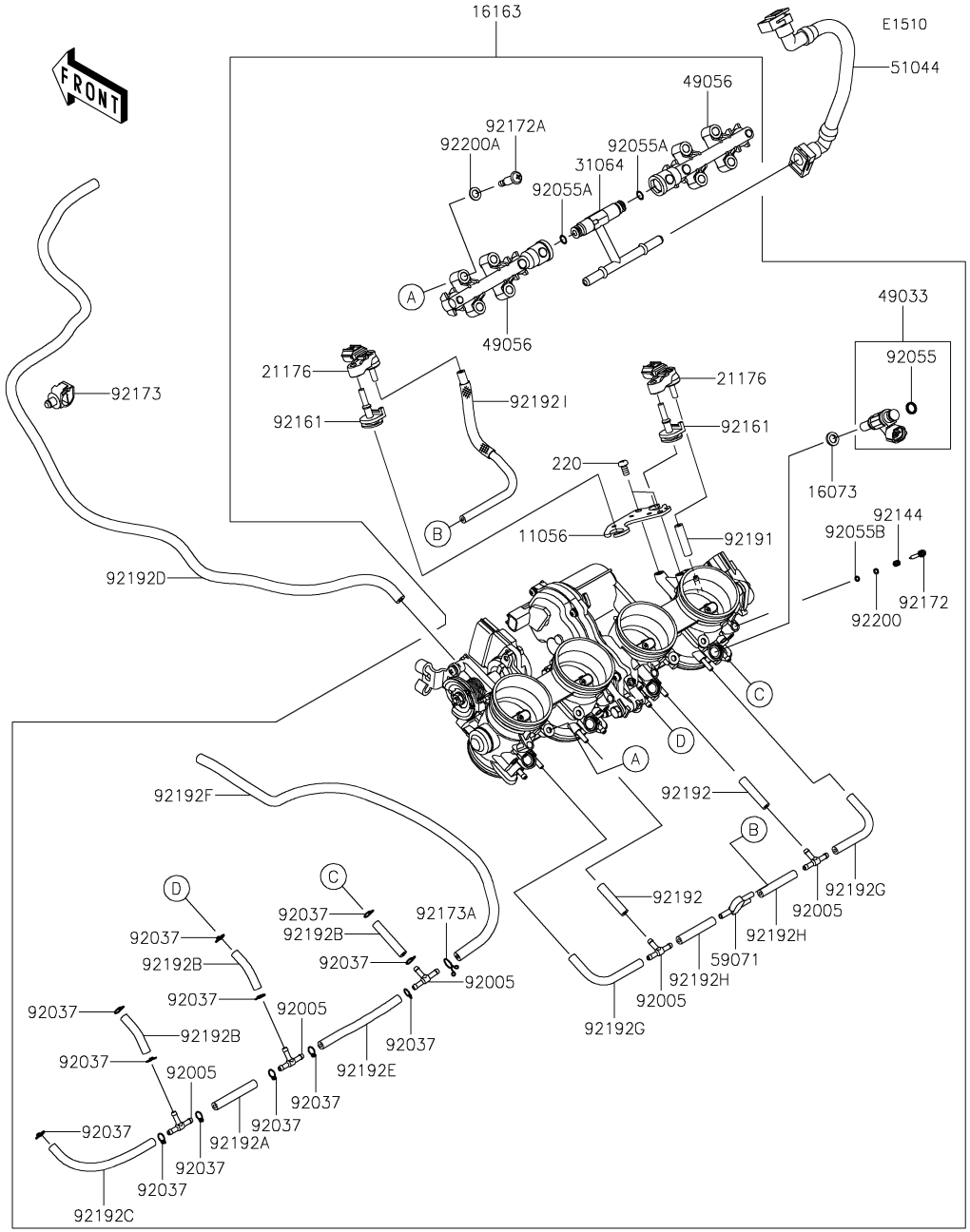

Ref. No.	Part No.	Description	Spec Code	Quantity-ZX1000 '16 SGF	'16 SGFA	'16 SGFB		
11056	11056-7844	BRACKET		1	1	1		
16073	16073-0848	INSULATOR		4	4	4		
16163	16163-0863	THROTTLE-ASSY		1	1	1		
21176	21176-0111	SENSOR,PRESSURE		2	2	2		
31064	31064-0686	PIPE-COMP		1	1	1		
49033	49033-0027	NOZZLE-INJECTION		4	4	4		
49056	49056-0046	PIPE-INJECTION		2	2	2		
51044	51044-0120	TUBE-ASSY,FUEL		1	1	1		
59071	59071-0022	JOINT		1	1	1		
92005	92005-1380	FITTING		5	5	5		
92037	92037-1124	CLAMP,TUBE		12	12	12		
92055	92055-0124	RING-O,INJECTION NOZZLE		4	4	4		
92055A	92055-0761	RING-O		2	2	2		
92055B	92055-0840	RING-O		4	4	4		
92144	92144-1674	SPRING,THROTTLE STOP SCREW		4	4	4		
92161	92161-0673	DAMPER		2	2	2		
92172	92172-0156	SCREW		4	4	4		
92172A	92172-0828	SCREW,PIPE INJECTION		4	4	4		
92173	92173-0736	CLAMP,12MM DIA.		1	1	1		
92173A	92173-1568	CLAMP		1	1	1		
92191	92191-1550	TUBE,3.2X7.4X30		1	1	1		
92192	92192-1234	TUBE,3.2X7.4X35		2	2	2		
92192A	92192-1349	TUBE,3.5X7.5X55		1	1	1		
92192B	92192-1494	TUBE,3.5X7.5X40		3	3	3		
92192C	92192-1497	TUBE,3.5X7.5X125		1	1	1		
92192D	92192-1499	TUBE		1	1	1		
92192E	92192-1521	TUBE,3.5X7.5X100		1	1	1		
92192F	92192-1612	TUBE,L=450		1	1	1		
92192G	92192-1616	TUBE,3.2X7.4X85		2	2	2		
92192H	92192-1617	TUBE,3.2X7.4X45		2	2	2		
92192I	92192-1618	TUBE,3.2X7.4X200		1	1	1		
92200	92200-1564	WASHER,PILOT AIR SCREW		4	4	4		
92200A	92200-3807	WASHER		4	4	4		
220	220AA0510	SCREW-PAN-CROS,5X10		2	2	2		

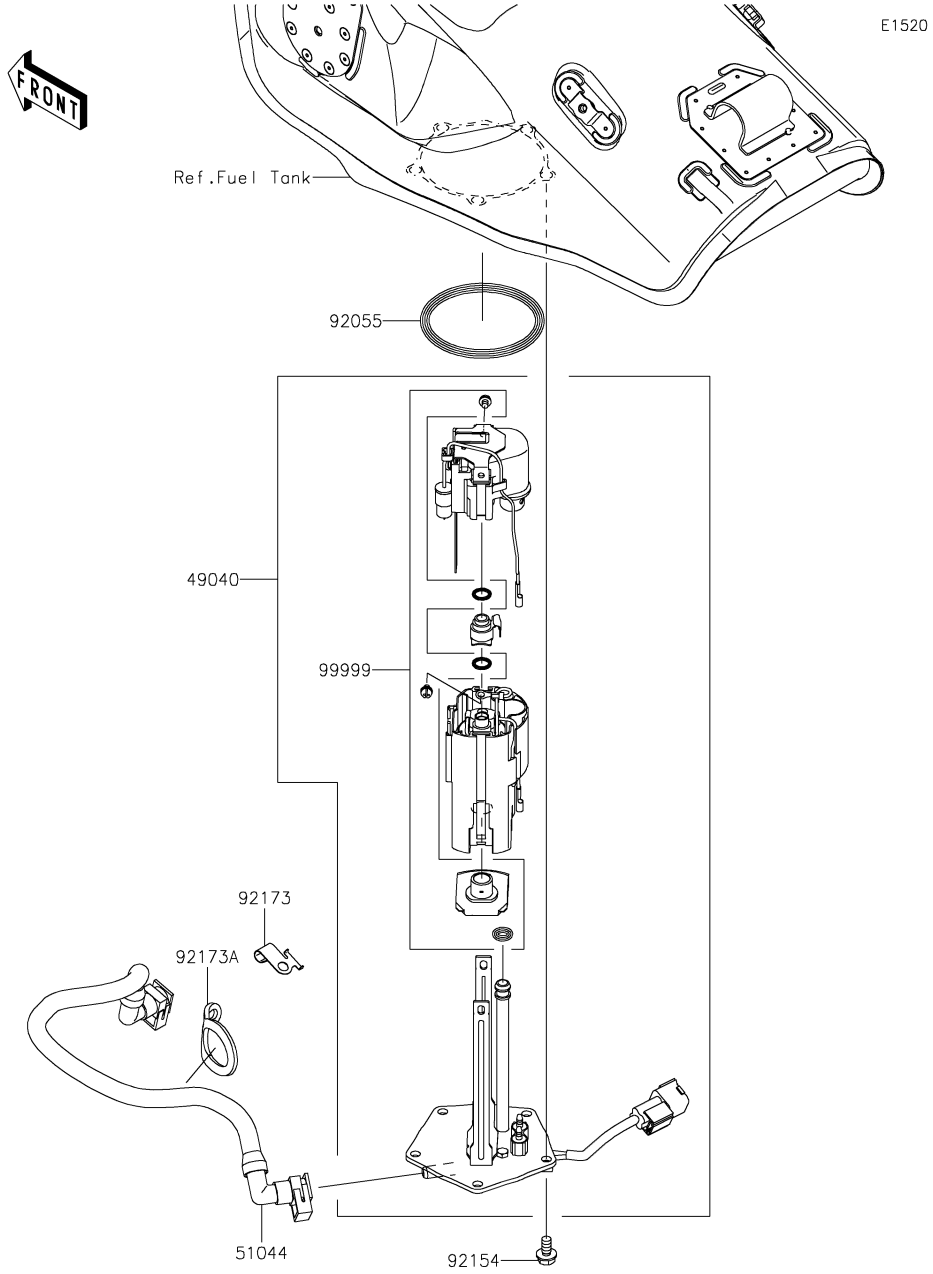

Ref. No.	Part No.	Description	Spec Code	Quantity-ZX1000 '16 SGF	'16 SGFA	'16 SGFB		
49040	49040-0750	PUMP-FUEL		1	1	1		
51044	51044-0118	TUBE-ASSY,FUEL		1	1	1		
92055	92055-0210	RING-O,70.6X5.7		1	1	1		
92154	92154-1848	BOLT,FLANGED,6X12		5	5	5		
92173	92173-0831	CLAMP		1	1	1		
92173A	92173-0832	CLAMP		1	1	1		
99999	99999-0521	KIT,FUEL FILTER		1	1	1		

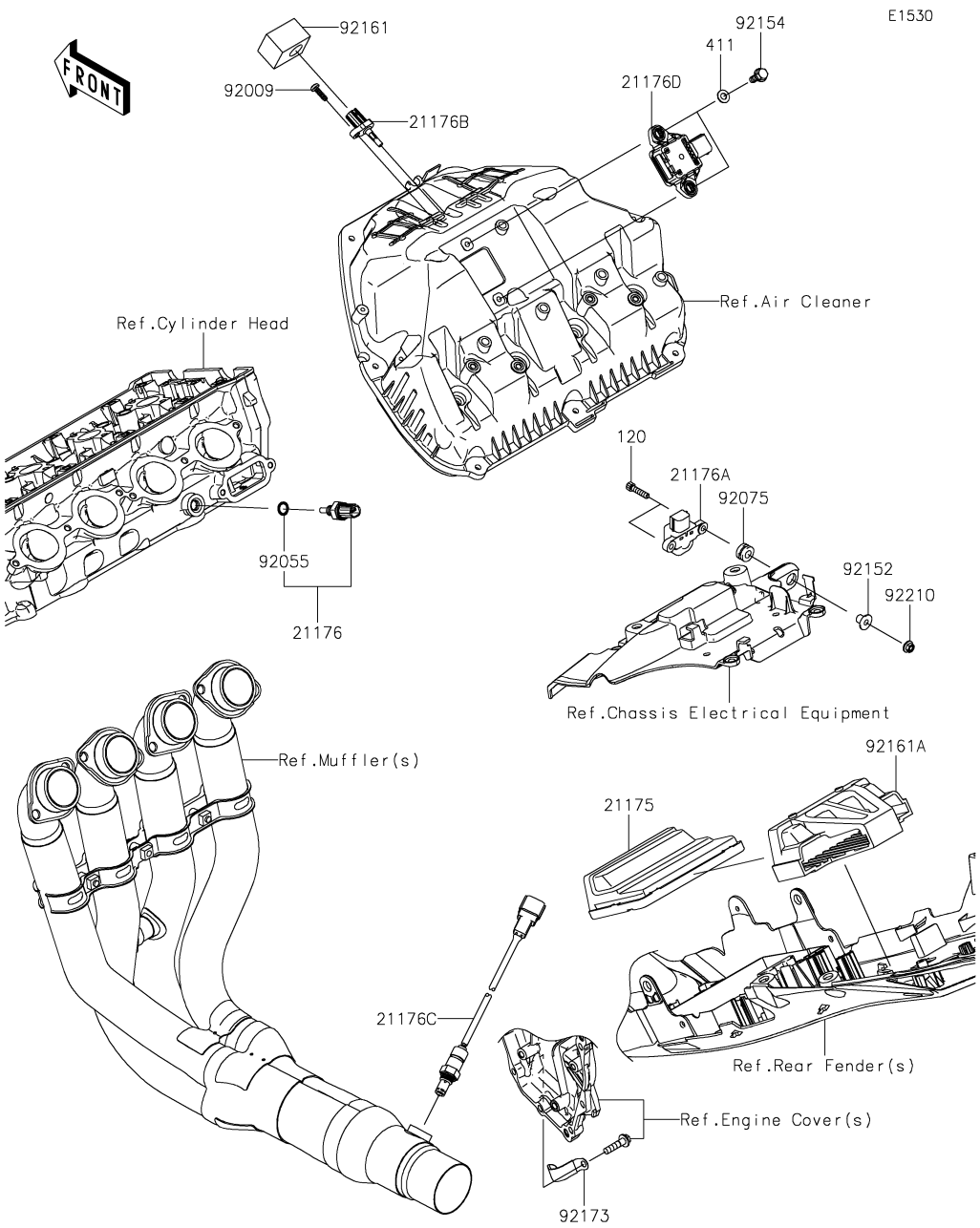

Ref. No.	Part No.	Description	Spec Code	Quantity-ZX1000 '16 SGF	'16 SGFA	'16 SGFB		
21175	21175-1118	CONTROL UNIT-ELECTRONIC		1	1	1		
21176	21176-0009	SENSOR,WATER TEMP		1	1	1		
21176A	21176-0026	SENSOR,VEHICLE-DOWN		1	1	1		
21176B	21176-0048	SENSOR,AIR TEMPERATURE		1	1	1		
21176C	21176-0789	SENSOR,OXYGEN		1	1	1		
21176D	21176-0819	SENSOR,GYRO		1	1	1		
92009	92009-1984	SCREW,TAPPING,5X16		1	1	1		
92055	92055-0016	RING-O,9.5X1.9		1	1	1		
92075	92075-1912	DAMPER		2	2	2		
92152	92152-1969	COLLAR		2	2	2		
92154	92154-1851	BOLT,FLANGED,6X16		2	2	2		
92161	92161-0985	DAMPER		1	1	1		
92161A	92161-1719	DAMPER,ECU		1	1	1		
92173	92173-1549	CLAMP		1	1	1		
92210	92210-0950	NUT,FLANGED,5MM		2	2	2		
120	120R0522	BOLT-SOCKET,5X22		2	2	2		
411	411S0600	WASHER-PLAIN,6MM		2	2	2		

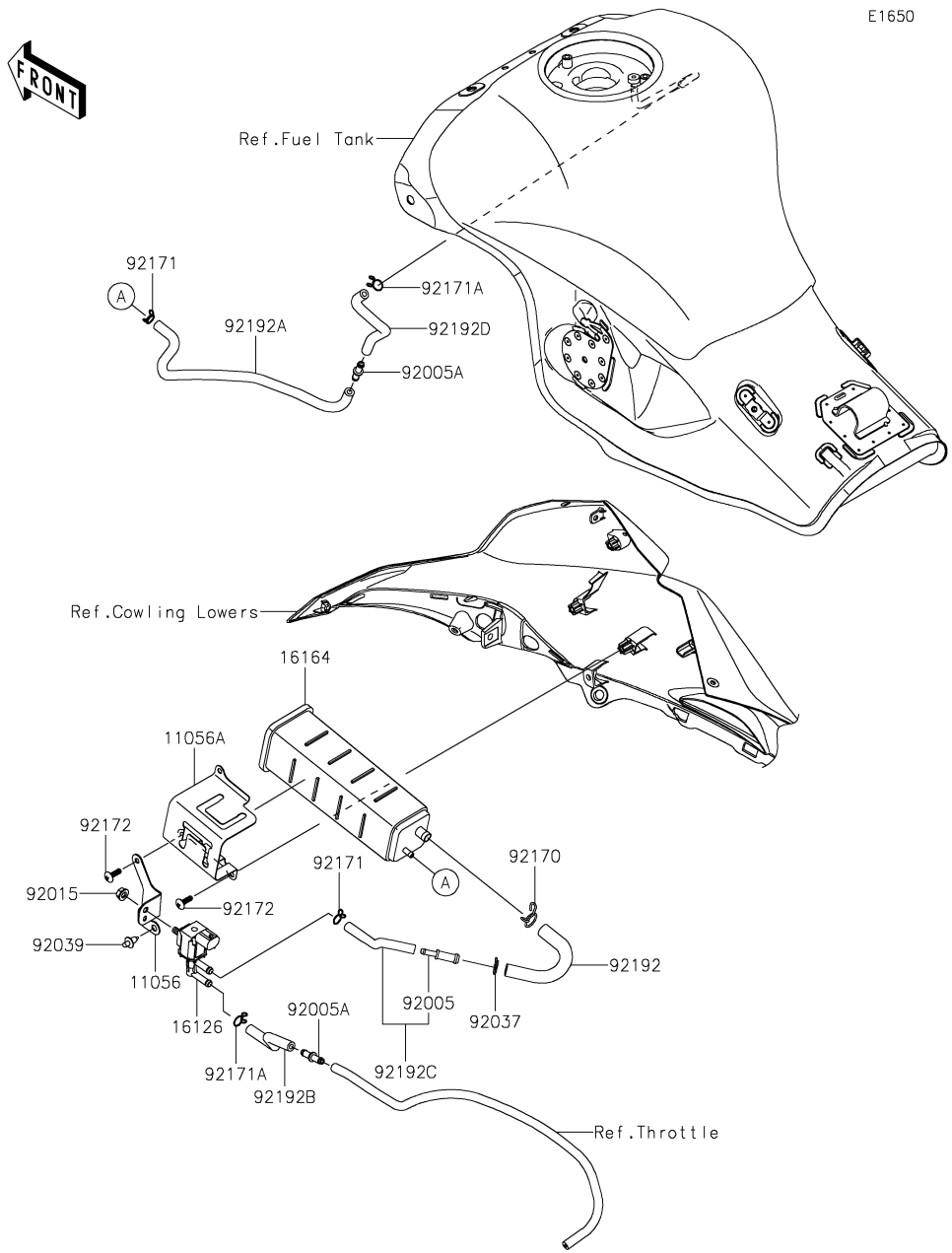

Ref. No.	Part No.	Description	Spec Code	Quantity-ZX1000 '16 SGF	'16 SGFA	'16 SGFB		
11056	11056-7697	BRACKET,SOLENOID VALVE		1	1	1		
11056A	11056-7751	BRACKET,CANISTER		1	1	1		
16126	16126-0705	VALVE,SOLENOID		1	1	1		
16164	16164-0009	CANISTER		1	1	1		
92005	92005-0032	FITTING		1	1	1		
92005A	92005-0721	FITTING		2	2	2		
92015	92015-1367	NUT,FLANGED,6MM		1	1	1		
92037	92037-1271	CLAMP,12.5MM		1	1	1		
92039	92039-0068	RIVET		1	1	1		
92170	92170-1695	CLAMP		1	1	1		
92171	92171-0576	CLAMP		2	2	2		
92171A	92171-0718	CLAMP		2	2	2		
92172	92172-0175	SCREW,TAPPING,5X16		2	2	2		
92192	92192-1502	TUBE,TUBE(VALVE)-CANISTER		1	1	1		
92192A	92192-1503	TUBE,CANISTER-FITTING(TANK)		1	1	1		
92192B	92192-1504	TUBE,VALVE-THROTTLE BODY		1	1	1		
92192C	92192-1505	TUBE,VALVE-TUBE(CANISTER)		1	1	1		
92192D	92192-1506	TUBE,FITTING(CANISTER)-TANK		1	1	1		

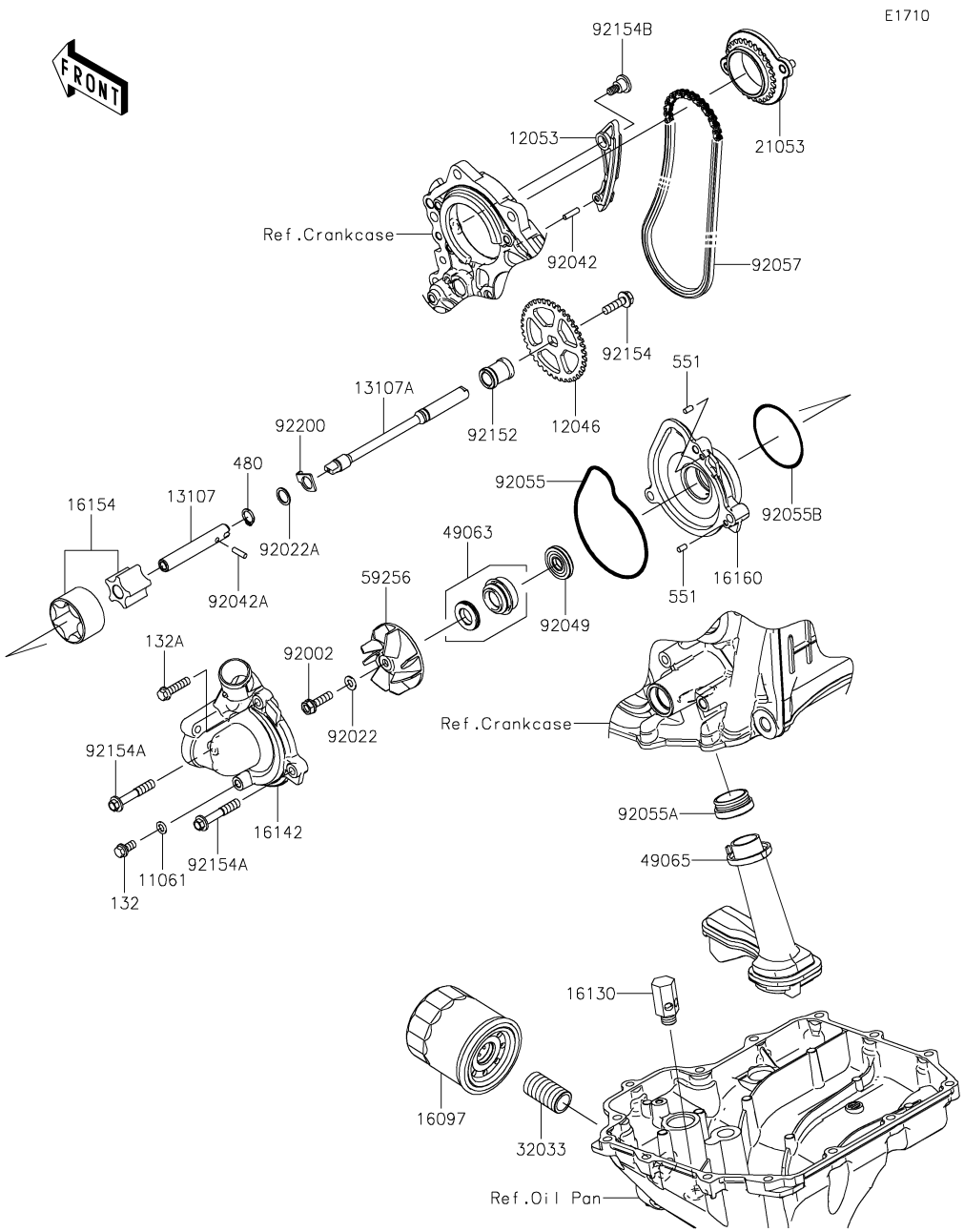

Ref. No.	Part No.	Description	Spec Code	Quantity-ZX1000 '16 SGF	'16 SGFA	'16 SGFB		
11061	11061-0107	GASKET		1	1	1		
12046	12046-0094	SPROCKET,OIL PUMP,38T		1	1	1		
12053	12053-0181	GUIDE-CHAIN		1	1	1		
13107	13107-0230	SHAFT,LH		1	1	1		
13107A	13107-0838	SHAFT,RH		1	1	1		
16097	16097-0011	FILTER-ASSY-OIL		1	1	1		
16130	16130-0005	VALVE-ASSY-RELIEF		1	1	1		
16142	16142-0734	COVER-PUMP,WATER		1	1	1		
16154	16154-0708	ROTOR-PUMP		1	1	1		
16160	16160-0226	BODY,WATER PUMP		1	1	1		
21053	21053-0007	SPROCKET-ASSY,PUMP DRIVE,29T		1	1	1		
32033	32033-1535	PIPE,OIL FILTER		1	1	1		
49063	49063-1055	SEAL-MECHANICAL,WATER		1	1	1		
49065	49065-0042	FILTER-OIL		1	1	1		
59256	59256-0011	IMPELLER		1	1	1		
92002	92002-1154	BOLT,6X22		1	1	1		
92022	92022-077	WASHER,6.1X12X1		1	1	1		
92022A	92022-311	WASHER,11.2X15X1		1	1	1		
92042	92042-014	PIN,DOWEL,4X15.8		1	1	1		
92042A	92042-030	PIN,DOWEL,4X13.8		1	1	1		
92049	92049-0778	SEAL-OIL		1	1	1		
92055	92055-0208	RING-O,WATER PUMP		1	1	1		
92055A	92055-1503	RING-O,OIL FILTER		1	1	1		
92055B	92055-1520	RING-O,52.6X2.4		1	1	1		
92057	92057-0674	CHAIN,PUMP DRIVE		1	1	1		
92152	92152-0865	COLLAR		1	1	1		
92154	92154-0387	BOLT,FLANGED,6X22		1	1	1		
92154A	92154-1890	BOLT,FLANGED,6X40		2	2	2		
92154B	92154-1891	BOLT,6MM		1	1	1		
92200	92200-1771	WASHER		1	1	1		
132	132BC0612	BOLT-FLANGED-SMALL,6X12		1	1	1		
132A	132BC0625	BOLT-FLANGED-SMALL,6X25		1	1	1		
480	480J1100	CIRCLIP-TYPE-C,11MM		1	1	1		
551	551A0408	PIN-DOWEL,4X8		2	2	2		

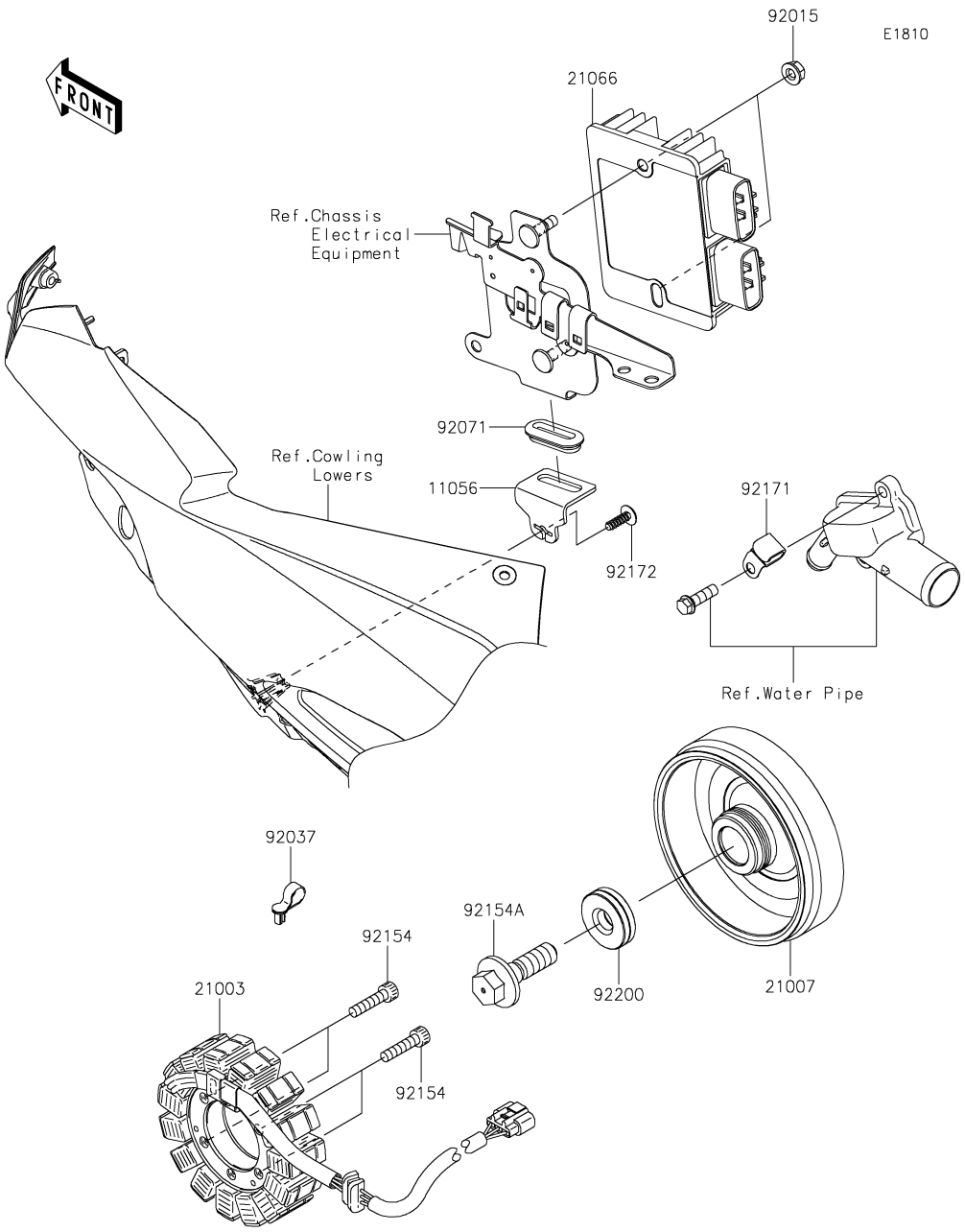

Ref. No.	Part No.	Description	Spec Code	Quantity-ZX1000 '16 SGF	'16 SGFA	'16 SGFB		
11056	11056-7812	BRACKET,REGULATOR		1	1	1		
21003	21003-0107	STATOR		1	1	1		
21007	21007-0591	ROTOR		1	1	1		
21066	21066-0748	REGULATOR-VOLTAGE		1	1	1		
92015	92015-1367	NUT,FLANGED,6MM		2	2	2		
92037	92037-1290	CLAMP,SPEED,L=43		1	1	1		
92071	92071-1187	GROMMET		1	1	1		
92154	92154-0477	BOLT,SOCKET,6X25		4	4	4		
92154A	92154-1944	BOLT,12X40		1	1	1		
92171	92171-0534	CLAMP		1	1	1		
92172	92172-0175	SCREW,TAPPING,5X16		1	1	1		
92200	92200-0369	WASHER,12X34X9		1	1	1		

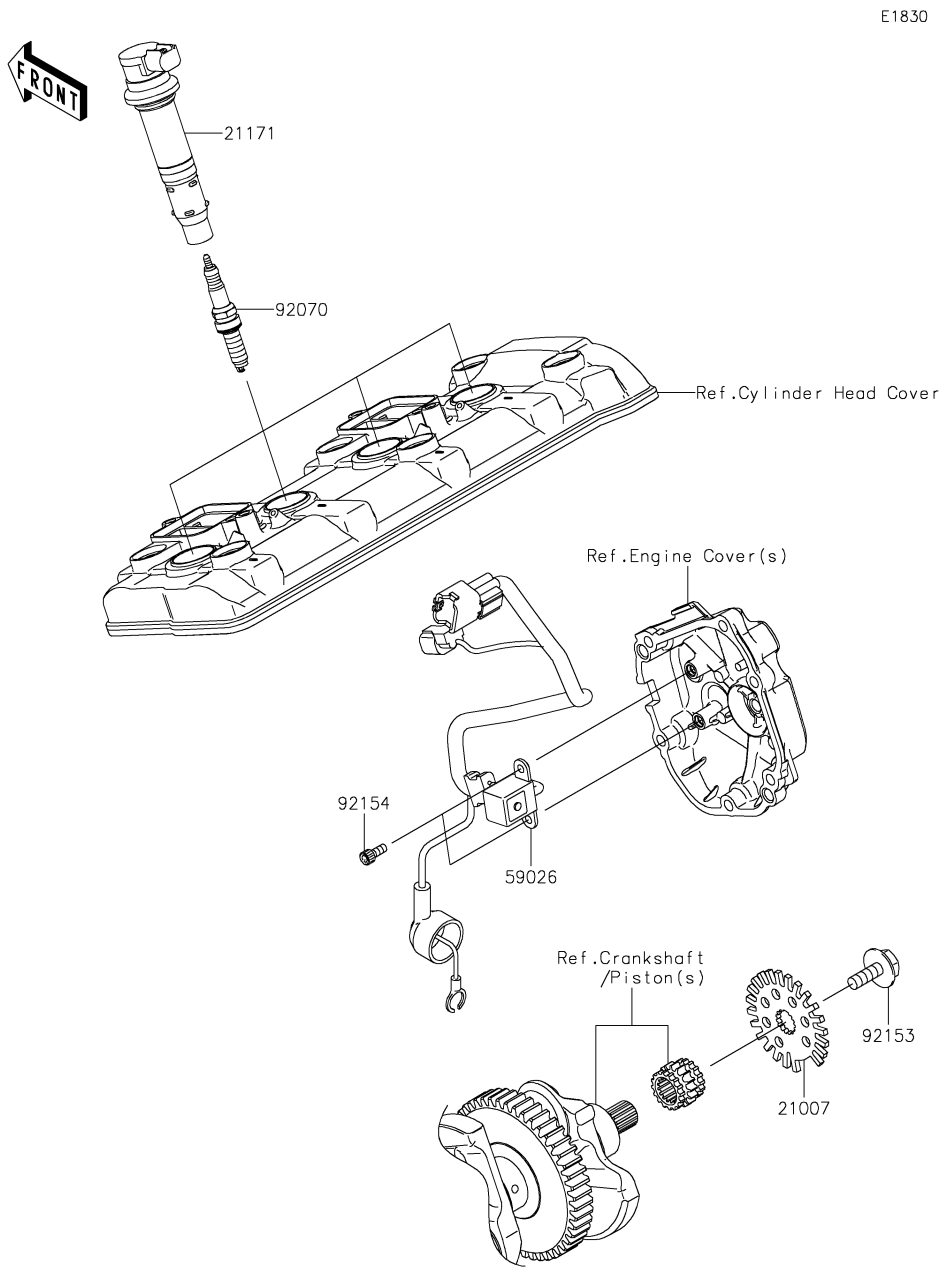

Ref. No.	Part No.	Description	Spec Code	Quantity-ZX1000				
				'16	'16	'16		
				SGF	SGFA	SGFB		
21007	21007-0019	ROTOR,PULSING		1	1	1		
21171	21171-0741	COIL-ASSY-IGNITION		4	4	4		
59026	59026-0044	COIL-PULSING		1	1	1		
92070	92070-0047	PLUG-SPARK,SILMAR9B9(NGK)		4	4	4		
92153	92153-0549	BOLT,FLANGED,8X23		1	1	1		
92154	92154-0503	BOLT,SOCKET,5X12		2	2	2		

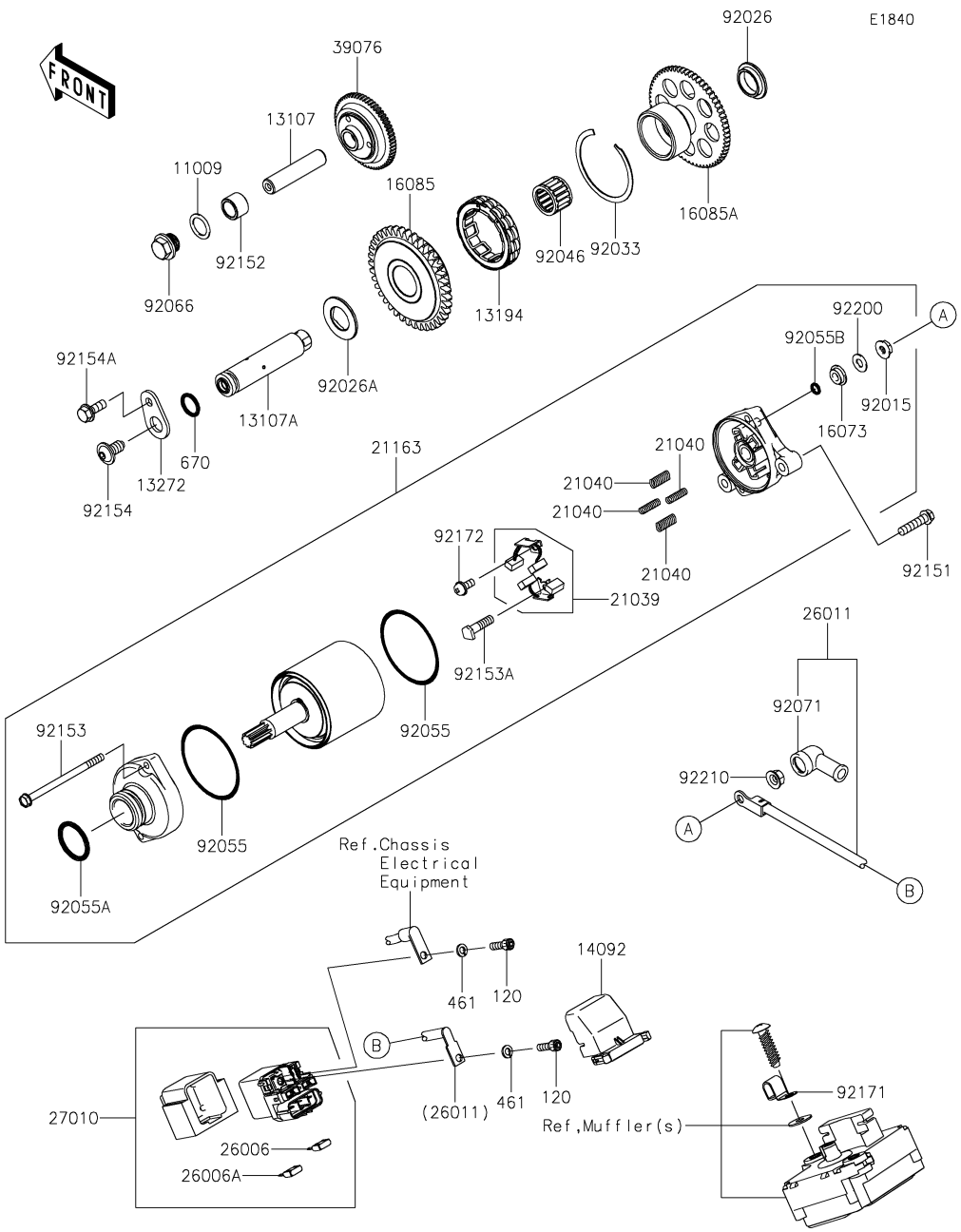

Ref. No.	Part No.	Description	Spec Code	Quantity-ZX1000 '16 SGF	'16 SGFA	'16 SGFB		
11009	11009-1238	GASKET,14.3X20X1		1	1	1		
13107	13107-0231	SHAFT		1	1	1		
13107A	13107-0837	SHAFT,ONEWAY CLUTCH		1	1	1		
13194	13194-0553	CLUTCH-ONEWAY		1	1	1		
13272	13272-1998	PLATE		1	1	1		
14092	14092-0109	COVER		1	1	1		
16073	16073-0053	INSULATOR		1	1	1		
16085	16085-0650	GEAR,39T		1	1	1		
16085A	16085-0651	GEAR,62T		1	1	1		
21039	21039-0004	BRUSH,CARBON		1	1	1		
21040	21040-0003	SPRING-BRUSH		4	4	4		
21163	21163-0064	STARTER-ELECTRIC		1	1	1		
26006	26006-0001	FUSE,MINI BLADE,15A,BLUE		1	1	1		
26006A	26006-1080	FUSE,MINI BLADE,30A,GREEN		1	1	1		
26011	26011-0308	WIRE-LEAD		1	1	1		
27010	27010-0773	SWITCH		1	1	1		
39076	39076-0554	LIMITER		1	1	1		
92015	92015-1476	NUT,STARTER MOTOR		1	1	1		
92026	92026-0157	SPACER,RH		1	1	1		
92026A	92026-0158	SPACER,LH		1	1	1		
92033	92033-3731	RING-SNAP		1	1	1		
92046	92046-0624	BEARING-NEEDLE,18X24X17		1	1	1		
92055	92055-0136	RING-O		2	2	2		
92055A	92055-1276	RING-O		1	1	1		
92055B	92055-1370	RING-O,4.5X2.0		1	1	1		
92066	92066-0837	PLUG,14X8		1	1	1		
92071	92071-0024	GROMMET		1	1	1		
92151	92151-1930	BOLT,FLANGED-SMALL,6X25		2	2	2		
92152	92152-0870	COLLAR,12.2X17X12		1	1	1		
92153	92153-1850	BOLT		2	2	2		
92153A	92153-1866	BOLT		1	1	1		
92154	92154-0397	BOLT,SOCKET,8X16		1	1	1		
92154A	92154-1851	BOLT,FLANGED,6X16		1	1	1		
92171	92171-0534	CLAMP		1	1	1		
92172	92172-0334	SCREW		1	1	1		
92200	92200-0386	WASHER		1	1	1		
92210	92210-0188	NUT,6MM		1	1	1		
120	120CB0510	BOLT-SOCKET,5X10		2	2	2		
461	461DB0500	WASHER-SPRING,5MM		2	2	2		
670	670D2014	O RING,14MM		1	1	1		

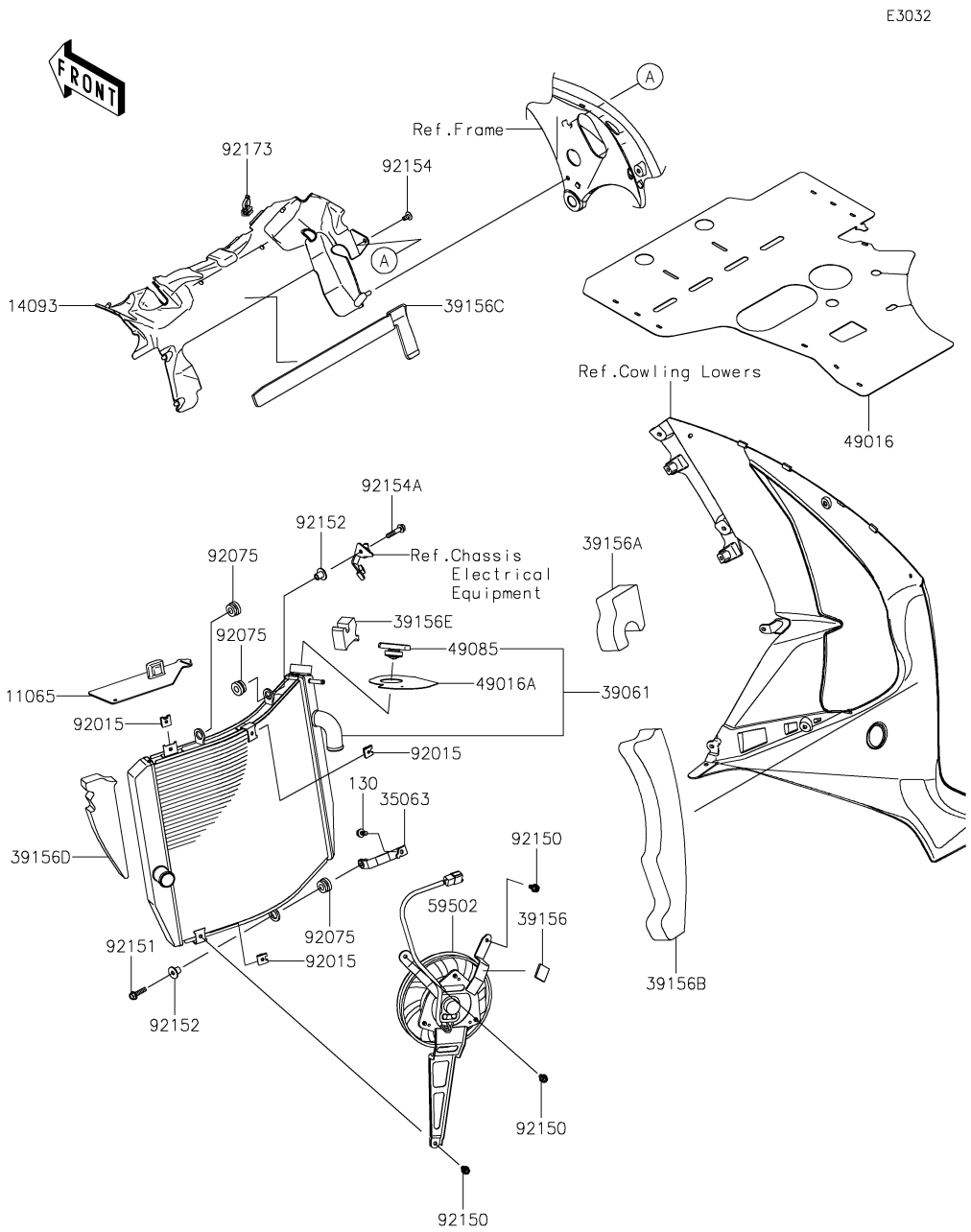

Ref. No.	Part No.	Description	Spec Code	Quantity-ZX1000 '16 SGF	'16 SGFA	'16 SGFB		
11065	11065-0737	CAP		1	1	1		
14093	14093-0427	COVER		1	1	1		
35063	35063-0701	STAY		1	1	1		
39061	39061-0566	RADIATOR-ASSY		1	1	1		
39156	39156-0285	PAD		1	1	1		
39156A	39156-0710	PAD		1	1	1		
39156B	39156-0724	PAD		1	1	1		
39156C	39156-0730	PAD		1	1	1		
39156D	39156-1941	PAD		1	1	1		
39156E	39156-1976	PAD		1	1	1		
49016	49016-0633	COVER-SEAL,ENGINE RR		1	1	1		
49016A	49016-0637	COVER-SEAL,RH		1	1	1		
49085	49085-1078	CAP-ASSY-PRESSURE		1	1	1		
59502	59502-0606	FAN-ASSY		1	1	1		
92015	92015-1487	NUT		3	3	3		
92075	92075-1123	DAMPER,RUBBER		3	3	3		
92150	92150-1186	BOLT,6X12		3	3	3		
92151	92151-1225	BOLT,FLANGED,6X25		1	1	1		
92152	92152-1074	COLLAR		2	2	2		
92154	92154-1892	BOLT,6X12		1	1	1		
92154A	92154-2119	BOLT,FLANGED,15X30		1	1	1		
92173	92173-1578	CLAMP		1	1	1		
130	130BA0614	BOLT-FLANGED,6X14		1	1	1		

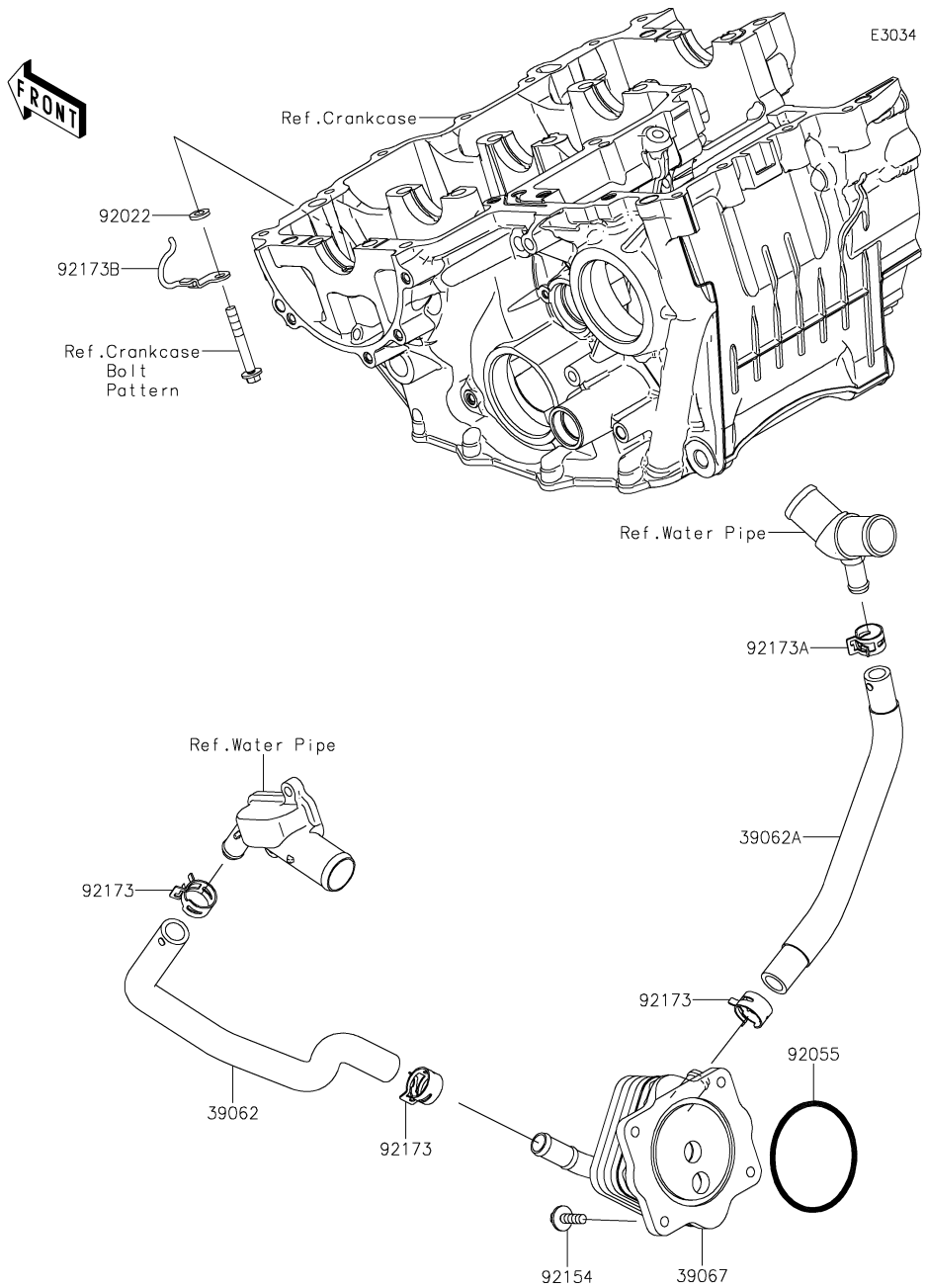

Ref. No.	Part No.	Description	Spec Code	Quantity-ZX1000 '16 SGF	'16 SGFA	'16 SGFB		
39062	39062-0739	HOSE,FITTING-OIL COOLER		1	1	1		
39062A	39062-0740	HOSE,OIL COOLER-3WAY PIPE		1	1	1		
39067	39067-0020	COOLER-OIL		1	1	1		
92022	92022-1523	WASHER,6.5X13X2.0		1	1	1		
92055	92055-0739	RING-O,63.3MM		1	1	1		
92154	92154-0403	BOLT,FLANGED,6X22		4	4	4		
92173	92173-1361	CLAMP,20.2MM		3	3	3		
92173A	92173-1552	CLAMP		1	1	1		
92173B	92173-1580	CLAMP		1	1	1		

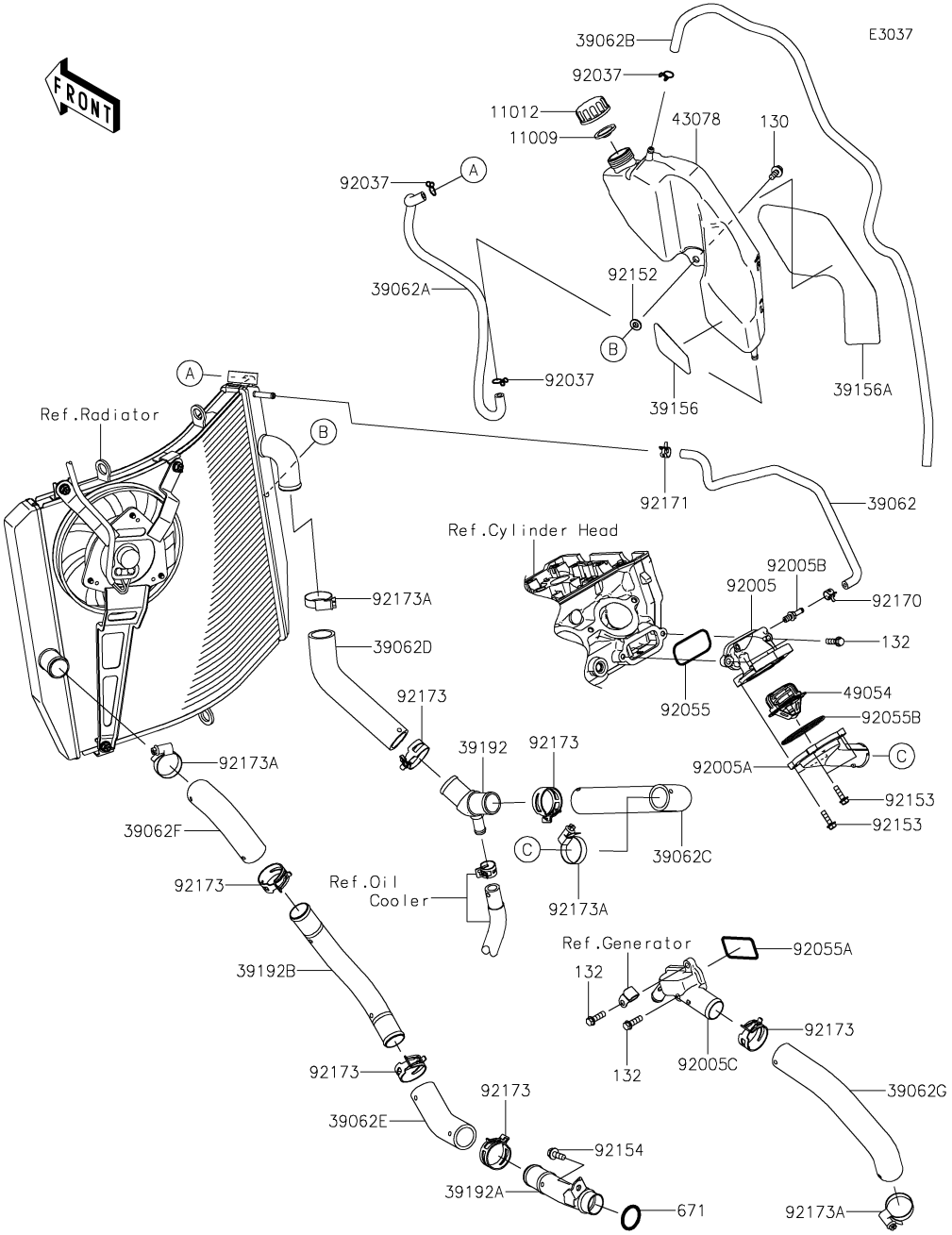

Ref. No.	Part No.	Description	Spec Code	Quantity-ZX1000 '16 SGF	'16 SGFA	'16 SGFB		
11009	11009-1145	GASKET,RESERVOIR TANK CAP		1	1	1		
11012	11012-1084	CAP		1	1	1		
39062	39062-0347	HOSE,THERMO CASE-RADIATOR		1	1	1		
39062A	39062-0629	HOSE-COOLING,RESERVOIR		1	1	1		
39062B	39062-0729	HOSE-COOLING,OVER FLOW		1	1	1		
39062C	39062-0734	HOSE,THERMO CAP-3WAY PIPE		1	1	1		
39062D	39062-0735	HOSE,3WAY PIPE-RADIATOR		1	1	1		
39062E	39062-0736	HOSE,PIPE(RAD.)-PIPE(W/PUMP)		1	1	1		
39062F	39062-0737	HOSE,RADIATOR-PIPE(WATER PUMP)		1	1	1		
39062G	39062-0738	HOSE,WATER PUMP-FITTING		1	1	1		
39156	39156-1965	PAD		1	1	1		
39156A	39156-1989	PAD		1	1	1		
39192	39192-0614	PIPE,3WAY		1	1	1		
39192A	39192-0617	PIPE,TUBE(RADIATOR)-WATER PUMP		1	1	1		
39192B	39192-0618	PIPE,TUBE(RADIATOR)-TUBE(PUMP)		1	1	1		
43078	43078-0581	RESERVOIR		1	1	1		
49054	49054-0004	THERMOSTAT		1	1	1		
92005	92005-0122	FITTING,THERMO CASE		1	1	1		
92005A	92005-0818	FITTING,THERMO CAP		1	1	1		
92005B	92005-0826	FITTING		1	1	1		
92005C	92005-0837	FITTING		1	1	1		
92037	92037-147	CLAMP,TUBE		3	3	3		
92055	92055-0021	RING-O,YP 27.6 57.6 1.9		1	1	1		
92055A	92055-0209	RING-O		1	1	1		
92055B	92055-0831	RING-O,53.5X2.6		1	1	1		
92152	92152-1414	COLLAR		1	1	1		
92153	92153-1588	BOLT,FLANGED,5X18		4	4	4		
92154	92154-1893	BOLT,FLANGED-SMALL,6X16		1	1	1		
92170	92170-1493	CLAMP		1	1	1		
92171	92171-0719	CLAMP		1	1	1		
92173	92173-1360	CLAMP,34MM		6	6	6		
92173A	92173-1548	CLAMP		4	4	4		
130	130BA0614	BOLT-FLANGED,6X14		1	1	1		
132	132BC0620	BOLT-FLANGED-SMALL,6X20		4	4	4		
671	671B2525	O RING,25MM		1	1	1		

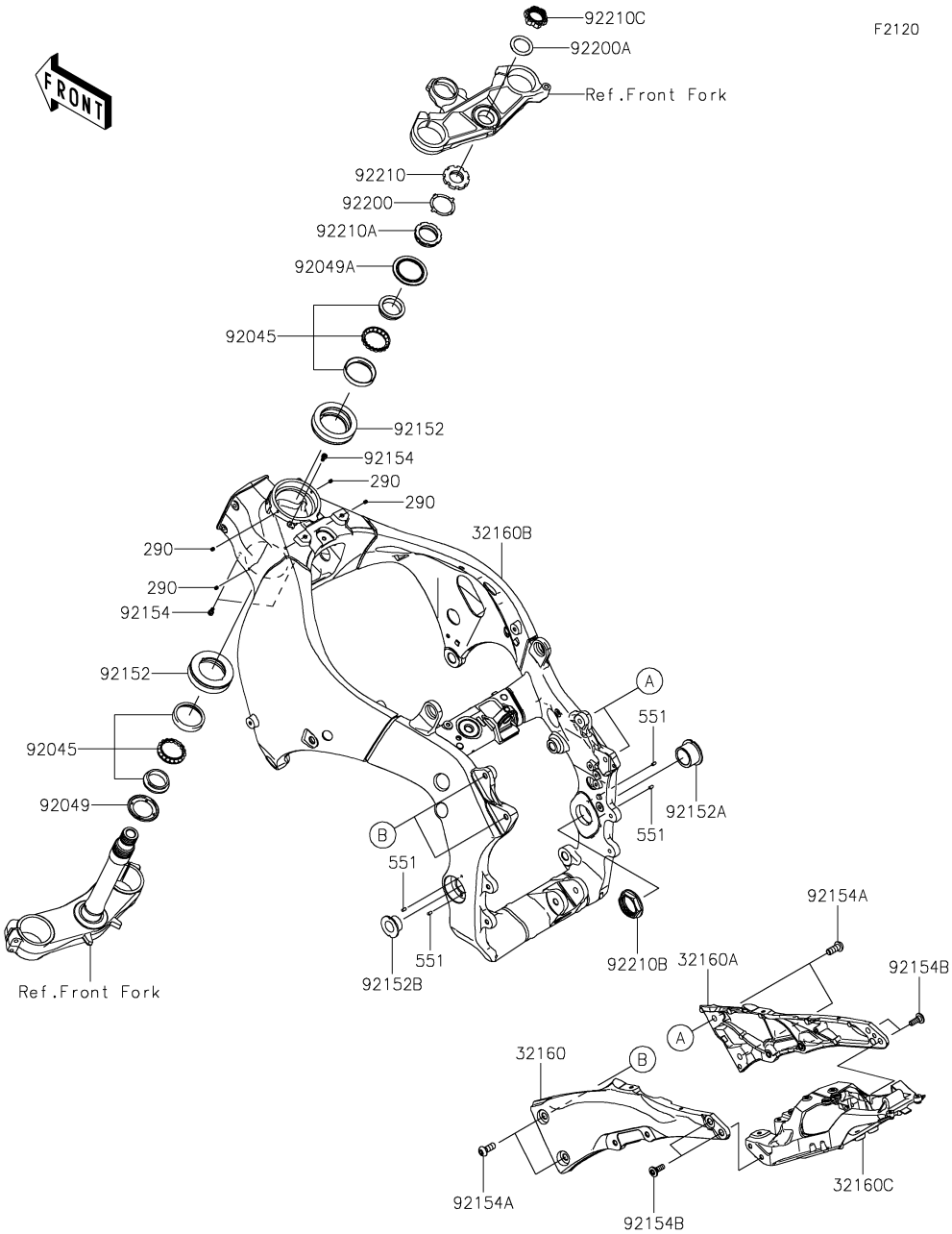

Ref. No.	Part No.	Description	Spec Code	Quantity-ZX1000 '16 SGF	'16 SGFA	'16 SGFB		
32160	32160-0506-18R	FRAME-COMP,RR,LH,F.S.BLACK		1	1	1		
32160A	32160-0507-18R	FRAME-COMP,RR,RH,F.S.BLACK		1	1	1		
32160B	32160-0800	FRAME-COMP,MAIN		1	1	1		
32160C	32160-0801	FRAME-COMP		1	1	1		
92045	92045-1384	BEARING-BALL,SF07A17PX1V1		2	2	2		
92049	92049-0022	SEAL-OIL,DS35X55X4		1	1	1		
92049A	92049-0742	SEAL-OIL,43X55.5X8.6		1	1	1		
92152	92152-2165	COLLAR,55X77X18.5		2	2	2		
92152A	92152-2168	COLLAR,30X38X24		1	1	1		
92152B	92152-2170	COLLAR,20.5X27X17.5		1	1	1		
92154	92154-1642	BOLT,SOCKET,5X10		3	3	3		
92154A	92154-1900	BOLT,SOCKET,10X25		4	4	4		
92154B	92154-1901	BOLT,SOCKET,8X23		4	4	4		
92200	92200-0036	WASHER		1	1	1		
92200A	92200-0595	WASHER,28.5X40X1.6		1	1	1		
92210	92210-0095	NUT,35MM		1	1	1		
92210A	92210-0823	NUT,35MM		1	1	1		
92210B	92210-1441	NUT,38MM		1	1	1		
92210C	92210-1460	NUT,28MM		1	1	1		
290	290Q0506	SCREW-SET-SOCKET,5X6		4	4	4		
551	551R0408	PIN-DOWEL		4	4	4		

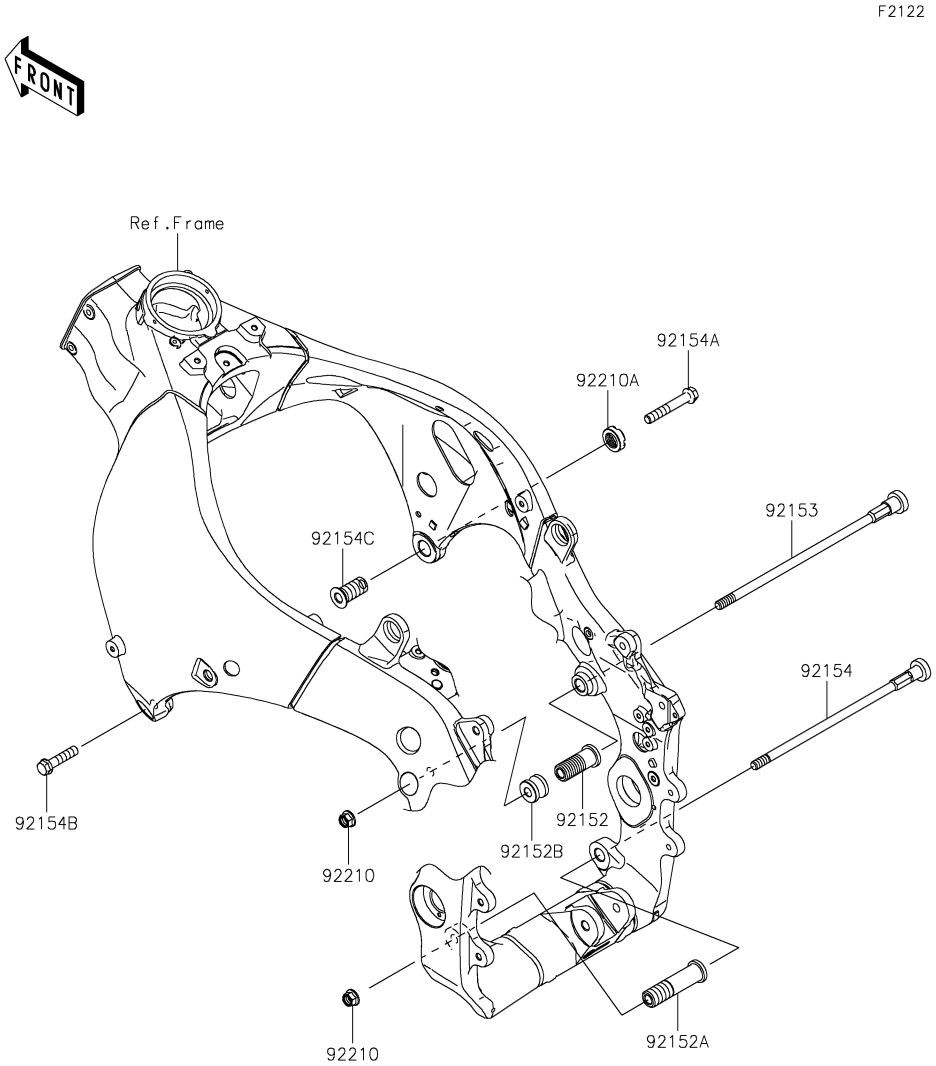

Ref. No.	Part No.	Description	Spec Code	Quantity-ZX1000 '16 SGF	'16 SGFA	'16 SGFB		
92152	92152-0076	COLLAR,ENGINE MOUNT		1	1	1		
92152A	92152-0860	COLLAR,10.5X20X80		1	1	1		
92152B	92152-0984	COLLAR		1	1	1		
92153	92153-1329	BOLT,SOCKET,10X279		1	1	1		
92154	92154-0386	BOLT,SOCKET,10X260		1	1	1		
92154A	92154-1964	BOLT,FLANGED,10X65		1	1	1		
92154B	92154-1965	BOLT,FLANGED,10X40		1	1	1		
92154C	92154-1966	BOLT,SOCKET,18X38		1	1	1		
92210	92210-1139	NUT,LOCK,FLANGED,10MM		2	2	2		
92210A	92210-1390	NUT,CASTLE,18MM		1	1	1		

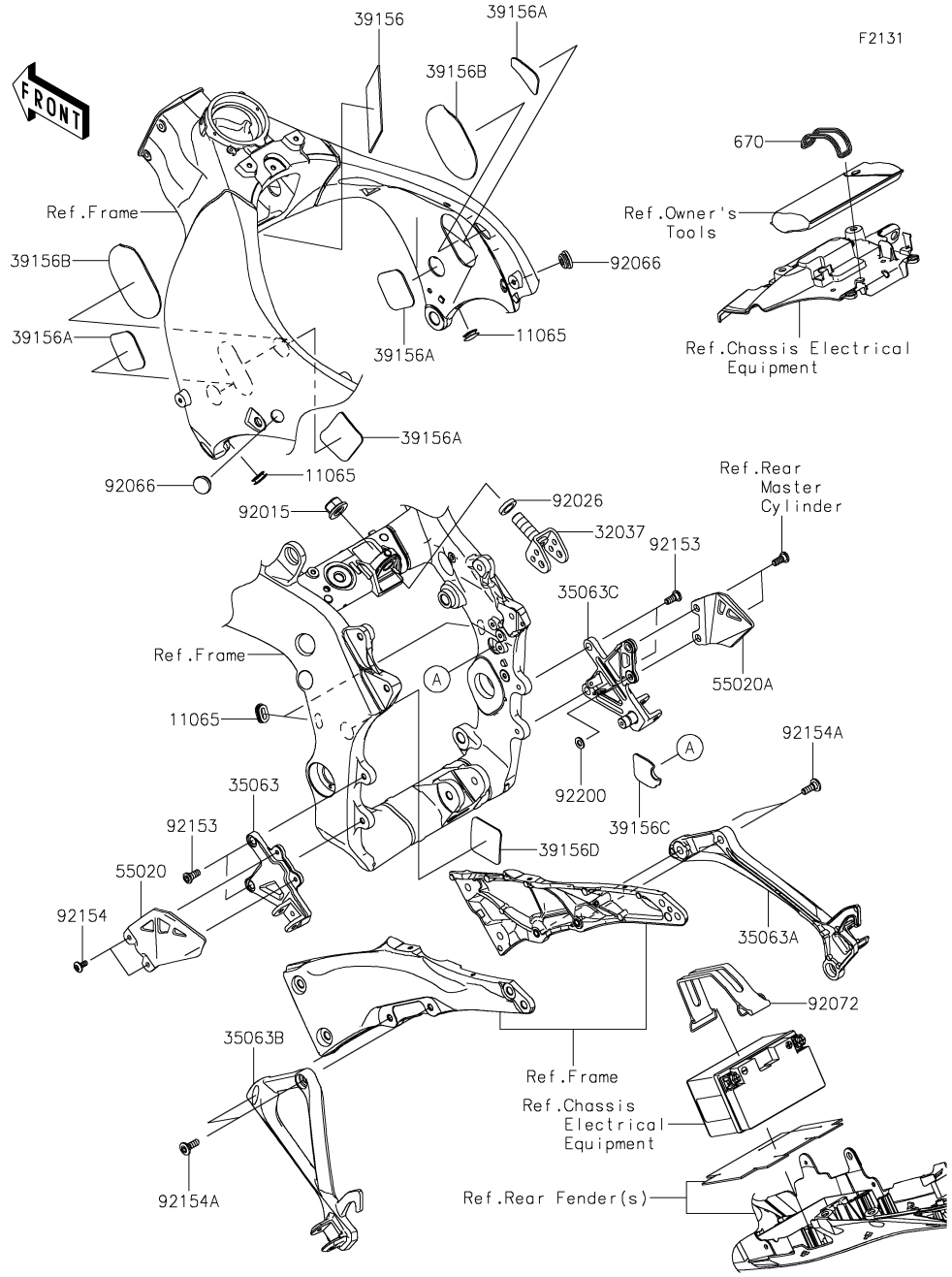

Ref. No.	Part No.	Description	Spec Code	Quantity-ZX1000 '16 SGF	'16 SGFA	'16 SGFB		
11065	11065-0095	CAP		4	4	4		
32037	32037-0149	BRACKET-SHOCKABSORBER		1	1	1		
35063	35063-0697-18R	STAY,FR STEP,LH,F.S.BLACK		1	1	1		
35063A	35063-0700-18R	STAY,RR STEP,RH,F.S.BLACK		1	1	1		
35063B	35063-0852-18R	STAY,RR STEP,LH,F.S.BLACK		1	1	1		
35063C	35063-1331-18R	STAY,FR STEP,RH,F.S.BLACK		1	1	1		
39156	39156-0923	PAD,50X115X2		1	1	1		
39156A	39156-1961	PAD,55X55X2		4	4	4		
39156B	39156-1962	PAD,76X110X2		2	2	2		
39156C	39156-1964	PAD,45X50.5X2		1	1	1		
39156D	39156-2116	PAD,55.5X55.5X0.5		1	1	1		
55020	55020-0569	GUARD,FR STEP,LH		1	1	1		
55020A	55020-1944	GUARD,FR STEP,RH		1	1	1		
92015	92015-1316	NUT,FLANGED,16MM		1	1	1		
92026	92026-0813	SPACER,16.5X26X5.2		1	1	1		
92066	92066-1320	PLUG,17MM		2	2	2		
92072	92072-1306	BAND,L=168		1	1	1		
92153	92153-1621	BOLT,SOCKET,8X20		4	4	4		
92154	92154-1735	BOLT,SOCKET,6X14		2	2	2		
92154A	92154-1968	BOLT,SOCKET,8X23		4	4	4		
92200	92200-0807	WASHER,8.4X16X1.6		1	1	1		
670	670B5055	O RING,54.6X5.7		1	1	1		

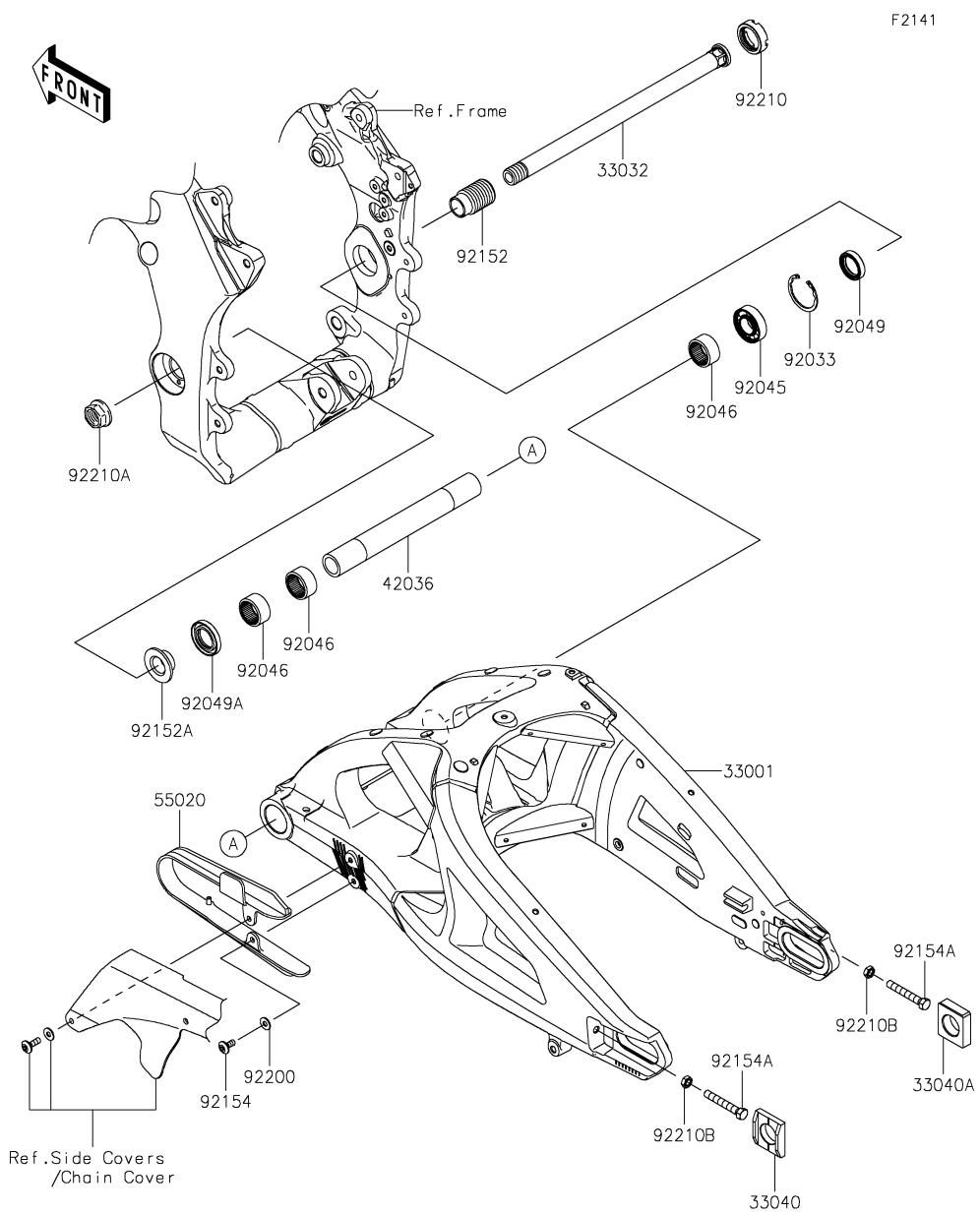

Ref. No.	Part No.	Description	Spec Code	Quantity-ZX1000 '16 SGF	'16 SGFA	'16 SGFB		
33001	33001-0648	ARM-COMP-SWING		1	1	1		
33032	33032-0048	SHAFT-SWING ARM		1	1	1		
33040	33040-0027	ADJUSTER-CHAIN,LH		1	1	1		
33040A	33040-1114	ADJUSTER-CHAIN,RH		1	1	1		
42036	42036-1341	SLEEVE,SWING ARM PIVOT,L=226		1	1	1		
55020	55020-0561	GUARD,CHAIN		1	1	1		
92033	92033-1041	RING-SNAP,42MM		1	1	1		
92045	92045-0017	BEARING-BALL,6004UL11		1	1	1		
92046	92046-0008	BEARING-NEEDLE,7E-HVS 28X34X17		3	3	3		
92049	92049-1314	SEAL-OIL,MHSA25X42X6		1	1	1		
92049A	92049-1352	SEAL-OIL,MHSA25X34X7		1	1	1		
92152	92152-0154	COLLAR,SWING ARM,L=47		1	1	1		
92152A	92152-2169	COLLAR,20.2X25X15		1	1	1		
92154	92154-1807	BOLT,SOCKET,6X14		1	1	1		
92154A	92154-1962	BOLT-SMALL,8X55		2	2	2		
92200	92200-1762	WASHER,6.2X15X1.2		1	1	1		
92210	92210-0134	NUT,30MM		1	1	1		
92210A	92210-0320	NUT,FLANGED,20MM		1	1	1		
92210B	92210-1459	NUT-HEX-SMALL,8MM		2	2	2		

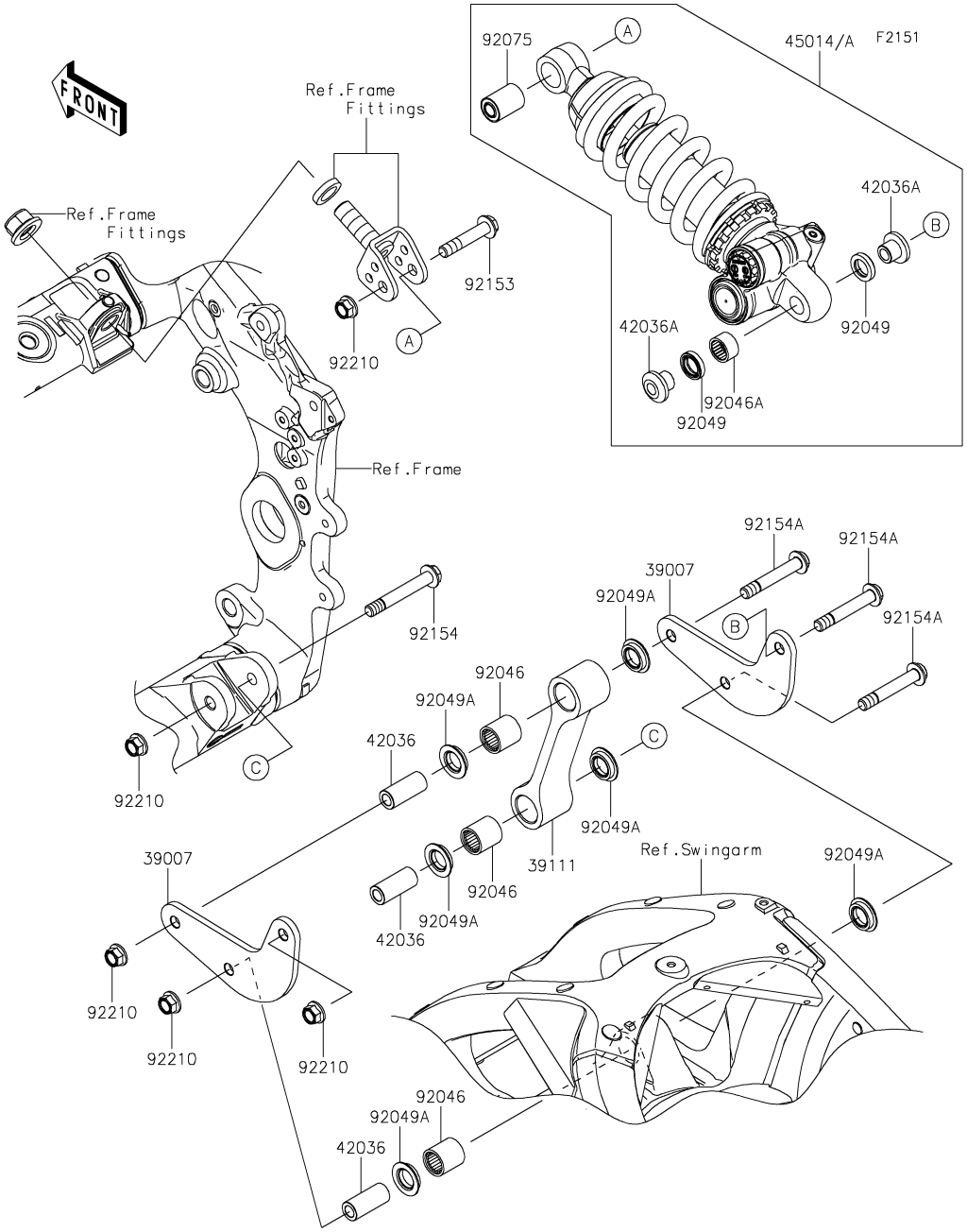

Ref. No.	Part No.	Description	Spec Code	Quantity-ZX1000 '16 SGF	'16 SGFA	'16 SGFB		
39007	39007-0395	ARM-SUSP		2	2	2		
39111	39111-0337	ROD-TIE,SUSPENSION		1	1	1		
42036	42036-0075	SLEEVE,10.1X17X39		3	3	3		
42036A	42036-0789	SLEEVE		2	2	2		
45014	45014-0515-52G	SHOCKABSORBER,BLACK/GRAY			1	1		
45014A	45014-0515-52J	SHOCKABSORBER,GREEN/GRAY		1				
92046	92046-1273	BEARING-NEEDLE,SFYZM172425		3	3	3		
92046A	92046-1301	BEARING-NEEDLE,7E-HVS16X22X12		1	1	1		
92049	92049-0792	SEAL-OIL		2	2	2		
92049A	92049-1223	SEAL-OIL,MHA17245.7F		6	6	6		
92075	92075-1426	DAMPER,SHOCKABSORBER		1	1	1		
92153	92153-1545	BOLT,FLANGED,10X51		1	1	1		
92154	92154-0384	BOLT,FLANGED,10X71		1	1	1		
92154A	92154-0398	BOLT,FLANGED,10X63		3	3	3		
92210	92210-1139	NUT,LOCK,FLANGED,10MM		5	5	5		

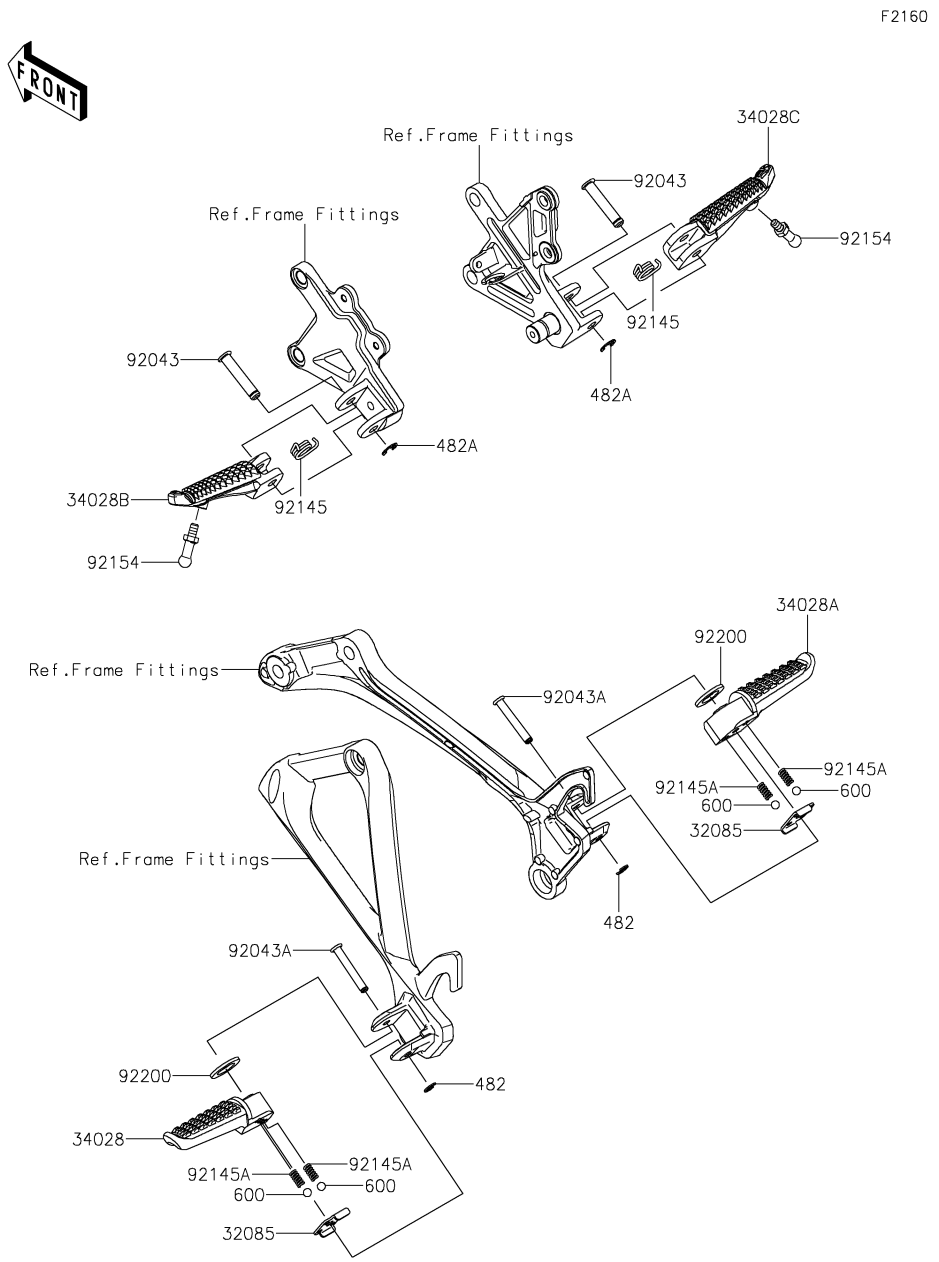

Ref. No.	Part No.	Description	Spec Code	Quantity-ZX1000 '16 SGF	'16 SGFA	'16 SGFB		
32085	32085-0047	STOPPER,REAR STEP		2	2	2		
34028	34028-0094	STEP,RR,LH		1	1	1		
34028A	34028-0095	STEP,RR,RH		1	1	1		
34028B	34028-0139	STEP,FR,LH		1	1	1		
34028C	34028-0140	STEP,FR,RH		1	1	1		
92043	92043-0877	PIN,8X40.5		2	2	2		
92043A	92043-1595	PIN,6X40		2	2	2		
92145	92145-0780	SPRING		2	2	2		
92145A	92145-1319	SPRING		4	4	4		
92154	92154-1895	BOLT,BANK SENSOR,6X10		2	2	2		
92200	92200-0043	WASHER,16X26X2.3		2	2	2		
482	482EA5000	CIRCLIP-TYPE-E		2	2	2		
482A	482EA7000	CIRCLIP-TYPE-E		2	2	2		
600	600A0800	BALL-STEEL,1/4		4	4	4		

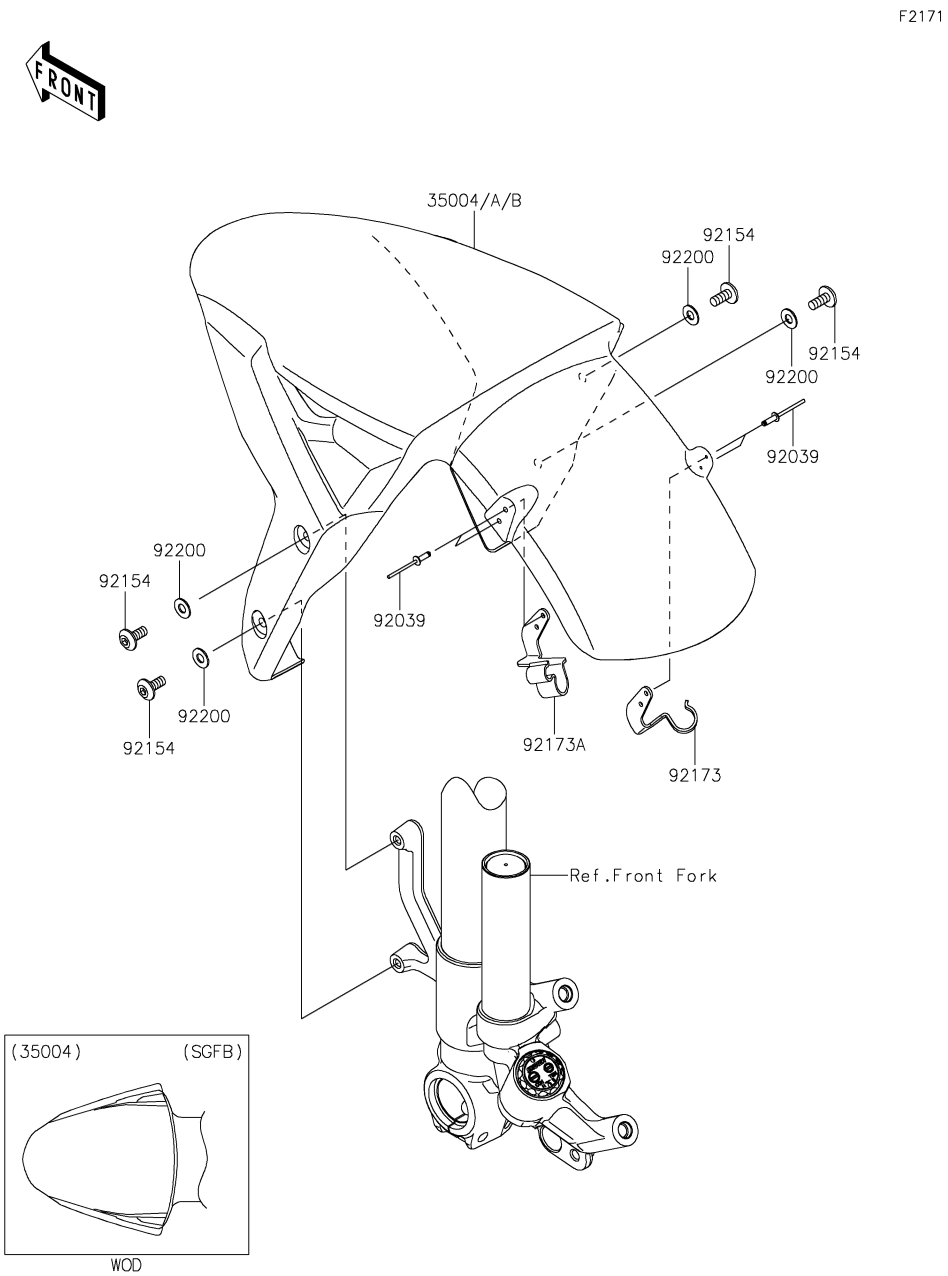

Ref. No.	Part No.	Description	Spec Code	Quantity-ZX1000 '16 SGF	'16 SGFA	'16 SGFB		
35004	35004-0342-45L	FENDER-FRONT,F.EBONY				1		
35004A	35004-0342-51B	FENDER-FRONT,M.M.C.GRAY		1				
35004B	35004-0342-777	FENDER-FRONT,L.GREEN			1			
92039	92039-0752	RIVET,3.2X9.5		4	4	4		
92154	92154-1735	BOLT,SOCKET,6X14		4	4	4		
92173	92173-1481	CLAMP,FENDER,RH		1	1	1		
92173A	92173-1493	CLAMP,FENDER,LH		1	1	1		
92200	92200-1388	WASHER,6.5X14X1		4	4	4		

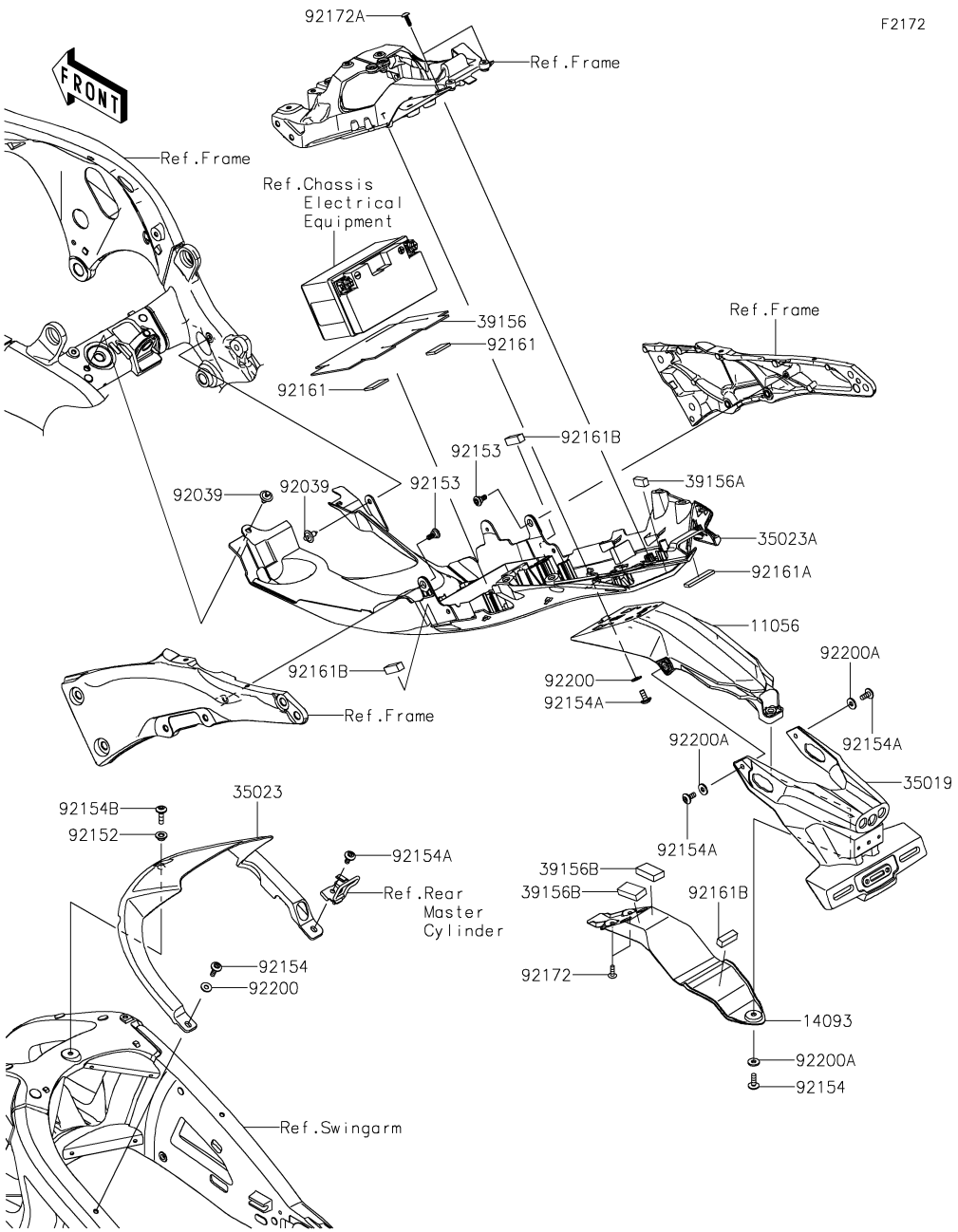

Ref. No.	Part No.	Description	Spec Code	Quantity-ZX1000 '16 SGF	'16 SGFA	'16 SGFB		
11056	11056-7677	BRACKET,FLAP		1	1	1		
14093	14093-0336	COVER,FLAP		1	1	1		
35019	35019-0616	FLAP		1	1	1		
35023	35023-0188	FENDER-REAR,INNER		1	1	1		
35023A	35023-0411	FENDER-REAR		1	1	1		
39156	39156-0754	PAD,REAR FENDER		1	1	1		
39156A	39156-1968	PAD,20X8X10		1	1	1		
39156B	39156-1986	PAD,36X20X9		2	2	2		
92039	92039-1289	RIVET		2	2	2		
92152	92152-2152	COLLAR,6.5X10X6.2		1	1	1		
92153	92153-1956	BOLT,SOCKET,6MM		2	2	2		
92154	92154-1694	BOLT,SOCKET,6X18		2	2	2		
92154A	92154-1807	BOLT,SOCKET,6X14		7	7	7		
92154B	92154-1810	BOLT,SOCKET,6X22		1	1	1		
92161	92161-0958	DAMPER,20X30X3		2	2	2		
92161A	92161-1834	DAMPER,10X50X4		1	1	1		
92161B	92161-1835	DAMPER,10X30X10		3	3	3		
92172	92172-0175	SCREW,TAPPING,5X16		2	2	2		
92172A	92172-0238	SCREW,TAPPING,5X16		2	2	2		
92200	92200-1762	WASHER,6.2X15X1.2		5	5	5		
92200A	92200-1834	WASHER,6.5X16X2		3	3	3		

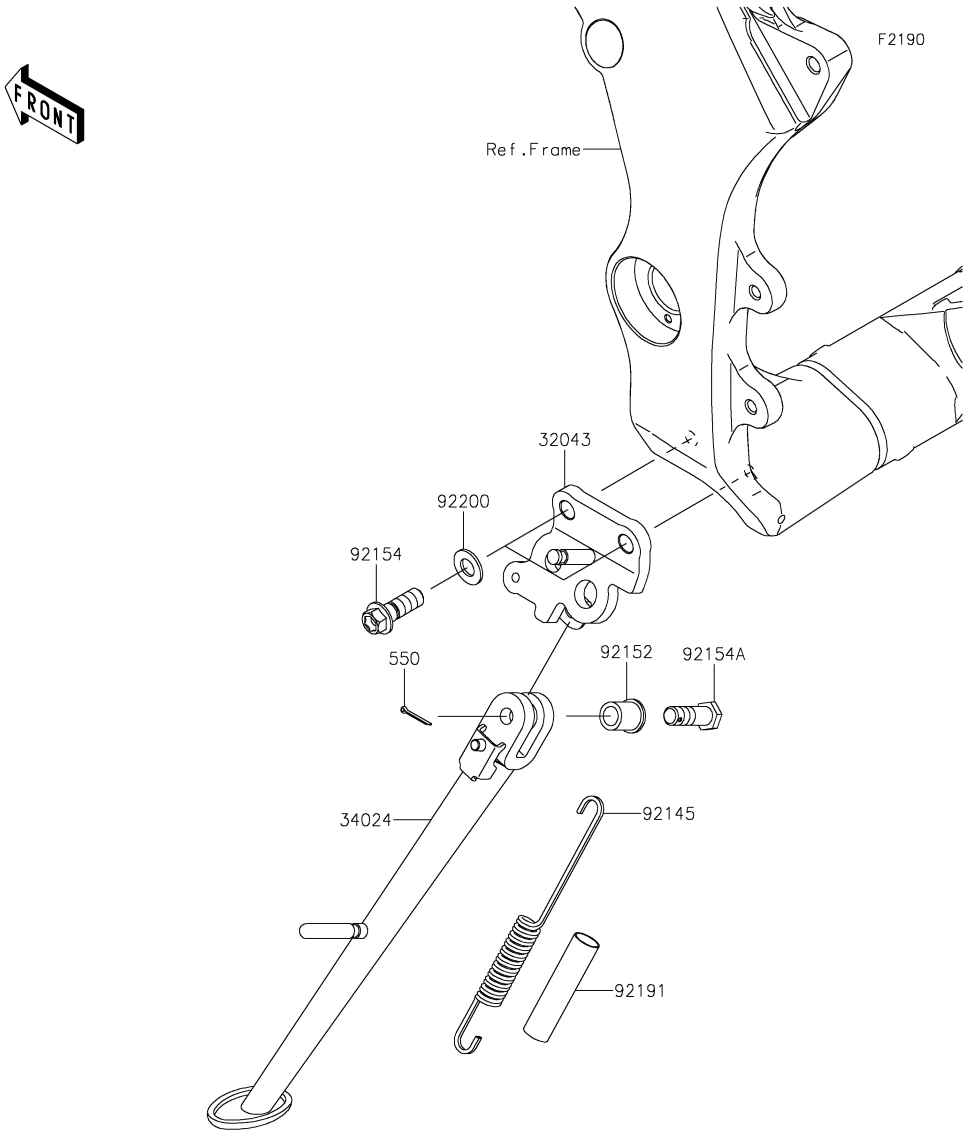

Ref. No.	Part No.	Description	Spec Code	Quantity-ZX1000 '16 SGF	'16 SGFA	'16 SGFB		
32043	32043-0604-18R	BRACKET-STAND,F.S.BLACK		1	1	1		
34024	34024-0137-18R	STAND-SIDE,F.S.BLACK		1	1	1		
92145	92145-1731	SPRING,SIDE STAND		1	1	1		
92152	92152-2171	COLLAR,10.2X15X18.1		1	1	1		
92154	92154-1963	BOLT,FLANGED,10X28		2	2	2		
92154A	92154-2088	BOLT,10X30		1	1	1		
92191	92191-1001	TUBE,13X16X60		1	1	1		
92200	92200-0328	WASHER,10.2X20X1.6		2	2	2		
550	550AA2015	PIN-COTTER,2.0X15		1	1	1		

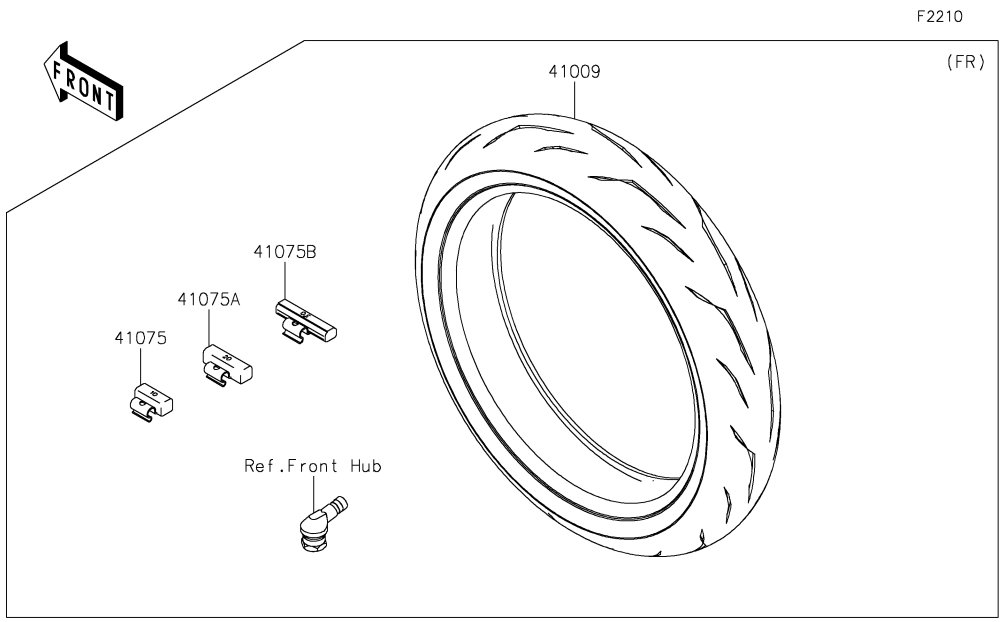

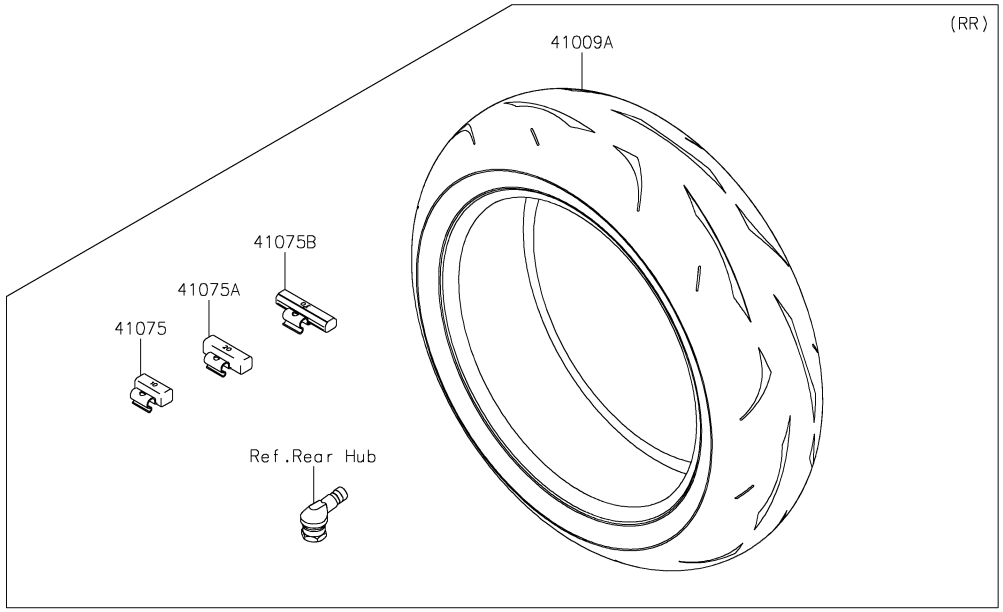

Ref. No.	Part No.	Description	Spec Code	Quantity-ZX1000 '16 SGF	'16 SGFA	'16 SGFB		
41009	41009-0620	TIRE,FR,120/70ZR17(58W),RS10F		1	1	1		
41009A	41009-0621	TIRE,RR,190/55ZR17(75W),RS10		1	1	1		
41075	41075-0007	BALANCER-WHEEL,10G,SILVER		AR	AR	AR		
41075A	41075-0008	BALANCER-WHEEL,20G,SILVER		AR	AR	AR		
41075B	41075-0009	BALANCER-WHEEL,30G,SILVER		AR	AR	AR		

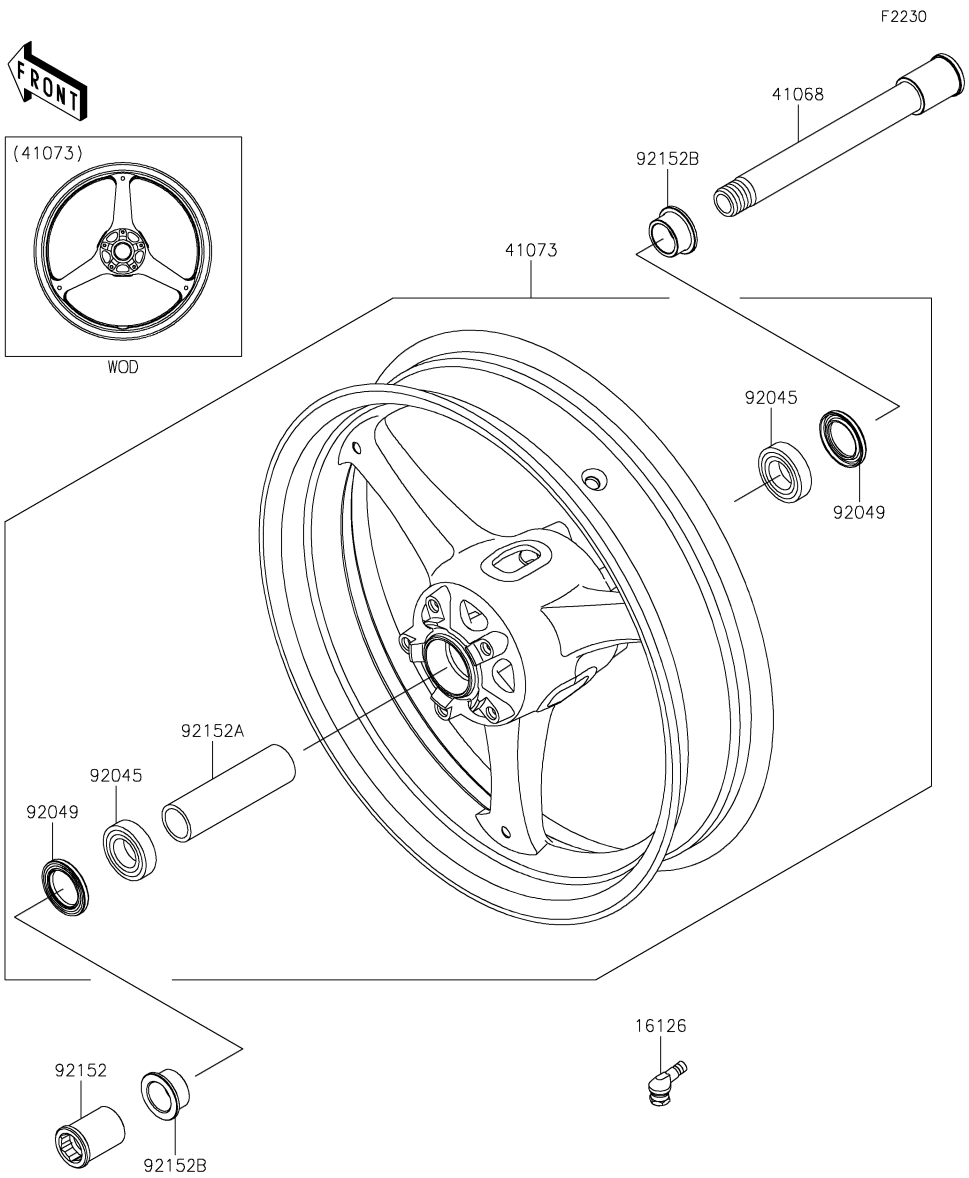

Ref. No.	Part No.	Description	Spec Code	Quantity-ZX1000 '16 SGF	'16 SGFA	'16 SGFB		
16126	16126-0735	VALVE		1	1	1		
41068	41068-0594	AXLE,FR,25X205		1	1	1		
41073	41073-0677-18F	WHEEL-ASSY,FR,G.BLACK		1	1	1		
92045	92045-0803	BEARING-BALL,25X47X12		2	2	2		
92049	92049-0050	SEAL-OIL,BJN-C2 32X47X5		2	2	2		
92152	92152-0240	COLLAR,FR AXLE,LH,L=44.5		1	1	1		
92152A	92152-0616	COLLAR,FR HUB,L=115		1	1	1		
92152B	92152-1947	COLLAR,25X40X18		2	2	2		

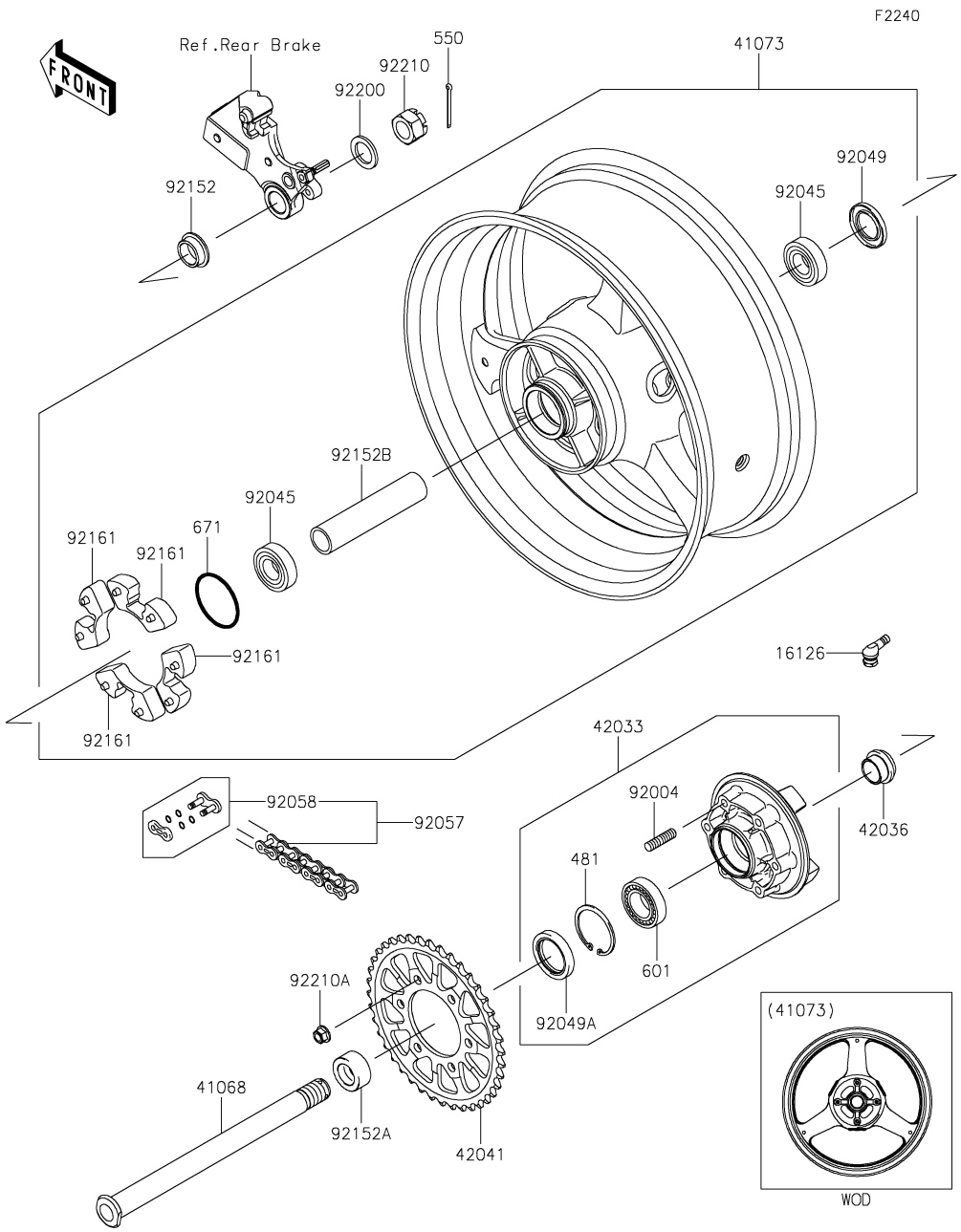

Ref. No.	Part No.	Description	Spec Code	Quantity-ZX1000 '16 SGF	'16 SGFA	'16 SGFB		
16126	16126-0735	VALVE		1	1	1		
41068	41068-0613	AXLE,RR,24X326		1	1	1		
41073	41073-0688-18F	WHEEL-ASSY,RR,G.BLACK		1	1	1		
42033	42033-0038	COUPLING-ASSY,RR HUB		1	1	1		
42036	42036-1279	SLEEVE,RR HUB,L=22		1	1	1		
42041	42041-0096	SPROCKET-HUB,39T		1	1	1		
92004	92004-0028	STUD,10X19		6	6	6		
92045	92045-0804	BEARING-BALL,25X52X15		2	2	2		
92049	92049-0722	SEAL-OIL,31X52X5		1	1	1		
92049A	92049-1376	SEAL-OIL,PJN 40 55 8		1	1	1		
92057	92057-0672	CHAIN,DRIVE,EK525RMX3/3D,114L		1	1	1		
92058	92058-0041	JOINT-CHAIN		1	1	1		
92152	92152-0289	COLLAR,25X32X13		1	1	1		
92152A	92152-0867	COLLAR,25X40X18.7		1	1	1		
92152B	92152-0868	COLLAR		1	1	1		
92161	92161-0342	DAMPER,SHOCK,RR HUB		4	4	4		
92200	92200-0278	WASHER,25.5X38X3.2		1	1	1		
92210	92210-0280	NUT,CASTLE,24MM		1	1	1		
92210A	92210-1139	NUT,LOCK,FLANGED,10MM		6	6	6		
481	481J5500	CIRCLIP		1	1	1		
550	550AA4045	PIN-COTTER,4.0X45		1	1	1		
601	601B6006G	BEARING-BALL,#6006G		1	1	1		
671	671B2560	O RING,60MM		1	1	1		

F2260

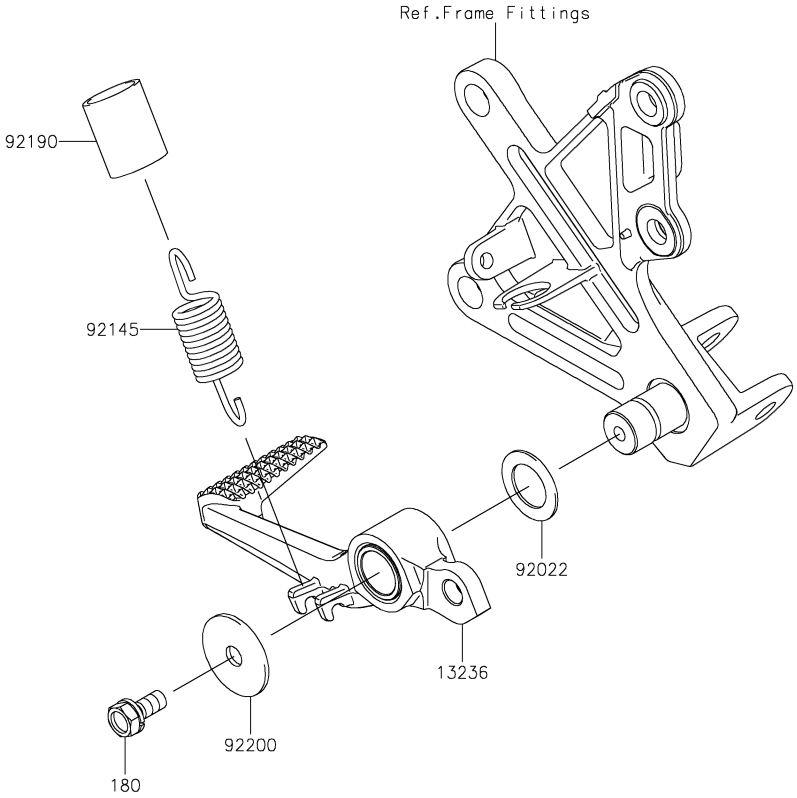

Ref. No.	Part No.	Description	Spec Code	Quantity-ZX1000 '16 SGF	'16 SGFA	'16 SGFB		
13236	13236-0195	LEVER-COMP,BRAKE PEDAL		1	1	1		
92022	92022-326	WASHER,15.3X24X1		1	1	1		
92145	92145-0826	SPRING,BRAKE PEDAL		1	1	1		
92190	92190-1185	TUBE,16X19X30		1	1	1		
92200	92200-0279	WASHER,7X28X1.6		1	1	1		
180	180BA0614	BOLT-UPSET-WS,6X14		1	1	1		

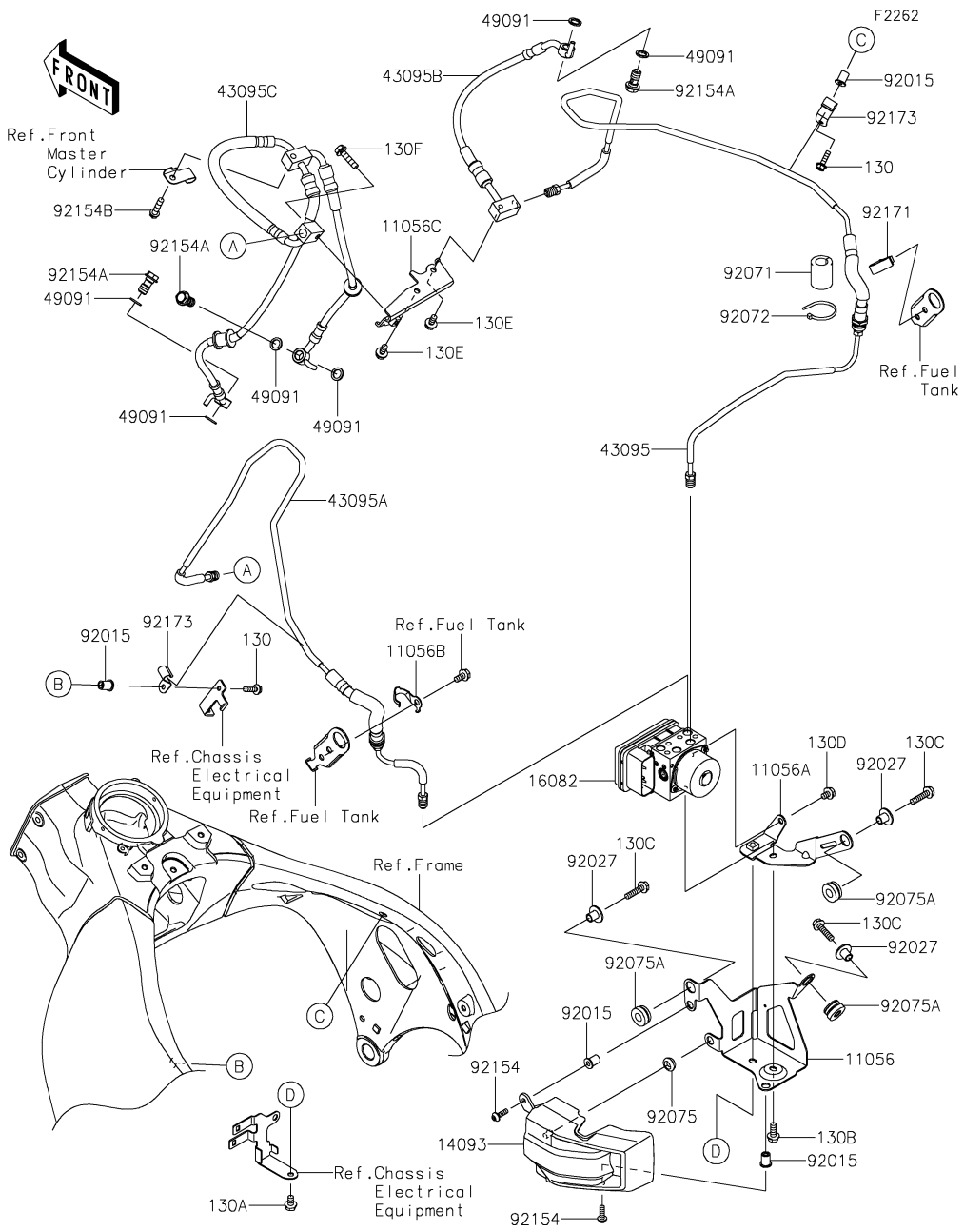

Ref. No.	Part No.	Description	Spec Code	Quantity-ZX1000 '16 SGF	'16 SGFA	'16 SGFB		
11056	11056-0325	BRACKET,ABS UNIT,MAIN		1	1	1		
11056A	11056-0326	BRACKET,ABS UNIT,SUB		1	1	1		
11056B	11056-0327	BRACKET		1	1	1		
11056C	11056-7726	BRACKET,FRM HEAD		1	1	1		
14093	14093-0434	COVER,ABS UNIT		1	1	1		
16082	16082-0757	PUMP-ASSY-OIL,ABS		1	1	1		
43095	43095-0917	HOSE-BRAKE,ABS UNIT-FRM HEAD		1	1	1		
43095A	43095-0919	HOSE-BRAKE,FRM HEAD-ABS UNIT		1	1	1		
43095B	43095-0923	HOSE-BRAKE,FR M/CYL.-FRM HEAD		1	1	1		
43095C	43095-0924	HOSE-BRAKE,FRM HEAD-FR CAL.		1	1	1		
49091	49091-0001	WASHER-SEAL,10.1X14.5X1.5		6	6	6		
92015	92015-1757	NUT,WELL,5MM		4	4	4		
92027	92027-1651	COLLAR,FLANGED,L=12.1,BLACK		3	3	3		
92071	92071-1143	GROMMET		1	1	1		
92072	92072-3768	BAND,L=148		1	1	1		
92075	92075-1011	DAMPER,6X16X7		1	1	1		
92075A	92075-277	DAMPER		3	3	3		
92154	92154-0209	BOLT,SOCKET,5X16		2	2	2		
92154A	92154-1554	BOLT,BANJO,10X19		3	3	3		
92154B	92154-1836	BOLT,FLANGED-SMALL,6X25		1	1	1		
92171	92171-0782	CLAMP		1	1	1		
92173	92173-0786	CLAMP		2	2	2		
130	130BA0518	BOLT-FLANGED,5X18		2	2	2		
130A	130BA0610	BOLT-FLANGED,6X10		1	1	1		
130B	130BA0616	BOLT-FLANGED,6X16		1	1	1		
130C	130BA0625	BOLT-FLANGED,6X25		3	3	3		
130D	130BB0608	BOLT-FLANGED,6X8		1	1	1		
130E	130CA0612	BOLT-FLANGED,6X12		2	2	2		
130F	130CB0625	BOLT-FLANGED,6X25		1	1	1		

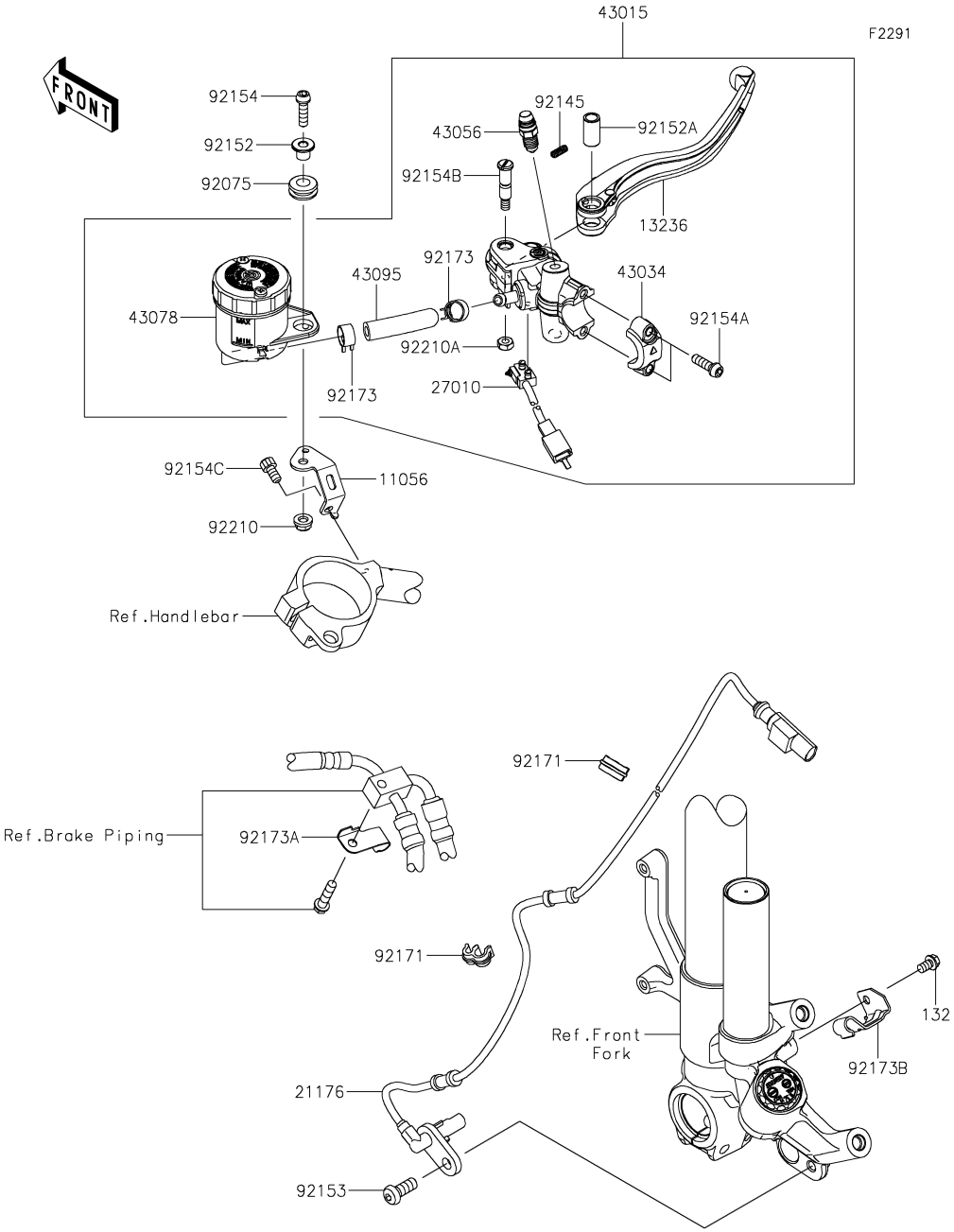

Ref. No.	Part No.	Description	Spec Code	Quantity-ZX1000 '16 SGF	'16 SGFA	'16 SGFB		
11056	11056-7023	BRACKET,RESERVOIR TANK		1	1	1		
13236	13236-0770	LEVER-COMP,BRAKE		1	1	1		
21176	21176-0813	SENSOR,FR WHEEL		1	1	1		
27010	27010-0831	SWITCH,BRAKE		1	1	1		
43015	43015-0642	CYLINDER-ASSY-MASTER,FR		1	1	1		
43034	43034-0121	HOLDER-BRAKE		1	1	1		
43056	43056-0012	BREATHER-BRAKE		1	1	1		
43078	43078-0577	RESERVOIR		1	1	1		
43095	43095-0908	HOSE-BRAKE		1	1	1		
92075	92075-1028	DAMPER		1	1	1		
92145	92145-1683	SPRING		1	1	1		
92152	92152-2110	COLLAR,6X16X10.6		1	1	1		
92152A	92152-2151	COLLAR,LEVER		1	1	1		
92153	92153-0912	BOLT,SOCKET,8X20		1	1	1		
92154	92154-1456	BOLT,SOCKET,6X22		1	1	1		
92154A	92154-1644	BOLT,SOCKET,6X20		2	2	2		
92154B	92154-1809	BOLT,LEVER		1	1	1		
92154C	92154-1978	BOLT,SOCKET,6X12		1	1	1		
92171	92171-0921	CLAMP		2	2	2		
92173	92173-1498	CLAMP,HOSE		2	2	2		
92173A	92173-1507	CLAMP,UNDER BRACKET		1	1	1		
92173B	92173-1508	CLAMP,FRONT FORK,LH		1	1	1		
92210	92210-0991	NUT,6MM		1	1	1		
92210A	92210-1424	NUT,U		1	1	1		
132	132BA0610	BOLT-FLANGED-SMALL,6X10		1	1	1		

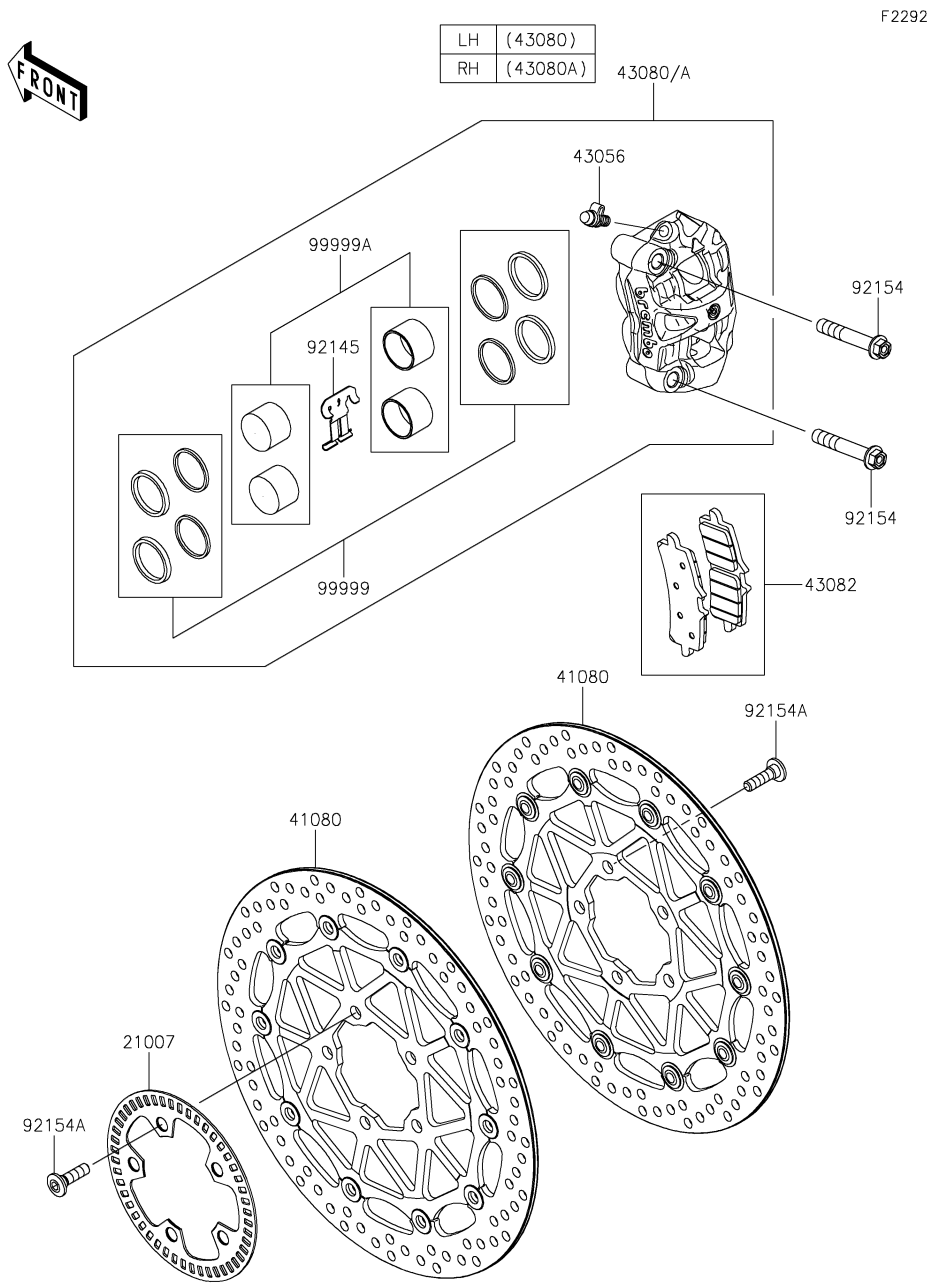

Ref. No.	Part No.	Description	Spec Code	Quantity-ZX1000 '16 SGF	'16 SGFA	'16 SGFB		
21007	21007-0166	ROTOR,FR WHEEL		1	1	1		
41080	41080-0648-18U	DISC,BLACK/BLACK		2	2	2		
43056	43056-0015	BREATHER-BRAKE		2	2	2		
43080	43080-0172-51J	CALIPER-SUB-ASSY,FR,LH,GRAY		1	1	1		
43080A	43080-0173-51J	CALIPER-SUB-ASSY,FR,RH,GRAY		1	1	1		
43082	43082-0157	PAD-ASSY-BRAKE		2	2	2		
92145	92145-1684	SPRING		2	2	2		
92154	92154-1643	BOLT,FLANGED,10X60		4	4	4		
92154A	92154-1865	BOLT,SOCKET,8X30		10	10	10		
99999	99999-0557	KIT.,DUST SEAL		2	2	2		
99999A	99999-0558	KIT.,CALIPER PISTON		2	2	2		

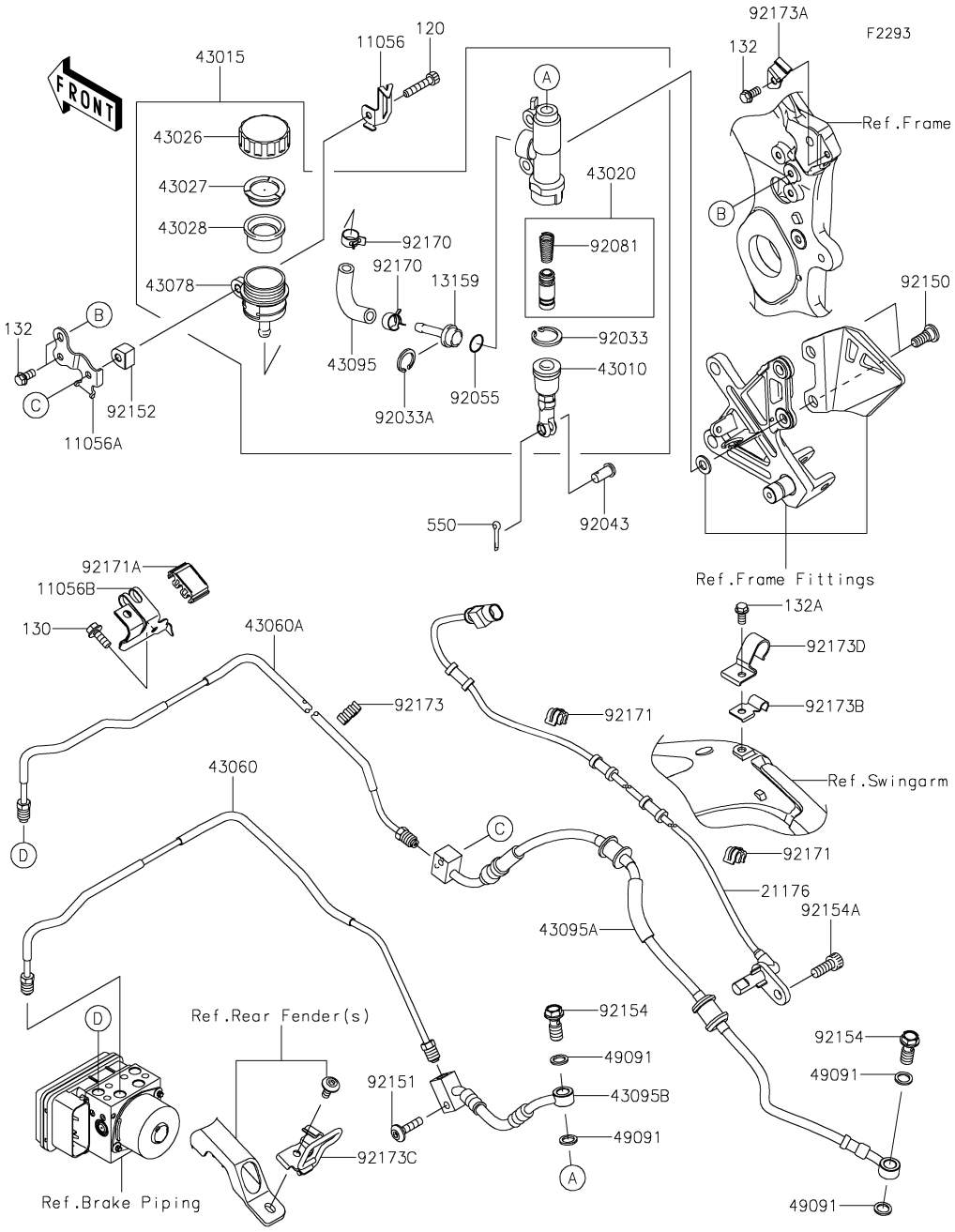

Ref. No.	Part No.	Description	Spec Code	Quantity-ZX1000 '16 SGF	'16 SGFA	'16 SGFB		
11056	11056-7024	BRACKET,RESERVOIR TANK CAP		1	1	1		
11056A	11056-7786	BRACKET,RESERVOIR TANK		1	1	1		
11056B	11056-7960	BRACKET,UPP CROSS		1	1	1		
13159	13159-0009	CONNECTOR		1	1	1		
21176	21176-0815	SENSOR,RR WHEEL		1	1	1		
43010	43010-0016	ROD-ASSY-BRAKE		1	1	1		
43015	43015-0640	CYLINDER-ASSY-MASTER,RR		1	1	1		
43020	43020-1057	PISTON-COMP-BRAKE		1	1	1		
43026	43026-0009	CAP-BRAKE		1	1	1		
43027	43027-1053	PLATE-DIAPHRAGM		1	1	1		
43028	43028-1065	DIAPHRAGM		1	1	1		
43060	43060-0095	PIPE-BRAKE,RR M/CYLINDER-HU		1	1	1		
43060A	43060-0328	PIPE-BRAKE,ABS UNIT-SWA BKT		1	1	1		
43078	43078-0575	RESERVOIR		1	1	1		
43095	43095-0585	HOSE-BRAKE,RESERVOIR		1	1	1		
43095A	43095-0928	HOSE-BRAKE,SWA BKT-RR CAL.		1	1	1		
43095B	43095-0936	HOSE-BRAKE,RR M/CYL.-SWA BKT		1	1	1		
49091	49091-0001	WASHER-SEAL,10.1X14.5X1.5		4	4	4		
92033	92033-0079	RING-SNAP,20.9X24.6X1.2		1	1	1		
92033A	92033-1186	RING-SNAP,20.5MM		1	1	1		
92043	92043-0104	PIN,8X17		1	1	1		
92055	92055-0741	RING-O,14.8X2.4		1	1	1		
92081	92081-1737	SPRING,MASTER CYLINDER		1	1	1		
92150	92150-1837	BOLT,SOCKET,8X25		2	2	2		
92151	92151-1611	BOLT,SOCKET,6X25		1	1	1		
92152	92152-2188	COLLAR,6.1X16X11.3		1	1	1		
92154	92154-1712	BOLT,BANJO,10X23		2	2	2		
92154A	92154-1976	BOLT,SOCKET,8X20		1	1	1		
92170	92170-1091	CLAMP,HOSE		2	2	2		
92171	92171-0921	CLAMP		2	2	2		
92171A	92171-1731	CLAMP		1	1	1		
92173	92173-0181	CLAMP		1	1	1		
92173A	92173-1516	CLAMP,MAIN FRAME,RR		1	1	1		
92173B	92173-1517	CLAMP,SWING ARM,MID		1	1	1		
92173C	92173-1518	CLAMP,SWING ARM,RR		1	1	1		
92173D	92173-1520	CLAMP,SWING ARM,MID		1	1	1		
120	120CC0635	BOLT-SOCKET,6X35		1	1	1		
130	130BA0616	BOLT-FLANGED,6X16		1	1	1		
132	132BA0612	BOLT-FLANGED-SMALL,6X12		3	3	3		
132A	132BB0612	BOLT-FLANGED-SMALL,6X12		1	1	1		

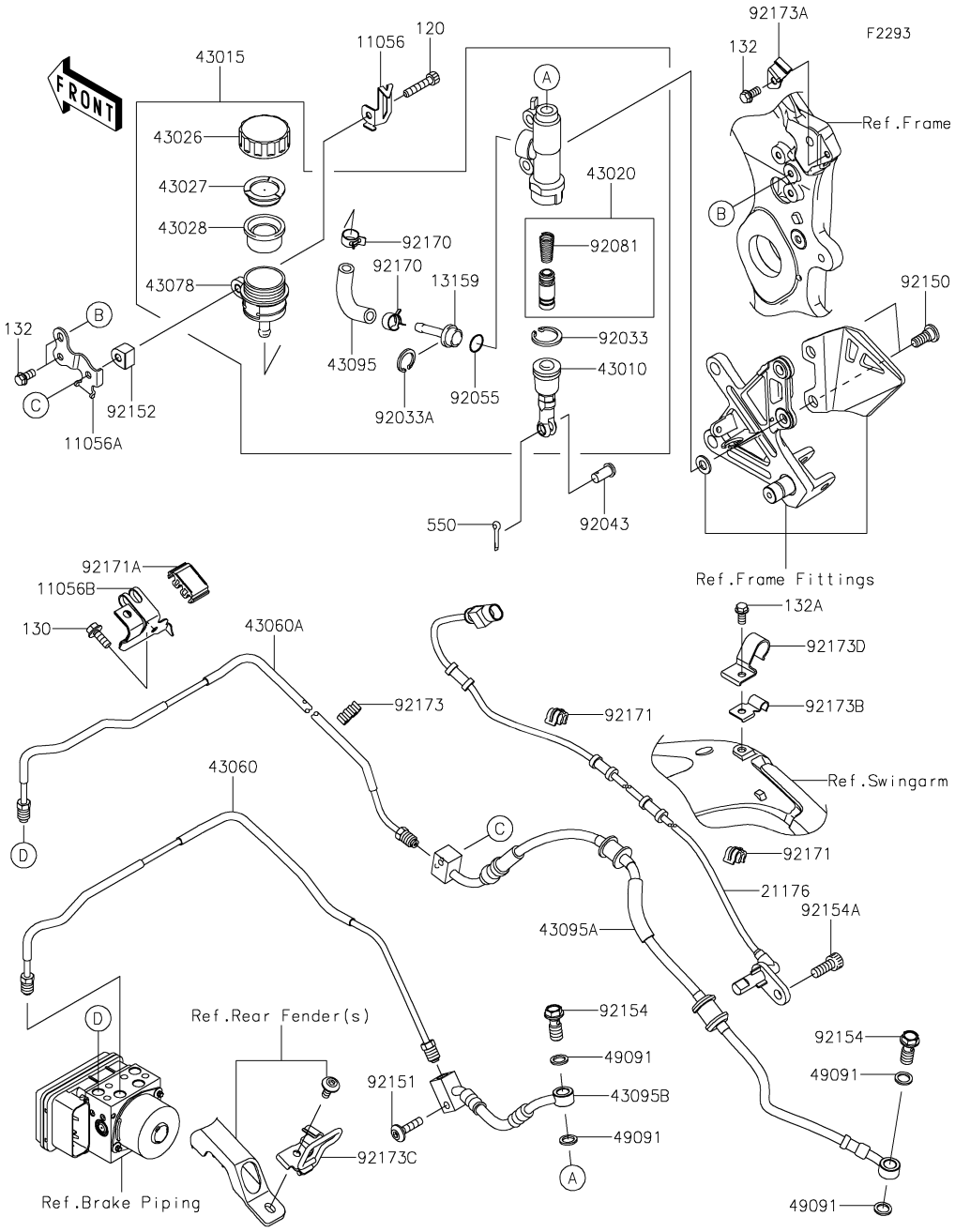

Ref. No.	Part No.	Description	Spec Code	Quantity-ZX1000 '16 SGF	'16 SGFA	'16 SGFB		
550	550AA2015	PIN-COTTER,2.0X15		1	1	1		

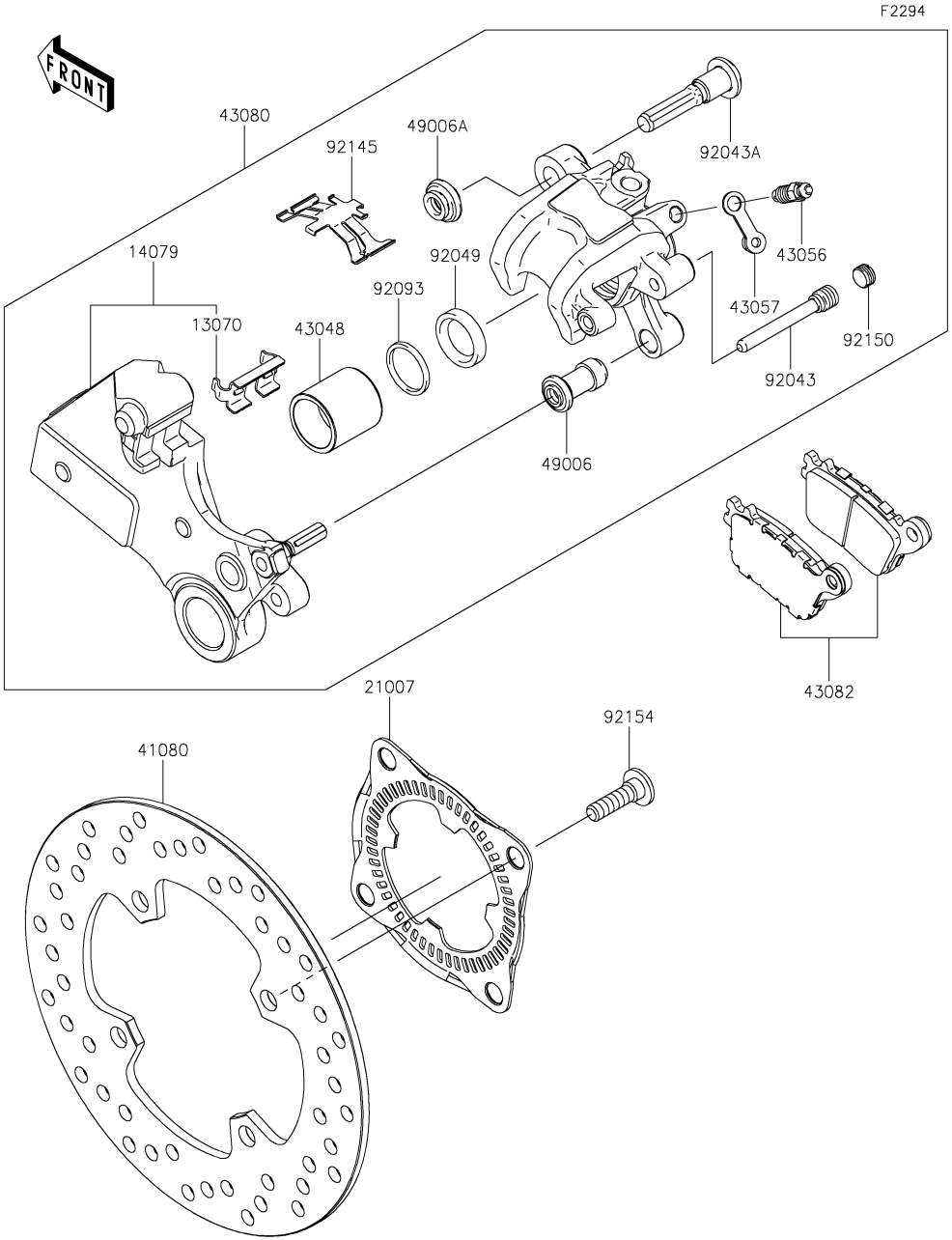

Ref. No.	Part No.	Description	Spec Code	Quantity-ZX1000 '16 SGF	'16 SGFA	'16 SGFB		
13070	13070-0126	GUIDE		1	1	1		
14079	14079-0074	HOLDER-ASSY		1	1	1		
21007	21007-0167	ROTOR,RR WHEEL		1	1	1		
41080	41080-0662	DISC,RR		1	1	1		
43048	43048-0018	PISTON-CALIPER		1	1	1		
43056	43056-1055	BREATHER		1	1	1		
43057	43057-1001	CAP-BREATHER		1	1	1		
43080	43080-0097-DJ	CALIPER-SUB-ASSY,RR,BLACK		1	1	1		
43082	43082-0115	PAD-ASSY-BRAKE		1	1	1		
49006	49006-1088	BOOT,CALIPER		1	1	1		
49006A	49006-1242	BOOT,CALIPER		1	1	1		
92043	92043-0106	PIN,PAD		1	1	1		
92043A	92043-1508	PIN		1	1	1		
92049	92049-1331	SEAL-OIL,PISTON		1	1	1		
92093	92093-1272	SEAL,PISTON		1	1	1		
92145	92145-0810	SPRING		1	1	1		
92150	92150-1692	BOLT,PLUG		1	1	1		
92154	92154-1865	BOLT,SOCKET,8X30		4	4	4		

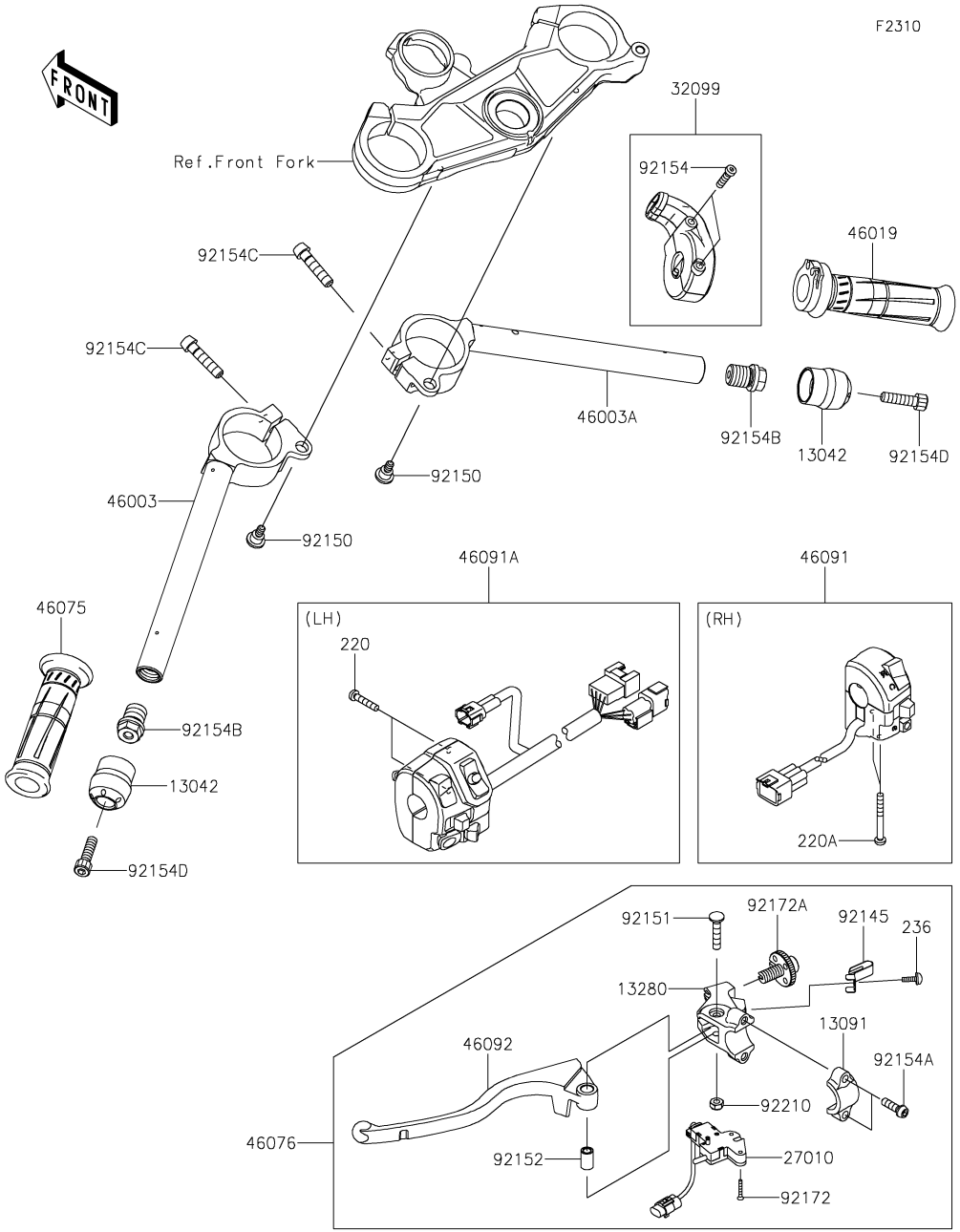

Ref. No.	Part No.	Description	Spec Code	Quantity-ZX1000 '16 SGF	'16 SGFA	'16 SGFB		
13042	13042-5009	WEIGHT,HANDLE		2	2	2		
13091	13091-1624	HOLDER,CLUTCH LEVER		1	1	1		
13280	13280-1160	HOLDER,CLUTCH LEVER		1	1	1		
27010	27010-0827	SWITCH,CLUTCH		1	1	1		
32099	32099-0766	CASE,THROTTLE		1	1	1		
46003	46003-0657	HANDLE,LH		1	1	1		
46003A	46003-0658	HANDLE,RH		1	1	1		
46019	46019-0020	GRIP-ASSY,THROTTLE		1	1	1		
46075	46075-0068	GRIP,LH		1	1	1		
46076	46076-0117	LEVER-ASSY-GRIP,CLUTCH		1	1	1		
46091	46091-0322	HOUSING-ASSY-CONTROL,RH		1	1	1		
46091A	46091-0323	HOUSING-ASSY-CONTROL,LH		1	1	1		
46092	46092-0565	LEVER-GRIP		1	1	1		
92145	92145-1286	SPRING		1	1	1		
92150	92150-1090	BOLT,6MM		2	2	2		
92151	92151-1523	BOLT		1	1	1		
92152	92152-0103	COLLAR		1	1	1		
92154	92154-1530	BOLT,SOCKET,5X35		2	2	2		
92154A	92154-1644	BOLT,SOCKET,6X20		2	2	2		
92154B	92154-1902	BOLT,17X18		2	2	2		
92154C	92154-1969	BOLT,SOCKET,8X35		2	2	2		
92154D	92154-1970	BOLT,SOCKET,8X30		2	2	2		
92172	92172-0183	SCREW,3X16		2	2	2		
92172A	92172-1060	SCREW,ADJUST NUT		1	1	1		
92210	92210-0006	NUT,LOCK,6MM		1	1	1		
220	220AB0525	SCREW-PAN-CROS,5X25		2	2	2		
220A	220C0545	SCREW-PAN-CROS,5X45		2	2	2		
236	236AB0410	SCREW-PAN-WSP-CROS,4X10		1	1	1		

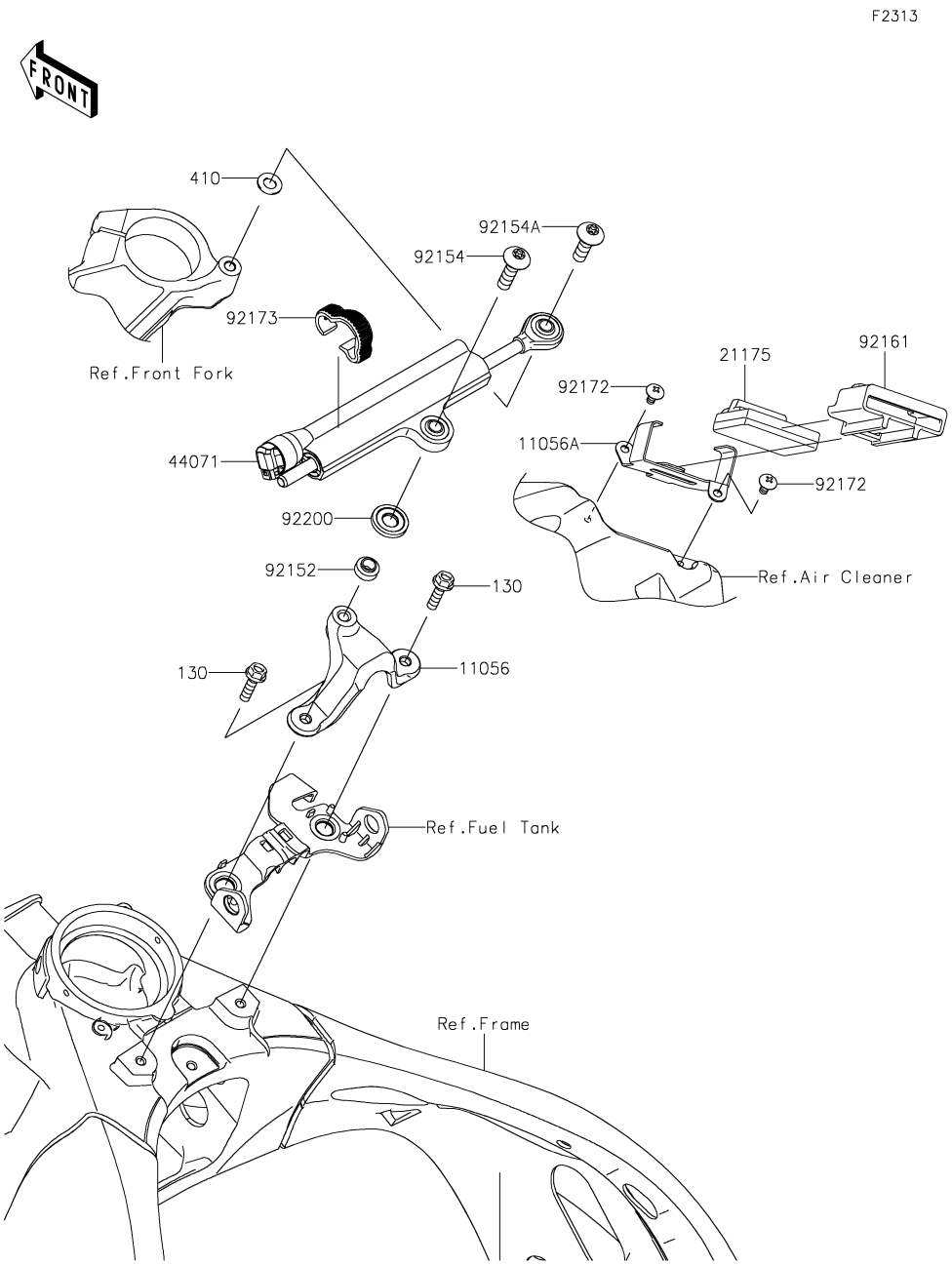

Ref. No.	Part No.	Description	Spec Code	Quantity-ZX1000 '16 SGF	'16 SGFA	'16 SGFB		
11056	11056-0173	BRACKET,STEERING DAMPER		1	1	1		
11056A	11056-7685	BRACKET,ECU		1	1	1		
21175	21175-1155	CONTROL UNIT-ELECTRONIC		1	1	1		
44071	44071-0857	DAMPER-ASSY		1	1	1		
92152	92152-2146	COLLAR,8X10X7.3		1	1	1		
92154	92154-1801	BOLT,TORX,8X30		1	1	1		
92154A	92154-1897	BOLT,TORX,8X26		1	1	1		
92161	92161-1729	DAMPER,ECU		1	1	1		
92172	92172-0262	SCREW,TAPPING,5X10		2	2	2		
92173	92173-1023	CLAMP		1	1	1		
92200	92200-0293	WASHER		1	1	1		
130	130BA0620	BOLT-FLANGED,6X20		2	2	2		
410	410AA0800	WASHER-PLAIN-SMALL,8MM		1	1	1		

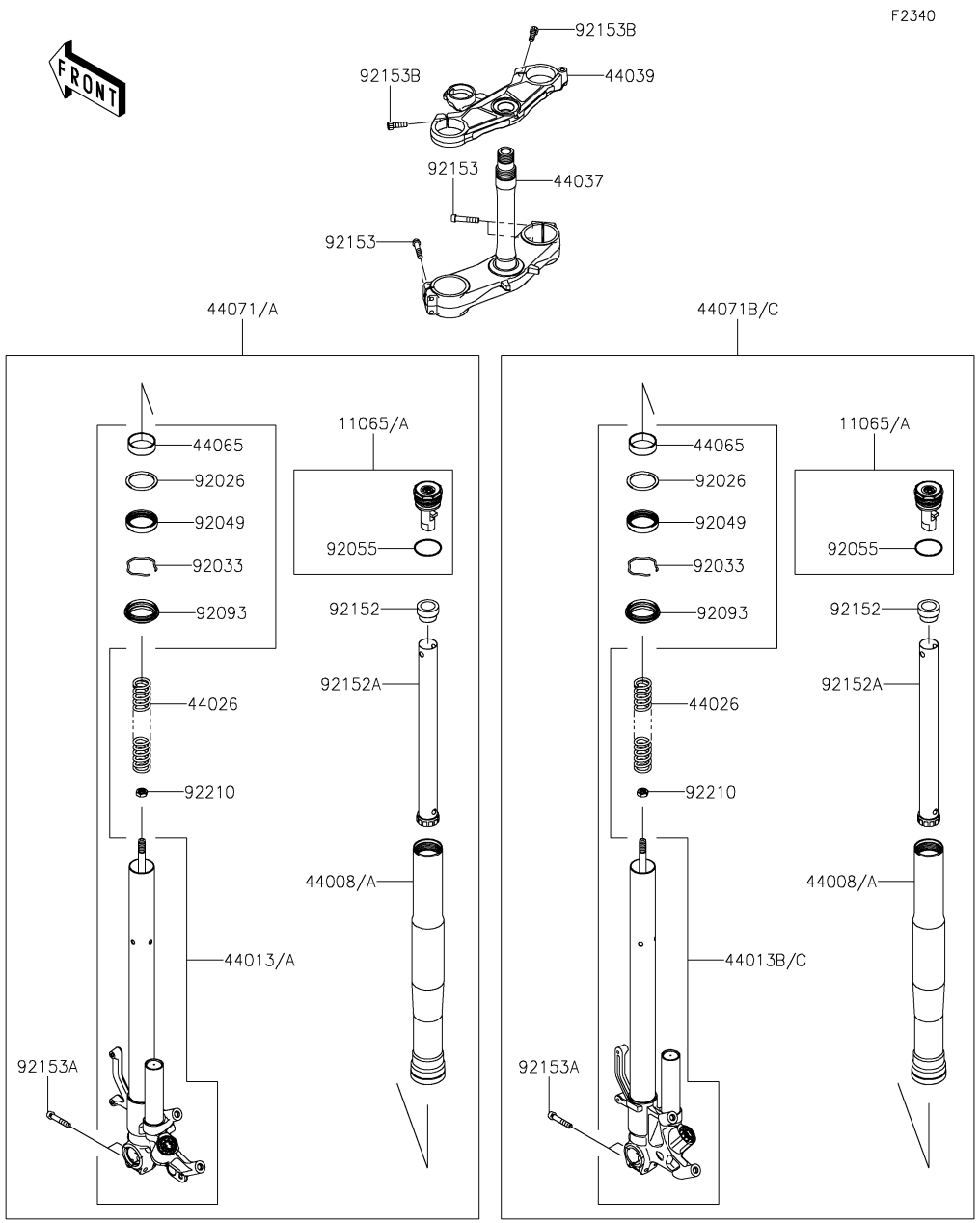

Ref. No.	Part No.	Description	Spec Code	Quantity-ZX1000 '16 SGF	'16 SGFA	'16 SGFB		
11065	11065-0958-10B	CAP,P.RED			2	2		
11065A	11065-0958-50Y	CAP,G.B.GREEN		2				
44008	44008-0082-11G	PIPE-FORK OUTER,GRAY		2				
44008A	44008-0082-499	PIPE-FORK OUTER,BLACK			2	2		
44013	44013-0284-58X	PIPE-FORK INNER,LH,BLACK			1	1		
44013A	44013-0284-58Y	PIPE-FORK INNER,LH,GRAY		1				
44013B	44013-0285-58X	PIPE-FORK INNER,RH,BLACK			1	1		
44013C	44013-0285-58Y	PIPE-FORK INNER,RH,GRAY		1				
44026	44026-0202	SPRING-FRONT FORK		2	2	2		
44037	44037-0159	HOLDER-FORK UNDER		1	1	1		
44039	44039-0156	HOLDER-FORK UPPER		1	1	1		
44065	44065-0026	BUSHING-FRONT FORK		2	2	2		
44071	44071-1207-58S	DAMPER-ASSY,LH,BLACK			1	1		
44071A	44071-1207-58T	DAMPER-ASSY,LH,GRAY		1				
44071B	44071-1208-58S	DAMPER-ASSY,RH,BLACK			1	1		
44071C	44071-1208-58T	DAMPER-ASSY,RH,GRAY		1				
92026	92026-0165	SPACER		2	2	2		
92033	92033-1222	RING-SNAP		2	2	2		
92049	92049-0064	SEAL-OIL		2	2	2		
92055	92055-1497	RING-O,FORK CAP		2	2	2		
92093	92093-0042	SEAL,DUST		2	2	2		
92152	92152-2238	COLLAR		2	2	2		
92152A	92152-2239	COLLAR		2	2	2		
92153	92153-0853	BOLT		4	4	4		
92153A	92153-0854	BOLT		4	4	4		
92153B	92153-1625	BOLT,SOCKET,8X25		2	2	2		
92210	92210-1506	NUT		2	2	2		

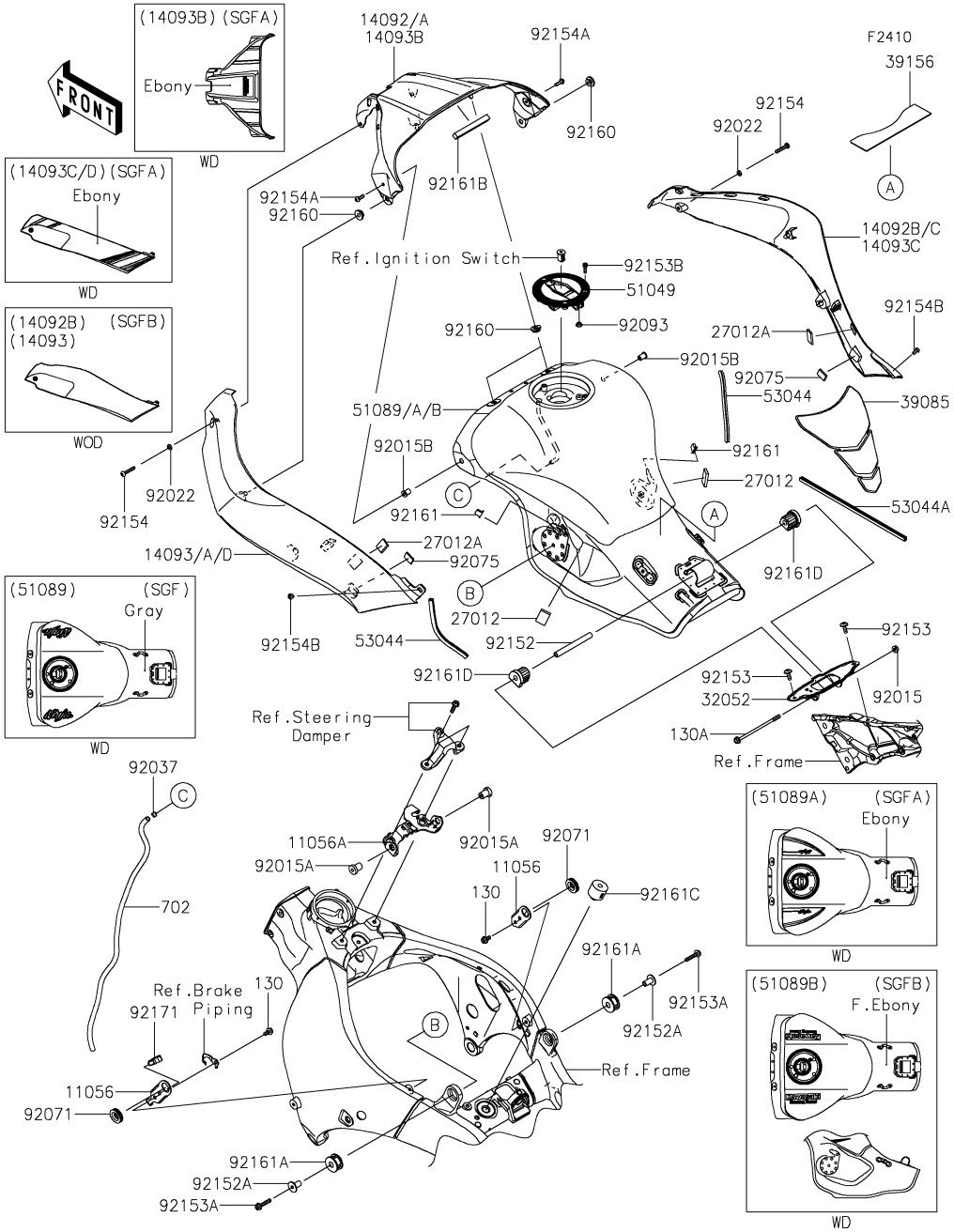

Ref. No.	Part No.	Description	Spec Code	Quantity-ZX1000 '16 SGF	'16 SGFA	'16 SGFB		
11056	11056-0242	BRACKET,TANK COVER,SIDE		2	2	2		
11056A	11056-7782	BRACKET,TANK COVER,FR		1	1	1		
14092	14092-0786-45L	COVER,TANK,CNT,F.EBONY				1		
14092A	14092-0786-51B	COVER,TANK,CNT,M.M.C.GRAY		1				
14092B	14092-0788-45L	COVER,TANK,RH,F.EBONY				1		
14092C	14092-0788-51B	COVER,TANK,RH,M.M.C.GRAY		1				
14093	14093-0342-45L	COVER,TANK,LH,F.EBONY				1		
14093A	14093-0342-51B	COVER,TANK,LH,M.M.C.GRAY		1				
14093B	14093-5109-H8	COVER,TANK,CNT,EBONY			1			
14093C	14093-5110-H8	COVER,TANK,RH,EBONY			1			
14093D	14093-5111-H8	COVER,TANK,LH,EBONY			1			
27012	27012-0170	HOOK		2	2	2		
27012A	27012-0171	HOOK		2	2	2		
32052	32052-0154	BRACKET-TANK		1	1	1		
39085	39085-0054	PAD-TANK		1	1	1		
39156	39156-0745	PAD,40X180X1.0		1	1	1		
51049	51049-0721	CAP-TANK		1	1	1		
51089	51089-5418-51B	TANK-COMP-FUEL,M.M.C.GRAY		1				
51089A	51089-5419-H8	TANK-COMP-FUEL,EBONY			1			
51089B	51089-5421-45L	TANK-COMP-FUEL,F.EBONY				1		
53044	53044-1276	TRIM,L=157		2	2	2		
53044A	53044-1296	TRIM		1	1	1		
92015	92015-1367	NUT,FLANGED,6MM		1	1	1		
92015A	92015-1692	NUT,RUBBER,6MM		2	2	2		
92015B	92015-1757	NUT,WELL,5MM		2	2	2		
92022	92022-183	WASHER,6.2X11X1.5		2	2	2		
92037	92037-010	CLAMP,TUBE		1	1	1		
92071	92071-1043	GROMMET		2	2	2		
92075	92075-1982	DAMPER,IGNITION		2	2	2		
92093	92093-1030	SEAL,FUEL TANK CAP		1	1	1		
92152	92152-1182	COLLAR,6.8X10X60		1	1	1		
92152A	92152-2200	COLLAR,6.8X10X20.1		2	2	2		
92153	92153-1526	BOLT,SOCKET,6X16		2	2	2		
92153A	92153-1580	BOLT,FLANGED,6X28		2	2	2		
92153B	92153-1616	BOLT,SOCKET,5X16		3	3	3		
92154	92154-0206	BOLT,SOCKET,6X30		2	2	2		
92154A	92154-0209	BOLT,SOCKET,5X16		2	2	2		
92154B	92154-0211	BOLT,SOCKET,5X10		2	2	2		
92160	92160-1613	DAMPER		4	4	4		
92161	92161-0365	DAMPER		2	2	2		

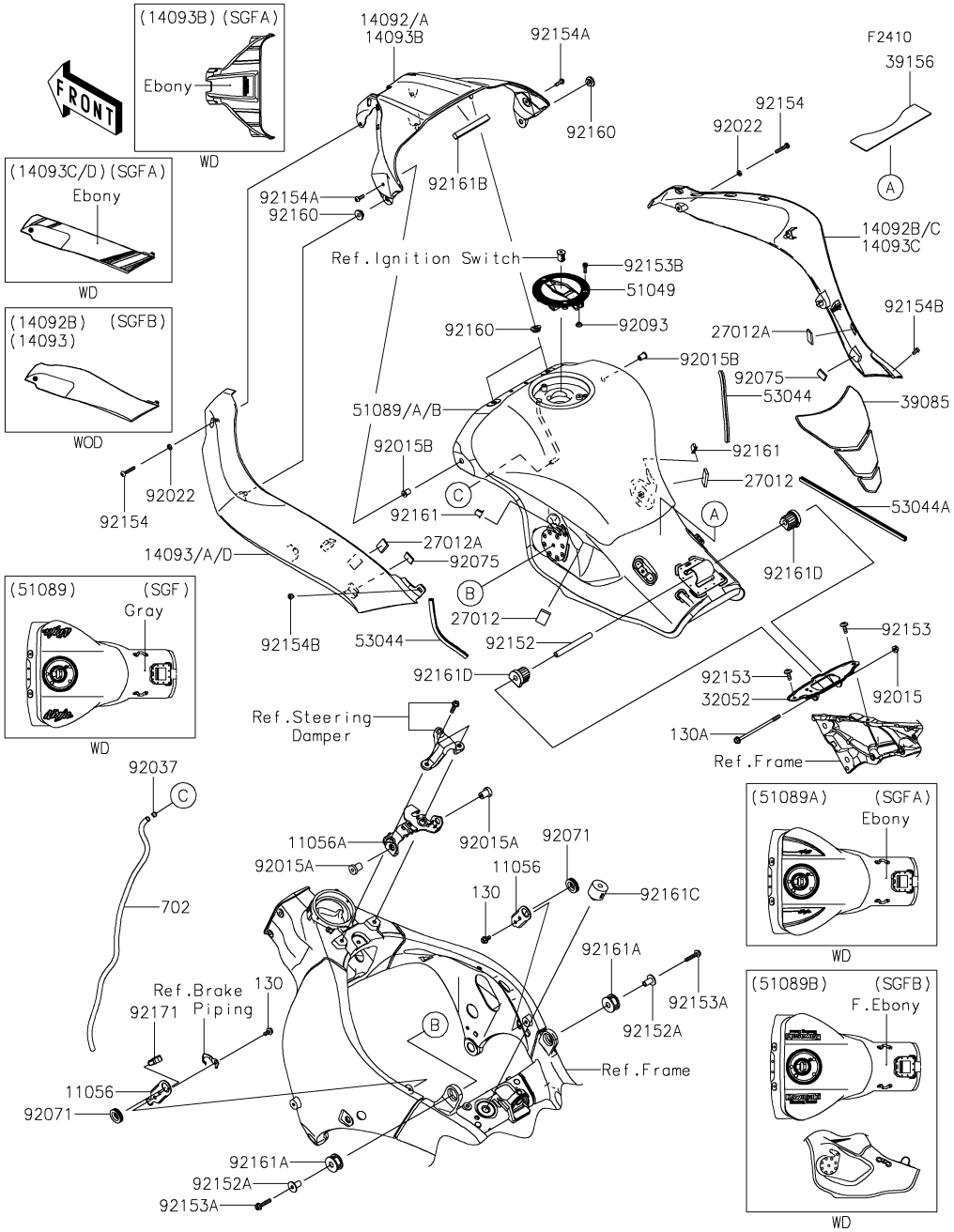

Ref. No.	Part No.	Description	Spec Code	Quantity-ZX1000 '16 SGF	'16 SGFA	'16 SGFB		
92161A	92161-0869	DAMPER,10X30X16		2	2	2		
92161B	92161-0963	DAMPER,10X90X10		1	1	1		
92161C	92161-1116	DAMPER		1	1	1		
92161D	92161-1330	DAMPER,FUEL TANK,RR		2	2	2		
92171	92171-0782	CLAMP		1	1	1		
130	130BA0612	BOLT-FLANGED,6X12		2	2	2		
130A	130BA0675	BOLT-FLANGED,6X75		1	1	1		
702	702A06660	TUBE-RUBBER,6X9X660		1	1	1		

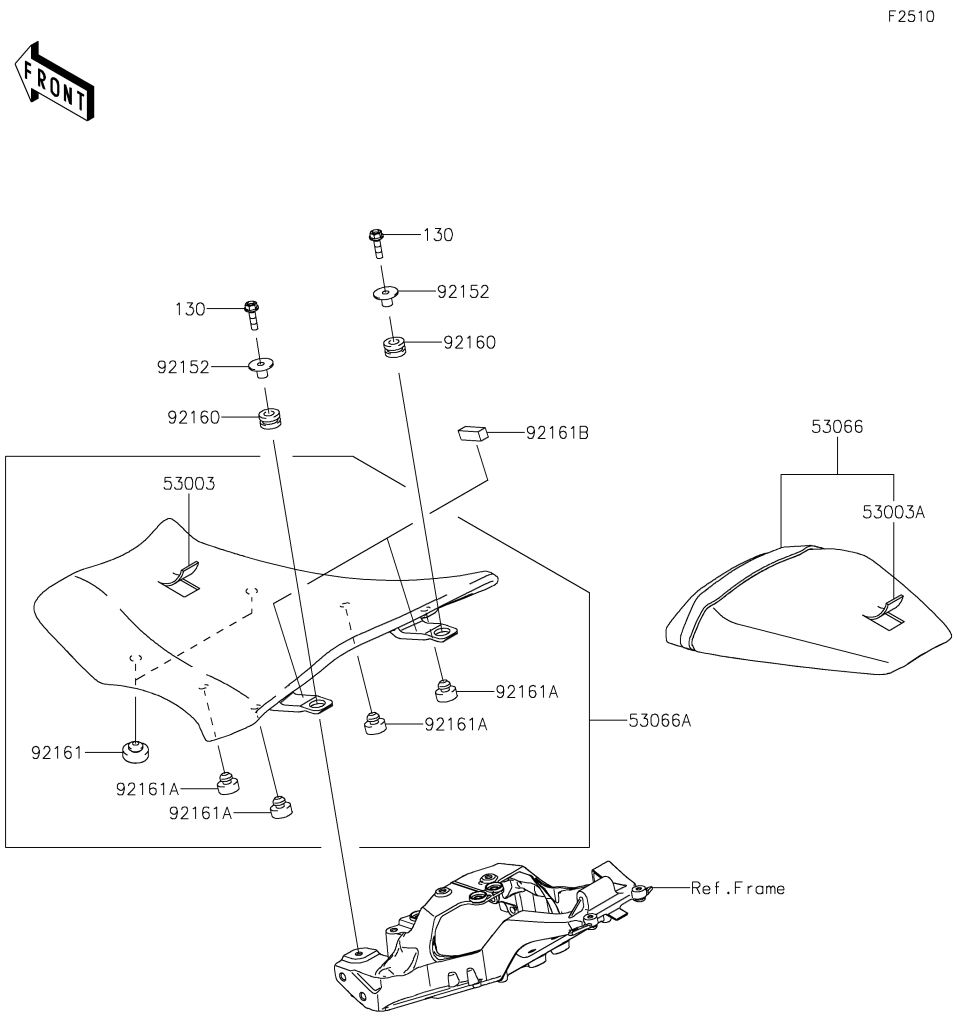

Ref. No.	Part No.	Description	Spec Code	Quantity-ZX1000 '16 SGF	'16 SGFA	'16 SGFB		
53003	53003-0209-MA	LEATHER,FR SEAT,BLACK		1	1	1		
53003A	53003-0420-MA	LEATHER,RR SEAT,BLACK		1	1	1		
53066	53066-0506-12Y	SEAT-ASSY,RR,BLACK/BLACK		1	1	1		
53066A	53066-0521-MA	SEAT-ASSY,FR,BLACK		1	1	1		
92152	92152-0365	COLLAR		2	2	2		
92160	92160-1167	DAMPER,10X20X12		2	2	2		
92161	92161-0095	DAMPER,SEAT		2	2	2		
92161A	92161-0223	DAMPER		4	4	4		
92161B	92161-1835	DAMPER,10X30X10		2	2	2		
130	130BA0622	BOLT-FLANGED,6X22		2	2	2		

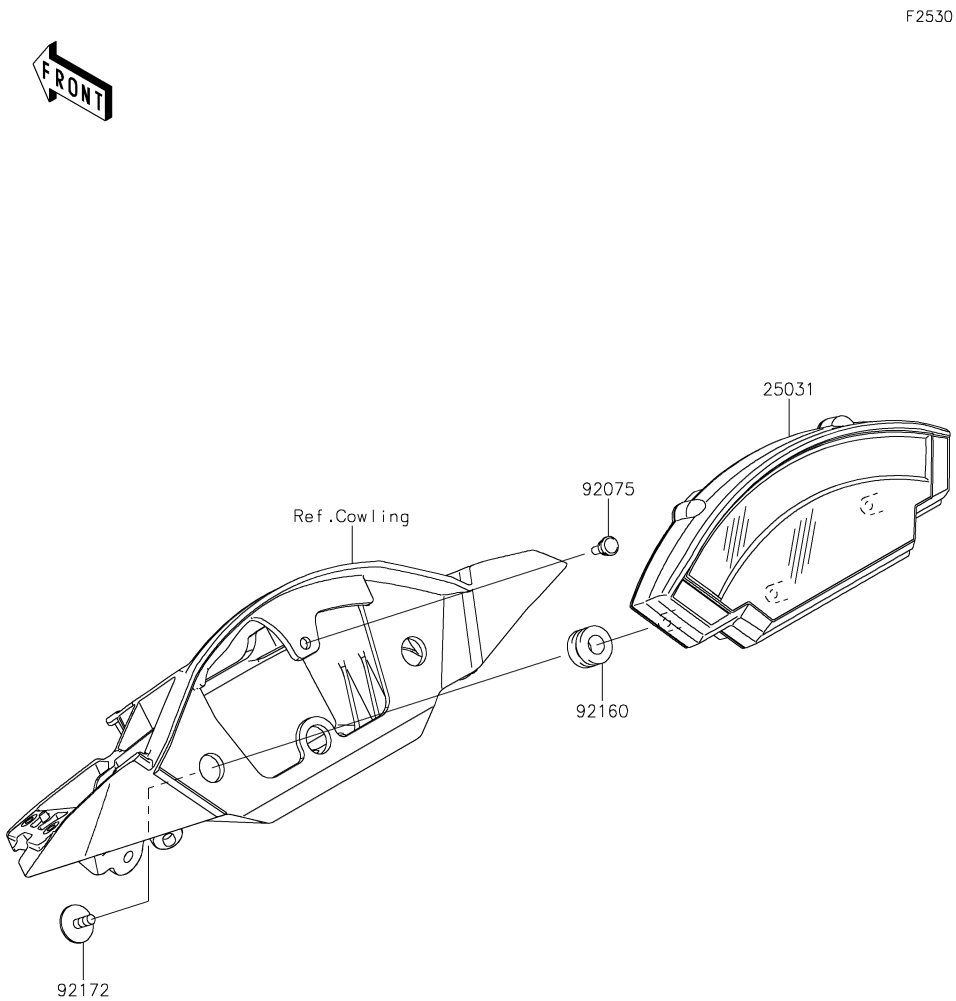

Ref. No.	Part No.	Description	Spec Code	Quantity-ZX1000				
				'16	'16	'16		
				SGF	SGFA	SGFB		
25031	25031-0659	METER-ASSY,COMBINATION		1	1	1		
92075	92075-1808	DAMPER,6X10X15		1	1	1		
92160	92160-1167	DAMPER,10X20X12		3	3	3		
92172	92172-0441	SCREW,TAPPING,WP,5X14		3	3	3		

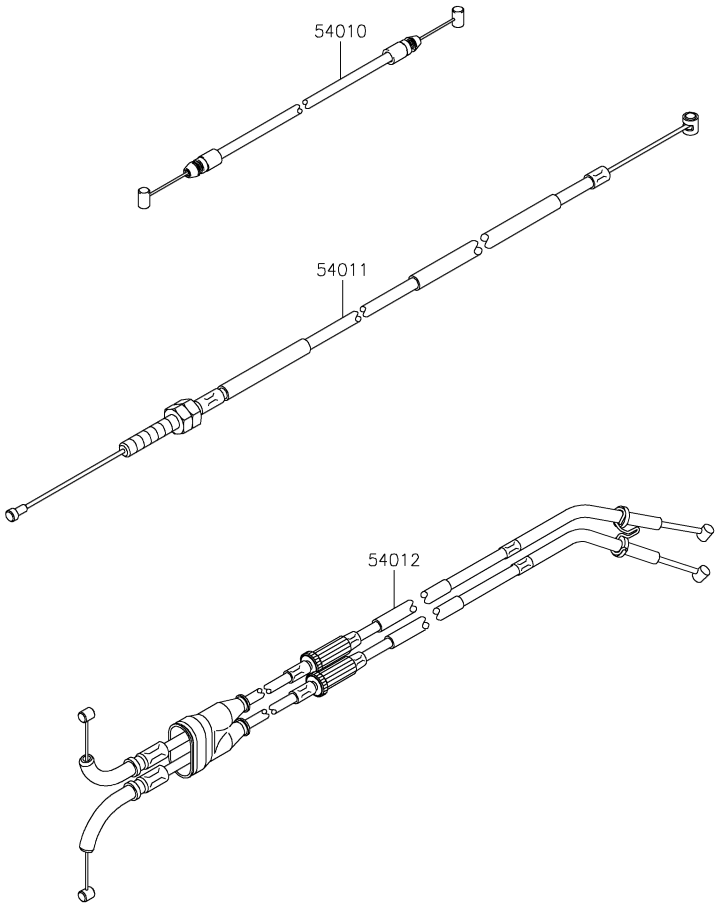

Ref. No.	Part No.	Description	Spec Code	Quantity-ZX1000 '16 SGF	'16 SGFA	'16 SGFB		
54010	54010-0609	CABLE,SEAT LOCK		1	1	1		
54011	54011-0612	CABLE-CLUTCH		1	1	1		
54012	54012-0631	CABLE-THROTTLE		1	1	1		

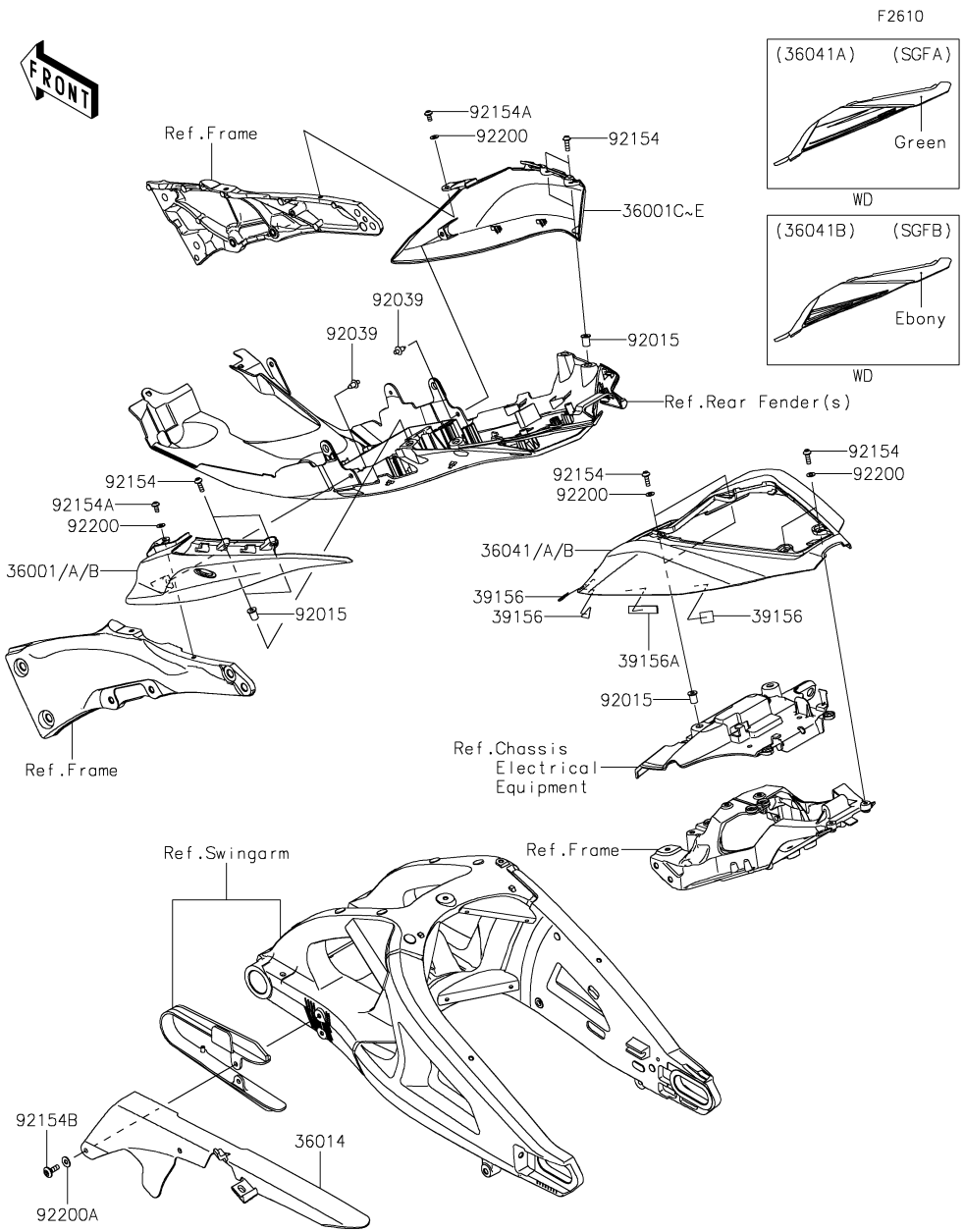

Ref. No.	Part No.	Description	Spec Code	Quantity-ZX1000 '16 SGF	'16 SGFA	'16 SGFB		
36001	36001-0640-45L	COVER-SIDE,TAIL,LH,F.EBONY				1		
36001A	36001-0640-51B	COVER-SIDE,TAIL,LH,M.M.C.GRAY		1				
36001B	36001-0640-777	COVER-SIDE,TAIL,LH,L.GREEN			1			
36001C	36001-0641-45L	COVER-SIDE,TAIL,RH,F.EBONY				1		
36001D	36001-0641-51B	COVER-SIDE,TAIL,RH,M.M.C.GRAY		1				
36001E	36001-0641-777	COVER-SIDE,TAIL,RH,L.GREEN			1			
36014	36014-0062	CASE-CHAIN		1	1	1		
36041	36041-0024-51B	COVER-TAIL,M.M.C.GRAY		1				
36041A	36041-5113-777	COVER-TAIL,L.GREEN			1			
36041B	36041-5116-45L	COVER-TAIL,F.EBONY				1		
39156	39156-1784	PAD,15X20X0.2		6	6	6		
39156A	39156-1924	PAD,10X50X2		2	2	2		
92015	92015-1757	NUT,WELL,5MM		6	6	6		
92039	92039-0068	RIVET		2	2	2		
92154	92154-0209	BOLT,SOCKET,5X16		8	8	8		
92154A	92154-0211	BOLT,SOCKET,5X10		2	2	2		
92154B	92154-1694	BOLT,SOCKET,6X18		1	1	1		
92200	92200-0006	WASHER,NYLONE,5.3X11.5X0.5		6	6	6		
92200A	92200-1762	WASHER,6.2X15X1.2		1	1	1		

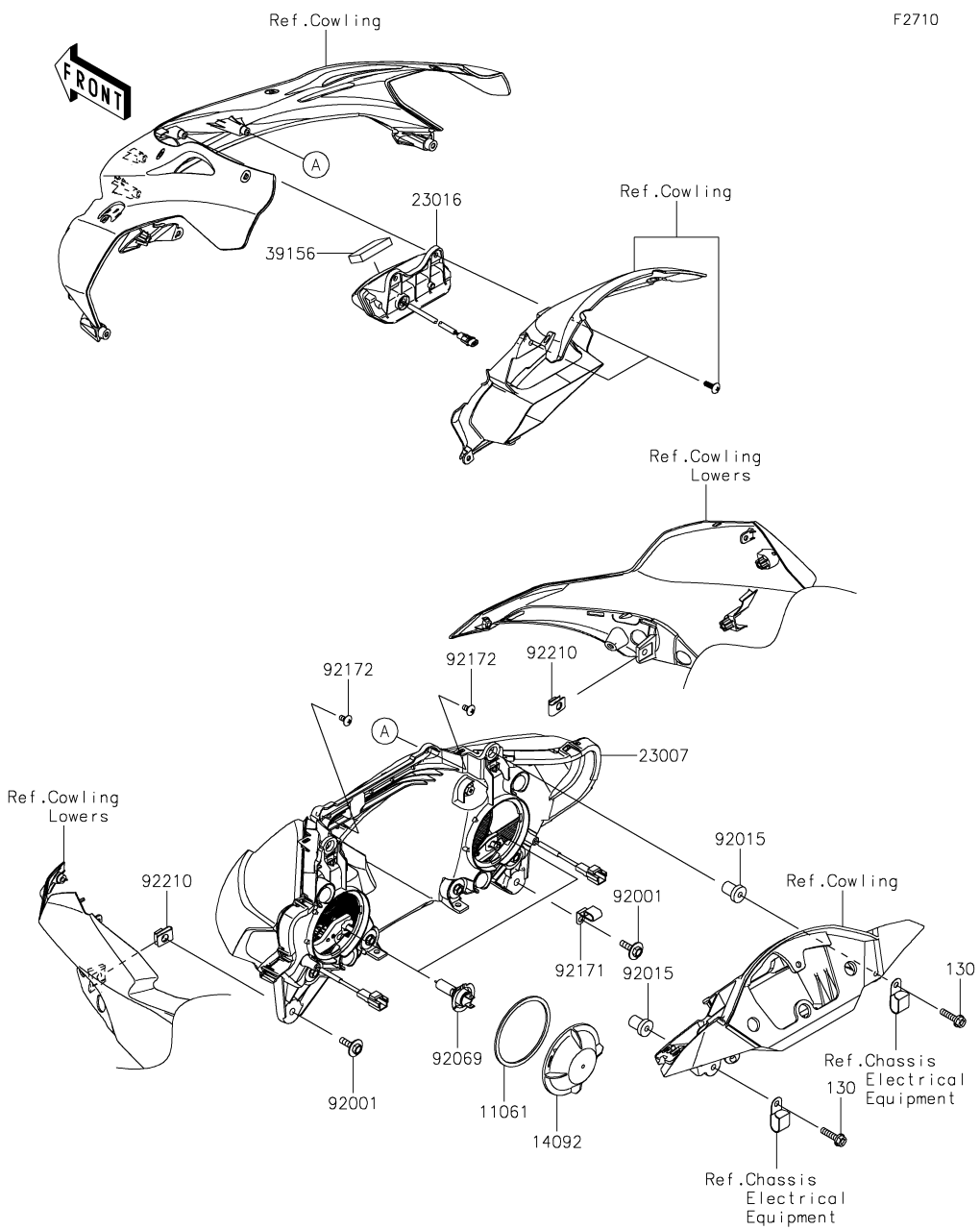

Ref. No.	Part No.	Description	Spec Code	Quantity-ZX1000 '16 SGF	'16 SGFA	'16 SGFB		
11061	11061-0746	GASKET		2	2	2		
14092	14092-0793	COVER,HEAD LAMP		2	2	2		
23007	23007-0203	LENS-COMP		1	1	1		
23016	23016-0045	LAMP-ASSY,POSITION LAMP		1	1	1		
39156	39156-2113	PAD,45X24X8		1	1	1		
92001	92001-1774	BOLT,UPSET-WP,6X22		2	2	2		
92015	92015-1692	NUT,RUBBER,6MM		2	2	2		
92069	92069-0053	BULB,12V 55W,H7		2	2	2		
92171	92171-0926	CLAMP		1	1	1		
92172	92172-0335	SCREW,TAPPING,5X10		2	2	2		
92210	92210-0130	NUT		2	2	2		
130	130BB0625	BOLT-FLANGED,6X25		2	2	2		

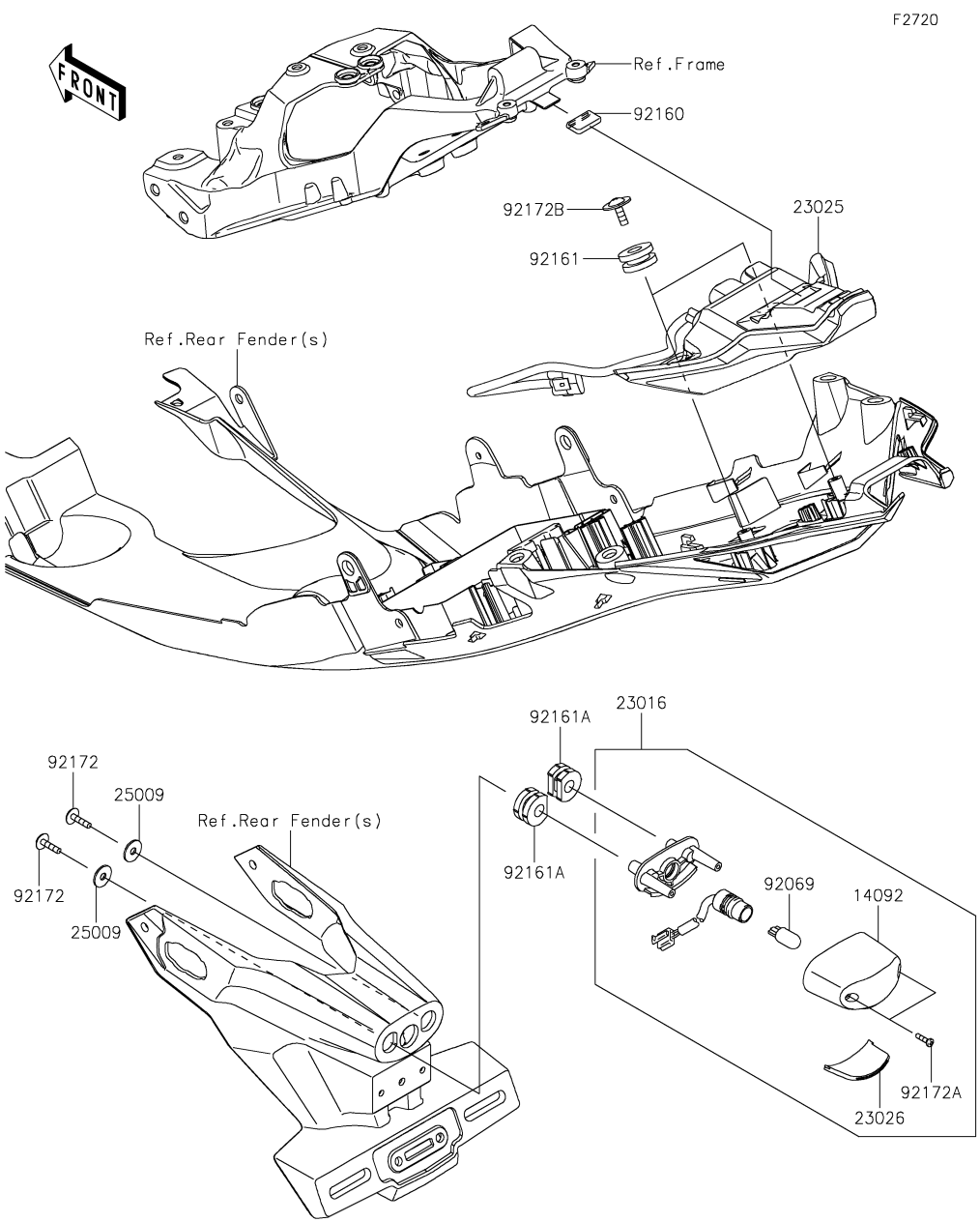

Ref. No.	Part No.	Description	Spec Code	Quantity-ZX1000				
				'16	'16	'16		
				SGF	SGFA	SGFB		
14092	14092-0001	COVER,LICENSE LAMP		1	1	1		
23016	23016-0561	LAMP-ASSY,LICENSE		1	1	1		
23025	23025-0332	LAMP-TAIL,LED		1	1	1		
23026	23026-0023	LENS,LICENCE LAMP		1	1	1		
25009	25009-004	WASHER,5.2X16X1.2		2	2	2		
92069	92069-1016	BULB,12V 5W		1	1	1		
92160	92160-1190	DAMPER		1	1	1		
92161	92161-0163	DAMPER		2	2	2		
92161A	92161-0776	DAMPER		2	2	2		
92172	92172-0238	SCREW,TAPPING,5X16		2	2	2		
92172A	92172-0343	SCREW,TAPPING,2.9X13		2	2	2		
92172B	92172-0481	SCREW,TAPTITE,5X16		2	2	2		

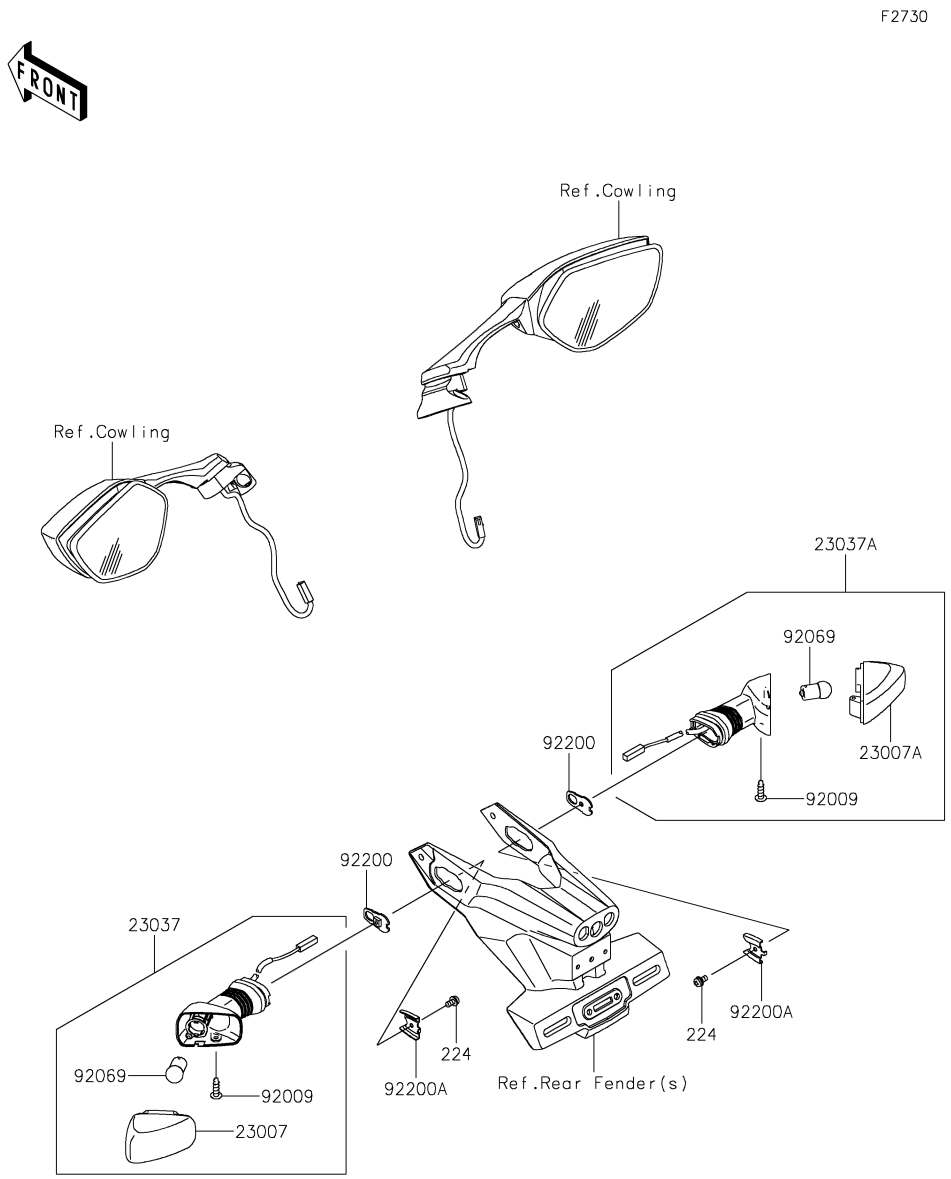

Ref. No.	Part No.	Description	Spec Code	Quantity-ZX1000 '16 SGF	'16 SGFA	'16 SGFB		
23007	23007-0102	LENS-COMP,SIGNAL LAMP,RR,LH		1	1	1		
23007A	23007-0103	LENS-COMP,SIGNAL LAMP,RR,RH		1	1	1		
23037	23037-0145	LAMP-ASSY-SIGNAL,RR,LH		1	1	1		
23037A	23037-0146	LAMP-ASSY-SIGNAL,RR,RH		1	1	1		
92009	92009-1158	SCREW,4X16,BLACK		2	2	2		
92069	92069-0020	BULB,12V 10W		2	2	2		
92200	92200-0854	WASHER,NUT 4MM		2	2	2		
92200A	92200-0855	WASHER		2	2	2		
224	224AB0408	SCREW-PAN-WP-CROS,4X8		2	2	2		

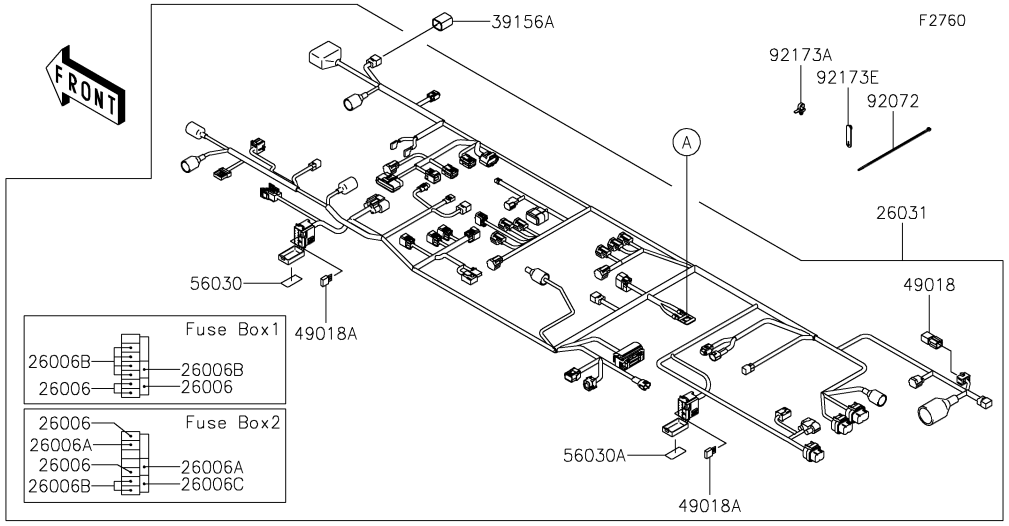

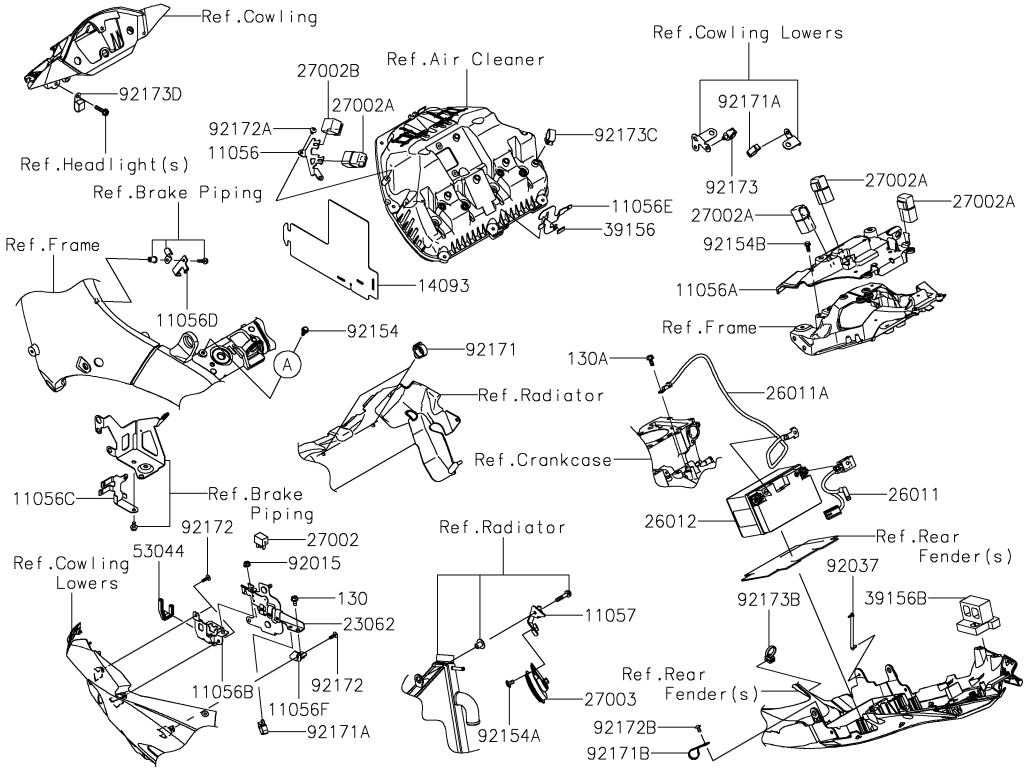

Ref. No.	Part No.	Description	Spec Code	Quantity-ZX1000 '16 SGF	'16 SGFA	'16 SGFB		
11056	11056-7706	BRACKET,RELAY		1	1	1		
11056A	11056-7717	BRACKET,ECU		1	1	1		
11056B	11056-7809	BRACKET,FUSE		1	1	1		
11056C	11056-7816	BRACKET,SHIFTER&GEAR POSITION		1	1	1		
11056D	11056-7828	BRACKET,FRAME,LH		1	1	1		
11056E	11056-7955	BRACKET,HARNESS		1	1	1		
11056F	11056-7959	BRACKET,CONNECTOR,RR		1	1	1		
11057	11057-0017	BRACKET,HORN		1	1	1		
14093	14093-0476	COVER,RELAY		1	1	1		
23062	23062-0873	BRACKET-COMP,CONNECTOR		1	1	1		
26006	26006-0001	FUSE,MINI BLADE,15A,BLUE		5	5	5		
26006A	26006-0020	FUSE,MINI BLADE,25A,NATURAL		2	2	2		
26006B	26006-1078	FUSE,MINI BLADE,10A,RED		7	7	7		
26006C	26006-1080	FUSE,MINI BLADE,30A,GREEN		1	1	1		
26011	26011-0913	WIRE-LEAD,BATTERY(+)		1	1	1		
26011A	26011-0943	WIRE-LEAD,BATTERY(-)		1	1	1		
26012	26012-0564	BATTERY,YTZ10S,12V 8.6AH		1	1	1		
26031	26031-2115	HARNESS,MAIN		1	1	1		
27002	27002-0027	RELAY-ASSY,HEAD LAMP		1	1	1		
27002A	27002-1086	RELAY-ASSY		4	4	4		
27002B	27002-1097	RELAY-ASSY,SIGNAL LAMP		1	1	1		
27003	27003-0113	HORN		1	1	1		
39156	39156-0389	PAD,HEAT GUARD		1	1	1		
39156A	39156-1886	PAD,DIAG. CONNECTOR		1	1	1		
39156B	39156-1993	PAD,DIAG/DONGLE		1	1	1		
49018	49018-0005	DIODE		1	1	1		
49018A	49018-0007	DIODE		2	2	2		
53044	53044-0018	TRIM		1	1	1		
56030	56030-0955	LABEL,FUSE1		1	1	1		
56030A	56030-0956	LABEL,FUSE2		1	1	1		
92015	92015-1367	NUT,FLANGED,6MM		1	1	1		
92037	92037-1903	CLAMP,SPEED,L=80.5		1	1	1		
92072	92072-0782	BAND,202X3.6		1	1	1		
92154	92154-0551	BOLT,FLANGED,6X16		1	1	1		
92154A	92154-0774	BOLT,SOCKET,6X10		1	1	1		
92154B	92154-1864	BOLT,FLANGED,6X14		4	4	4		
92171	92171-0068	CLAMP,CLIP,DIA=20		2	2	2		
92171A	92171-0316	CLAMP,BRAKE HOSE		2	2	2		
92171B	92171-1279	CLAMP		1	1	1		
92172	92172-0175	SCREW,TAPPING,5X16		3	3	3		

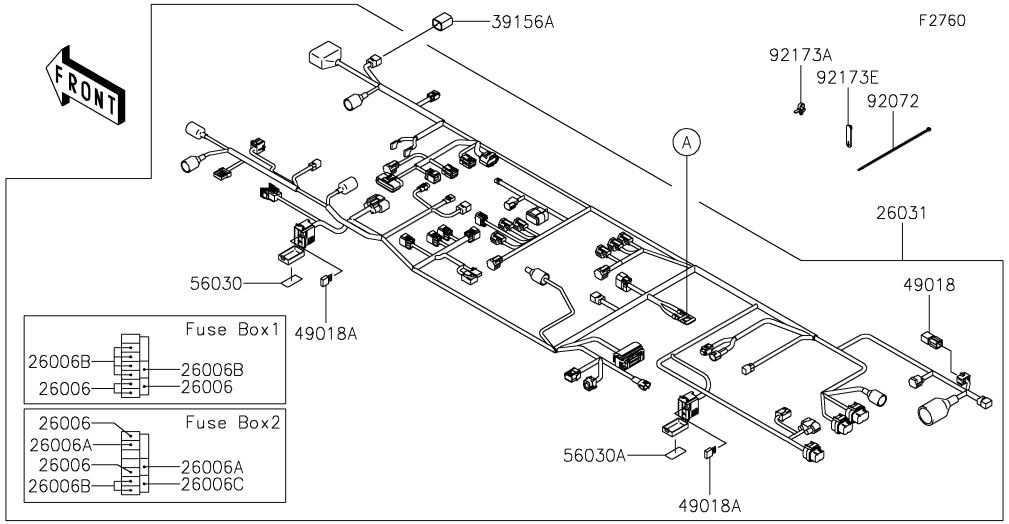

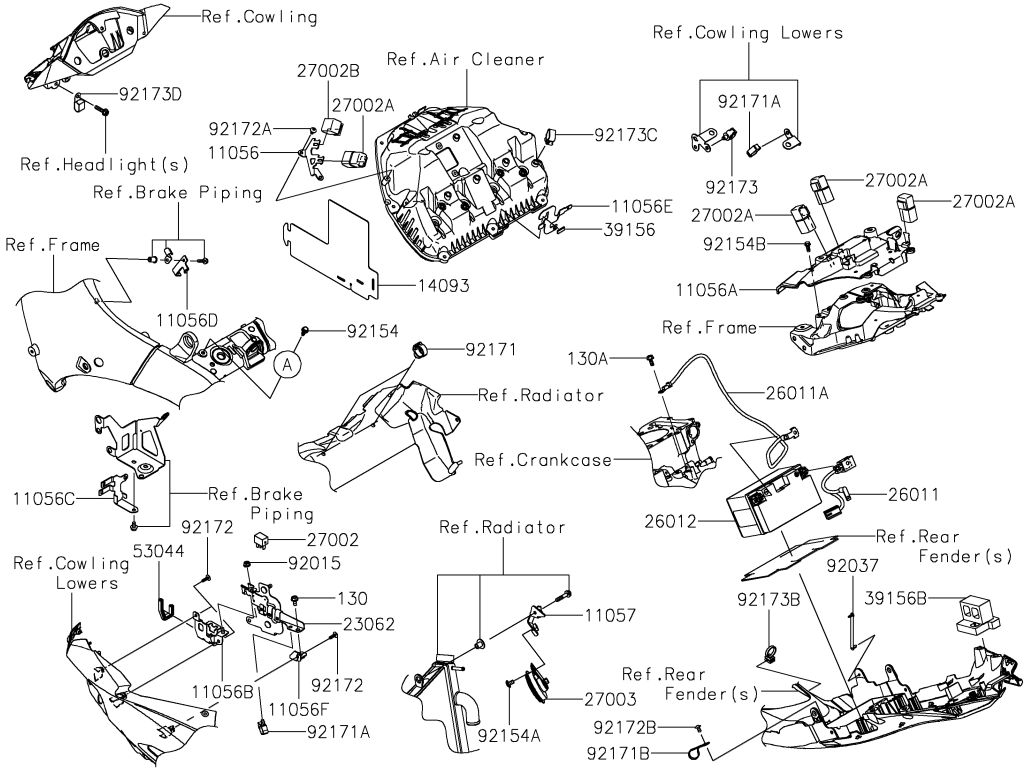

Ref. No.	Part No.	Description	Spec Code	Quantity-ZX1000 '16 SGF	'16 SGFA	'16 SGFB		
92172A	92172-0262	SCREW,TAPPING,5X10		2	2	2		
92172B	92172-0335	SCREW,TAPPING,5X10		1	1	1		
92173	92173-0736	CLAMP,12MM DIA.		1	1	1		
92173A	92173-0742	CLAMP		1	1	1		
92173B	92173-0791	CLAMP		1	1	1		
92173C	92173-0861	CLAMP		1	1	1		
92173D	92173-1009	CLAMP,68MM		2	2	2		
92173E	92173-1229	CLAMP,RUBBER PLATE		4	4	4		
130	130BA0612	BOLT-FLANGED,6X12		1	1	1		
130A	130BA0614	BOLT-FLANGED,6X14		1	1	1		

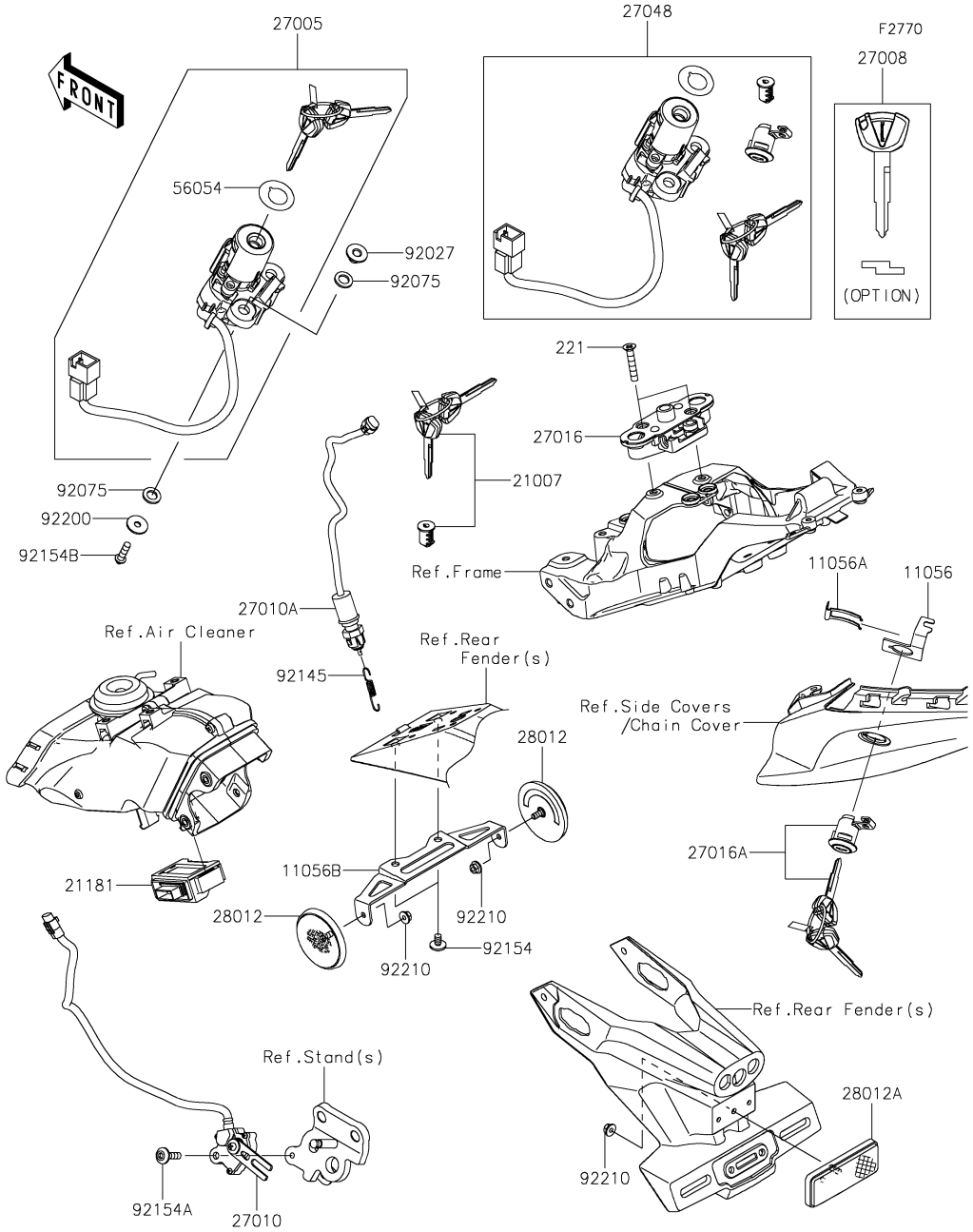

Ref. No.	Part No.	Description	Spec Code	Quantity-ZX1000 '16 SGF	'16 SGFA	'16 SGFB		
11056	11056-0237	BRACKET		1	1	1		
11056A	11056-0238	BRACKET,CLASP		1	1	1		
11056B	11056-4496	BRACKET,REFLECTOR		1	1	1		
21007	21007-5068	ROTOR,LOCK,TANK CAP		1	1	1		
21181	21181-0010	AMPLIFIER,IMMOBI		1	1	1		
27005	27005-0620	SWITCH-ASSY-IGNITION		1	1	1		
27008	27008-0065 (OPTION)	KEY-LOCK,BLANK,IMMOBI,SUB		1	1	1		
27010	27010-0003	SWITCH,SIDE STAND		1	1	1		
27010A	27010-0836	SWITCH,STOP		1	1	1		
27016	27016-0035	LOCK-ASSY,SEAT STRIKER		1	1	1		
27016A	27016-5391	LOCK-ASSY,SEAT		1	1	1		
27048	27048-5105	SWITCH-ASSY		1	1	1		
28012	28012-0002	REFLECTOR-REFLEX		2	2	2		
28012A	28012-1077	REFLECTOR-REFLEX		1	1	1		
56054	56054-1981	MARK,IGNITION SWITCH		1	1	1		
92027	92027-1045	COLLAR,L=9.6		2	2	2		
92075	92075-1564	DAMPER		4	4	4		
92145	92145-0091	SPRING,REAR BRAKE SWITCH		1	1	1		
92154	92154-1693	BOLT,SOCKET,6X10		2	2	2		
92154A	92154-1810	BOLT,SOCKET,6X22		1	1	1		
92154B	92154-1858	BOLT,TORX,6X22		2	2	2		
92200	92200-0212	WASHER,6X20X1.6		2	2	2		
92210	92210-0007	NUT,FLANGED,5MM		3	3	3		
221	221AB0635	SCREW-CSK-CROS,6X35		2	2	2		

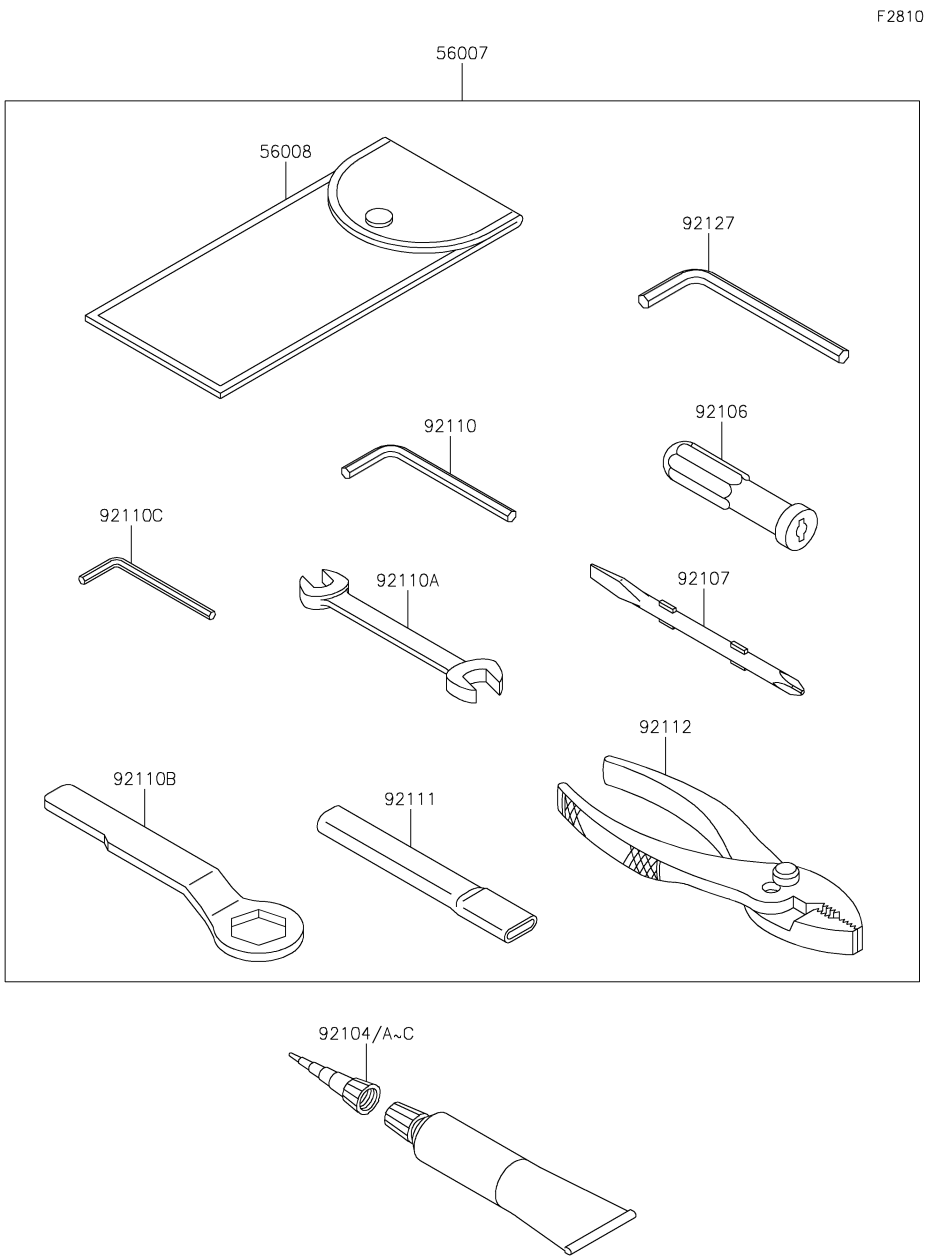

Ref. No.	Part No.	Description	Spec Code	Quantity-ZX1000 '16 SGF	'16 SGFA	'16 SGFB		
56007	56007-0141	TOOL-KIT		1	1	1		
56008	56008-1075	BAG,TOOL		1	1	1		
92104	92104-0004	GASKET-LIQUID,TB1211F,CLEAR		1	1	1		
92104A	92104-1063	GASKET-LIQUID,TB1216,GRAY		1	1	1		
92104B	92104-1064	GASKET-LIQUID,TB1216B,BLACK		1	1	1		
92104C	92104-2068	GASKET-LIQUID,TB1207B,BLACK		1	1	1		
92106	92106-1001	GRIP-SCREW DRIVER		1	1	1		
92107	92107-1051	TOOL-DRIVER,#2PHILLIPS&SLOT		1	1	1		
92110	92110-1015	TOOL-WRENCH,ALLEN,5MM		1	1	1		
92110A	92110-1152	TOOL-WRENCH,OPEN END,10X12		1	1	1		
92110B	92110-1161	TOOL-WRENCH,BOX END,32MM		1	1	1		
92110C	92110-3703	TOOL-WRENCH,ALLEN,4MM		1	1	1		
92111	92111-1051	TOOL-BAR,BOX END WRENCH		1	1	1		
92112	92112-1001	TOOL-PLIERS		1	1	1		
92127	92127-003	TOOL-WRENCH,ALLEN,6MM		1	1	1		

F2860

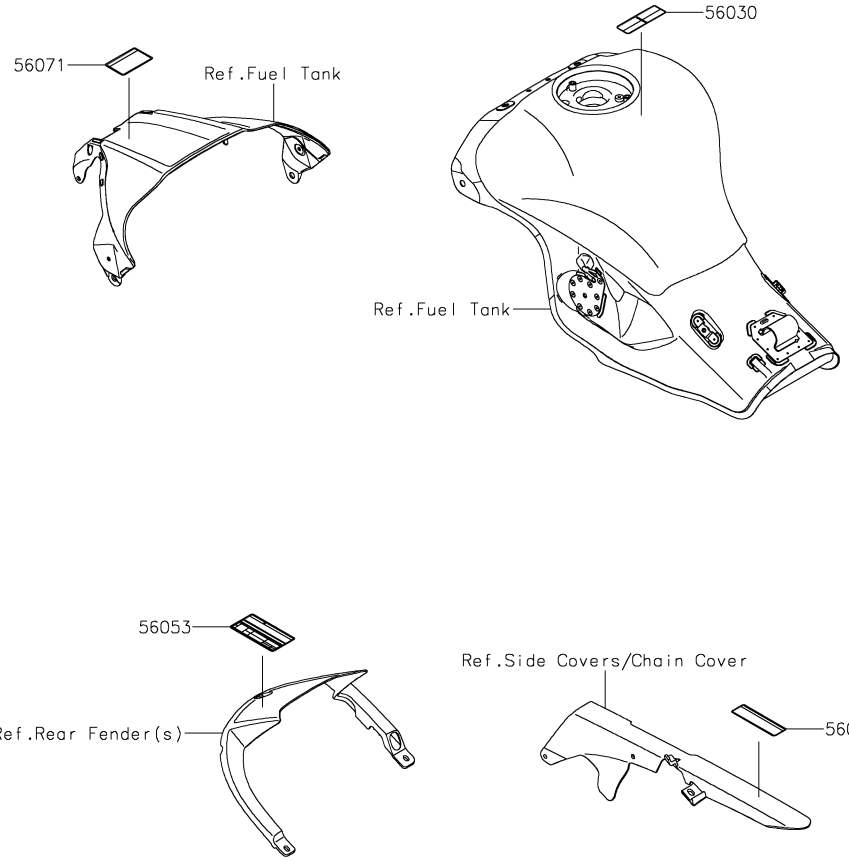

Ref. No.	Part No.	Description	Spec Code	Quantity-ZX1000 '16 SGF	'16 SGFA	'16 SGFB		
56030	56030-0359	LABEL,GASOLINE		1	1	1		
56033	56033-0927	LABEL-MANUAL,CHAIN		1	1	1		
56053	56053-0933	LABEL-SPECIFICATION,TIRE&LOAD		1	1	1		
56071	56071-0158	LABEL-WARNING,EVAPO		1	1	1		

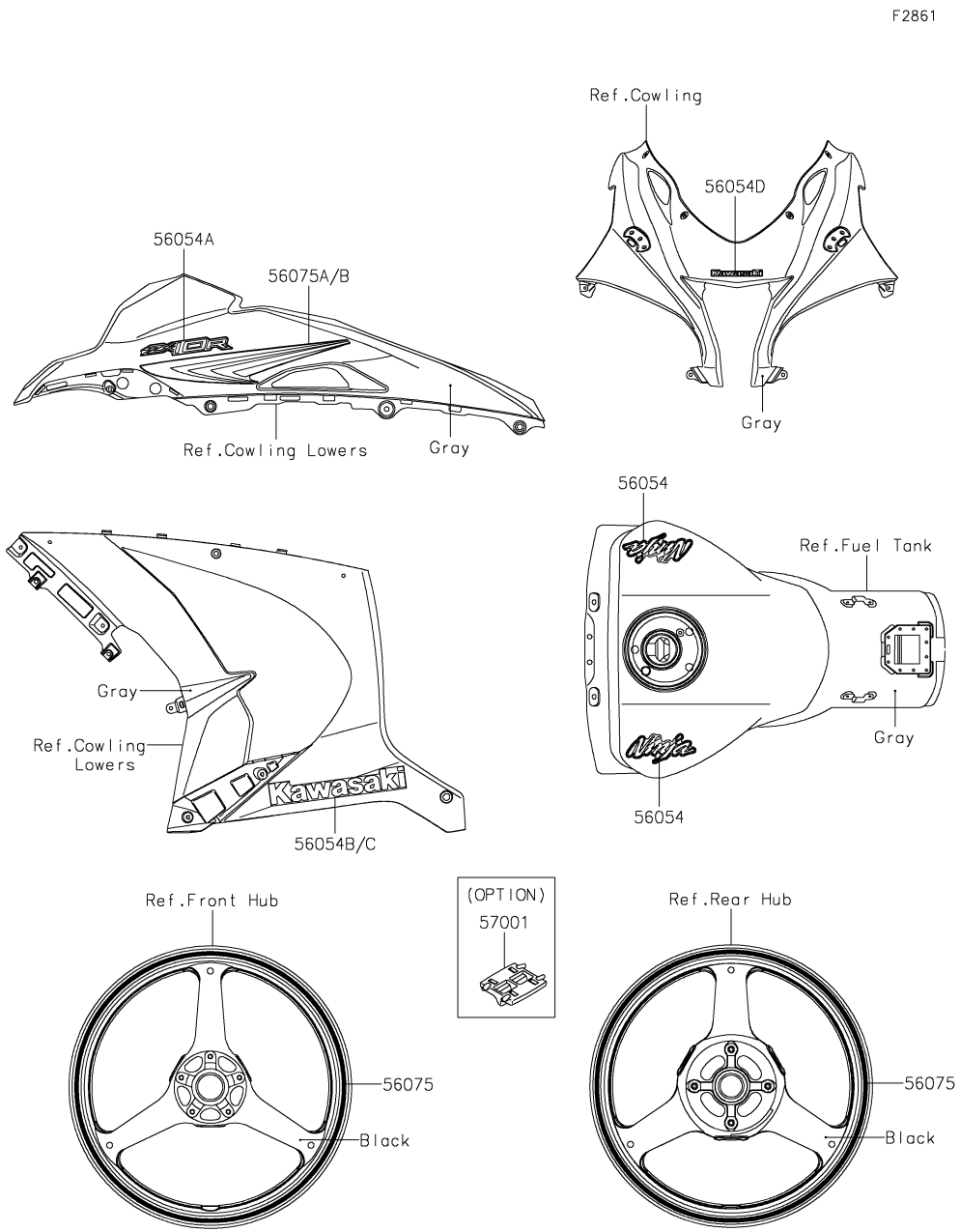

Ref. No.	Part No.	Description	Spec Code	Quantity-ZX1000				
				'16	'16	'16		
				SGF	SGFA	SGFB		
56054	56054-1903	MARK,FUEL TANK,NINJA		2				
56054A	56054-2003	MARK,SIDE COWL.,ZX10R		2				
56054B	56054-2004	MARK,LWR COWL.,LH,KAWASAKI		1				
56054C	56054-2005	MARK,LWR COWL.,RH,KAWASAKI		1				
56054D	56054-2047	MARK,UPP COWL.,KAWASAKI		1				
56075	56075-1464	PATTERN,WHEEL,GREEN,4X1353		4				
56075A	56075-1542	PATTERN,SIDE COWL.,LH		1				
56075B	56075-1543	PATTERN,SIDE COWL.,RH		1				
57001	57001-1752 (OPTION)	RIM STRIPE APPLICATOR		AR				

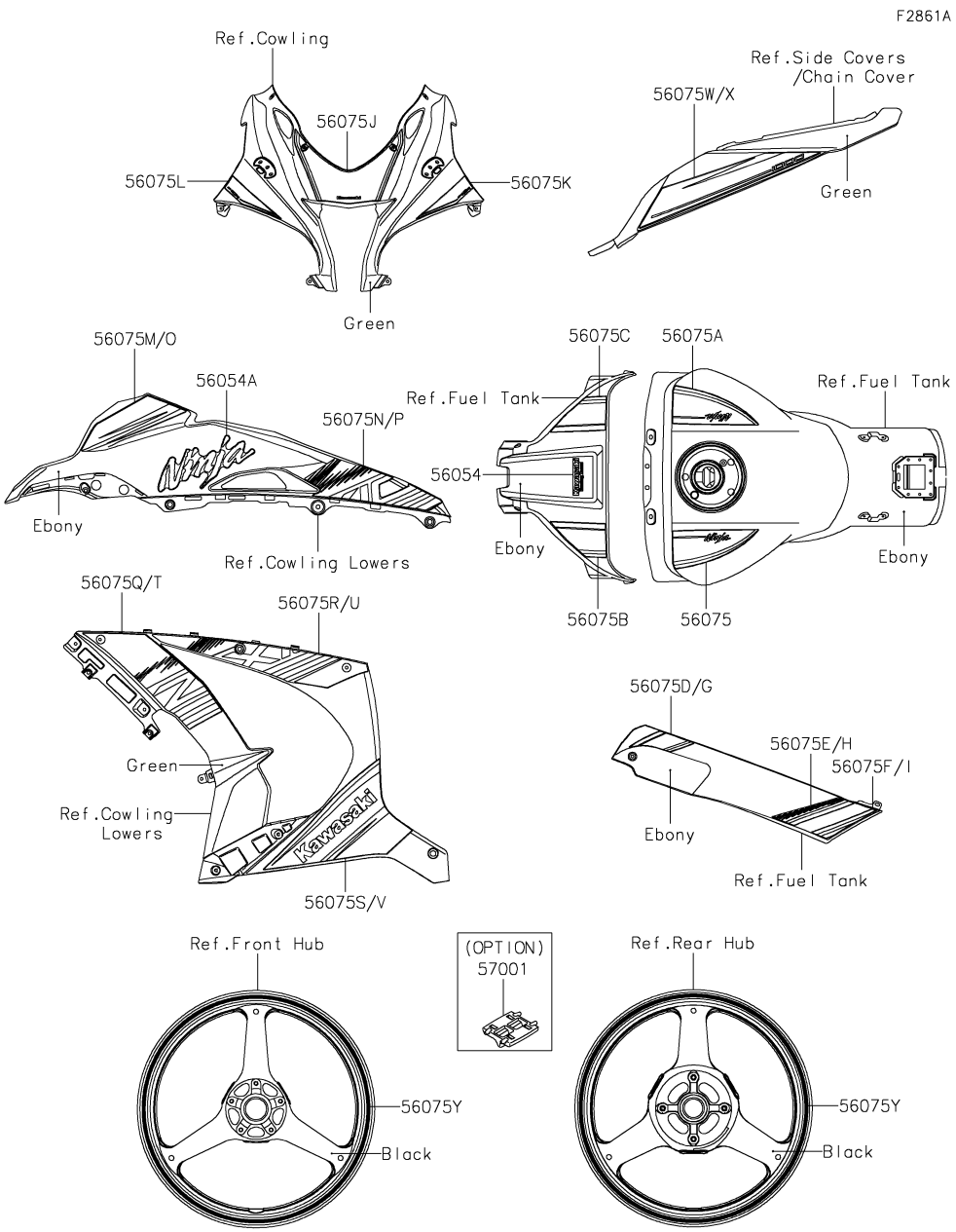

Ref. No.	Part No.	Description	Spec Code	Quantity-ZX1000 '16 SGF	'16 SGFA	'16 SGFB		
56054	56054-2006	MARK,TANK COVER,KAWASAKI RT		1				
56054A	56054-2008	MARK,SIDE COWL.,NINJA		2				
56075	56075-1550	PATTERN,FUEL TANK,LH		1				
56075A	56075-1551	PATTERN,FUEL TANK,RH		1				
56075B	56075-1552	PATTERN,TANK COVER,LH		1				
56075C	56075-1553	PATTERN,TANK COVER,RH		1				
56075D	56075-1554	PATTERN,TANK COVER,LH,UPP		1				
56075E	56075-1555	PATTERN,TANK COVER,LH,CNT		1				
56075F	56075-1556	PATTERN,TANK COVER,LH,LWR		1				
56075G	56075-1557	PATTERN,TANK COVER,RH,UPP		1				
56075H	56075-1558	PATTERN,TANK COVER,RH,CNT		1				
56075I	56075-1559	PATTERN,TANK COVER,RH,LWR		1				
56075J	56075-1560	PATTERN,UPP COWL.		1				
56075K	56075-1561	PATTERN,UPP COWL.,LH		1				
56075L	56075-1562	PATTERN,UPP COWL.,RH		1				
56075M	56075-1563	PATTERN,SIDE COWL.,LH,UPP		1				
56075N	56075-1564	PATTERN,SIDE COWL.,LH,LWR		1				
56075O	56075-1565	PATTERN,SIDE COWL.,RH,UPP		1				
56075P	56075-1566	PATTERN,SIDE COWL.,RH,LWR		1				
56075Q	56075-1567	PATTERN,LWR COWL.,LH,FR		1				
56075R	56075-1568	PATTERN,LWR COWL.,LH,RR		1				
56075S	56075-1569	PATTERN,LWR COWL.,LH,LWR		1				
56075T	56075-1570	PATTERN,LWR COWL.,RH,FR		1				
56075U	56075-1571	PATTERN,LWR COWL.,RH,RR		1				
56075V	56075-1572	PATTERN,LWR COWL.,RH,LWR		1				
56075W	56075-1573	PATTERN,TAIL COVER,LH		1				
56075X	56075-1574	PATTERN,TAIL COVER,RH		1				
56075Y	56075-1575	PATTERN,WHEEL,GREEN,6X1079		4				
57001	57001-1752 (OPTION)	RIM STRIPE APPLICATOR		AR				

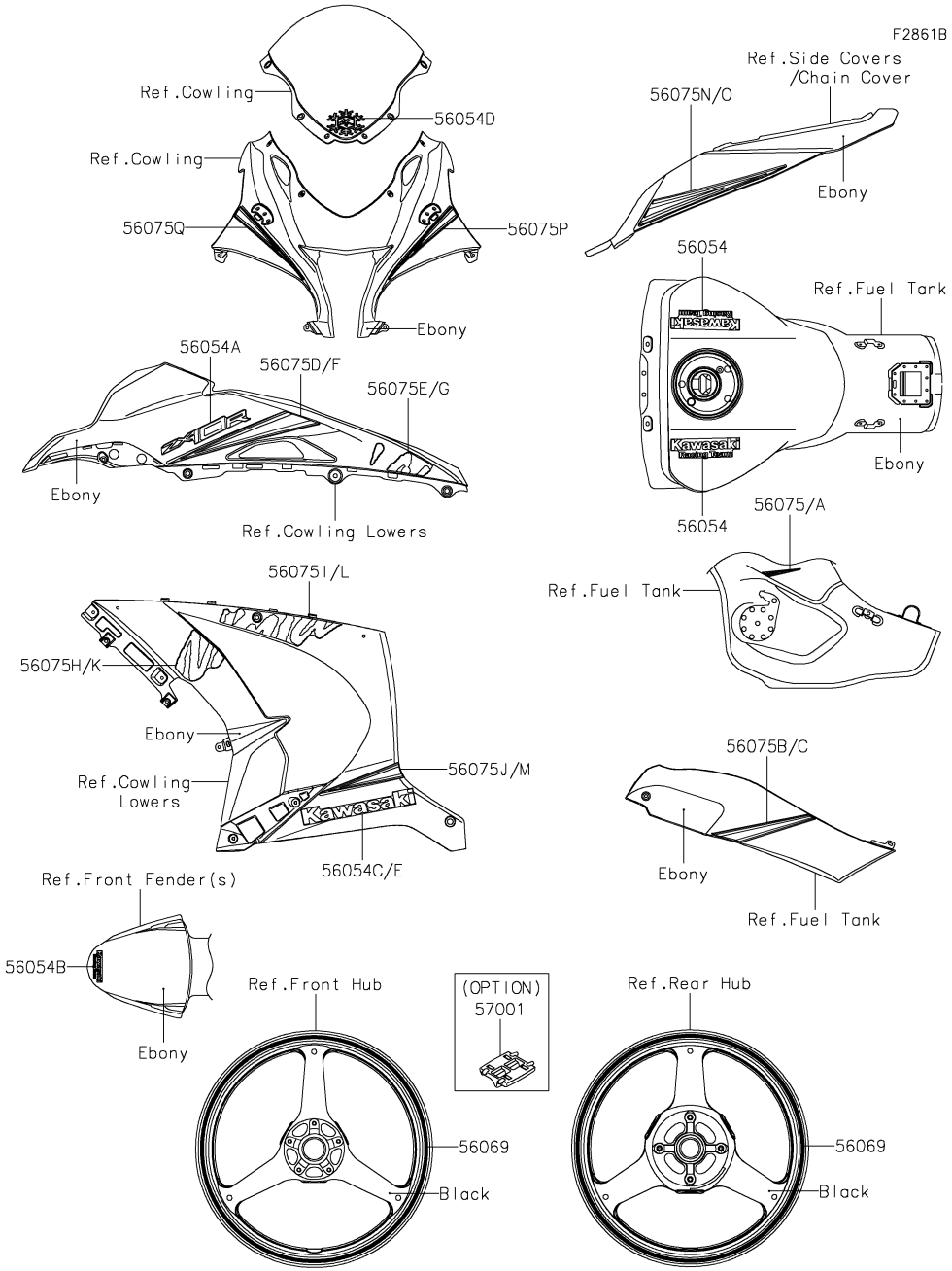

Ref. No.	Part No.	Description	Spec Code	Quantity-ZX1000 '16 SGF	'16 SGFA	'16 SGFB		
56054	56054-2009	MARK,FUEL TANK,KAWASAKI RT				2		
56054A	56054-2011	MARK,SIDE COWL.,ZX-10R				2		
56054B	56054-2012	MARK,FR FENDER,KAWASAKI RT				1		
56054C	56054-2013	MARK,LWR COWL.,LH,KAWASAKI				1		
56054D	56054-2014	MARK,WINDSHIELD,WINTER				1		
56054E	56054-2018	MARK,LWR COWL.,RH,KAWASAKI				1		
56069	56069-0103	PATTERN,WHEEL,GREEN,4X1353				4		
56075	56075-1576	PATTERN,FUEL TANK,LH				1		
56075A	56075-1577	PATTERN,FUEL TANK,RH				1		
56075B	56075-1578	PATTERN,TANK COVER,LH				1		
56075C	56075-1579	PATTERN,TANK COVER,RH				1		
56075D	56075-1580	PATTERN,SIDE COWL.,LH,UPP				1		
56075E	56075-1581	PATTERN,SIDE COWL.,LH,LWR				1		
56075F	56075-1582	PATTERN,SIDE COWL.,RH,UPP				1		
56075G	56075-1583	PATTERN,SIDE COWL.,RH,LWR				1		
56075H	56075-1584	PATTERN,LWR COWL.,LH,FR				1		
56075I	56075-1585	PATTERN,LWR COWL.,LH,RR				1		
56075J	56075-1586	PATTERN,LWR COWL.,LH,LWR				1		
56075K	56075-1587	PATTERN,LWR COWL.,RH,FR				1		
56075L	56075-1588	PATTERN,LWR COWL.,RH,RR				1		
56075M	56075-1589	PATTERN,LWR COWL.,RH,LWR				1		
56075N	56075-1590	PATTERN,TAIL COVER,LH				1		
56075O	56075-1591	PATTERN,TAIL COVER,RH				1		
56075P	56075-1598	PATTERN,UPP COWL.,LH				1		
56075Q	56075-1599	PATTERN,UPP COWL.,RH				1		
57001	57001-1752 (OPTION)	RIM STRIPE APPLICATOR				AR		

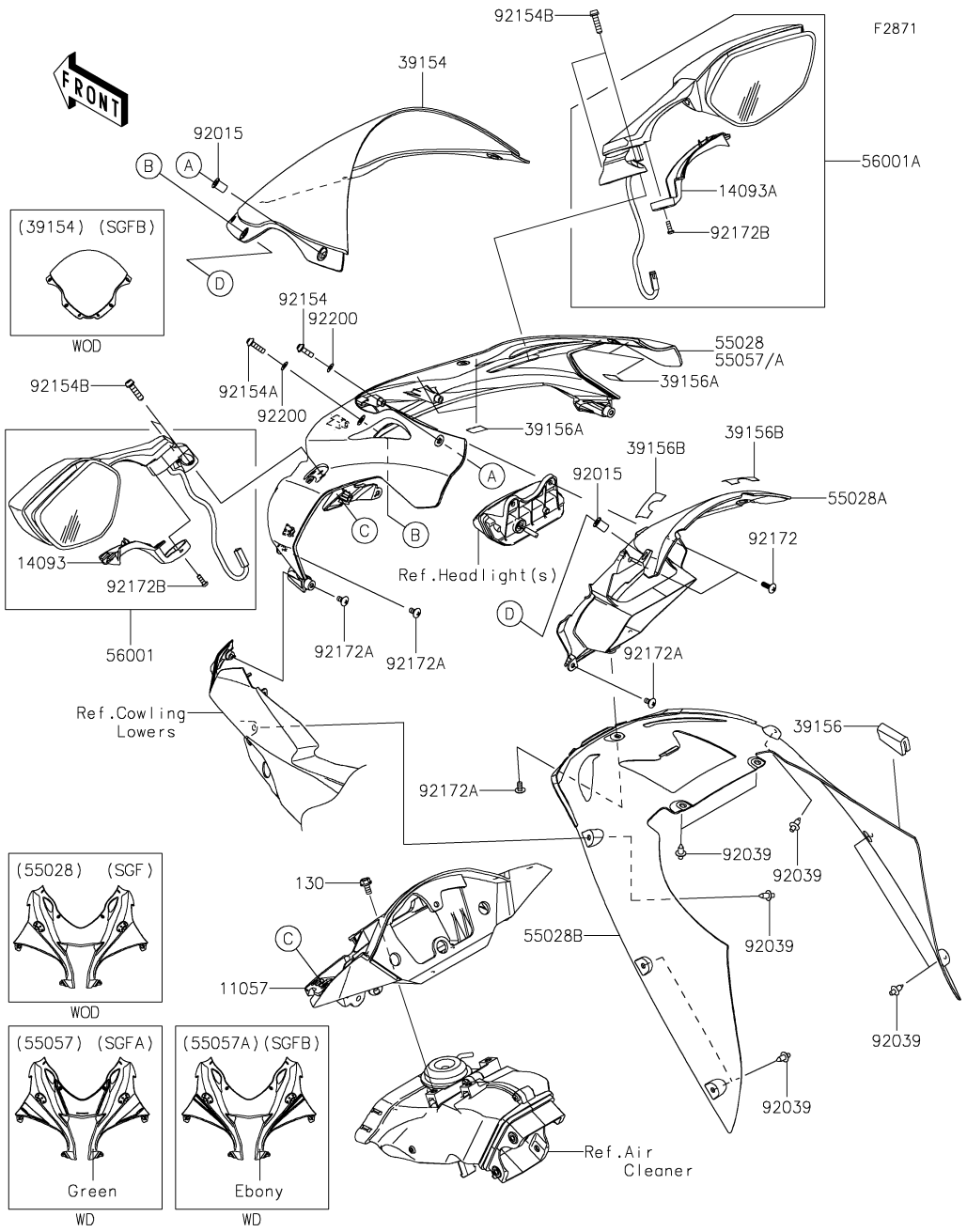

Ref. No.	Part No.	Description	Spec Code	Quantity-ZX1000 '16 SGF	'16 SGFA	'16 SGFB		
11057	11057-0072	BRACKET,METER		1	1	1		
14093	14093-0343	COVER,MIRROR,LH		1	1	1		
14093A	14093-0344	COVER,MIRROR,RH		1	1	1		
39154	39154-0351	WINDSHIELD		1	1	1		
39156	39156-0292	PAD		1	1	1		
39156A	39156-1784	PAD,15X20X0.2		8	8	8		
39156B	39156-2105	PAD		2	2	2		
55028	55028-0572-51B	COWLING,UPP,M.M.C.GRAY		1				
55028A	55028-0573	COWLING,RAM AIR		1	1	1		
55028B	55028-0578	COWLING,FR,CNT		1	1	1		
55057	55057-5096-777	COWLING,UPP,L.GREEN			1			
55057A	55057-5104-45L	COWLING,UPP,F.EBONY				1		
56001	56001-0322	MIRROR-ASSY,LH		1	1	1		
56001A	56001-0323	MIRROR-ASSY,RH		1	1	1		
92015	92015-1757	NUT,WELL,5MM		4	4	4		
92039	92039-0068	RIVET		8	8	8		
92154	92154-0209	BOLT,SOCKET,5X16		2	2	2		
92154A	92154-0210	BOLT,SOCKET,5X20		2	2	2		
92154B	92154-1724	BOLT,SOCKET,6X22		4	4	4		
92172	92172-0175	SCREW,TAPPING,5X16		2	2	2		
92172A	92172-0335	SCREW,TAPPING,5X10		7	7	7		
92172B	92172-0871	SCREW-PAN-CROS,4X10		2	2	2		
92200	92200-0006	WASHER,NYLONE,5.3X11.5X0.5		4	4	4		
130	130BA0612	BOLT-FLANGED,6X12		3	3	3		

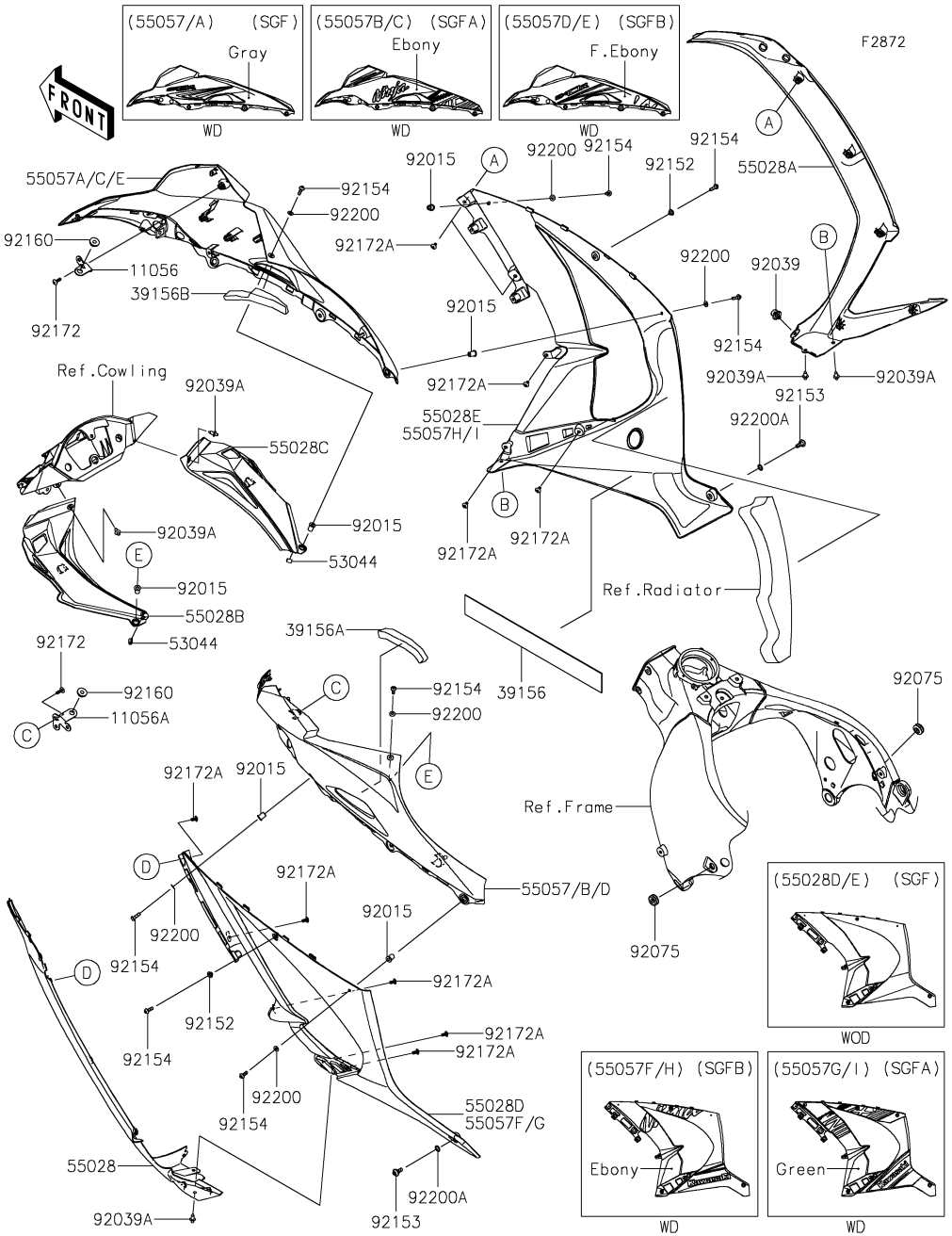

Ref. No.	Part No.	Description	Spec Code	Quantity-ZX1000 '16 SGF	'16 SGFA	'16 SGFB		
11056	11056-7813	BRACKET,INNER COWL.,RH		1	1	1		
11056A	11056-7814	BRACKET,INNER COWL.,LH		1	1	1		
39156	39156-0753	PAD,49X400X0.3		1	1	1		
39156A	39156-1972	PAD,SIDE COWL.,UPP,LH		1	1	1		
39156B	39156-1974	PAD,SIDE COWL.,UPP,RH		1	1	1		
53044	53044-0552	TRIM		2	2	2		
55028	55028-0336-6Z	COWLING,SIDE,FR,LH,F.BLACK		1	1	1		
55028A	55028-0337-6Z	COWLING,SIDE,FR,RH,F.BLACK		1	1	1		
55028B	55028-0576-6Z	COWLING,INNER,LH,F.BLACK		1	1	1		
55028C	55028-0577-6Z	COWLING,INNER,RH,F.BLACK		1	1	1		
55028D	55028-0585-51B	COWLING,SIDE,LH,M.M.C.GRAY		1				
55028E	55028-0586-51B	COWLING,SIDE,RH,M.M.C.GRAY		1				
55057	55057-5080-51B	COWLING,SIDE,UPP,LH,M.M.C.GRAY		1				
55057A	55057-5081-51B	COWLING,SIDE,UPP,RH,M.M.C.GRAY		1				
55057B	55057-5097-H8	COWLING,SIDE,UPP,LH,EBONY			1			
55057C	55057-5098-H8	COWLING,SIDE,UPP,RH,EBONY			1			
55057D	55057-5105-45L	COWLING,SIDE,UPP,LH,F.EBONY				1		
55057E	55057-5106-45L	COWLING,SIDE,UPP,RH,F.EBONY				1		
55057F	55057-5107-45L	COWLING,SIDE,LH,F.EBONY				1		
55057G	55057-5109-777	COWLING,SIDE,LH,L.GREEN			1			
55057H	55057-5110-45L	COWLING,SIDE,RH,F.EBONY				1		
55057I	55057-5112-777	COWLING,SIDE,RH,L.GREEN			1			
92015	92015-1757	NUT,WELL,5MM		6	6	6		
92039	92039-0014	RIVET,HOLE 8MM		1	1	1		
92039A	92039-0068	RIVET		5	5	5		
92075	92075-1067	DAMPER		2	2	2		
92152	92152-2190	COLLAR,5.3X7.3X5.3		2	2	2		
92153	92153-0489	BOLT,SOCKET,6MM		2	2	2		
92154	92154-0209	BOLT,SOCKET,5X16		8	8	8		
92160	92160-1613	DAMPER		2	2	2		
92172	92172-0175	SCREW,TAPPING,5X16		2	2	2		
92172A	92172-0335	SCREW,TAPPING,5X10		10	10	10		
92200	92200-0006	WASHER,NYLONE,5.3X11.5X0.5		6	6	6		
92200A	92200-0157	WASHER,10.4X15.9X0.5		2	2	2		

F2910

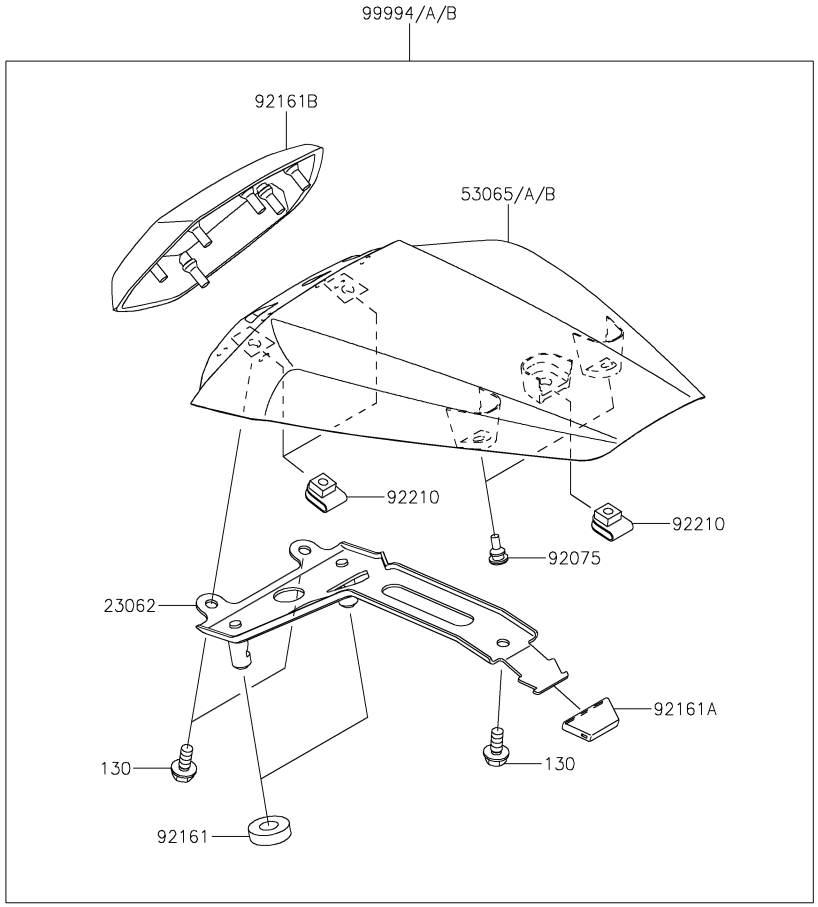

Ref. No.	Part No.	Description	Spec Code	Quantity-ZX1000 '16 SGF	'16 SGFA	'16 SGFB		
23062	23062-0861	BRACKET-COMP		1	1	1		
53065	53065-0038-45L	COVER SEAT,F.EBONY				1		
53065A	53065-0038-51B	COVER SEAT,M.M.C.GRAY		1				
53065B	53065-0038-777	COVER SEAT,L.GREEN			1			
92075	92075-1808	DAMPER,6X10X15		2	2	2		
92161	92161-0174	DAMPER		2	2	2		
92161A	92161-0629	DAMPER		1	1	1		
92161B	92161-1812	DAMPER,SEAT PAD		1	1	1		
92210	92210-0277	NUT,6MM		3	3	3		
99994	99994-0667-45L	KIT,SINGLE SEAT COVER,F.EBONY				1		
99994A	99994-0667-51B	KIT,SINGLE SEAT COVER,GRAY		1				
99994B	99994-0667-777	KIT,SINGLE SEAT COVER,L.GREEN			1			
130	130BA0614	BOLT-FLANGED,6X14		3	3	3		

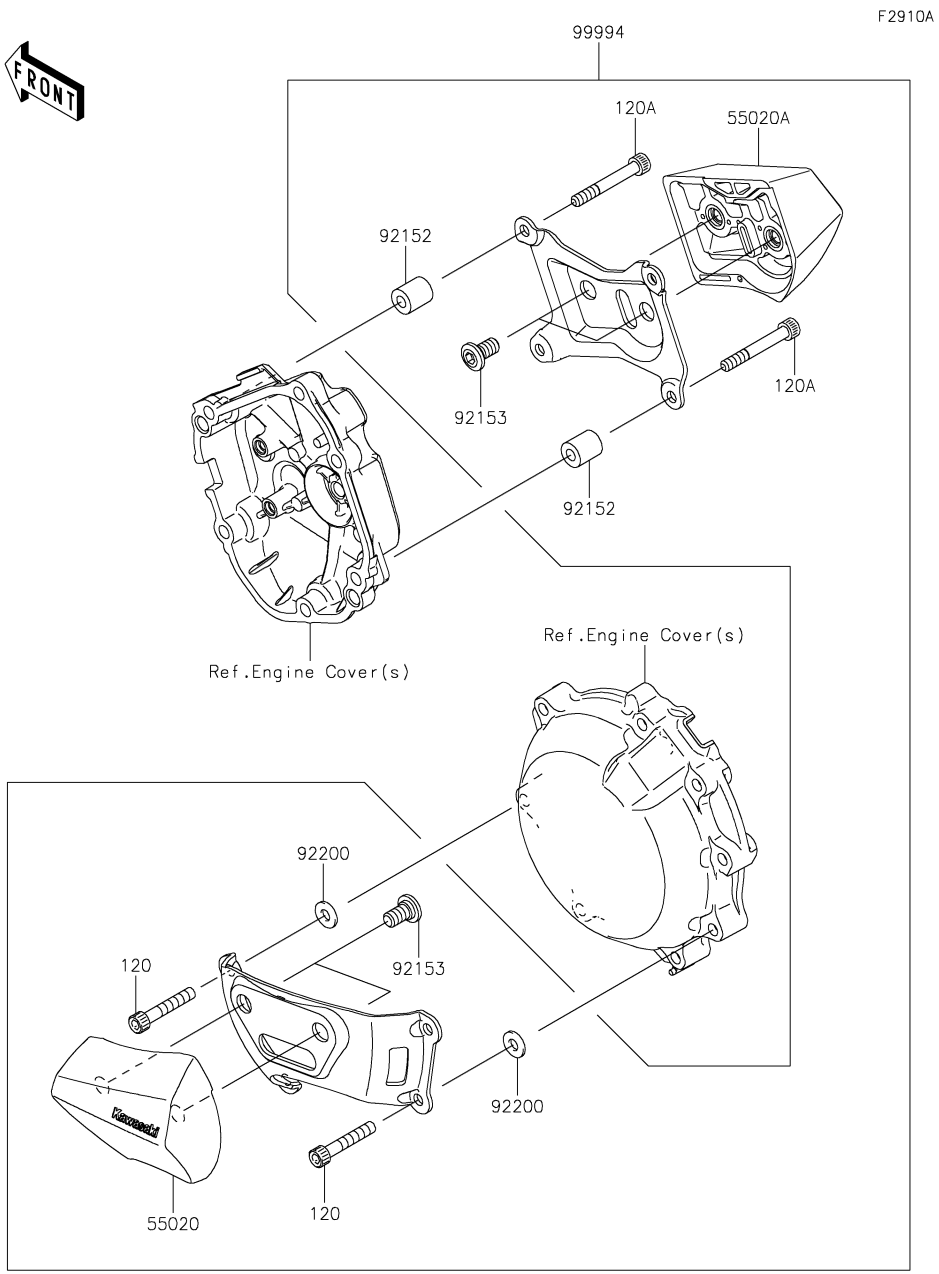

Ref. No.	Part No.	Description	Spec Code	Quantity-ZX1000 '16 SGF	'16 SGFA	'16 SGFB		
55020	55020-0595	GUARD,ENGINE,LH		1	1	1		
55020A	55020-0596	GUARD,ENGINE,RH		1	1	1		
92152	92152-0940	COLLAR,6.5X14X16		4	4	4		
92153	92153-1810	BOLT,SOCKET,8X15		4	4	4		
92200	92200-3775	WASHER,6.5X14.5X1.5		4	4	4		
99994	99994-0210	KIT-ACCESSORY,SLIDER		1	1	1		
120	120CC0635	BOLT-SOCKET,6X35		4	4	4		
120A	120CC0645	BOLT-SOCKET,6X45		4	4	4		

Part No.	Grid No.
11004-0759	B-3
11008-0869	B-3
11009-1145	D-9
11009-1238	D-6
11010-0844	B-5
11012-1084	D-9
11013-0757	B-5
11056-0173	F-11
11056-0189	C-6
11056-0237	G-12
11056-0238	G-12
11056-0242	F-13
11056-0325	F-4
11056-0326	F-4
11056-0327	F-4
11056-4496	G-12
11056-7023	F-5
11056-7024	F-7
11056-7677	E-10
11056-7685	F-11
11056-7697	C-14
11056-7706	G-10
11056-7717	G-10
11056-7726	F-4
11056-7751	C-14
11056-7782	F-13
11056-7786	F-7
11056-7809	G-10
11056-7812	D-4
11056-7813	H-7
11056-7814	H-7
11056-7816	G-10
11056-7828	G-10
11056-7844	C-11
11056-7955	G-10
11056-7959	G-10
11056-7960	F-7
11057-0017	G-10
11057-0072	H-6
11060-1203	B-7
11061-0107	D-3
11061-0262	C-8
11061-0435	C-6
11061-0436	B-4
11061-0437	B-4
11061-0441	C-9
11061-0442	C-9
11061-0444	B-5
11061-0445	B-5
11061-0447	B-7
11061-0448	B-7
11061-0735	C-9
11061-0746	G-7
11061-0747	C-10
11061-0999	B-11
11065-0095	E-5
11065-0360	B-4
11065-0737	D-7
11065-0958-10B	F-12
11065-0958-50Y	F-12
12004-0044	B-8
12005-0755	B-8
12009-0028	B-8
12009-0708	B-8
12011-1053	B-8
12021-0021	B-4
12026-0009	B-5
12032-0013	B-8
12032-0015	B-8
12046-0033	B-12
12046-0094	D-3
12046-0590	B-11
12048-0096	B-11
12053-0173	B-11
12053-0175	B-11
12053-0181	D-3
12053-0228	B-11
12053-0229	C-9
120CA0625	B-11
120CB0510	D-6
120CC0635	F-7
120CC0635	H-9
120CC0645	H-9
120CD0630	B-3
120Q0620	B-14
120R0522	C-13
13001-0774	B-12
13002-0004	B-12
13008-0562	B-12
13031-0833	B-12
13041-0047	B-13
13042-5009	F-10
13070-0126	F-9
13078-0012	C-5
13087-0010	B-14
13087-0011	B-14
13088-0003	B-14
13088-0013	B-14
13089-0008	B-14
13089-0009	B-14
13089-1093	B-14
13091-1624	F-10
13091-1840	B-14
13095-0582	B-14
130BA0518	F-4
130BA0610	F-4
130BA0612	B-6
130BA0612	F-14
130BA0612	G-11
130BA0612	H-6
130BA0614	D-7
130BA0614	D-9
130BA0614	G-11
130BA0614	H-8
130BA0616	F-4
130BA0616	F-7
130BA0620	F-11
130BA0622	G-3
130BA0625	F-4
130BA0675	F-14
130BB0608	F-4
130BB0625	G-7
130BD0610	C-7
130CA0612	F-4
130CB0625	F-4
13102-0049	B-14
13107-0157	B-11
13107-0230	D-3
13107-0231	D-6
13107-0837	D-6
13107-0838	D-3
13127-0671	C-3
13128-0670	C-3
13140-0064	C-4
13140-0065	C-4
13140-0650	C-4
13144-0004	C-3
13145-0051	C-4
13159-0009	F-7
13161-0078	C-5
13165-0018	C-5
13168-0831	B-13
13187-0006	B-14
13194-0553	D-6
13234-0589	B-13
13236-0192	C-5
13236-0195	F-3
13236-0769	C-5
13236-0770	F-5
13239-0041	C-4
13242-0128	C-5
13251-0725-HH	B-12
13262-1188	C-3
13262-1192	C-3
13262-1193	C-3
13262-1203	C-3
13262-1204	C-3
13262-1205	C-3
13262-1206	C-3
13262-1207	C-3
13262-1210	C-3
13262-1211	C-3
13272-0886	C-6
13272-0887	C-6
13272-0892	C-9
13272-1998	D-6
13272-2171	C-5
13280-0846	C-4
13280-0859	C-6
13280-1160	F-10
132BA0610	F-5
132BA0612	B-7
132BA0612	F-7
132BB0612	F-7
132BC0612	D-3
132BC0620	D-9
132BC0625	D-3
132BC0630	B-11
132BC0830	B-7
14001-0656	C-6
14014-0042	C-6
14014-0044	C-6
14014-0046	C-6
14014-0559	C-6
14014-0560	C-6
14026-0124	C-9
14031-0555	C-9
14032-0560	C-9
14037-0107	B-5
14044-0566	C-9
14073-0833	B-5
14073-0834	B-5
14073-0835	B-5
14073-0841	B-5
14079-0074	F-9
14092-0001	G-8
14092-0109	D-6
14092-0152	C-9
14092-0153	C-9
14092-0705	B-7
14092-0786-45L	F-13
14092-0786-51B	F-13
14092-0788-45L	F-13
14092-0788-51B	F-13
14092-0793	G-7
14093-0291	B-4
14093-0335	B-4
14093-0336	E-10
14093-0342-45L	F-13
14093-0342-51B	F-13
14093-0343	H-6
14093-0344	H-6
14093-0427	D-7
14093-0434	F-4
14093-0476	G-10
14093-5109-H8	F-13
14093-5110-H8	F-13
14093-5111-H8	F-13
16007-0003	B-8
16007-0044	B-8
16065-0115	B-3
16073-0053	D-6
16073-0129	B-5
16073-0848	C-11
16082-0757	F-4
16085-0144	B-13
16085-0650	D-6
16085-0651	D-6
16097-0011	D-3
16115-1009	C-9
16126-0038	B-5
16126-0057	B-5
16126-0705	C-14
16126-0735	E-13
16126-0735	E-14
16130-0005	D-3
16142-0734	D-3
16154-0708	D-3
16160-0226	D-3
16163-0863	C-11
16164-0009	C-14
16172-0023	B-5
18004-0019	B-7
18018-0600	B-7
18018-0601	B-7
18091-0970	B-7
180BA0614	F-3
21003-0107	D-4
21007-0019	D-5
21007-0166	F-6
21007-0167	F-9
21007-0591	D-4
21007-5068	G-12
21039-0004	D-6
21040-0003	D-6
21053-0007	D-3
21066-0748	D-4
21163-0064	D-6
21171-0741	D-5
21174-0009	B-7
21175-1118	C-13
21175-1155	F-11
21176-0009	C-13
21176-0026	C-13
21176-0048	C-13
21176-0111	C-11
21176-0789	C-13
21176-0811	C-5
21176-0813	F-5
21176-0815	F-7
21176-0819	C-13
21176-0820	C-4
21181-0010	G-12
220AA0510	C-11
220AB0525	F-10
220C0545	F-10
221AB0635	G-12
224AB0408	G-9
23007-0102	G-9
23007-0103	G-9
23007-0203	G-7
23016-0045	G-7
23016-0561	G-8
23025-0332	G-8
23026-0023	G-8
23037-0145	G-9
23037-0146	G-9
23062-0861	H-8
23062-0873	G-10
236AB0410	F-10
25009-004	G-8
25031-0659	G-4
26006-0001	D-6
26006-0001	G-10
26006-0020	G-10
26006-1078	G-10
26006-1080	D-6
26006-1080	G-10
26011-0308	D-6
26011-0913	G-10

Part No.	Grid No.
26011-0943	G-10
26012-0564	G-10
26031-2115	G-10
27002-0027	G-10
27002-1086	G-10
27002-1097	G-10
27003-0113	G-10
27005-0620	G-12
27008-0065	G-12
27010-0003	G-12
27010-0773	D-6
27010-0827	F-10
27010-0831	F-5
27010-0836	G-12
27010-1313	C-6
27012-0170	F-13
27012-0171	F-13
27016-0035	G-12
27016-5391	G-12
27048-5105	G-12
28012-0002	G-12
28012-1077	G-12
290Q0506	E-3
31064-0686	C-11
32033-1535	D-3
32037-0149	E-5
32043-0604-18R	E-11
32052-0154	F-13
32085-0047	E-8
32099-0766	F-10
32160-0506-18R	E-3
32160-0507-18R	E-3
32160-0800	E-3
32160-0801	E-3
33001-0648	E-6
33032-0048	E-6
33040-0027	E-6
33040-1114	E-6
34024-0137-18R	E-11
34028-0094	E-8
34028-0095	E-8
34028-0139	E-8
34028-0140	E-8
35004-0342-45L	E-9
35004-0342-51B	E-9
35004-0342-777	E-9
35019-0616	E-10
35023-0188	E-10
35023-0411	E-10
35063-0697-18R	E-5
35063-0700-18R	E-5
35063-0701	D-7
35063-0852-18R	E-5
35063-1331-18R	E-5
36001-0640-45L	G-6
36001-0640-51B	G-6
36001-0640-777	G-6
36001-0641-45L	G-6
36001-0641-51B	G-6
36001-0641-777	G-6
36014-0062	G-6
36041-0024-51B	G-6
36041-5113-777	G-6
36041-5116-45L	G-6
39007-0395	E-7
39045-0041	B-5
39061-0566	D-7
39062-0347	D-9
39062-0629	D-9
39062-0729	D-9
39062-0734	D-9
39062-0735	D-9
39062-0736	D-9
39062-0737	D-9
39062-0738	D-9
39062-0739	D-8
39062-0740	D-8
39067-0020	D-8
39076-0554	D-6
39085-0054	F-13
39111-0337	E-7
39111-0338	C-5
39130-1078	B-14
39130-1079	B-14
39154-0351	H-6
39156-0285	D-7
39156-0292	H-6
39156-0389	G-10
39156-0710	D-7
39156-0724	D-7
39156-0730	D-7
39156-0745	F-13
39156-0753	H-7
39156-0754	E-10
39156-0923	E-5
39156-1784	G-6
39156-1784	H-6
39156-1886	G-10
39156-1924	G-6
39156-1937	B-7
39156-1941	D-7
39156-1961	E-5
39156-1962	E-5
39156-1964	E-5
39156-1965	D-9
39156-1968	E-10
39156-1972	H-7
39156-1974	H-7
39156-1976	D-7
39156-1986	E-10
39156-1988	B-5
39156-1989	D-9
39156-1993	G-10
39156-2105	H-6
39156-2113	G-7
39156-2116	E-5
39178-0248	B-7
39192-0614	D-9
39192-0617	D-9
39192-0618	D-9
39193-0061	C-6
41009-0620	E-12
41009-0621	E-12
41068-0594	E-13
41068-0613	E-14
41073-0677-18F	E-13
41073-0688-18F	E-14
41075-0007	E-12
41075-0008	E-12
41075-0009	E-12
41080-0648-18U	F-6
41080-0662	F-9
410AA0800	F-11
411S0600	C-13
42033-0038	E-14
42036-0075	E-7
42036-0789	E-7
42036-1279	E-14
42036-1341	E-6
42041-0096	E-14
43010-0016	F-7
43015-0640	F-7
43015-0642	F-5
43020-1057	F-7
43026-0009	F-7
43027-1053	F-7
43028-1065	F-7
43034-0121	F-5
43048-0018	F-9
43056-0012	F-5
43056-0015	F-6
43056-1055	F-9
43057-1001	F-9
43060-0095	F-7
43060-0328	F-7
43078-0575	F-7
43078-0577	F-5
43078-0581	D-9
43080-0097-DJ	F-9
43080-0172-51J	F-6
43080-0173-51J	F-6
43082-0115	F-9
43082-0157	F-6
43095-0585	F-7
43095-0908	F-5
43095-0917	F-4
43095-0919	F-4
43095-0923	F-4
43095-0924	F-4
43095-0928	F-7
43095-0936	F-7
44008-0082-11G	F-12
44008-0082-499	F-12
44013-0284-58X	F-12
44013-0284-58Y	F-12
44013-0285-58X	F-12
44013-0285-58Y	F-12
44026-0202	F-12
44037-0159	F-12
44039-0156	F-12
44065-0026	F-12
44071-0857	F-11
44071-1207-58S	F-12
44071-1207-58T	F-12
44071-1208-58S	F-12
44071-1208-58T	F-12
45014-0515-52G	E-7
45014-0515-52J	E-7
46003-0657	F-10
46003-0658	F-10
46019-0020	F-10
46075-0068	F-10
46076-0117	F-10
46091-0322	F-10
46091-0323	F-10
46092-0565	F-10
46102-0609	B-14
461DB0500	D-6
480J1100	D-3
480J1400	C-5
481J5500	E-14
482EA5000	E-8
482EA7000	E-8
49002-0009	B-3
49006-1088	F-9
49006-1242	F-9
49016-0633	D-7
49016-0637	D-7
49018-0005	G-10
49018-0007	G-10
49033-0027	B-5
49033-0027	C-11
49034-0564	C-10
49040-0750	C-12
49047-0623	C-4
49054-0004	D-9
49056-0032	B-5
49056-0046	C-11
49063-1055	D-3
49065-0042	D-3
49078-0729	B-8
49078-0730	B-8
49085-1078	D-7
49091-0001	F-4
49091-0001	F-7
49116-0031	B-5
49118-0860	B-11
49118-0869	B-11
51044-0118	C-12
51044-0120	C-11
51049-0721	F-13
51089-5418-51B	F-13
51089-5419-H8	F-13
51089-5421-45L	F-13
52005-1120	C-6
53003-0209-MA	G-3
53003-0420-MA	G-3
53044-0018	G-10
53044-0552	H-7
53044-1276	F-13
53044-1296	F-13
53065-0038-45L	H-8
53065-0038-51B	H-8
53065-0038-777	H-8
53066-0506-12Y	G-3
53066-0521-MA	G-3
54010-0609	G-5
54010-0610	B-7
54010-0611	B-7
54011-0612	G-5
54012-0631	G-5
55020-0561	E-6
55020-0569	E-5
55020-0595	H-9
55020-0596	H-9
55020-1944	E-5
55028-0336-6Z	H-7
55028-0337-6Z	H-7
55028-0572-51B	H-6
55028-0573	H-6
55028-0576-6Z	H-7
55028-0577-6Z	H-7
55028-0578	H-6
55028-0585-51B	H-7
55028-0586-51B	H-7
55057-5080-51B	H-7
55057-5081-51B	H-7
55057-5096-777	H-6
55057-5097-H8	H-7
55057-5098-H8	H-7
55057-5104-45L	H-6
55057-5105-45L	H-7
55057-5106-45L	H-7
55057-5107-45L	H-7
55057-5109-777	H-7
55057-5110-45L	H-7
55057-5112-777	H-7
550AA2015	E-11
550AA2015	F-8
550AA4045	E-14
551A0408	D-3
551R0408	E-3
56001-0322	H-6
56001-0323	H-6
56007-0141	G-13
56008-1075	G-13
56030-0359	G-14
56030-0955	G-10
56030-0956	G-10
56033-0927	G-14
56053-0933	G-14
56054-1903	H-3
56054-1981	G-12
56054-2003	H-3
56054-2004	H-3
56054-2005	H-3
56054-2006	H-4
56054-2008	H-4
56054-2009	H-5
56054-2011	H-5

Part No.	Grid No.
56054-2012	H-5
56054-2013	H-5
56054-2014	H-5
56054-2018	H-5
56054-2047	H-3
56069-0103	H-5
56071-0158	G-14
56075-1464	H-3
56075-1542	H-3
56075-1543	H-3
56075-1550	H-4
56075-1551	H-4
56075-1552	H-4
56075-1553	H-4
56075-1554	H-4
56075-1555	H-4
56075-1556	H-4
56075-1557	H-4
56075-1558	H-4
56075-1559	H-4
56075-1560	H-4
56075-1561	H-4
56075-1562	H-4
56075-1563	H-4
56075-1564	H-4
56075-1565	H-4
56075-1566	H-4
56075-1567	H-4
56075-1568	H-4
56075-1569	H-4
56075-1570	H-4
56075-1571	H-4
56075-1572	H-4
56075-1573	H-4
56075-1574	H-4
56075-1575	H-4
56075-1576	H-5
56075-1577	H-5
56075-1578	H-5
56075-1579	H-5
56075-1580	H-5
56075-1581	H-5
56075-1582	H-5
56075-1583	H-5
56075-1584	H-5
56075-1585	H-5
56075-1586	H-5
56075-1587	H-5
56075-1588	H-5
56075-1589	H-5
56075-1590	H-5
56075-1591	H-5
56075-1598	H-5
56075-1599	H-5
57001-1752	H-3
57001-1752	H-4
57001-1752	H-5
59026-0044	D-5
59071-0022	C-11
59091-0007	B-7
59256-0011	D-3
59502-0606	D-7
600A0500	C-3
600A0800	E-8
601B6006G	E-14
610A0406	C-4
670B5055	E-5
670D1509	B-11
670D2010	B-11
670D2014	D-6
670D2018	C-4
670D2018	C-7
670E1508	B-6
671B2525	D-9
671B2560	E-14
702A06660	F-14
92001-1774	G-7
92002-1154	D-3
92004-0028	E-14
92004-0049	B-3
92005-0032	C-14
92005-0122	D-9
92005-0125	B-5
92005-0126	C-6
92005-0721	C-14
92005-0818	D-9
92005-0826	D-9
92005-0837	D-9
92005-1238	C-6
92005-1380	C-11
92009-1158	G-9
92009-1481	B-7
92009-1984	C-13
92015-1311	B-12
92015-1316	E-5
92015-1367	C-14
92015-1367	D-4
92015-1367	F-13
92015-1367	G-10
92015-1476	D-6
92015-1487	D-7
92015-1692	F-13
92015-1692	G-7
92015-1757	F-13
92015-1757	F-4
92015-1757	G-6
92015-1757	H-6
92015-1757	H-7
92022-077	D-3
92022-1523	C-6
92022-1523	D-8
92022-1827	C-5
92022-183	F-13
92022-272	C-5
92022-304	C-6
92022-311	D-3
92022-326	F-3
92022-3730	B-7
92026-0082	B-13
92026-0157	D-6
92026-0158	D-6
92026-0164	B-14
92026-0165	F-12
92026-0813	E-5
92027-1045	G-12
92027-1651	F-4
92033-0079	F-7
92033-1037	C-3
92033-1041	E-6
92033-1054	B-12
92033-1186	F-7
92033-1222	F-12
92033-1249	C-3
92033-1305	C-6
92033-3731	D-6
92037-010	F-13
92037-1124	C-11
92037-1271	C-14
92037-1290	D-4
92037-147	B-5
92037-147	D-9
92037-1539	C-4
92037-1903	G-10
92039-0014	H-7
92039-0068	C-14
92039-0068	G-6
92039-0068	H-6
92039-0068	H-7
92039-0752	E-9
92039-1289	E-10
92042-007	B-3
92042-007	C-9
92042-014	D-3
92042-030	D-3
92042-044	C-9
92043-0062	B-11
92043-0104	F-7
92043-0106	F-9
92043-0877	E-8
92043-1264	B-3
92043-1506	C-6
92043-1508	F-9
92043-1567	C-6
92043-1595	E-8
92043-1676	C-5
92043-4009	B-4
92043-4009	C-6
92045-0017	E-6
92045-0047	C-3
92045-0048	C-3
92045-0156	C-3
92045-0803	E-13
92045-0804	E-14
92045-1045	C-4
92045-1053	B-14
92045-1152	C-4
92045-1189	C-3
92045-1384	E-3
92046-0008	E-6
92046-0034	C-9
92046-0041	B-14
92046-0043	C-6
92046-0624	D-6
92046-1266	B-13
92046-1273	E-7
92046-1301	E-7
92049-0022	E-3
92049-0050	E-13
92049-0064	F-12
92049-0068	C-6
92049-0720	B-13
92049-0722	E-14
92049-0742	E-3
92049-0778	D-3
92049-0792	E-7
92049-1223	E-7
92049-1314	E-6
92049-1331	F-9
92049-1349	B-8
92049-1352	E-6
92049-1376	E-14
92049-1475	C-9
92049-1520	C-6
92055-0016	C-13
92055-0021	D-9
92055-0124	B-5
92055-0124	C-11
92055-0136	D-6
92055-0187	B-4
92055-0208	D-3
92055-0209	D-9
92055-0210	C-12
92055-0211	C-6
92055-049	C-9
92055-0739	D-8
92055-0741	F-7
92055-0761	C-11
92055-0831	D-9
92055-0840	C-11
92055-091	C-4
92055-1276	D-6
92055-1293	C-3
92055-1370	D-6
92055-1497	F-12
92055-1503	D-3
92055-1520	D-3
92055-1600	B-3
92057-0202	B-11
92057-0672	E-14
92057-0674	D-3
92058-0041	E-14
92062-0004	C-6
92062-0010	C-6
92062-0012	C-6
92062-0020	C-6
92062-0021	C-6
92062-1081	C-6
92065-097	C-10
92066-0079	C-10
92066-0832	B-3
92066-0837	D-6
92066-0839	C-6
92066-1012	C-6
92066-1013	C-6
92066-1110	C-6
92066-1211	B-5
92066-1320	E-5
92069-0020	G-9
92069-0053	G-7
92069-1016	G-8
92070-0047	D-5
92071-0024	D-6
92071-1043	F-13
92071-1143	F-4
92071-1187	D-4
92071-1270	B-7
92072-0782	G-10
92072-1306	E-5
92072-3768	F-4
92075-1011	F-4
92075-1028	F-5
92075-1067	H-7
92075-1123	D-7
92075-1426	E-7
92075-1564	G-12
92075-1808	G-4
92075-1808	H-8
92075-1912	C-13
92075-1982	F-13
92075-277	F-4
92081-1737	F-7
92092-1087	B-7
92093-0042	F-12
92093-0175	B-5
92093-0176	B-5
92093-0177	B-5
92093-0178	B-5
92093-0686	B-5
92093-0693	B-5
92093-1030	F-13
92093-1272	F-9
92104-0004	G-13
92104-1063	G-13
92104-1064	G-13
92104-2068	G-13
92106-1001	G-13
92107-1051	G-13
92110-1015	G-13
92110-1152	G-13
92110-1161	G-13
92110-3703	G-13
92111-1051	G-13
92112-1001	G-13
92127-003	G-13
92139-0036	C-3
92139-0038	C-3
92139-0298	B-12
92139-0299	B-12
92139-0300	B-12
92139-0301	B-12

Part No.	Grid No.
92139-0302	B-12
92139-0303	B-12
92139-0304	B-14
92139-0309	C-3
92139-0324	C-3
92139-0734	C-3
92139-0853	B-12
92139-0854	B-12
92139-0855	B-12
92143-1331	B-4
92144-1674	C-11
92144-1854	B-14
92145-0091	G-12
92145-0220	B-14
92145-0325	B-14
92145-0780	E-8
92145-0810	F-9
92145-0826	F-3
92145-0849	C-5
92145-1286	F-10
92145-1319	E-8
92145-1490	C-5
92145-1683	F-5
92145-1684	F-6
92145-1731	E-11
92145-1734	C-5
92150-1090	F-10
92150-1186	D-7
92150-1673	C-5
92150-1692	F-9
92150-1837	F-7
92151-1223	C-8
92151-1225	D-7
92151-1521	C-8
92151-1523	F-10
92151-1532	B-7
92151-1539	C-8
92151-1611	F-7
92151-1791	C-8
92151-1930	B-13
92151-1930	D-6
92152-0076	E-4
92152-0103	F-10
92152-0154	E-6
92152-0188	B-7
92152-0240	E-13
92152-0289	E-14
92152-0365	G-3
92152-0413	B-11
92152-0616	E-13
92152-0860	E-4
92152-0865	D-3
92152-0866	B-14
92152-0867	E-14
92152-0868	E-14
92152-0870	D-6
92152-0885	C-3
92152-0940	H-9
92152-0984	E-4
92152-1074	D-7
92152-1182	F-13
92152-1414	C-5
92152-1414	D-9
92152-1947	E-13
92152-1969	C-13
92152-2110	F-5
92152-2146	F-11
92152-2151	F-5
92152-2152	E-10
92152-2165	E-3
92152-2168	E-3
92152-2169	E-6
92152-2170	E-3
92152-2171	E-11
92152-2180	B-7
92152-2188	F-7
92152-2190	H-7
92152-2197	B-5
92152-2200	F-13
92152-2238	F-12
92152-2239	F-12
92153-0361	B-5
92153-0447	C-8
92153-0454	B-3
92153-0455	B-11
92153-0489	H-7
92153-0549	D-5
92153-0656	B-3
92153-0695	C-9
92153-0797	B-14
92153-0809	B-12
92153-0853	F-12
92153-0854	F-12
92153-0893	B-3
92153-0912	F-5
92153-1110	C-8
92153-1329	E-4
92153-1380	B-11
92153-1449	C-8
92153-1526	F-13
92153-1527	B-7
92153-1545	E-7
92153-1569	C-10
92153-1569	C-9
92153-1574	C-9
92153-1575	C-9
92153-1579	C-9
92153-1580	F-13
92153-1588	D-9
92153-1616	F-13
92153-1621	E-5
92153-1625	F-12
92153-1716	C-9
92153-1779	B-4
92153-1810	H-9
92153-1850	D-6
92153-1866	D-6
92153-1956	E-10
92154-0125	B-7
92154-0206	F-13
92154-0209	F-13
92154-0209	F-4
92154-0209	G-6
92154-0209	H-6
92154-0209	H-7
92154-0210	H-6
92154-0211	F-13
92154-0211	G-6
92154-0217	B-7
92154-0384	E-7
92154-0386	E-4
92154-0387	D-3
92154-0397	D-6
92154-0398	E-7
92154-0403	D-8
92154-0415	C-6
92154-0435	B-5
92154-0477	D-4
92154-0492	C-9
92154-0503	D-5
92154-0551	G-10
92154-0774	G-10
92154-0861	C-8
92154-0907	B-7
92154-1456	F-5
92154-1460	B-4
92154-1530	F-10
92154-1554	F-4
92154-1642	E-3
92154-1643	F-6
92154-1644	F-10
92154-1644	F-5
92154-1693	G-12
92154-1694	E-10
92154-1694	G-6
92154-1712	F-7
92154-1724	H-6
92154-1735	E-5
92154-1735	E-9
92154-1796	B-13
92154-1797	C-4
92154-1801	F-11
92154-1807	E-10
92154-1807	E-6
92154-1809	F-5
92154-1810	E-10
92154-1810	G-12
92154-1821	C-6
92154-1832	B-4
92154-1836	F-4
92154-1848	C-12
92154-1851	C-13
92154-1851	D-6
92154-1858	G-12
92154-1864	G-10
92154-1865	F-6
92154-1865	F-9
92154-1882	B-5
92154-1883	C-4
92154-1884	C-5
92154-1885	C-5
92154-1886	C-5
92154-1887	C-6
92154-1888	C-6
92154-1889	C-9
92154-1890	D-3
92154-1891	D-3
92154-1892	D-7
92154-1893	D-9
92154-1895	E-8
92154-1897	F-11
92154-1900	E-3
92154-1901	E-3
92154-1902	F-10
92154-1944	D-4
92154-1962	E-6
92154-1963	E-11
92154-1964	E-4
92154-1965	E-4
92154-1966	E-4
92154-1968	E-5
92154-1969	F-10
92154-1970	F-10
92154-1976	F-7
92154-1978	F-5
92154-2084	C-4
92154-2088	E-11
92154-2090	C-5
92154-2119	D-7
92160-1162	B-5
92160-1167	G-3
92160-1167	G-4
92160-1190	G-8
92160-1613	F-13
92160-1613	H-7
92161-0095	G-3
92161-0135	B-7
92161-0163	G-8
92161-0174	H-8
92161-0223	G-3
92161-0308	B-7
92161-0342	E-14
92161-0365	F-13
92161-0629	H-8
92161-0673	C-11
92161-0776	G-8
92161-0869	F-14
92161-0871	C-5
92161-0873	C-9
92161-0958	E-10
92161-0963	F-14
92161-0985	C-13
92161-1055	B-13
92161-1116	F-14
92161-1330	F-14
92161-1719	C-13
92161-1729	F-11
92161-1812	H-8
92161-1834	E-10
92161-1835	E-10
92161-1835	G-3
92161-1844	B-5
92161-1845	B-5
92161-1846	B-5
92170-1060	B-5
92170-1091	F-7
92170-1493	D-9
92170-1695	C-14
92170-1804	C-7
92170-1938	C-7
92171-0068	G-10
92171-0292	B-7
92171-0316	G-10
92171-0391	B-5
92171-0534	C-9
92171-0534	D-4
92171-0534	D-6
92171-0576	C-14
92171-0718	C-14
92171-0719	D-9
92171-0782	F-14
92171-0782	F-4
92171-0921	F-5
92171-0921	F-7
92171-0926	G-7
92171-0938	C-9
92171-1279	G-10
92171-1731	F-7
92172-0009	B-5
92172-0156	C-11
92172-0175	C-14
92172-0175	D-4
92172-0175	E-10
92172-0175	G-10
92172-0175	H-6
92172-0175	H-7
92172-0183	F-10
92172-0238	E-10
92172-0238	G-8
92172-0262	F-11
92172-0262	G-11
92172-0334	D-6
92172-0335	G-11
92172-0335	G-7
92172-0335	H-6
92172-0335	H-7
92172-0343	G-8
92172-0441	G-4
92172-0481	G-8
92172-0482	B-6
92172-0483	B-6
92172-0828	C-11
92172-0871	H-6
92172-0961	C-7
92172-1060	F-10
92173-0082	C-9
92173-0181	F-7
92173-0222	B-3
92173-0222	B-6
92173-0284	B-7

Part No.	Grid No.
92173-0736	C-11
92173-0736	G-11
92173-0742	G-11
92173-0786	F-4
92173-0791	G-11
92173-0831	C-12
92173-0832	C-12
92173-0861	G-11
92173-1009	G-11
92173-1023	F-11
92173-1229	G-11
92173-1360	D-9
92173-1361	D-8
92173-1481	E-9
92173-1493	E-9
92173-1498	F-5
92173-1507	F-5
92173-1508	F-5
92173-1516	F-7
92173-1517	F-7
92173-1518	F-7
92173-1520	F-7
92173-1526	C-5
92173-1528	B-7
92173-1548	D-9
92173-1549	C-13
92173-1552	D-8
92173-1555	C-10
92173-1568	C-11
92173-1578	D-7
92173-1580	D-8
92180-0108	B-8
92180-0109	B-8
92180-0110	B-8
92180-0865	B-8
92180-0866	B-8
92180-0867	B-8
92180-0868	B-8
92180-0869	B-8
92180-0870	B-8
92180-0871	B-8
92180-0872	B-8
92180-0873	B-8
92180-0874	B-8
92180-0875	B-8
92180-0876	B-8
92180-0877	B-8
92180-0878	B-8
92180-0879	B-8
92180-0880	B-8
92180-0881	B-8
92180-0882	B-8
92180-0883	B-8
92180-0884	B-8
92180-0885	B-8
92180-0886	B-8
92180-0887	B-8
92180-0888	B-8
92180-0889	B-8
92180-0890	B-9
92180-0891	B-9
92180-0892	B-9
92180-0893	B-9
92180-0894	B-9
92180-0895	B-9
92180-0896	B-9
92180-0897	B-9
92180-0898	B-9
92180-0899	B-9
92180-0900	B-9
92180-0901	B-9
92180-0902	B-9
92180-0903	B-9
92180-0904	B-9
92180-0905	B-9
92180-0906	B-9
92180-0907	B-9
92180-0908	B-9
92180-0909	B-9
92180-0910	B-9
92180-0911	B-9
92180-0912	B-9
92180-0913	B-9
92180-0914	B-9
92180-0915	B-9
92180-0916	B-9
92180-0917	B-9
92180-0918	B-9
92180-0919	B-9
92180-0920	B-9
92180-0921	B-9
92180-0922	B-9
92180-0923	B-9
92180-0924	B-9
92180-0925	B-9
92180-0926	B-9
92180-0927	B-9
92180-0928	B-9
92180-0929	B-9
92180-0930	B-10
92180-0931	B-10
92180-0932	B-10
92180-0933	B-10
92180-0934	B-10
92180-0935	B-10
92180-0936	B-10
92180-0937	B-10
92180-0938	B-10
92180-0939	B-10
92190-1185	F-3
92191-1001	E-11
92191-1550	C-11
92192-0887	B-6
92192-0889	B-6
92192-0892	B-6
92192-0985	C-7
92192-1119	B-6
92192-1234	C-11
92192-1349	C-11
92192-1494	C-11
92192-1497	C-11
92192-1499	C-11
92192-1502	C-14
92192-1503	C-14
92192-1504	C-14
92192-1505	C-14
92192-1506	C-14
92192-1521	C-11
92192-1612	C-11
92192-1616	C-11
92192-1617	C-11
92192-1618	C-11
92192-1619	B-6
92192-1644	B-6
92200-0006	G-6
92200-0006	H-6
92200-0006	H-7
92200-0036	E-3
92200-0043	E-8
92200-0047	C-8
92200-0050	C-3
92200-0078	B-7
92200-0114	B-3
92200-0115	C-8
92200-0138	C-3
92200-0157	H-7
92200-0212	G-12
92200-0265	C-5
92200-0278	E-14
92200-0279	F-3
92200-0293	F-11
92200-0328	E-11
92200-0369	D-4
92200-0386	D-6
92200-0424	B-12
92200-0595	E-3
92200-0807	E-5
92200-0810	C-5
92200-0811	C-5
92200-0812	C-5
92200-0854	G-9
92200-0855	G-9
92200-1087	B-6
92200-1260	B-14
92200-1377	B-7
92200-1388	E-9
92200-1487	B-14
92200-1522	C-3
92200-1523	C-3
92200-1564	C-11
92200-1720	C-3
92200-1762	E-10
92200-1762	E-6
92200-1762	G-6
92200-1771	D-3
92200-1834	E-10
92200-3775	H-9
92200-3807	C-11
92210-0006	F-10
92210-0007	G-12
92210-0076	B-7
92210-0095	E-3
92210-0121	B-7
92210-0130	G-7
92210-0134	E-6
92210-0152	B-14
92210-0188	D-6
92210-0277	H-8
92210-0280	E-14
92210-0320	E-6
92210-0368	B-6
92210-0823	E-3
92210-0850	C-3
92210-0950	C-13
92210-0991	F-5
92210-1100	C-5
92210-1101	C-5
92210-1139	E-14
92210-1139	E-4
92210-1139	E-7
92210-1390	E-4
92210-1424	F-5
92210-1441	E-3
92210-1459	E-6
92210-1460	E-3
92210-1506	F-12
99994-0210	H-9
99994-0667-45L	H-8
99994-0667-51B	H-8
99994-0667-777	H-8
99999-0521	C-12
99999-0557	F-6
99999-0558	F-6

Part Name Index

Accessory(Frame Slider) H-9
Accessory(Single Seat Cover) H-8
Air Cleaner B-5/B-6
Balancer B-13
Brake Pedal F-3
Brake Piping F-4
Cables G-5
Camshaft(s) B-11
Chain Cover G-6
Chassis Electrical Equipment G-10/G-11
Clutch B-14
Cowling H-6
Cowling Lowers H-7
Crankcase C-6/C-7
Crankcase Bolt Pattern C-8
Crankshaft B-12
Cylinder Head B-3
Cylinder Head Cover B-4
Decals(Ebony)(SGFB) H-5
Decals(Gray)(SGF) H-3
Decals(Green)(SGFA) H-4
Engine Cover(s) C-9
Engine Mount E-4
Footrests E-8
Frame E-3
Frame Fittings E-5
Front Brake F-6
Front Fender(s) E-9
Front Fork F-12
Front Hub E-13
Front Master Cylinder F-5
Fuel Evaporative System C-14
Fuel Injection C-13
Fuel Pump C-12
Fuel Tank F-13/F-14
Gear Change Drum C-4
Gear Change Mechanism C-5
Generator D-4
Handlebar F-10
Headlight(s) G-7
Ignition Switch G-12
Ignition System D-5
Labels G-14
Meter(s) G-4
Muffler(s) B-7
Oil Cooler D-8
Oil Pan C-10
Oil Pump D-3
Owner's Tools G-13
Piston(s) B-12
Radiator D-7
Rear Brake F-9
Rear Fender(s) E-10
Rear Hub E-14
Rear Master Cylinder F-7/F-8
Seat G-3
Shift Fork(s) C-4
Shock Absorber E-7
Side Covers G-6
Stand(s) E-11
Starter Motor D-6
Steering Damper F-11
Suspension E-7
Swingarm E-6
Taillight(s) G-8
Tensioner B-11
Throttle C-11
Tires E-12
Transmission C-3
Turn Signals G-9
Valve(s) B-10/B-8/B-9
Water Pipe D-9

Part Name Index

Accessory(Frame Slider) H-9
Accessory(Single Seat Cover) H-8
Air Cleaner B-5/B-6
Balancer B-13
Brake Pedal F-3
Brake Piping F-4
Cables G-5
Camshaft(s) B-11
Chain Cover G-6
Chassis Electrical Equipment G-10/G-11
Clutch B-14
Cowling H-6
Cowling Lowers H-7
Crankcase C-6/C-7
Crankcase Bolt Pattern C-8
Crankshaft B-12
Cylinder Head B-3
Cylinder Head Cover B-4
Decals(Ebony)(SGFB) H-5
Decals(Gray)(SGF) H-3
Decals(Green)(SGFA) H-4
Engine Cover(s) C-9
Engine Mount E-4
Footrests E-8
Frame E-3
Frame Fittings E-5
Front Brake F-6
Front Fender(s) E-9
Front Fork F-12
Front Hub E-13
Front Master Cylinder F-5
Fuel Evaporative System C-14
Fuel Injection C-13
Fuel Pump C-12
Fuel Tank F-13/F-14
Gear Change Drum C-4
Gear Change Mechanism C-5
Generator D-4
Handlebar F-10
Headlight(s) G-7
Ignition Switch G-12
Ignition System D-5
Labels G-14
Meter(s) G-4
Muffler(s) B-7
Oil Cooler D-8
Oil Pan C-10
Oil Pump D-3
Owner's Tools G-13
Piston(s) B-12
Radiator D-7
Rear Brake F-9
Rear Fender(s) E-10
Rear Hub E-14
Rear Master Cylinder F-7/F-8
Seat G-3
Shift Fork(s) C-4
Shock Absorber E-7
Side Covers G-6
Stand(s) E-11
Starter Motor D-6
Steering Damper F-11
Suspension E-7
Swingarm E-6
Taillight(s) G-8
Tensioner B-11
Throttle C-11
Tires E-12
Transmission C-3
Turn Signals G-9
Valve(s) B-10/B-8/B-9
Water Pipe D-9

Part Name Index

Accessory(Frame Slider) H-9
Accessory(Single Seat Cover) H-8
Air Cleaner B-5/B-6
Balancer B-13
Brake Pedal F-3
Brake Piping F-4
Cables G-5
Camshaft(s) B-11
Chain Cover G-6
Chassis Electrical Equipment G-10/G-11
Clutch B-14
Cowling H-6
Cowling Lowers H-7
Crankcase C-6/C-7
Crankcase Bolt Pattern C-8
Crankshaft B-12
Cylinder Head B-3
Cylinder Head Cover B-4
Decals(Ebony)(SGFB) H-5
Decals(Gray)(SGF) H-3
Decals(Green)(SGFA) H-4
Engine Cover(s) C-9
Engine Mount E-4
Footrests E-8
Frame E-3
Frame Fittings E-5
Front Brake F-6
Front Fender(s) E-9
Front Fork F-12
Front Hub E-13
Front Master Cylinder F-5
Fuel Evaporative System C-14
Fuel Injection C-13
Fuel Pump C-12
Fuel Tank F-13/F-14
Gear Change Drum C-4
Gear Change Mechanism C-5
Generator D-4
Handlebar F-10
Headlight(s) G-7
Ignition Switch G-12
Ignition System D-5
Labels G-14
Meter(s) G-4
Muffler(s) B-7
Oil Cooler D-8
Oil Pan C-10
Oil Pump D-3
Owner's Tools G-13
Piston(s) B-12
Radiator D-7
Rear Brake F-9
Rear Fender(s) E-10
Rear Hub E-14
Rear Master Cylinder F-7/F-8
Seat G-3
Shift Fork(s) C-4
Shock Absorber E-7
Side Covers G-6
Stand(s) E-11
Starter Motor D-6
Steering Damper F-11
Suspension E-7
Swingarm E-6
Taillight(s) G-8
Tensioner B-11
Throttle C-11
Tires E-12
Transmission C-3
Turn Signals G-9
Valve(s) B-10/B-8/B-9
Water Pipe D-9

Part Name Index

Accessory(Frame Slider) H-9
Accessory(Single Seat Cover) H-8
Air Cleaner B-5/B-6
Balancer B-13
Brake Pedal F-3
Brake Piping F-4
Cables G-5
Camshaft(s) B-11
Chain Cover G-6
Chassis Electrical Equipment G-10/G-11
Clutch B-14
Cowling H-6
Cowling Lowers H-7
Crankcase C-6/C-7
Crankcase Bolt Pattern C-8
Crankshaft B-12
Cylinder Head B-3
Cylinder Head Cover B-4
Decals(Ebony)(SGFB) H-5
Decals(Gray)(SGF) H-3
Decals(Green)(SGFA) H-4
Engine Cover(s) C-9
Engine Mount E-4
Footrests E-8
Frame E-3
Frame Fittings E-5
Front Brake F-6
Front Fender(s) E-9
Front Fork F-12
Front Hub E-13
Front Master Cylinder F-5
Fuel Evaporative System C-14
Fuel Injection C-13
Fuel Pump C-12
Fuel Tank F-13/F-14
Gear Change Drum C-4
Gear Change Mechanism C-5
Generator D-4
Handlebar F-10
Headlight(s) G-7
Ignition Switch G-12
Ignition System D-5
Labels G-14
Meter(s) G-4
Muffler(s) B-7
Oil Cooler D-8
Oil Pan C-10
Oil Pump D-3
Owner's Tools G-13
Piston(s) B-12
Radiator D-7
Rear Brake F-9
Rear Fender(s) E-10
Rear Hub E-14
Rear Master Cylinder F-7/F-8
Seat G-3
Shift Fork(s) C-4
Shock Absorber E-7
Side Covers G-6
Stand(s) E-11
Starter Motor D-6
Steering Damper F-11
Suspension E-7
Swingarm E-6
Taillight(s) G-8
Tensioner B-11
Throttle C-11
Tires E-12
Transmission C-3
Turn Signals G-9
Valve(s) B-10/B-8/B-9
Water Pipe D-9

Part Name Index

Accessory(Frame Slider) H-9
Accessory(Single Seat Cover) H-8
Air Cleaner B-5/B-6
Balancer B-13
Brake Pedal F-3
Brake Piping F-4
Cables G-5
Camshaft(s) B-11
Chain Cover G-6
Chassis Electrical Equipment G-10/G-11
Clutch B-14
Cowling H-6
Cowling Lowers H-7
Crankcase C-6/C-7
Crankcase Bolt Pattern C-8
Crankshaft B-12
Cylinder Head B-3
Cylinder Head Cover B-4
Decals(Ebony)(SGFB) H-5
Decals(Gray)(SGF) H-3
Decals(Green)(SGFA) H-4
Engine Cover(s) C-9
Engine Mount E-4
Footrests E-8
Frame E-3
Frame Fittings E-5
Front Brake F-6
Front Fender(s) E-9
Front Fork F-12
Front Hub E-13
Front Master Cylinder F-5
Fuel Evaporative System C-14
Fuel Injection C-13
Fuel Pump C-12
Fuel Tank F-13/F-14
Gear Change Drum C-4
Gear Change Mechanism C-5
Generator D-4
Handlebar F-10
Headlight(s) G-7
Ignition Switch G-12
Ignition System D-5
Labels G-14
Meter(s) G-4
Muffler(s) B-7
Oil Cooler D-8
Oil Pan C-10
Oil Pump D-3
Owner's Tools G-13
Piston(s) B-12
Radiator D-7
Rear Brake F-9
Rear Fender(s) E-10
Rear Hub E-14
Rear Master Cylinder F-7/F-8
Seat G-3
Shift Fork(s) C-4
Shock Absorber E-7
Side Covers G-6
Stand(s) E-11
Starter Motor D-6
Steering Damper F-11
Suspension E-7
Swingarm E-6
Taillight(s) G-8
Tensioner B-11
Throttle C-11
Tires E-12
Transmission C-3
Turn Signals G-9
Valve(s) B-10/B-8/B-9
Water Pipe D-9

Part Name Index

Accessory(Frame Slider) H-9
Accessory(Single Seat Cover) H-8
Air Cleaner B-5/B-6
Balancer B-13
Brake Pedal F-3
Brake Piping F-4
Cables G-5
Camshaft(s) B-11
Chain Cover G-6
Chassis Electrical Equipment G-10/G-11
Clutch B-14
Cowling H-6
Cowling Lowers H-7
Crankcase C-6/C-7
Crankcase Bolt Pattern C-8
Crankshaft B-12
Cylinder Head B-3
Cylinder Head Cover B-4
Decals(Ebony)(SGFB) H-5
Decals(Gray)(SGF) H-3
Decals(Green)(SGFA) H-4
Engine Cover(s) C-9
Engine Mount E-4
Footrests E-8
Frame E-3
Frame Fittings E-5
Front Brake F-6
Front Fender(s) E-9
Front Fork F-12
Front Hub E-13
Front Master Cylinder F-5
Fuel Evaporative System C-14
Fuel Injection C-13
Fuel Pump C-12
Fuel Tank F-13/F-14
Gear Change Drum C-4
Gear Change Mechanism C-5
Generator D-4
Handlebar F-10
Headlight(s) G-7
Ignition Switch G-12
Ignition System D-5
Labels G-14
Meter(s) G-4
Muffler(s) B-7
Oil Cooler D-8
Oil Pan C-10
Oil Pump D-3
Owner's Tools G-13
Piston(s) B-12
Radiator D-7
Rear Brake F-9
Rear Fender(s) E-10
Rear Hub E-14
Rear Master Cylinder F-7/F-8
Seat G-3
Shift Fork(s) C-4
Shock Absorber E-7
Side Covers G-6
Stand(s) E-11
Starter Motor D-6
Steering Damper F-11
Suspension E-7
Swingarm E-6
Taillight(s) G-8
Tensioner B-11
Throttle C-11
Tires E-12
Transmission C-3
Turn Signals G-9
Valve(s) B-10/B-8/B-9
Water Pipe D-9

Part Name Index

Accessory(Frame Slider) H-9
Accessory(Single Seat Cover) H-8
Air Cleaner B-5/B-6
Balancer B-13
Brake Pedal F-3
Brake Piping F-4
Cables G-5
Camshaft(s) B-11
Chain Cover G-6
Chassis Electrical Equipment G-10/G-11
Clutch B-14
Cowling H-6
Cowling Lowers H-7
Crankcase C-6/C-7
Crankcase Bolt Pattern C-8
Crankshaft B-12
Cylinder Head B-3
Cylinder Head Cover B-4
Decals(Ebony)(SGFB) H-5
Decals(Gray)(SGF) H-3
Decals(Green)(SGFA) H-4
Engine Cover(s) C-9
Engine Mount E-4
Footrests E-8
Frame E-3
Frame Fittings E-5
Front Brake F-6
Front Fender(s) E-9
Front Fork F-12
Front Hub E-13
Front Master Cylinder F-5
Fuel Evaporative System C-14
Fuel Injection C-13
Fuel Pump C-12
Fuel Tank F-13/F-14
Gear Change Drum C-4
Gear Change Mechanism C-5
Generator D-4
Handlebar F-10
Headlight(s) G-7
Ignition Switch G-12
Ignition System D-5
Labels G-14
Meter(s) G-4
Muffler(s) B-7
Oil Cooler D-8
Oil Pan C-10
Oil Pump D-3
Owner's Tools G-13
Piston(s) B-12
Radiator D-7
Rear Brake F-9
Rear Fender(s) E-10
Rear Hub E-14
Rear Master Cylinder F-7/F-8
Seat G-3
Shift Fork(s) C-4
Shock Absorber E-7
Side Covers G-6
Stand(s) E-11
Starter Motor D-6
Steering Damper F-11
Suspension E-7
Swingarm E-6
Taillight(s) G-8
Tensioner B-11
Throttle C-11
Tires E-12
Transmission C-3
Turn Signals G-9
Valve(s) B-10/B-8/B-9
Water Pipe D-9